DME MOLD BASES AND PLATES

MILACRON®

DME
Every step of the way

Table of Contents

Introduction

Terms and Conditions of Sale 4
Sales and Ordering Information 5
Mold and Die Steels 8
Mold Base Benefits 9
DME Item Number System 10
Mold Base Terminology 11
Machining of Clamp Slots 12

Mold Base and Plate Services

Edge Mold Bases 15-21
Edge Pre-Pocketed Mold Bases 22-23
Quick Delivery Standards 25-32
Quick Delivery Specials 33-35
Contour Roughing Services 36

American Standard Mold Bases

Key Features 40
Mold Base Series Selections 41
Standard Steel Types 42-43
Standard Features Overview 44-45
Optional Features Overview 46-47
Quote Request Form 48-49
Special Feature Location Form 50
Standard A-Series Mold Bases 52-137
B-Series Mold Bases 138

Standard and Optional Features 139-172
Locating Rings 146
Sprue Bushings 147
Upper & Lower Assembly Screws 148-149
Clamp Slots 150
Guide Pins and Bushings 151
Return Pins, Stop Pins and Sprue Puller Pins . . 152-153
Ejector Housing and Cover 154-155
Ejector Assembly Screws 156
Minimum Additional SHCS 157-158
Mold Base Features and Delivery Time 159
Self-Lubricating Bushings 160
Pry Slots 161
Guided Ejection Systems 162-163
Lifting Holes 164
Pockets 165
Support Pillars 166-167
Leader Pin Vents, Spring Pockets
and Mold Strap Holes 168
Waterlines 169
3-Plate Extension Bushings 170
Interlocks 171
Insulator Sheets 172

American Standard Mold Bases

X-, AX- and T-Series Mold Bases 173-198
Features 174-175
Stripper Plate Mold Bases 176-184
AX-Series 185
T-Series 186-196
3-Plate Extension Bushings 197
Ball Bushings for Floating Plates 198

Small and Shuttle Mold Bases 199-210
Small and Custom 200-205
Shuttle Mold Bases 206-209

MoldBasics Mold Bases 211-220
Features 212-215
Product Selection Tables 216-219
Polimold Industrial S.A. 220

Cavity Retainer Sets

Cavity Retainer Sets 221-248

Mold Plates

Die Blocks & Plates 251-252
Cavity Insert Blocks 253
Standard Mold Plates 254-260
Ejector Plates 261
Ejector Retainers 262
Spacer Blocks/Rails 263-265
Ejector Housings 266-267
Small Mold Base Ejector Plates, ... 268
Retainers & Housings
Large Mold Plates 269-273

Molding Supplies

Mold Cleaner and Mold Saver 275-276

Technical Reference

Metric Equivalents and Conversions 278
Steel Hardness Chart 279
Tensile Strength 280
Draft Angles 281
Steel Designations 282
Tables for Determining Metric Tolerances 283-294
American Standard Mold Base Features 295-298

Index

3-Plate Extension Bushings....170, 197
A-Series Mold Bases....11, 26-32, 39-137
A-Slotted Rail....264
AX-Series Mold Bases....11, 41, 175, 185
Adapter Plates, Custom Universal....201
Adapter Plates, Small Mold Base....200
Additional Assembly SHCS, Minimum Recommended....157-158
Arburg Locating Rings....146
Assembly Screws (SHCS)....148-149,157-158
B-Series Mold Bases....11, 41, 138
Ball Bushings....198
Bolster Plate....see Support Plate
Cavity Insert Blocks....253
Cavity Retainer Sets....221-248
Clamp Slots....12, 150
Column....see Support Pillars
Contour Roughing Services....36
Core Retainer Plate....see B Plate
Custom Large Mold Bases and Plates....36
Determining Metric Tolerances....283-294
Die Blocks and Plates....251-252
Edge Mold Bases....15-23
Edge Pre-Pocketed Mold Bases....22-23
Ejector Assembly Screws....156
Ejector Housing and Cover....154-155
Finish Ground Mold Plates....254
Floating Plate....see Stripper Plate
Guide Pins and Bushings....151
Guided Ejection Systems....162-163
Insulator Sheets....172
Interlocks....171
Leader Pin Vents....168
Lifting Holes....164
Locating Rings....146
Lower Half....see B Plate
Machining Services, Clamp Slots....12
Metric Equivalents and Conversions....210, 278
Mold and Die Steel Descriptions....42-43, 248, 282
Mold Base 88A....52-53
Mold Base 812A....54-55
Mold Base 108A....56-57
Mold Base 1012A....58-59
Mold Base 1016A....60-61
Mold Base 1020A....62-63
Mold Base 1112A....64-65
Mold Base 1114A....66-67
Mold Base 1118A....68-69
Mold Base 1123A....70-71
Mold Base 1212A....72-73
Mold Base 1215A....74-75
Mold Base 1220A....76-77
Mold Base 1223A....78-79
Mold Base 1315A....80-81
Mold Base 1318A....82-83
Mold Base 1321A....84-85
Mold Base 1323A....86-87
Mold Base 1326A....88-89
Mold Base 1329A....90-91
Mold Base 1518A....92-93
Mold Base 1524A....94-95
Mold Base 1529A....96-97
Mold Base 1616A....98-99
Mold Base 1620A....100-101
Mold Base 1623A....102-103
Mold Base 1626A....104-105
Mold Base 1629A....106-107
Mold Base 1635A....108-109
Mold Base 1724A....110-111
Mold Base 1729A....112-113
Mold Base 1818A....114-115
Mold Base 1820A....116-117
Mold Base 1823A....118-119
Mold Base 1826A....120-121
Mold Base 1829A....122-123
Mold Base 1835A....124-125
Mold Base 1924A....126-127
Mold Base 1929A....128-129
Mold Base 1935A....130-131
Mold Base 2424A....132-133
Mold Base 2429A....134-135
Mold Base 2435A....136-137
Mold Base Features – Standard....40-45, 142-143, 295-298
Mold Base Features – Optional....46-47, 144-145
MoldBasics Mold Bases....212-220
Mold Cleaner and Mold Saver....276
Mold Plates....249-274
Mold Strap Holes....168
Parallels....see Spacer Blocks
Pillow....see Support Pillars
Pockets....165
Pry Slots....161
Quick Delivery Specials....33-35
Quick Delivery Standards....25-32
Quote Request Form, Mold Base....48-49
Rails....see Spacer Blocks
Rear Cavity Plate....see B Plate
Retainer Set....see Cavity Retainer Set
Return Pins....152-153
Risers....see Spacer Blocks
Rotary Ground Mold Plates....254
Self-Lubricating Bushings....160
Shuttle Mold Bases....206-209
Small Mold Bases....202-205
Spacer Blocks....263-265, 273
Spacers....see Spacer Blocks
Special Feature Location Form....50
Spring Pockets....168
Sprue Bushings....147
Sprue Puller Pins....152-153
Steel Designations....8, 42-43, 248, 282
Steel Hardness Chart....51, 279
Steel Processing Services....274
Stop Pins....152-153
Stripper Plate....11, 41, 174, 176-184, 198
Support Pillars....166-167
Support Plate....11
T-Series Mold Bases....11, 41, 175, 186-196
Tensile Strength....280
Upper and Lower Assembly Screws....148-149, 157-158
Waterlines....169
X-Plate....see Stripper Plate
X-Series Stripper Mold Bases....11, 41, 176-184, 198

Terms and Conditions of Sale

1. **FOB POINT / PRICES:** Products are sold EXW Madison Heights. Any taxes are in addition to the prices and may be invoiced later.
2. **SHIPPING SCHEDULE:** The shipping schedule is our current estimate of delivery dates and we agree to use reasonable efforts to comply with the schedule.
3. **WARRANTY:**
   (a) Any DME trademarked or tradenamed product or part thereof manufactured by or for us which, under normal operating conditions in the plant of the Buyer thereof, proves defective in material or workmanship, as determined by our inspection, within 12 months from the date of shipment will be replaced or repaired free of charge to Buyer.

   This warranty is contingent upon the following conditions: *that we promptly receive notice of the defect; that Buyer establish that the product has been properly installed, maintained, and operated within the limits of related and normal usage as specified by us; and that, upon our request, Buyer will return to us at our expense the defective product or part thereof.*

   (b) The terms of this warranty do not in any way extend to any product or part thereof which have a life, under normal usage, inherently shorter than 12 months.

   (c) The conditions of actual production in each end user's plant vary considerably. Therefore, descriptions of the production or performance capabilities of any product or software materials are estimates only and are not warranted.
4. **EXCLUSIONS OF WARRANTIES:**

   THE WARRANTIES TO REPAIR OR REPLACE DEFECTIVE PRODUCTS OR PARTS AS SET FORTH IN PARAGRAPH 3, AND ANY ADDITIONAL WARRANTY EXPRESSLY STATED TO BE A WARRANTY AND SET FORTH IN WRITING AS PART OF THESE TERMS HEREIN ARE IN LIEU OF ALL OTHER WARRANTIES, EXPRESS OR IMPLIED, INCLUDING BUT NOT LIMITED TO, ANY IMPLIED WARRANTY OF MERCHANTABILITY OR FITNESS FOR A PARTICULAR PURPOSE.
5. **LIMITATION OF REMEDIES AND LIABILITIES:**

   UNDER NO CIRCUMSTANCES SHALL WE OR ANY AFFILIATE OF OURS HAVE ANY LIABILITY WHATSOEVER FOR INCIDENTAL OR CONSEQUENTIAL DAMAGES HOWSOEVER CAUSED OR ARISING (INCLUDING CONTRACT, NEGLIGENCE, STRICT LIABILITY OR OTHERWISE), such as, but not limited to, loss of profit or revenue; loss of use of the product, part thereof; cost of capital; cost of replacement equipment; claims that the warranty failed of its essential purpose or claims resulting from contracts between Buyer, its customers and/or suppliers. Unless expressly provided for herein, in no event shall we or any affiliate of ours assume responsibility or liability for (a) penalties, penalty clauses or liquidated damages clauses of any description, (b) certifications or (c) indemnification of Buyer or others for costs, damages or expenses arising out of or related to the product or part thereof.
6. **CANCELLATION:** Unless otherwise agreed, Buyer may cancel all or any part of the order by written notice received by us before our completion of the order or applicable portion of the order. On receipt of such notice, all work on the order or part thereof canceled will be stopped as promptly as is reasonably possible. Buyer will then be invoiced for and will pay to us a cancellation charge. For completed items, the charge will be equal to their established prices. For items not completed, the charge will be equal to our full cost plus a premium in addition to a charge for any packing and storage and less a credit for the balance of the material as scrap.
7. **PAYMENT TERMS:** Payment is due in accordance with any applicable progress, advance or other agreed upon payment schedule, or, if no such schedule has been agreed to, upon Acceptance as specified in Paragraph 8, but in no event later than 30 days from the date of invoice. No cash discount is provided. If, in our judgment, Buyer's financial condition changes, we may stop work until financial arrangements satisfactory to us are made.
8. **ACCEPTANCE OF PRODUCT:** Each such product shall be deemed to be accepted within seven days after delivery of the product to the Buyer, unless we receive written notification of rejection for cause from Buyer within the seven day period.

   "Returned Goods": No goods are returnable without prior approval, prepaid transportation and an issued RMA number. All items are subject to our inspection before credit will be allowed. Special mold bases or steel, items involving custom work, or items not shown in our catalog are considered non-returnable. NO GOODS ARE RETURNABLE LATER THAN THIRTY DAYS AFTER RECEIPT OF MERCHANDISE.
9. **PATENT INDEMNITY:** We shall defend any suit or proceeding brought against Buyer and pay all costs and damages awarded against Buyer provided that:
   (a) The suit or proceeding is based upon a claim that the product or part thereof is an infringement of any claim of a presently existing U.S. patent;

   (b) The claim of infringement is not based, directly or indirectly, upon (i) the manufacture, use, or sale of any product furnished by us which has been modified without our consent; or, (ii) the manufacture, use, or sale of any combination of a product furnished by us with products not furnished by us; or (iii) performance of a patented process using a product furnished by us or production thereby of a patented product; and,

   (c) We are notified promptly and given information and assistance (at our expense) and the authority to defend the suit or proceeding. We shall not be responsible hereunder for any settlement made without our written consent nor shall we be responsible for costs or expenses incurred without our written consent. If our product is adjudicated to be an infringement and its use in the U.S. by Buyer is enjoined, we shall, at our own expense, either:

   (i) procure for Buyer the right to continue using our product;
   (ii) replace it with a noninfringing product;
   (iii) modify it so it becomes noninfringing;
   (iv) remove the product or part thereof and refund Buyer's net book value and transportation costs attributable to it.

   The foregoing states our entire liability with respect to any patent infringement by our products or any parts thereof. To the extent that our product or any part thereof is supplied according to specifications and designs furnished by Buyer, Buyer agrees to indemnify us in the manner and to the extent set forth above insofar as the terms thereof are appropriate.
10. **FORCE MAJEURE:** We shall not be liable for any delay in performance or nonperformance which is due to war, fire, flood, acts of God, acts of third parties, acts of governmental authority or any agency or commission thereof, accident, breakdown of equipment, differences with employees or similar or dissimilar causes beyond our reasonable control, including but not limited to, those interfering with production, supply or transportation of products, raw materials or components or our ability to obtain, on terms we deem reasonable, material, labor, equipment or transportation.
11. **ACCEPTANCE OF ORDERS:** Buyer agrees that all orders, including any arising from our Proposal, shall include these terms and conditions only, notwithstanding any different or additional terms that may be embodied in Buyer's order. All orders are subject to our acceptance and we reserve the right to reject orders as, in our sole judgement, mandated by business conditions. We reserve the right to not proceed with any order until all necessary information is received from Buyer.
12. **MERGER CLAUSE:** This Agreement entirely supersedes any prior oral representations, correspondence, proposal, quotation, or agreement. This writing constitutes the final and total expression of such agreement between the parties, and it is a complete and exclusive statement of the terms of that agreement.
13. **ASSIGNMENT:** Neither party may assign this Agreement without the written consent of the other party, except that we may assign this Agreement to a third party that acquires substantially all of our assets or we may assign the flow of funds arising out of this Agreement.
14. **GOVERNING LAW:** This Agreement shall be governed by and construed in accordance with the laws of the State of Michigan.

Sales and Ordering Information

U.S.A.

TERMS AND CONDITIONS OF SALE: See previous page.

PHONE ORDERS – TOLL FREE: 800-626-6653. Our Customer Service Dept. operates Monday through Friday from 8 a.m. to 6 p.m. E.S.T. Calls can be made from anywhere in the continental U.S. and Puerto Rico (Puerto Rico: use "137" prefix instead of "1"). Our Customer Service Representatives will be happy to answer your questions on DME products or services, provide on-the-spot feedback on product availability and shipping details, or take any messages you wish relayed to your local DME sales, manufacturing or technical service representatives.

MAIL ORDERS: If you prefer to order by mail, please address your order to:

- DME Company, 29111 Stephenson Highway, Madison Heights, Michigan 48071-2330
  ATTN: Customer Service Dept.

FAX: You may fax your order to:

- DME Customer Service
  248-544-5113 • 888-808-4363

CHECKS OR MONEY ORDERS: When paying invoices by check or money order, please make payable to *DME Company.* Include remittance copy of invoice and mail to:

- DME Company LLC, Department Lock Box 774867, 4867 Solutions Center, Chicago, IL 60677-4008

WALK-IN ORDERS, PICK-UPS AND RETURNS: If desired, ordered products in stock at your nearest DME Service Center can be picked up rather than shipped. Walk-in orders at Service Center locations can also be processed while you wait. Products being returned for repair or exchange should be processed through Customer Service prior to being returned.

SPECIAL MACHINING SERVICES: Prints for quotation on special machining work can be sent by EDI to dme_cad@dme.net or mailed to the Estimating Department of the DME manufacturing location nearest you. Call our toll-free number if desired to clarify location which serves your area.

Estimating locations are:

- 70 East Hillis Street, Youngwood, Pa 15697, FAX: 724-925-2424
- 1117 Fairplains Street, Greenville, MI 48838, Tel. 616-754-4601, FAX: 616-225-3924
- 3275 Deziel Drive, Windsor, Ont N8W 5A5, Tel. 519-948-5001, FAX: 519-948-4652

Please add "DME Company" and "Attn: Estimating Dept." to above addresses when mailing prints. To obtain prices and delivery on special mold base orders or to check status of special work in progress please contact Customer Service.

CANADA

TERMS AND CONDITIONS OF SALE: See previous page.

PHONE ORDERS: Contact our Mississauga, Ontario office at 800-387-6600, FAX: 800-461-9965.

MAIL ORDERS: Send to: DME Company Ltd., 6210 Northwest Drive, Mississauga, Ontario L4V 1J6.

CHECK OR MONEY ORDERS: Make payable to *DME Company Ltd.* Include remittance copy of invoice and mail to Mississauga address above.

WALK-IN ORDERS, PICK-UPS, RETURNS, AND SPECIAL MACHINING: Contact our Mississauga office.

Mold Bases: What Every Molder Should Know

Today's mold-building process is a complex one for the molder, who must grapple with a long list of design details before placing a tooling order. It's understandable that much of the buyer's attention goes to the "heart" of the injection mold, the core and cavity inserts, since they have the most visible influence on the molded part. Yet all sorts of ancillary tooling components, to which the molder might not be inclined to give much thought, can also make or break a mold.

One item that sometimes gets lost in the shuffle is the mold base, even though the wrong one can severely limit a mold's productivity. Rather than an afterthought, mold base selection should be considered critical to the profitability of the entire molding project.

When selecting a mold base for a particular job, first ask a few key questions about the part's design and processing demands: What kind of ejection does it need? Does it have a cam action or some other mold-action device? What are the volume requirements? What type of machine will it run on?

Answer these design and processing questions, and you'll be well on your way to picking the standardized or special-purpose mold base best suited to your application.

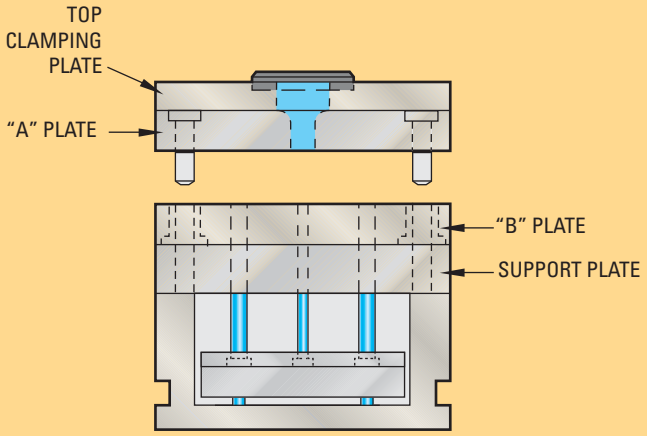

A-Series Mold Base Assembly

The most frequently used standard assembly, the "A" Series Mold Base, is available in 43 sizes from 7.875 x 7.875 to 23.75 x 35.5.

"Core and cavity inserts … have the most visible influence on the molded part yet … mold base selection should be considered critical to the profitability of the entire molding project."

Standard Mold Base Styles

For most applications, a standard mold base will fit the bill. The most common of these is the "A-style," which has the flexibility to fit into the widest variety of molding applications.

A-style models have a four-plate design: (from top to bottom) top clamp plate, A-plate, B-plate, support plate, ejector retainer, ejector bar, and ejector housing. Mold makers using an A-style mold base typically machine through pockets in the "A" and "B" plates to accept just about any kind of core and cavity insert.

The B-style mold base represents an economy version of the A-style. The B-style's two-plate design combines the top clamp plate and the "A" plate into one component called the "A-Clamping Plate" or ACP. Likewise, a beefed-up "B" plate eliminates the need for a support plate on the core side of the mold.

Molders can use the less-costly "B" Series when the part design allows the cavity and core to be machined directly into the cavity plates. If the mold will be used with cavity inserts, they must be machined into blind pockets. The compactness of the "B" series mold base also makes it applicable whenever overall mold height must be limited in order to fit the tool in a given molding machine.

Special-Purpose Machines
Mold action and ejection requirements will often dictate the use one of three special-purpose mold bases instead of the simpler A- and B-styles.

One of these is the X-style, or stripper-plate, mold base. Sandwiched between the "A" and "B" plates, its stripper ("X") plate engages the edge of a part and pushes it off the core. Typically, the X-style sees use with round parts like cups, caps, and containers. This style of mold base comes in both five- and six-plate styles- -with the six-plate version including a support plate.

The AX-style mold base is used for parts requiring core detail in the cavity side of the mold. When the mold opens, that core detail is pulled so that the part remains on the ejector side of the mold. The AX-style is essentially an A-style mold base with an "X-1" plate, located between the "A" and "B" plates but attached to the top half of the mold so that it can pull the part off the core detail.

The "T" style, or three-plate, mold base is used when the molder would like to separate the part from the runner in the tool. "T" series mold bases consist of an "A" clamping plate, "X-1" plate, "X-2" plate, "B" plate, and the ejector assembly and housing. Unlike the other mold bases, the "T" series operates with two parting lines. The first parting line, which occurs between the X-1 and X-2 plates, separates the part from the gate prior to opening the main parting line. The main parting line then opens and the X-1 plate is actuated to pull the runner from the sprue-puller pin, thereby freeing the runner and allowing it to be ejected separately from the part being produced.

See page 11 for illustrations of standard mold base types.

Choosing A Steel
Steel selection is an important aspect of specifying the right mold base. Generally there are four standard grades of steel available. See page 8 for mold and die steel descriptions.

Molding Machine Considerations
After you've picked the right style and steel for your mold base, it's time to consider variables related to the molding machine: the locating-ring style, sprue bushing, and clamp slots.

The mold maker must select the type of locating ring that will match the platens of the machine in which the mold will be running. Locating rings are available in a wide variety of configurations to fit most injection machines, but the most common locating ring has a 3.990 in. outside diameter.

Sprue bushings must also match the machine, so be sure to determine the proper orifice and radius of the sprue bushing so it will match the machine nozzle. The most common type of sprue bushing is made from 6145 steel that has been hardened, ground, and polished for sprue release. In some applications it is desirable to use a high-conductivity copper-alloy sprue bushing.

"High-performance sprue bushings cool the sprue quickly when either the sprue weight is greater than the part weight, or a rigid target is needed for a robotic sprue picker …"

These "high-performance" sprue bushings can cool the sprue quickly when either the sprue weight is greater than the part weight, or a rigid target is needed for a robotic sprue picker, or when scrap would result from a hot sprue coming in contact with a finished part. High-performance sprue bushings are fully interchangeable with the standard bushings.

A number of different clamp-slot styles are available. Whatever the style, make sure it's compatible with the thickness of the top clamping plate on your mold base (ACP, "A" plate, or AX plate).

Finally, the molder needs to determine the correct mold base height in relation to the maximum space available in the press. A mold base that won't run in the appropriate size of press can turn potential profit into loss. In addition, be aware of the maximum stroke required to eject the part for the mold.

STEEL DESCRIPTIONS

Three Steels for Structural Sections

DME NO. 1 STEEL

No. 1 Steel is a medium carbon (SAE 1030) or equivalent, silicon-killed forging quality steel with approximately 25% greater tensile strength than typical low-carbon warehouse steels. It machines easily, but is not "sticky," permitting a faster and smoother cut.

DME NO. 2 STEEL

No. 2 Steel is an AISI 4130 or equivalent type steel. It is supplied pre-heat treated to 28-34 HRC (271-321 Bhn). A high strength steel, it is ideal for cavity and core retainer plates, clamping plates and support plates in molds and dies.

DME NO. 7 STEEL

No. 7 Steel is a modified AISI 400 or equivalent series stainless steel for holder block applications. It is supplied pre-heat treated to 32-36 HRC (302-340 Bhn). This stainless steel offers corrosion-resistance and exceptional machinability but cannot be further hardened (see DME No. 6). For humid environments, corrosive plastics, "clean room" or "100% stainless" applications, it is an ideal choice for all structural (non-cavity/core) mold plates.

Three Steels for Cavities and Cores

DME NO. 3 STEEL

No. 3 Steel is a P-20 AISI 4130 (modified) type cavity steel. Exceptionally clean, it is pre-heat treated to 28-34 HRC (271-321 Bhn). It provides high hardness, good machinability and exceptional polishability for both plastics molds and die cast dies.

DME NO. 5 STEEL

No. 5 Steel is a thermal shock resistant, hotwork die steel (AISI-SAE H-13 type) or equivalent. Supplied fully annealed 13-20 HRC (approx. 200 Bhn) for easy machinability, it can be subsequently heat treated to the desired hardness with a minimum of deformation.

Mainly used for die cast dies, it is also suitable for plastics molds with exceptional hardness or polishability requirements.

DME NO. 5 Steel meets or exceeds the acceptance criteria established by the NADCA as detailed in Technical Digest Number 01-80-01D

DME NO. 6 STEEL

No. 6 Steel is T-420 type or equivalent stainless steel. It is supplied fully annealed to 8-23 HRC (179-241 Bhn), making it readily machinable. It can be used for injection, compression or transfer molds where the properties of the plastics materials or excessive condensation require a highly corrosion resistant cavity steel.

OTHER TYPES OF STEEL AVAILABLE ON SPECIAL ORDER. CONTACT DME.

Benefits of Standard Mold Base Assemblies and Components

Seven major benefits of DME Standard Mold Base Assemblies and Components

1. Made of high quality, pre-finished mold and die steels that give you more for your money; more metallurgical consistency; more cleanliness in cavity steels; more reliability.
2. Assemblies, plates and components are pre-engineered to give you the economic and technical benefits of interchangeability.
3. Manufactured with the most advanced, precision equipment – and quality control tested to give you reliable performance.
4. Gives designers more freedom and flexibility – more time to devote to the truly creative aspects of mold, die, and product design.
5. Gives mold and die makers more time to concentrate on cavities and cores – thus increasing productivity as much as 40%.
6. Gives molders more quality parts per hour, more profitability – with production proven construction that outlasts the longest runs.
7. Readily available as you need them. The more popular assemblies are always in stock for same-day service. Our nationwide network of Service Centers means you have the products and the people near you to help you save time, money and inventory costs.

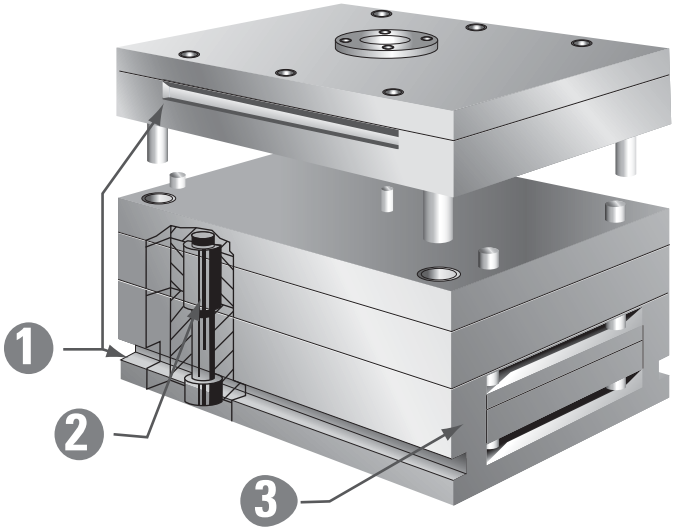

These three features have helped make DME Standard Mold Bases the most frequently specified mold base assemblies in the world:

1. CLAMP SLOTS that save platen space and provide maximum cavity area
2. TUBULAR DOWELS that provide more room for waterlines
3. ONE-PIECE EJECTOR HOUSING that gives added strength and simplifies construction

INJECTION MOLDING

Injection molding is recognized as the single most important form of plastics processing. Beginning with just a handful of standardized mold bases and components in 1942, DME now offers thousands of standardized mold base assemblies and a broad variety of mold components to satisfy the consistent need for high-quality injection molds. Primarily used for thermoplastics injection molding, most of our assemblies and components are readily adaptable for the injection molding of thermosets. Future product developments from DME will include standardized components specifically designed for the injection molding of thermoset materials.

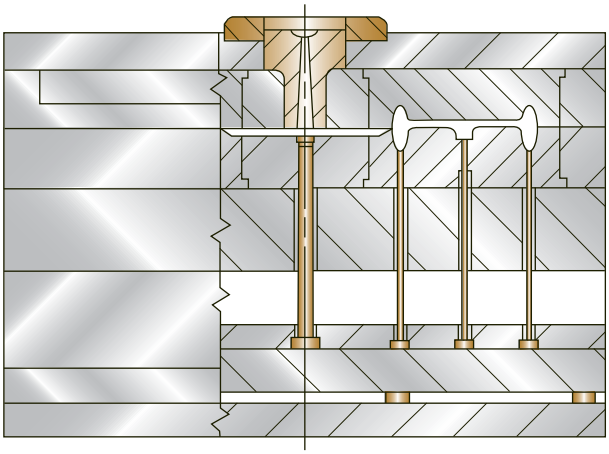

DME Standard "A" Series Mold Base with Cavity Inserts

DME Item Number System

The item number system employed by DME not only prevents the duplication of item numbers, but helps lessen the chances of error in the writing and production of orders. This is accomplished by incorporating actual dimensional data into the item numbers as indicated below.

MOLD BASES – "A" AND "B" SERIES

The item numbers for Standard Mold Bases in the "A" and "B" Series combine the NOMINAL Size (width and length), the Series (A or B) and the thicknesses of the "A" (or "A"-Clamping) and "B" Plates.

Since all the standard mold plate thicknesses are a combination of a whole number and either $^3/_8$ or $^7/_8$, the designation 13 indicates 1 and $^3/_8$; 17 indicates 1 and $^7/_8$; 23 indicates 2 and $^3/_8$, etc.

For Example: 1016A-13-37 is the item number for a $9^7/_8 \times 16$" "A" Series Mold Base with "A" plate $1^3/_8$ and "B" plate $3^7/_8$ thick.

MOLD BASES – "X" OR STRIPPER PLATE SERIES

The item numbers for the Stripper Plate Series Mold Base combine the NOMINAL Size (width and length), the letter "X" for Stripper Plate, the numeral 5 or 6 (plate series) and the "AX" plate thickness.

Since the "X" plate thickness is constant at $^7/_8$ or $1^3/_8$, and the "BX" plate thickness is constant at $1^3/_8$, $1^7/_8$ or $2^3/_8$, depending on the mold base nominal size and number of plates in the assembly, these thicknesses are not represented in the item number.

For Example: 1818X-5-13 is the item number for a $17^7/_8 \times 18$", 5-plate "X" series Mold Base with a $1^3/_8$ thick "AX" plate. (In this case, the "X" plate is $1^3/_8$ thick, and the "BX" plate is $2^3/_8$ thick).

"AX" AND "T" SERIES MOLD BASES

The item numbers for the "AX" Series Mold Bases combine the NOMINAL Size (width and length), the letters "AX" and the thickness of the "A" and "B" plates. The "X-1" plate thickness is specified when ordering and is omitted from the item number.

For Example: 1212AX-13-37 is the item number for an $11^7/_8 \times 12$" "AX" Series Mold Base with a $1^3/_8$ thick "A" plate and $3^7/_8$ thick "B" plate. The "X-1" plate thickness (e.g. $^7/_8$) is then specified when ordering.

The item numbers for the "T" Series Mold Bases combine the NOMINAL Size (width and length), the letter "T" and the thickness of the "X-2" and "B" plates.

Since the thickness of the "A"-Clamping plate is constant at $1^7/_8$ or $2^3/_8$ and the "X-1" plate thickness is constant at $^7/_8$ or $1^3/_8$, depending on the nominal size of the mold base, these thicknesses are not represented in the item number.

For Example: 1012T-23-17 is the item number for a $9^7/_8 \times 11^7/_8$ "T" Series Mold Base with a $2^3/_8$ thick "X-2" plate and $1^7/_8$ thick "B" plate. (In this case, the "A"-Clamping plate is $1^7/_8$ thick and the "X-1" plate is $^7/_8$ thick).

CAVITY RETAINER SETS

Since Cavity Retainer Sets are made up solely of an "A" and "B" plate, the item numbers combine the NOMINAL Size, and the "A" and "B" plate thicknesses. (The absence of the letter "A", "B", "AX", or "T" distinguish these numbers from the item numbers of Standard Mold Bases).

For Example: 1215-33-47 is an $11^7/_8 \times 15$" Cavity Retainer Set with "A" plate $3^3/_8$ and "B" plate $4^7/_8$ thick.

MOLD PLATES

The same principle used for numbering Cavity Retainer Sets is applied to Standard Mold Plates; however, only one plate thickness is required. (Since the item numbers for retainer sets will always indicate two separate plate thicknesses, the distinction between these two items is easily identified).

For Example: 1318-47 is a $13^3/_8 \times 18$" Mold Plate, $4^7/_8$ thick.

NOTE: While an understanding of this item number system can be very helpful in identifying and referring to the various standard sizes, the DME catalog should be consulted when ordering any standard item.

Standard Mold Base Terminology

"A" AND REVERSE "A" SERIES ASSEMBLIES

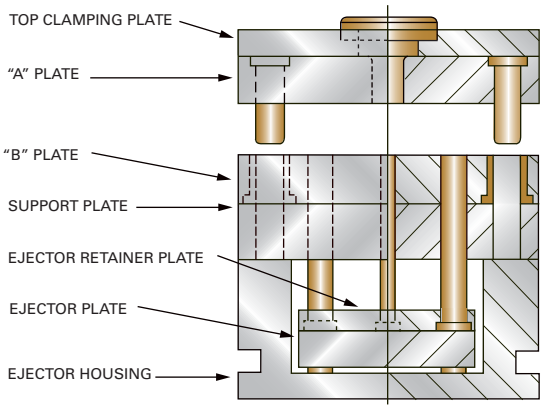

The most frequently used Standard Assembly, the "A" Series Mold Base is available in 43 sizes from $7\frac{7}{8} \times 7\frac{7}{8}$ to $23\frac{3}{4} \times 35\frac{1}{2}$. See pages 52-137 for complete information.

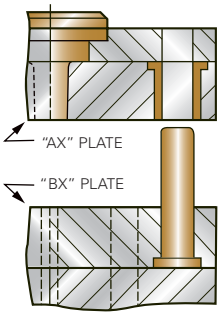

REVERSE "A" SERIES

Identical to the "A" Series, with leader pins and bushings "reversed." Specify "AX" and "BX" plate thicknesses when ordering (rather than "A" and "B").

"B" SERIES ASSEMBLY

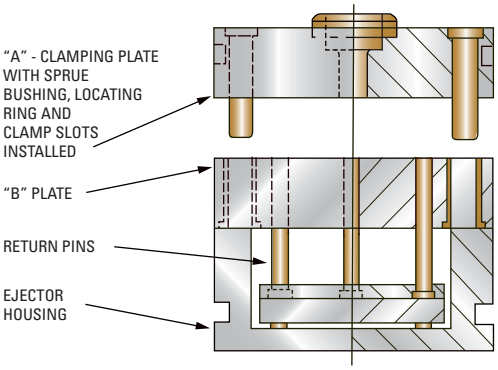

When cavities and cores are to be inserted into blind pockets, or machined directly into the "A" and "B" plates, the "B" Series Assembly is used. The Top Clamping Plate and Support Plate are omitted from the assembly.

"X" SERIES (STRIPPER PLATE) ASSEMBLY

Most frequently used for molds requiring stripper plate ejection, the "X" Series Assembly is available with a Support Plate (6-plate series) or without a Support Plate (5-plate series).

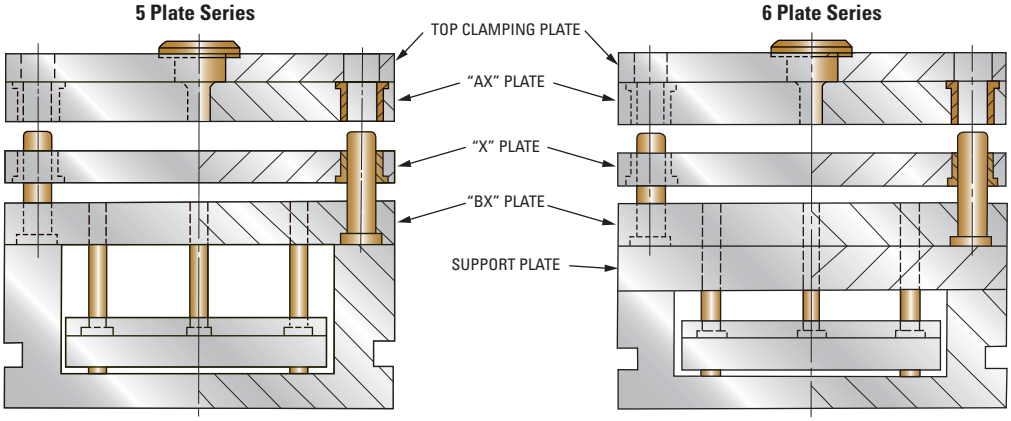

"AX" SERIES ASSEMBLY

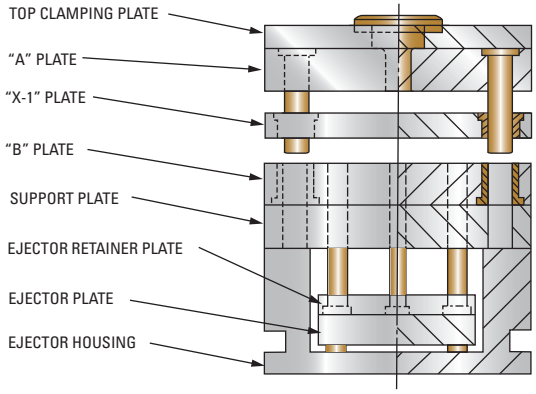

The "AX" Series Assembly is used when the mold requires a floating plate to remain with the upper or stationary half of the assembly. It is basically an "A" Series Assembly with a floating plate ("X-1") added.

"T" SERIES ASSEMBLY

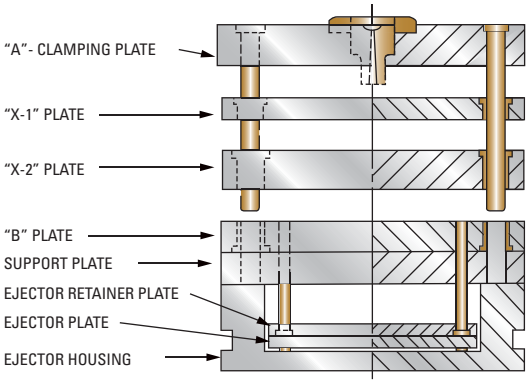

The "T" Series Assembly is used for top runner molds that require two floating plates ("X-1" – runner stripper plate, "X-2" – cavity plate) to remain with the upper or stationary half of the assembly.

Machining of Clamp Slots

Clamp Slots facilitate clamping the mold to the platen of the press. DME mold bases offer four slot types (shown below) to ensure the best fit for the requirements of your application.

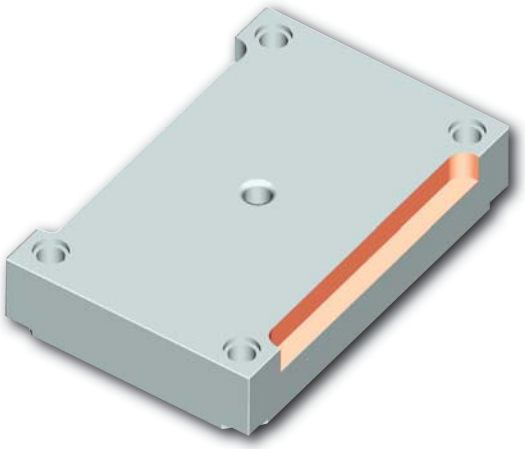

Type A

Machined when Top Clamping Plate is 0.875 or 1.375

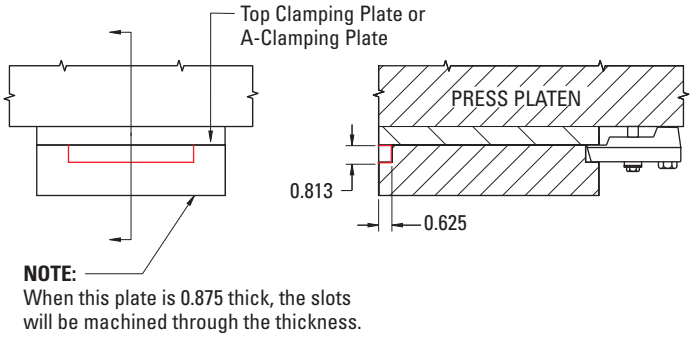

Type B

Machined in plates that are 2.375 or thicker

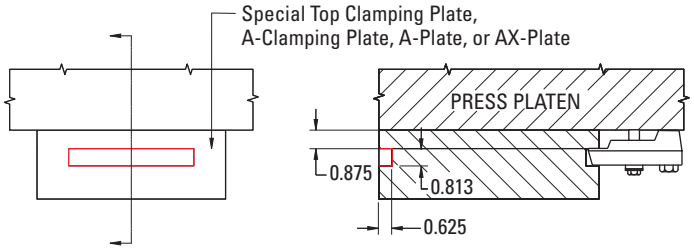

Type C

Machined only when specified by a customer

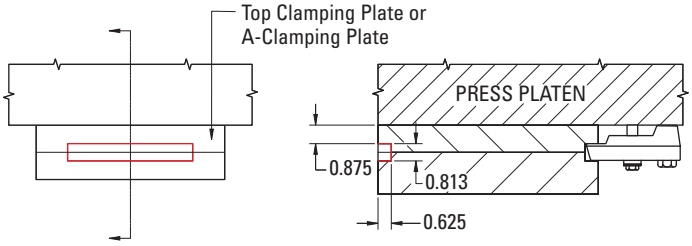

Type D

Machined plates that are 1.875 thick

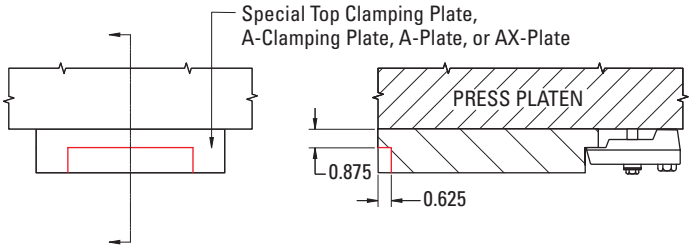

DME Edge Mold Bases

THE LOWEST-PRICED MOLD BASE ON THE MARKET IS IN STOCK IN 70 DIFFERENT SIZES

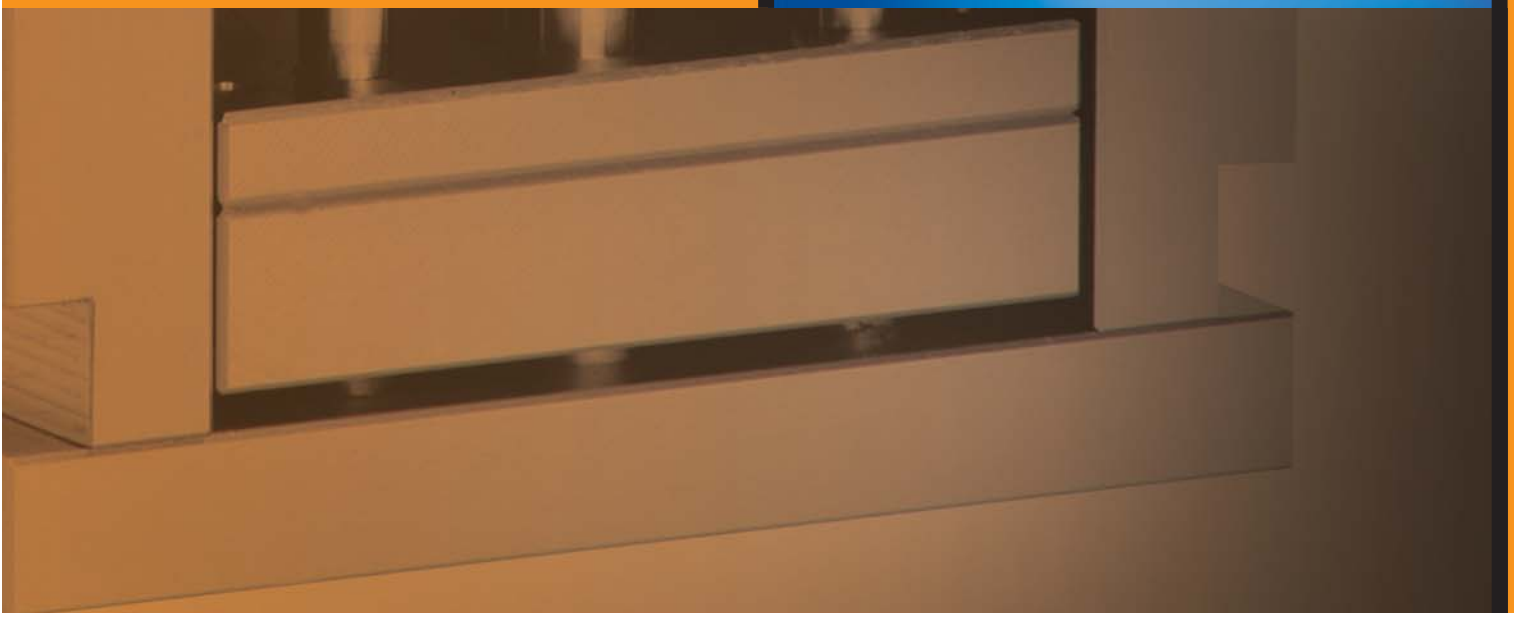

Providing a Competitive Advantage

THE NEW EDGE MOLD BASE GIVES YOUR CUSTOMERS A COMPETITIVE ADVANTAGE

What is the "Edge" concept? It's an A-Series Mold Base with seven features in DME #3 steel with a 30-40% price advantage. And with every Edge Mold Base, you get seven decades of reliable DME quality-assured manufacturing capabilities that includes the absolute best service, price and delivery that will have your customers coming back for more.

DME has supported moldmakers, processors and designers around the globe since it innovated the standard mold base in 1942. Today, we offer the industry's broadest range of market-leading products. In a recent Moldmaking Industry Survey, moldmakers said they needed an edge to better compete. That's why our full featured, ready-to-ship mold base is called the Edge. Essentially, moldmakers named it for us! The Edge gives you the competitive and profitability advantages that DME customers demand.

As you continue to positively impact your operations through process efficiencies, technology enhancements, and automation improvements, the DME Edge Mold Base is with you every step of the way by providing the value, speed and exceptional quality that customers have long expected from the industry's standard-setter in mold technologies. Even our competitors look to us as standard-setters; so much so, that today, competitors still promote their products by comparing them to ours.

Get the Edge Mold Base and you'll have another ingredient for the formula for a successful, growing business, and a partnership with the global mold technologies leader.

FREQUENTLY ASKED QUESTIONS ABOUT DME

Where is the Edge Mold Base manufactured?

The DME Edge Mold Base is part of an extensive worldwide manufacturing and distributing presence. The Edge Mold Base is manufactured using the same stringent quality-assured processes and standards that have been adhered to during the manufacture of DME U.S.-made mold bases for many decades. This manufacturing consistency and repeatability on every continent ensures that every mold base has the quality steel and construction that makes DME mold bases the highest valued mold bases throughout the world.

I make my own mold bases; can the DME Edge Mold Base make me more competitive?

Yes! With our low U.S. prices, the Edge Mold Base is more than competitive when compared against in-house manufactured bases. In today's marketplace, most moldmakers don't have the luxury of having tool makers and/or apprentices make mold bases. Factoring direct labor costs alone, the DME Edge Mold Base is priced so low that even the most efficient shop will save money by purchasing instead of making.

Are special machining services offered?

Yes! DME has the most comprehensive worldwide product offering for in-house machining services! Whether you need simple pocket roughing, 3D contour roughing of core and cavity blocks, or a completely finished mold base that meets your exact specifications and tolerances, DME special machining are available both locally and globally. No one in our industry offers a wider range of special machining services, and no one in our industry has the decades of machining experience and steel supplier relationships that provide our competitive advantage.

Industry-leading DME Manufacturing, Tolerances and Distribution!
Get the competitive and profitability advantage with the DME Edge!

Advantages and Features

EDGE MOLD BASE ADVANTAGES

- 70 different mold base assemblies ready for quick delivery
- The lowest-priced mold base on the market
- Most sizes available for same-day shipment
- Seven popular mold base features
- Reliable DME quality-assured services, including manufacturing, inspection and distribution

EDGE MOLD BASE FEATURES

- A-Plates and B-Plates supplied with DME #3 steel
- Pry slots installed on both sides of "B" plate
- Lift holes installed
- Return pins installed 0.125 inboard to allow for spring pockets
- Leader pin vents machined in the housing under the bushing location
- Guided ejection installed
- Three-piece ejector housing
- Center hole machining included for sprue bushing and locating ring counterbore

NOTE: See Standard & Optional Mold Base Features section for specifications regarding Edge Mold Base features.

Product Selection Tables

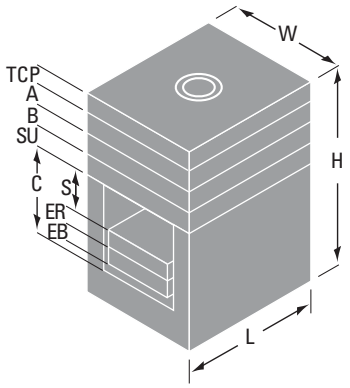

Variables

Below is a list of the variables for the Edge series mold bases and their definitions

W = Width
L = Length
TCP = Top clamp plate thickness
A = A plate thickness
B = B plate thickness
SU = Support plate thickness
C = Height of the riser
S = Maximum stroke of the ejector bar
H = Mold base height
EB = Ejector bar thickness
ER = Ejector retainer thickness
P = Housing riser thickness
RPx = Return pin location on the X axis (3 places)
RPy = Return pin location on the Y axis (4 places)
RPos = Return pin offset on the X axis (1 place)
RPg = Return pin diameter
LPg = Leader pin diameter

7.875 × 7.875

ITEM NUMBER	W	L	A	B	C	S	H	WEIGHT (LBS)
EDA0808-07-07	7.875	7.875	0.875	0.875	2.500	0.813	7.375	111
EDA0808-13-13	7.875	7.875	1.375	1.375	2.500	0.813	8.375	129
EDA0808-17-17	7.875	7.875	1.875	1.875	2.500	0.813	9.375	147
EDA0808-23-23	7.875	7.875	2.375	2.375	3.000	1.313	10.875	167

All Items	W	7.875	EB	1.000	P	1.250	TCP	1.375	RPx	3.313	RPg	0.500
	L	7.875	ER	0.500	SU	1.375	RPos	3.188	RPy	1.500	LPg	0.750

7.875 × 11.875

ITEM NUMBER	W	L	A	B	C	S	H	WEIGHT (LBS)
EDA0812-07-07	7.875	11.875	0.875	0.875	2.500	0.813	7.375	174
EDA0812-13-13	7.875	11.875	1.375	1.375	3.000	1.313	8.875	205
EDA0812-17-17	7.875	11.875	1.875	1.875	3.500	1.813	10.375	235
EDA0812-23-23	7.875	11.875	2.375	2.375	3.500	1.813	11.375	262

All Items	W	7.875	EB	1.000	P	1.250	TCP	1.375	RPx	5.313	RPg	0.500
	L	11.875	ER	0.500	SU	1.375	RPos	5.188	RPy	1.500	LPg	0.750

9.875 × 8.000

ITEM NUMBER	W	L	A	B	C	S	H	WEIGHT (LBS)
EDA1008-07-07	9.875	8.000	0.875	0.875	2.500	0.813	7.375	158
EDA1008-13-13	9.875	8.000	1.375	1.375	2.500	0.813	8.875	181
EDA1008-17-17	9.875	8.000	1.875	1.875	3.500	1.813	10.875	209

All Items	W	9.875	EB	1.000	P	1.438	TCP	1.375	RPx	3.250	RPg	0.625
	L	8.000	ER	0.500	SU	1.875	RPos	3.125	RPy	2.250	LPg	0.750

9.875 × 11.875

ITEM NUMBER	W	L	A	B	C	S	H	WEIGHT (LBS)
EDA1012-07-07	9.875	11.875	0.875	0.875	2.500	0.813	7.875	235
EDA1012-13-13	9.875	11.875	1.375	1.375	3.000	1.313	9.375	273
EDA1012-17-17	9.875	11.875	1.875	1.875	3.500	1.813	10.875	311
EDA1012-23-23	9.875	11.875	2.375	2.375	3.500	1.813	11.875	344

All Items	W	9.875	EB	1.000	P	1.438	TCP	1.375	RPx	5.188	RPg	0.625
	L	11.875	ER	0.500	SU	1.875	RPos	5.063	RPy	2.250	LPg	0.875

9.875 × 16.000

ITEM NUMBER	W	L	A	B	C	S	H	WEIGHT (LBS)
EDA1016-07-07	9.875	16.000	0.875	0.875	2.500	0.813	7.875	316
EDA1016-13-13	9.875	16.000	1.375	1.375	3.000	1.313	9.375	367
EDA1016-17-17	9.875	16.000	1.875	1.875	3.500	1.813	10.875	418
EDA1016-23-23	9.875	16.000	2.375	2.375	3.500	1.813	11.875	463

All Items	W	9.875	EB	1.000	P	1.438	TCP	1.375	RPx	7.250	RPg	0.625
	L	16.000	ER	0.500	SU	1.875	RPos	7.125	RPy	2.250	LPg	0.875

Product Selection Tables

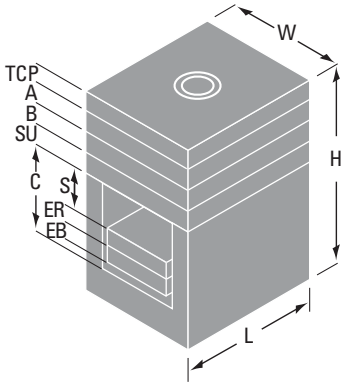

Below is a list of the variables for the Edge series mold bases and their definitions

W = Width
L = Length
TCP = Top clamp plate thickness
A = A plate thickness
B = B plate thickness
SU = Support plate thickness
C = Height of the riser
S = Maximum stroke of the ejector bar
H = Mold base height
EB = Ejector bar thickness
ER = Ejector retainer thickness
P = Housing riser thickness
RPx = Return pin location on the X axis (3 places)
RPy = Return pin location on the Y axis (4 places)
RPos = Return pin offset on the X axis (1 place)
RPg = Return pin diameter
LPg = Leader pin diameter

9.875 × 20.000

ITEM NUMBER	W	L	A	B	C	S	H	WEIGHT (LBS)
EDA1020-13-13	9.875	20.000	1.375	1.375	3.000	1.313	9.375	459
EDA1020-17-17	9.875	20.000	1.875	1.875	3.500	1.813	10.875	523
EDA1020-23-23	9.875	20.000	2.375	2.375	3.500	1.813	11.875	579

All Items	W	9.875	EB	1.000	P	1.438	TCP	1.375	RPx	9.250	RPg	0.625
	L	20.000	ER	0.500	SU	1.875	RPos	9.125	RPy	2.250	LPg	0.875

10.875 × 12.000

ITEM NUMBER	W	L	A	B	C	S	H	WEIGHT (LBS)
EDA1112-13-13	10.875	12.000	1.375	1.375	3.000	1.313	9.375	305
EDA1112-17-17	10.875	12.000	1.875	1.875	3.500	1.813	10.875	347
EDA1112-23-23	10.875	12.000	2.375	2.375	3.500	1.813	11.875	384

All Items	W	10.875	EB	1.000	P	1.688	TCP	1.375	RPx	5.250	RPg	0.625
	L	12.000	ER	0.500	SU	1.875	RPos	5.125	RPy	2.813	LPg	0.875

10.875 × 14.000

ITEM NUMBER	W	L	A	B	C	S	H	WEIGHT (LBS)
EDA1114-13-13	10.875	14.000	1.375	1.375	3.000	1.313	9.375	355
EDA1114-17-17	10.875	14.000	1.875	1.875	3.500	1.813	10.875	405
EDA1114-23-23	10.875	14.000	2.375	2.375	3.500	1.813	11.875	448

All Items	W	10.875	EB	1.000	P	1.688	TCP	1.375	RPx	6.250	RPg	0.625
	L	14.000	ER	0.500	SU	1.875	RPos	6.125	RPy	2.813	LPg	0.875

10.875 × 18.000

ITEM NUMBER	W	L	A	B	C	S	H	WEIGHT (LBS)
EDA1118-13-13	10.875	18.000	1.375	1.375	3.000	1.313	9.375	457
EDA1118-17-17	10.875	18.000	1.875	1.875	3.500	1.813	10.875	521
EDA1118-23-23	10.875	18.000	2.375	2.375	3.500	1.813	11.875	576

All Items	W	10.875	EB	1.000	P	1.688	TCP	1.375	RPx	8.250	RPg	0.625
	L	18.000	ER	0.500	SU	1.875	RPos	8.125	RPy	2.813	LPg	0.875

11.875 × 12.000

ITEM NUMBER	W	L	A	B	C	S	H	WEIGHT (LBS)
EDA1212-13-13	11.875	12.000	1.375	1.375	3.000	1.188	9.375	335
EDA1212-17-17	11.875	12.000	1.875	1.875	3.000	1.188	10.375	375
EDA1212-23-23	11.875	12.000	2.375	2.375	3.500	1.688	11.875	422
EDA1212-27-27	11.875	12.000	2.875	2.875	4.000	2.188	13.375	468

All Items	W	11.875	EB	1.125	P	1.688	TCP	1.375	RPx	5.125	RPg	0.750
	L	12.000	ER	0.500	SU	1.875	RPos	5.000	RPy	3.188	LPg	1.000

Product Selection Tables

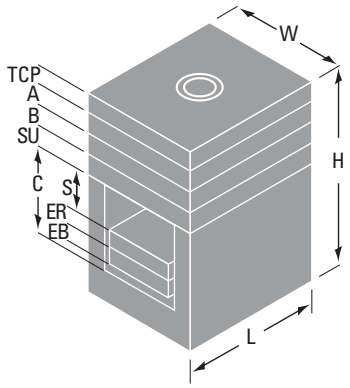

Variables

Below is a list of the variables for the Edge series mold bases and their definitions

W = Width
L = Length
TCP = Top clamp plate thickness
A = A plate thickness
B = B plate thickness
SU = Support plate thickness
C = Height of the riser
S = Maximum stroke of the ejector bar
H = Mold base height
EB = Ejector bar thickness
ER = Ejector retainer thickness
P = Housing riser thickness
RPx = Return pin location on the X axis (3 places)
RPy = Return pin location on the Y axis (4 places)
RPos = Return pin offset on the X axis (1 place)
RPg = Return pin diameter
LPg = Leader pin diameter

11.875 × 15.000

ITEM NUMBER	W	L	A	B	C	S	H	WEIGHT (LBS)
EDA1215-13-13	11.875	15.000	1.375	1.375	3.000	1.188	9.375	419
EDA1215-17-17	11.875	15.000	1.875	1.875	3.000	1.188	10.375	469
EDA1215-23-23	11.875	15.000	2.375	2.375	3.500	1.688	11.875	527
EDA1215-27-27	11.875	15.000	2.875	2.875	4.000	2.188	13.375	584

All Items	W	11.875	EB	1.125	P	1.688	TCP	1.375	RPx	6.625	RPg	0.750
	L	15.000	ER	0.500	SU	1.875	RPos	6.500	RPy	3.188	LPg	1.000

11.875 × 20.000

ITEM NUMBER	W	L	A	B	C	S	H	WEIGHT (LBS)
EDA1220-13-13	11.875	20.000	1.375	1.375	3.000	1.188	9.375	558
EDA1220-17-17	11.875	20.000	1.875	1.875	3.000	1.188	10.375	625
EDA1220-23-23	11.875	20.000	2.375	2.375	3.500	1.688	11.875	702
EDA1220-27-27	11.875	20.000	2.875	2.875	4.000	2.188	13.375	779

All Items	W	11.875	EB	1.125	P	1.688	TCP	1.375	RPx	9.125	RPg	0.750
	L	20.000	ER	0.500	SU	1.875	RPos	9.000	RPy	3.188	LPg	1.000

13.375 × 15.000

ITEM NUMBER	W	L	A	B	C	S	H	WEIGHT (LBS)
EDA1315-13-13	13.375	15.000	1.375	1.375	3.000	1.063	9.875	505
EDA1315-17-17	13.375	15.000	1.875	1.875	3.000	1.063	10.875	562
EDA1315-23-23	13.375	15.000	2.375	2.375	3.500	1.563	12.375	627
EDA1315-27-27	13.375	15.000	2.875	2.875	4.000	2.063	13.875	692

All Items	W	13.375	EB	1.125	P	1.875	TCP	1.375	RPx	6.625	RPg	0.750
	L	15.000	ER	0.625	SU	1.875	RPos	6.500	RPy	3.813	LPg	1.000

13.375 × 18.000

ITEM NUMBER	W	L	A	B	C	S	H	WEIGHT (LBS)
EDA1318-13-13	13.375	18.000	1.375	1.375	3.000	1.063	9.875	606
EDA1318-17-17	13.375	18.000	1.875	1.875	3.000	1.063	10.875	675
EDA1318-23-23	13.375	18.000	2.375	2.375	3.500	1.563	12.375	752
EDA1318-27-27	13.375	18.000	2.875	2.875	4.000	2.063	13.875	830

All Items	W	13.375	EB	1.125	P	1.875	TCP	1.375	RPx	8.125	RPg	0.750
	L	18.000	ER	0.625	SU	1.875	RPos	8.000	RPy	3.813	LPg	1.000

13.375 × 20.750

ITEM NUMBER	W	L	A	B	C	S	H	WEIGHT (LBS)
EDA1321-17-17	13.375	20.750	1.875	1.875	3.000	1.063	10.875	777
EDA1321-23-23	13.375	20.750	2.375	2.375	3.500	1.563	12.375	867
EDA1321-27-27	13.375	20.750	2.875	2.875	4.000	2.063	13.875	957

All Items	W	13.375	EB	1.125	P	1.875	TCP	1.375	RPx	9.500	RPg	0.750
	L	12.750	ER	0.625	SU	1.875	RPos	9.375	RPy	3.813	LPg	1.000

Product Selection Tables

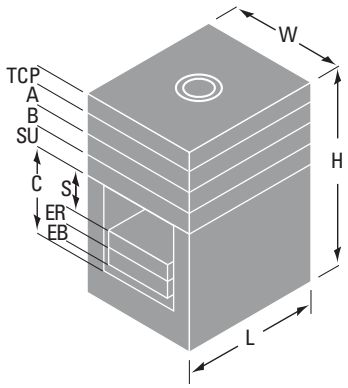

Variables

Below is a list of the variables for the Edge series mold bases and their definitions

W = Width
L = Length
TCP = Top clamp plate thickness
A = A plate thickness
B = B plate thickness
SU = Support plate thickness
C = Height of the riser
S = Maximum stroke of the ejector bar
H = Mold base height
EB = Ejector bar thickness
ER = Ejector retainer thickness
P = Housing riser thickness
RPx = Return pin location on the X axis (3 places)
RPy = Return pin location on the Y axis (4 places)
RPos = Return pin offset on the X axis (1 place)
RPg = Return pin diameter
LPg = Leader pin diameter

13.375 × 23.500

ITEM NUMBER	W	L	A	B	C	S	H	WEIGHT (LBS)
EDA1323-17-17	13.375	23.500	1.875	1.875	3.000	1.063	10.875	881
EDA1323-23-23	13.375	23.500	2.375	2.375	3.500	1.563	12.375	982
EDA1323-27-27	13.375	23.500	2.875	2.875	4.000	2.063	13.875	1084

All Items	W	13.375	EB	1.125	P	1.875	TCP	1.375	RPx	10.875	RPg	0.750
	L	23.500	ER	0.625	SU	1.875	RPos	10.750	RPy	3.813	LPg	1.000

14.875 × 17.875

ITEM NUMBER	W	L	A	B	C	S	H	WEIGHT (LBS)
EDA1518-17-17	14.875	17.875	1.875	1.875	3.500	1.563	11.875	790
EDA1518-23-23	14.875	17.875	2.375	2.375	3.500	1.563	12.875	865
EDA1518-27-27	14.875	17.875	2.875	2.875	4.000	2.063	14.375	950

All Items	W	14.875	EB	1.125	P	1.875	TCP	1.375	RPx	8.063	RPg	0.750
	L	17.875	ER	0.625	SU	2.375	RPos	7.938	RPy	3.875	LPg	1.250

14.875 × 23.750

ITEM NUMBER	W	L	A	B	C	S	H	WEIGHT (LBS)
EDA1524-17-17	14.875	23.750	1.875	1.875	3.500	1.563	11.875	1050
EDA1524-23-23	14.875	23.750	2.375	2.375	3.500	1.563	12.875	1150
EDA1524-27-27	14.875	23.750	2.875	2.875	4.000	2.063	14.375	1262

All Items	W	14.875	EB	1.125	P	1.875	TCP	1.375	RPx	11.000	RPg	0.750
	L	23.750	ER	0.625	SU	2.375	RPos	10.875	RPy	3.875	LPg	1.250

15.875 × 16.000

ITEM NUMBER	W	L	A	B	C	S	H	WEIGHT (LBS)
EDA1616-23-23	15.875	16.000	2.375	2.375	3.500	1.563	12.875	825
EDA1616-27-27	15.875	16.000	2.875	2.875	4.000	2.063	14.375	906

All Items	W	15.875	EB	1.125	P	1.875	TCP	1.375	RPx	7.125	RPg	0.750
	L	16.000	ER	0.625	SU	2.375	RPos	7.000	RPy	4.375	LPg	1.250

15.875 × 20.000

ITEM NUMBER	W	L	A	B	C	S	H	WEIGHT (LBS)
EDA1620-23-23	15.875	20.000	2.375	2.375	3.500	1.563	12.875	1031
EDA1620-27-27	15.875	20.000	2.875	2.875	4.000	2.063	14.375	1132

All Items	W	15.875	EB	1.125	P	1.875	TCP	1.375	RPx	9.125	RPg	0.750
	L	20.000	ER	0.625	SU	2.375	RPos	9.000	RPy	4.375	LPg	1.250

15.875 × 23.500

ITEM NUMBER	W	L	A	B	C	S	H	WEIGHT (LBS)
EDA1623-23-23	15.875	23.500	2.375	2.375	3.500	1.563	12.875	1212
EDA1623-27-27	15.875	23.500	2.875	2.875	4.000	2.063	14.375	1330

All Items	W	15.875	EB	1.125	P	1.875	TCP	1.375	RPx	10.875	RPg	0.750
	L	23.500	ER	0.625	SU	2.375	RPos	10.750	RPy	4.375	LPg	1.250

DME Edge Pre-Pocketed Mold Bases

STANDARD WITH THRU POCKETS AND TOP INTERLOCKS

Available in the Most Popular Mold Base Sizes

7.875 x 7.875

ITEM NUMBER	THRU POCKET SIZE	INTERLOCKS INSTALLED
EDA0808-13-13-3-PT	4.500 X 4.500 Pocket Tolerance +/- .001	(4) BGT1250
EDA0808-17-17-3-PT		
EDA0808-23-23-3-PT		

W	L	A	B	C	S	H
7.875	7.875	1.375	1.375	2.500	0.813	8.875
7.875	7.875	1.875	1.875	2.500	0.813	9.875
7.875	7.875	2.375	2.375	3.000	1.313	11.375

EB	ER	P	SU	TCP	RPOS	RPX	RPY	RPG	LPG
1.000	0.500	1.250	1.375	1.375	3.188	3.313	1.500	0.500	0.750

9.875 x 8.000

ITEM NUMBER	THRU POCKET SIZE	INTERLOCKS INSTALLED
EDA1008-13-13-3-PT	6.000 X 5.000 Pocket Tolerance +/- .001	(4) BGT1250
EDA1008-17-17-3-PT		
EDA1008-23-23-3-PT		

W	L	A	B	C	S	H
9.875	8	1.375	1.375	2.500	0.813	9.375
9.875	8	1.875	1.875	3.500	1.813	11.375
9.875	8	2.375	2.375	3.500	1.813	12.375

EB	ER	P	SU	TCP	RPOS	RPX	RPY	RPG	LPG
1.000	0.500	1.438	1.875	1.375	3.125	3.250	2.250	0.625	0.750

9.875 x 11.875

ITEM NUMBER	THRU POCKET SIZE	INTERLOCKS INSTALLED
EDA1012-13-13-3-PT	6.500 X 8.000 Pocket Tolerance +/- .001	(4) BGT1250
EDA1012-17-17-3-PT		
EDA1012-23-23-3-PT		

W	L	A	B	C	S	H
9.875	11.875	1.375	1.375	3.000	1.312	9.875
9.875	11.875	1.875	1.875	3.500	1.813	11.375
9.875	11.875	2.375	2.375	3.500	1.813	12.375

EB	ER	P	SU	TCP	RPOS	RPX	RPY	RPG	LPG
1.000	0.500	1.438	1.875	1.375	5.063	5.188	2.250	0.625	0.875

DME Edge Pre-Pocketed Mold Bases

STANDARD WITH THRU POCKETS AND TOP INTERLOCKS

Available in the Most Popular Mold Base Sizes

11.875 x 12.000

ITEM NUMBER	THRU POCKET SIZE	INTERLOCKS INSTALLED
EDA1212-13-13-3-PT	8.000 X 8.000 Pocket Tolerance +/- .001	(4) BGT1250
EDA1212-17-17-3-PT		
EDA1212-23-23-3-PT		

W	L	A	B	C	S	H
11.875	12.000	1.375	1.375	3.000	1.188	9.875
11.875	12.000	1.875	1.875	3.000	1.188	10.875
11.875	12.000	2.375	2.375	3.500	1.688	12.375

EB	ER	P	SU	TCP	RPOS	RPX	RPY	RPG	LPG
1.125	0.500	1.688	1.875	1.375	5.000	5.125	3.188	0.750	1.000

11.875 x 15.000

ITEM NUMBER	THRU POCKET SIZE	INTERLOCKS INSTALLED
EDA1215-13-13-3-PT	8.000 X 10.000 Pocket Tolerance +/- .001	(4) BGT1250
EDA1215-17-17-3-PT		
EDA1215-23-23-3-PT		

W	L	A	B	C	S	H
11.875	15.000	1.375	1.375	3.000	1.188	9.875
11.875	15.000	1.875	1.875	3.000	1.188	10.875
11.875	15.000	2.375	2.375	3.500	1.688	12.375

EB	ER	P	SU	TCP	RPOS	RPX	RPY	RPG	LPG
1.125	0.500	1.688	1.875	1.375	6.500	6.625	3.188	0.075	1.000

Variables for the Edge Series Mold Base with their definitions:

W = Width
L = Length
TCP = Top clamp plate thickness
A = A plate thickness
B = B Plate thickness
SU = Support plate thickness
C = Height of the riser
S = Maximum stroke of the ejector bar
H = Mold base height

EB = Ejector bar thickness
ER = Ejector retainer thickness
P = Housing riser thickness
RPx = Return pin location on X axis (3 places)
Rpy = Return pin location on Y axis (4 places)
RPos = Return pin offset on the X axis (1 place)
RPg = Return pin diameter
LPg = Leader pin diameter

Get the Edge with DME Mold Components

DME innovation has been vital to the development of mold technologies ever since standardized DME mold base offerings were created in the 1940s to enable moldmakers to focus their creativity on value-added core and cavity work. New DME mold components continue to be developed to complement your Edge mold base, or any DME mold base, for that matter.

Here are just a few of the mold components that will give your DME mold base the edge:

Pins, sleeves and blades
A comprehensive line of pins, sleeves and blades – in Inch, DIN and JIS standards – all of which undergo rigorous DME quality assurance testing, are available at competitive prices with fast delivery. From straight, shoulder or keyed ejector pins to nitrided ejector sleeves and close-tolerance ejector blades to core pins, return pins and sprue puller pins, DME products match your application needs.

Sprue bushings and locating rings
A wide range of DME hardened, ground and polished sprue bushings and more than a dozen locating ring options are available for maximum production performance.

Mold interlocks
For precise alignment of mold halves, mold plates or individual cavities or cores, DME mold interlocks are a perfect fit for all of your applications. From the innovative IN2 interlocks that offer interchangeable inserts to a variety of side, top, round and rectangular interlocks, DME products eliminate your mold alignment concerns.

Thousands of other mold components to complement your mold base selection
DME market-leading mold technologies are available around the globe, with many choices within hundreds of product lines. Our proven knowledge and expertise has made DME the preferred supplier to many of the world's leading companies. Check out the DME Mold Components Catalog for the products that match your application needs.

DME Quick Delivery Standards

THOUSANDS OF MOLD BASE CONFIGURATIONS READY TO SHIP AS SOON AS TODAY!

Quick Delivery Standards Benefits

The QDS Advantage

- More than 3,800 popular mold base combinations available in 3 or 4 days or less
- Includes comparably sized retainer sets and mold plates
- Includes DME #7 stainless steel in the A-Series mold base program (all plates and housing are stainless steel)

Call 800-626-6653 (800-387-6600 in Canada) by noon for guaranteed shipment.

The DME Quick Delivery Standards (QDS™) program has expanded to offer even more sizes of mold bases, retainer sets and mold plates on a same-day, next-day, three-day or four-day basis.

Same-Day and Next-Day Shipments

The same-day and next-day shipment programs now offer 340 of the most popular A-Series mold bases in addition to rotary ground mold (RGM) plates of comparable size and thickness.

Three-Day Shipment

The new selection of three-day shipment A-Series or B-Series mold bases, cavity retainer sets, and finished or rotary ground mold plates now includes nearly 4,000 combinations.

Four-Day Shipment

The QDS program now includes A-Series mold bases in DME #7 stainless steel available in four-day shipment.

With the ever-growing need for just-in-time deliveries, this expansion of the DME QDS program can greatly enhance your competitive edge.

NOTE: A and B Series Mold Bases include:
- Optional 1-3/8 clamp plates where applicable
- Ejector bar same length as mold base
- Any standard leader pin length desired

Same-Day Shipment

A-Series Mold Bases

ITEM NUMBER	STANDARD CLAMP PLATE			OPTIONAL 1-3/8 CLAMP PLATE		
	STEEL			STEEL		
88A-7-7	1	—	—	—	2	—
88A-13-13	1	2	—	—	2	—
812A-13-13	1	2	—	—	2	—
108A-13-13	—	2	—	—	—	—

Supplied with catalog standard riser height (C) and leader pin length (A+B+1/2").

Next-Day Shipments

A-Series Mold Bases
(and Rotary Ground Mold Plates)*

***Key for Ordering Rotary Ground Mold Plates:**
Rotary ground mold plates are available in sizes and DME steel types shown. Add "RGM" to end of item number and delete "A" (example: 88A-17-27 becomes 88-17RGM or 88-27RGM depending on thickness desired).

7 7/8 x 7 7/8

ITEM NO.	STEEL			ITEM NO.	STEEL			ITEM NO.	STEEL			ITEM NO.	STEEL			ITEM NO.	STEEL			ITEM NO.	STEEL		
88A-7-7	1	2	3	88A-13-7	1	2	3	88A-17-7	1	2	3	88A-23-7	1	2	3	88A-27-7	–	2	–	88A-33-7	–	2	–
88A-7-13	1	2	3	88A-13-13	1	2	3	88A-17-13	1	2	3	88A-23-13	1	2	3	88A-27-13	–	2	–	88A-33-13	–	2	–
88A-7-17	1	2	3	88A-13-17	1	2	3	88A-17-17	1	2	3	88A-23-17	1	2	3	88A-27-17	–	2	–	88A-33-17	–	2	–
88A-7-23	1	2	3	88A-13-23	1	2	3	88A-17-23	1	2	3	88A-23-23	1	2	3	88A-27-23	–	2	–	88A-33-23	–	2	–
88A-7-27	1	2	3	88A-13-27	1	2	3	88A-17-27	1	2	3	88A-23-27	1	2	3	88A-27-27	–	2	–	88A-33-27	–	2	–
																88A-27-33	–	2	–				

7 7/8 x 11 7/8

ITEM NO.	STEEL			ITEM NO.	STEEL			ITEM NO.	STEEL			ITEM NO.	STEEL			ITEM NO.	STEEL		
812A-7-7	1	2	3	812A-13-7	1	2	3	812A-17-7	1	2	3	812A-23-7	1	2	3	812A-27-7	1	2	–
812A-7-13	1	2	3	812A-13-13	1	2	3	812A-17-13	1	2	3	812A-23-13	1	2	3	812A-27-13	1	2	–
812A-7-17	1	2	3	812A-13-17	1	2	3	812A-17-17	1	2	3	812A-23-17	1	2	3	812A-27-17	1	2	–
812A-7-23	1	2	3	812A-13-23	1	2	3	812A-17-23	1	2	3	812A-23-23	1	2	3	812A-27-23	1	2	–
812A-7-27	1	2	–	812A-13-27	1	2	–	812A-17-27	1	2	–	812A-23-27	1	2	–	812A-27-27	1	2	–

NOTE: Item numbers printed in blue indicate A-Series Mold Bases available same day in at least one DME steel type shown (see page 26).

9 7/8 x 8"

ITEM NO.	STEEL			ITEM NO.	STEEL			ITEM NO.	STEEL			ITEM NO.	STEEL		
108A-7-7	1	2	3	108A-13-7	1	2	3	108A-17-7	1	2	3	108A-23-7	–	2	3
108A-7-13	1	2	3	108A-13-13	1	2	3	108A-17-13	1	2	3	108A-23-13	–	2	3
108A-7-17	1	2	3	108A-13-17	1	2	3	108A-17-17	1	2	3	108A-23-17	–	2	3
108A-7-23	–	2	3	108A-13-23	–	2	3	108A-17-23	–	2	3	108A-23-23	–	2	3
108A-7-27	–	2	3	108A-13-27	–	2	3	108A-17-27	–	2	3	108A-23-27	–	2	3

11 7/8 x 12"

ITEM NO.	STEEL		ITEM NO.	STEEL		ITEM NO.	STEEL		ITEM NO.	STEEL	
1212A-7-7	1	2	1212A-13-7	1	2	1212A-17-7	1	2	1212A-23-7	1	2
1212A-7-13	1	2	1212A-13-13	1	2	1212A-17-13	1	2	1212A-23-13	1	2
1212A-7-17	1	2	1212A-13-17	1	2	1212A-17-17	1	2	1212A-23-17	1	2
1212A-7-23	1	2	1212A-13-23	1	2	1212A-17-23	1	2	1212A-23-23	1	2
1212A-7-27	–	2	1212A-13-27	–	2	1212A-17-27	–	2	1212A-23-27	–	2

9 7/8 x 11 7/8

ITEM NO.	STEEL			ITEM NO.	STEEL			ITEM NO.	STEEL			ITEM NO.	STEEL			ITEM NO.	STEEL		
1012A-7-7	1	2	3	1012A-13-7	1	2	3	1012A-17-7	1	2	3	1012A-23-7	1	2	3	1012A-27-7	1	2	3
1012A-7-13	1	2	3	1012A-13-13	1	2	3	1012A-17-13	1	2	3	1012A-23-13	1	2	3	1012A-27-13	1	2	3
1012A-7-17	1	2	3	1012A-13-17	1	2	3	1012A-17-17	1	2	3	1012A-23-17	1	2	3	1012A-27-17	1	2	3
1012A-7-23	1	2	3	1012A-13-23	1	2	3	1012A-17-23	1	2	3	1012A-23-23	1	2	3	1012A-27-23	1	2	3
1012A-7-27	1	2	3	1012A-13-27	1	2	3	1012A-17-27	1	2	3	1012A-23-27	1	2	3	1012A-27-27	1	2	3

11 7/8 x 20"

ITEM NO.	STEEL
1220A-27-13	2
1220A-27-17	2

9 7/8 x 16"

ITEM NO.	STEEL			ITEM NO.	STEEL			ITEM NO.	STEEL			ITEM NO.	STEEL		
1016A-7-7	1	2	–	1016A-13-7	1	2	–	1016A-17-7	1	2	–	1016A-23-7	1	2	–
1016A-7-13	1	2	3	1016A-13-13	1	2	3	1016A-17-13	1	2	3	1016A-23-13	1	2	–
1016A-7-17	1	2	3	1016A-13-17	1	2	3	1016A-17-17	1	2	3	1016A-23-17	1	2	–
1016A-7-23	1	2	3	1016A-13-23	1	2	3	1016A-17-23	1	2	3	1016A-23-23	1	2	–
1016A-7-27	1	2	3	1016A-13-27	1	2	3	1016A-17-27	1	2	3	1016A-23-27	1	2	–

11 7/8 x 15"

ITEM NO.	STEEL		ITEM NO.	STEEL		ITEM NO.	STEEL		ITEM NO.	STEEL	
1215A-7-7	1	2	1215A-13-7	1	2	1215A-17-7	1	2	1215A-23-7	1	2
1215A-7-13	1	2	1215A-13-13	1	2	1215A-17-13	1	2	1215A-23-13	1	2
1215A-7-17	1	2	1215A-13-17	1	2	1215A-17-17	1	2	1215A-23-17	1	2
1215A-7-23	1	2	1215A-13-23	1	2	1215A-17-23	1	2	1215A-23-23	1	2
1215A-7-27	–	2	1215A-13-27	–	2	1215A-17-27	–	2	1215A-23-27	–	2

10 7/8 x 12"

ITEM NO.	STEEL		ITEM NO.	STEEL		ITEM NO.	STEEL		ITEM NO.	STEEL	
1112A-7-7	1	2	1112A-13-7	1	2	1112A-17-7	1	2	1112A-23-7	1	2
1112A-7-13	1	2	1112A-13-13	1	2	1112A-17-13	1	2	1112A-23-13	1	2
1112A-7-17	1	2	1112A-13-17	1	2	1112A-17-17	1	2	1112A-23-17	1	2
1112A-7-23	1	2	1112A-13-23	1	2	1112A-17-23	1	2	1112A-23-23	1	2

13 3/8 x 15"

ITEM NO.	STEEL			ITEM NO.	STEEL			ITEM NO.	STEEL			ITEM NO.	STEEL		
1315A-13-13	1	2	3	1315A-17-13	1	2	3	1315A-23-13	1	2	3	1315A-27-13	1	2	3
1315A-13-17	1	2	3	1315A-17-17	1	2	3	1315A-23-17	1	2	3	1315A-27-17	1	2	3
1315A-13-23	1	2	3	1315A-17-23	1	2	3	1315A-23-23	1	2	3	1315A-27-23	1	2	3
1315A-13-27	1	2	3	1315A-17-27	1	2	3	1315A-23-27	1	2	3	1315A-27-27	1	2	3

10 7/8 x 14"

ITEM NO.	STEEL		ITEM NO.	STEEL		ITEM NO.	STEEL		ITEM NO.	STEEL	
1114A-7-7	1	2	1114A-13-7	1	2	1114A-17-7	1	2	1114A-23-7	1	2
1114A-7-13	1	2	1114A-13-13	1	2	1114A-17-13	1	2	1114A-23-13	1	2
1114A-7-17	1	2	1114A-13-17	1	2	1114A-17-17	1	2	1114A-23-17	1	2
1114A-7-23	1	2	1114A-13-23	1	2	1114A-17-23	1	2	1114A-23-23	1	2
1114A-7-27	–	2	1114A-13-27	–	2	1114A-17-27	–	2	1114A-23-27	–	2

13 3/8 x 18"

ITEM NO.	STEEL			ITEM NO.	STEEL			ITEM NO.	STEEL			ITEM NO.	STEEL		
1318A-13-13	1	2	3	1318A-17-13	1	2	3	1318A-23-13	1	2	3	1318A-27-7	1	2	–
1318A-13-17	1	2	3	1318A-17-17	1	2	3	1318A-23-17	1	2	3	1318A-27-13	1	2	–
1318A-13-23	1	2	3	1318A-17-23	1	2	3	1318A-23-23	1	2	3	1318A-27-17	1	2	–
1318A-13-27	1	2	–	1318A-17-27	1	2	–	1318A-23-27	1	2	–	1318A-27-23	1	2	–
												1318A-27-27	2	2	–

10 7/8 x 18"

ITEM NO.	STEEL		ITEM NO.	STEEL		ITEM NO.	STEEL		ITEM NO.	STEEL	
1118A-7-7	1	2	1118A-13-7	1	2	1118A-17-7	1	2	1118A-23-7	1	2
1118A-7-13	1	2	1118A-13-13	1	2	1118A-17-13	1	2	1118A-23-13	1	2
1118A-7-17	1	2	1118A-13-17	1	2	1118A-17-17	1	2	1118A-23-17	1	2
1118A-7-23	1	2	1118A-13-23	1	2	1118A-17-23	1	2	1118A-23-23	1	2
1118A-7-27	–	2	1118A-13-27	–	2	1118A-17-27	–	2	1118A-23-27	–	2

13 3/8 x 20 3/4

ITEM NO.	STEEL
1321A-13-17	2

14 7/8 x 17 7/8

ITEM NO.	STEEL
1518A-13-17	2
1518A-13-23	2
1518A-17-17	2
1518A-17-23	2

15 7/8 x 16

ITEM NO.	STEEL
1616A-13-13	2
1616A-13-17	2
1616A-13-23	2
1616A-17-13	2
1616A-17-17	2
1616A-17-23	2

15 7/8 x 20

ITEM NO.	STEEL
1620A-17-17	2
1620A-17-23	2

Three-Day Shipments

A-Series Mold Bases

(B-Series, Retainer Sets, Mold Plates)**

NOTE: Item numbers printed in blue indicate A-Series Mold Bases available next day in at least one DME steel type shown (see page 26).

7 7/8 x 7 7/8

ITEM NO.	STEEL				ITEM NO.	STEEL				ITEM NO.	STEEL				ITEM NO.	STEEL				ITEM NO.	STEEL				ITEM NO.	STEEL			
88A-7-7	1	2	3	7	88A-13-7	1	2	3	7	88A-17-7	1	2	3	7	88A-23-7	1	2	3	7	88A-27-7	1	2	3	7	88A-33-7	–	2	–	–
88A-7-13	1	2	3	7	88A-13-13	1	2	3	7	88A-17-13	1	2	3	7	88A-23-13	1	2	3	7	88A-27-13	1	2	3	7	88A-33-13	–	2	–	–
88A-7-17	1	2	3	7	88A-13-17	1	2	3	7	88A-17-17	1	2	3	7	88A-23-17	1	2	3	7	88A-27-17	1	2	3	7	88A-33-17	–	2	–	–
88A-7-23	1	2	3	7	88A-13-23	1	2	3	7	88A-17-23	1	2	3	7	88A-23-23	1	2	3	7	88A-27-23	1	2	3	7	88A-33-23	–	2	–	–
88A-7-27	1	2	3	7	88A-13-27	1	2	3	7	88A-17-27	1	2	3	7	88A-23-27	1	2	3	7	88A-27-27	1	2	3	7	88A-33-27	–	2	–	–
88A-7-33	–	2	–	–	88A-13-33	–	2	–	–	88A-17-33	–	2	–	–	88A-23-33	–	2	–	–	88A-27-33	–	2	–	–	88A-33-33	–	2	–	–

7 7/8 x 11 7/8

ITEM NO.	STEEL				ITEM NO.	STEEL				ITEM NO.	STEEL				ITEM NO.	STEEL				ITEM NO.	STEEL				ITEM NO.	STEEL				ITEM NO.	STEEL			
812A-7-7	1	2	3	7	812A-13-7	1	2	3	7	812A-17-7	1	2	3	7	812A-23-7	1	2	3	7	812A-27-7	1	2	3	7	812A-33-7	1	2	–	–	812A-37-7	–	2	–	–
812A-7-13	1	2	3	7	812A-13-13	1	2	3	7	812A-17-13	1	2	3	7	812A-23-13	1	2	3	7	812A-27-13	1	2	3	7	812A-33-13	1	2	–	–	812A-37-13	–	2	–	–
812A-7-17	1	2	3	7	812A-13-17	1	2	3	7	812A-17-17	1	2	3	7	812A-23-17	1	2	3	7	812A-27-17	1	2	3	7	812A-33-17	1	2	–	–	812A-37-17	–	2	–	–
812A-7-23	1	2	3	7	812A-13-23	1	2	3	7	812A-17-23	1	2	3	7	812A-23-23	1	2	3	7	812A-27-23	1	2	3	7	812A-33-23	1	2	–	–	812A-37-23	–	2	–	–
812A-7-27	1	2	3	7	812A-13-27	1	2	3	7	812A-17-27	1	2	3	7	812A-23-27	1	2	3	7	812A-27-27	1	2	3	7	812A-33-27	1	2	–	–	812A-37-27	–	2	–	–
812A-7-33	1	2	–	–	812A-13-33	1	2	–	–	812A-17-33	1	2	–	–	812A-23-33	1	2	–	–	812A-27-33	1	2	–	–	812A-33-33	1	2	–	–	812A-37-33	–	2	–	–
812A-7-37	–	2	–	–	812A-13-37	–	2	–	–	812A-17-37	–	2	–	–	812A-23-37	–	2	–	–	812A-27-37	–	2	–	–	812A-33-37	–	2	–	–	812A-37-37	–	2	–	–

9 7/8 x 8"

ITEM NO.	STEEL				ITEM NO.	STEEL				ITEM NO.	STEEL				ITEM NO.	STEEL				ITEM NO.	STEEL				ITEM NO.	STEEL			
108A-7-7	1	2	3	7	108A-13-7	1	2	3	7	108A-17-7	1	2	3	7	108A-23-7	1	2	3	7	108A-27-7	–	2	3	7	108A-33-7	–	2	–	–
108A-7-13	1	2	3	7	108A-13-13	1	2	3	7	108A-17-13	1	2	3	7	108A-23-13	1	2	3	7	108A-27-13	–	2	3	7	108A-33-13	–	2	–	–
108A-7-17	1	2	3	7	108A-13-17	1	2	3	7	108A-17-17	1	2	3	7	108A-23-17	1	2	3	7	108A-27-17	–	2	3	7	108A-33-17	–	2	–	–
108A-7-23	1	2	3	7	108A-13-23	1	2	3	7	108A-17-23	1	2	3	7	108A-23-23	1	2	3	7	108A-27-23	–	2	3	7	108A-33-23	–	2	–	–
108A-7-27	–	2	3	7	108A-13-27	–	2	3	7	108A-17-27	–	2	3	7	108A-23-27	–	2	3	7	108A-27-27	–	2	3	7	108A-33-27	–	2	–	–
108A-7-33	–	2	–	–	108A-13-33	–	2	–	–	108A-17-33	–	2	–	–	108A-23-33	–	2	–	–	108A-27-33	–	2	–	–	108A-33-33	–	2	–	–

9 7/8 x 11 7/8

ITEM NO.	STEEL				ITEM NO.	STEEL				ITEM NO.	STEEL				ITEM NO.	STEEL				ITEM NO.	STEEL				ITEM NO.	STEEL				ITEM NO.	STEEL			
1012A-7-7	1	2	3	7	1012A-13-7	1	2	3	7	1012A-17-7	1	2	3	7	1012A-23-7	1	2	3	7	1012A-27-7	1	2	3	7	1012A-33-7	1	2	3	–	1012A-37-7	–	2	3	–
1012A-7-13	1	2	3	7	1012A-13-13	1	2	3	7	1012A-17-13	1	2	3	7	1012A-23-13	1	2	3	7	1012A-27-13	1	2	3	7	1012A-33-13	1	2	3	–	1012A-37-13	–	2	3	–
1012A-7-17	1	2	3	7	1012A-13-17	1	2	3	7	1012A-17-17	1	2	3	7	1012A-23-17	1	2	3	7	1012A-27-17	1	2	3	7	1012A-33-17	1	2	3	–	1012A-37-17	–	2	3	–
1012A-7-23	1	2	3	7	1012A-13-23	1	2	3	7	1012A-17-23	1	2	3	7	1012A-23-23	1	2	3	7	1012A-27-23	1	2	3	7	1012A-33-23	1	2	3	–	1012A-37-23	–	2	3	–
1012A-7-27	1	2	3	7	1012A-13-27	1	2	3	7	1012A-17-27	1	2	3	7	1012A-23-27	1	2	3	7	1012A-27-27	1	2	3	7	1012A-33-27	1	2	3	–	1012A-37-27	–	2	3	–
1012A-7-33	1	2	3	–	1012A-13-33	1	2	3	–	1012A-17-33	1	2	3	–	1012A-23-33	1	2	3	–	1012A-27-33	1	2	3	–	1012A-33-33	1	2	3	–	1012A-37-33	–	2	3	–
1012A-7-37	–	2	3	–	1012A-13-37	–	2	3	–	1012A-17-37	–	2	3	–	1012A-23-37	–	2	3	–	1012A-27-37	–	2	3	–	1012A-33-37	–	2	3	–	1012A-37-37	–	2	3	–

9 7/8 x 16"

ITEM NO.	STEEL				ITEM NO.	STEEL				ITEM NO.	STEEL				ITEM NO.	STEEL				ITEM NO.	STEEL				ITEM NO.	STEEL				ITEM NO.	STEEL			
1016A-7-7	1	2	3	7	1016A-13-7	1	2	3	7	1016A-17-7	1	2	3	7	1016A-23-7	1	2	3	7	1016A-27-7	1	2	3	7	1016A-33-7	–	2	–	–	1016A-37-7	–	2	–	–
1016A-7-13	1	2	3	7	1016A-13-13	1	2	3	7	1016A-17-13	1	2	3	7	1016A-23-13	1	2	3	7	1016A-27-13	1	2	3	7	1016A-33-13	–	2	–	–	1016A-37-13	–	2	–	–
1016A-7-17	1	2	3	7	1016A-13-17	1	2	3	7	1016A-17-17	1	2	3	7	1016A-23-17	1	2	3	7	1016A-27-17	1	2	3	7	1016A-33-17	–	2	–	–	1016A-37-17	–	2	–	–
1016A-7-23	1	2	3	7	1016A-13-23	1	2	3	7	1016A-17-23	1	2	3	7	1016A-23-23	1	2	3	7	1016A-27-23	1	2	3	7	1016A-33-23	–	2	–	–	1016A-37-23	–	2	–	–
1016A-7-27	1	2	3	7	1016A-13-27	1	2	3	7	1016A-17-27	1	2	3	7	1016A-23-27	1	2	3	7	1016A-27-27	1	2	3	7	1016A-33-27	–	2	–	–	1016A-37-27	–	2	–	–
1016A-7-33	–	2	–	–	1016A-13-33	–	2	–	–	1016A-17-33	–	2	–	–	1016A-23-33	–	2	–	–	1016A-27-33	–	2	–	–	1016A-33-33	–	2	–	–	1016A-37-33	–	2	–	–
1016A-7-37	–	2	–	–	1016A-13-37	–	2	–	–	1016A-17-37	–	2	–	–	1016A-23-37	–	2	–	–	1016A-27-37	–	2	–	–	1016A-33-37	–	2	–	–	1016A-37-37	–	2	–	–

9 7/8 x 20"

ITEM NO.	STEEL				ITEM NO.	STEEL				ITEM NO.	STEEL				ITEM NO.	STEEL				ITEM NO.	STEEL				ITEM NO.	STEEL			
1020A-7-7	1	2	3	7	1020A-13-7	1	2	3	7	1020A-17-7	1	2	3	7	1020A-23-7	–	2	–	7	1020A-27-7	–	2	–	7	1020A-33-7	–	2	–	–
1020A-7-13	1	2	3	7	1020A-13-13	1	2	3	7	1020A-17-13	1	2	3	7	1020A-23-13	–	2	–	7	1020A-27-13	–	2	–	7	1020A-33-13	–	2	–	–
1020A-7-17	1	2	3	7	1020A-13-17	1	2	3	7	1020A-17-17	1	2	3	7	1020A-23-17	–	2	–	7	1020A-27-17	–	2	–	7	1020A-33-17	–	2	–	–
1020A-7-23	–	2	–	7	1020A-13-23	–	2	–	7	1020A-17-23	–	2	–	7	1020A-23-23	–	2	–	7	1020A-27-23	–	2	–	7	1020A-33-23	–	2	–	–
1020A-7-27	–	2	–	7	1020A-13-27	–	2	–	7	1020A-17-27	–	2	–	7	1020A-23-27	–	2	–	7	1020A-27-27	–	2	–	7	1020A-33-27	–	2	–	–
1020A-7-33	–	2	–	–	1020A-13-33	–	2	–	–	1020A-17-33	–	2	–	–	1020A-23-33	–	2	–	–	1020A-27-33	–	2	–	–	1020A-33-33	–	2	–	–

*Three-day shipment for DME #1, #2 and #3 steel types. Four-day shipment for DME #7 stainless steel.

****Key for Ordering B-Series, Retainer Sets and Mold Plates:**

For B-Series Mold Bases: Replace "A" in item number with "B" (minimum "A" plate in "B" series mold base is 1-7/8; minimum "B" plate is 7/8). Example: 88B-23-13

For Cavity Retainer Sets: Delete "A" from item number shown. Example: 88-23-13

For Finish Ground Mold Plates: Delete "A" and indicate plate thickness. Example: 88-23

For Rotary Ground Mold Plates: Delete "A" and indicate plate thickness plus "RGM." Example: 88-23RGM

Plate Thickness Codes: 7 = 7/8, 13 = 1-3/8, 27 = 2-7/8, etc.

Three-Day Shipments

A-Series Mold Bases

(B-Series, Retainer Sets, Mold Plates)**

NOTE: Item numbers printed in blue indicate A-Series Mold Bases available next day in at least one DME steel type shown (see page 26).

10 7/8 x 12"

ITEM NO.	STEEL				ITEM NO.	STEEL				ITEM NO.	STEEL				ITEM NO.	STEEL				ITEM NO.	STEEL				ITEM NO.	STEEL			
1112A-7-7	1	2	3	7	1112A-13-7	1	2	3	7	1112A-17-7	1	2	3	7	1112A-23-7	1	2	3	7	1112A-27-7	–	2	3	7	1112A-33-7	–	2	–	–
1112A-7-13	1	2	3	7	1112A-13-13	1	2	3	7	1112A-17-13	1	2	3	7	1112A-23-13	1	2	3	7	1112A-27-13	–	2	3	7	1112A-33-13	–	2	–	–
1112A-7-17	1	2	3	7	1112A-13-17	1	2	3	7	1112A-17-17	1	2	3	7	1112A-23-17	1	2	3	7	1112A-27-17	–	2	3	7	1112A-33-17	–	2	–	–
1112A-7-23	1	2	–	7	1112A-13-23	1	2	3	7	1112A-17-23	1	2	3	7	1112A-23-23	1	2	3	7	1112A-27-23	–	2	3	7	1112A-33-23	–	2	–	–
1112A-7-27	–	2	3	7	1112A-13-27	–	2	3	7	1112A-17-27	–	2	3	7	1112A-23-27	–	2	3	7	1112A-27-27	–	2	3	7	1112A-33-27	–	2	–	–
1112A-7-33	–	2	–	–	1112A-13-33	–	2	–	–	1112A-17-33	–	2	–	–	1112A-23-33	–	2	–	–	1112A-27-33	–	2	–	–	1112A-33-33	–	2	–	–

10 7/8 x 14"

ITEM NO.	STEEL				ITEM NO.	STEEL				ITEM NO.	STEEL				ITEM NO.	STEEL				ITEM NO.	STEEL				ITEM NO.	STEEL				ITEM NO.	STEEL			
1114A-7-7	1	2	3	7	1114A-13-7	1	2	3	7	1114A-17-7	1	2	3	7	1114A-23-7	1	2	3	7	1114A-27-7	1	2	3	7	1114A-33-7	–	2	–	–	1114A-37-7	–	2	–	–
1114A-7-13	1	2	3	7	1114A-13-13	1	2	3	7	1114A-17-13	1	2	3	7	1114A-23-13	1	2	3	7	1114A-27-13	1	2	3	7	1114A-33-13	–	2	–	–	1114A-37-13	–	2	–	–
1114A-7-17	1	2	3	7	1114A-13-17	1	2	3	7	1114A-17-17	1	2	3	7	1114A-23-17	1	2	3	7	1114A-27-17	1	2	3	7	1114A-33-17	–	2	–	–	1114A-37-17	–	2	–	–
1114A-7-23	1	2	3	7	1114A-13-23	1	2	3	7	1114A-17-23	1	2	3	7	1114A-23-23	1	2	3	7	1114A-27-23	1	2	3	7	1114A-33-23	–	2	–	–	1114A-37-23	–	2	–	–
1114A-7-27	1	2	3	7	1114A-13-27	1	2	3	7	1114A-17-27	1	2	3	7	1114A-23-27	1	2	3	7	1114A-27-27	1	2	3	7	1114A-33-27	–	2	–	–	1114A-37-27	–	2	–	–
1114A-7-33	–	2	–	–	1114A-13-33	–	2	–	–	1114A-17-33	–	2	–	–	1114A-23-33	–	2	–	–	1114A-27-33	–	2	–	–	1114A-33-33	–	2	–	–	1114A-37-33	–	2	–	–
1114A-7-37	–	2	–	–	1114A-13-37	–	2	–	–	1114A-17-37	–	2	–	–	1114A-23-37	–	2	–	–	1114A-27-37	–	2	–	–	1114A-33-37	–	2	–	–	1114A-37-37	–	2	–	–

10 7/8 x 18"

ITEM NO.	STEEL				ITEM NO.	STEEL				ITEM NO.	STEEL				ITEM NO.	STEEL				ITEM NO.	STEEL				ITEM NO.	STEEL				ITEM NO.	STEEL			
1118A-7-7	1	2	3	7	1118A-13-7	1	2	3	7	1118A-17-7	1	2	3	7	1118A-23-7	1	2	–	7	1118A-27-7	–	2	–	7	1118A-33-7	–	2	–	–	1118A-37-7	–	2	–	–
1118A-7-13	1	2	3	7	1118A-13-13	1	2	3	7	1118A-17-13	1	2	3	7	1118A-23-13	1	2	–	7	1118A-27-13	–	2	–	7	1118A-33-13	–	2	–	–	1118A-37-13	–	2	–	–
1118A-7-17	1	2	3	7	1118A-13-17	1	2	3	7	1118A-17-17	1	2	3	7	1118A-23-17	1	2	–	7	1118A-27-17	–	2	–	7	1118A-33-17	–	2	–	–	1118A-37-17	–	2	–	–
1118A-7-23	1	2	–	7	1118A-13-23	1	2	–	7	1118A-17-23	1	2	–	7	1118A-23-23	1	2	–	7	1118A-27-23	–	2	–	7	1118A-33-23	–	2	–	–	1118A-37-23	–	2	–	–
1118A-7-27	–	2	–	7	1118A-13-27	–	2	–	7	1118A-17-27	–	2	–	7	1118A-23-27	–	2	–	7	1118A-27-27	–	2	–	7	1118A-33-27	–	2	–	–	1118A-37-27	–	2	–	–
1118A-7-33	–	2	–	–	1118A-13-33	–	2	–	–	1118A-17-33	–	2	–	–	1118A-23-33	–	2	–	–	1118A-27-33	–	2	–	–	1118A-33-33	–	2	–	–	1118A-37-33	–	2	–	–
1118A-7-37	–	2	–	–	1118A-13-37	–	2	–	–	1118A-17-37	–	2	–	–	1118A-23-37	–	2	–	–	1118A-27-37	–	2	–	–	1118A-33-37	–	2	–	–	1118A-37-37	–	2	–	–

10 7/8 x 23 1/2

ITEM NO.	STEEL				ITEM NO.	STEEL				ITEM NO.	STEEL			
1123A-13-13	1	2	–	7	1123A-17-13	1	2	–	7	1123A-23-13	1	2	–	7
1123A-13-17	1	2	–	7	1123A-17-17	1	2	–	7	1123A-23-17	1	2	–	7
1123A-13-23	1	2	–	7	1123A-17-23	1	2	–	7	1123A-23-23	1	2	–	7

11 7/8 x 12"

ITEM NO.	STEEL				ITEM NO.	STEEL				ITEM NO.	STEEL				ITEM NO.	STEEL				ITEM NO.	STEEL				ITEM NO.	STEEL				ITEM NO.	STEEL			
1212A-7-7	1	2	3	7	1212A-13-7	1	2	3	7	1212A-17-7	1	2	3	7	1212A-23-7	1	2	3	7	1212A-27-7	1	2	3	7	1212A-33-7	–	2	–	–	1212A-37-7	–	2	–	–
1212A-7-13	1	2	3	7	1212A-13-13	1	2	3	7	1212A-17-13	1	2	3	7	1212A-23-13	1	2	3	7	1212A-27-13	1	2	3	7	1212A-33-13	–	2	3	–	1212A-37-13	–	2	–	–
1212A-7-17	1	2	3	7	1212A-13-17	1	2	3	7	1212A-17-17	1	2	3	7	1212A-23-17	1	2	3	7	1212A-27-17	1	2	3	7	1212A-33-17	–	2	3	–	1212A-37-17	–	2	–	–
1212A-7-23	1	2	3	7	1212A-13-23	1	2	3	7	1212A-17-23	1	2	3	7	1212A-23-23	1	2	3	7	1212A-27-23	1	2	3	7	1212A-33-23	–	2	3	–	1212A-37-23	–	2	–	–
1212A-7-27	1	2	3	7	1212A-13-27	1	2	3	7	1212A-17-27	1	2	3	7	1212A-23-27	1	2	3	7	1212A-27-27	1	2	3	7	1212A-33-27	–	2	3	–	1212A-37-27	–	2	–	–
1212A-7-33	–	2	3	–	1212A-13-33	–	2	3	–	1212A-17-33	–	2	3	–	1212A-23-33	–	2	3	–	1212A-27-33	–	2	3	–	1212A-33-33	–	2	3	–	1212A-37-33	–	2	–	–
1212A-7-37	–	2	–	–	1212A-13-37	–	2	–	–	1212A-17-37	–	2	–	–	1212A-23-37	–	2	–	–	1212A-27-37	–	2	–	–	1212A-33-37	–	2	–	–	1212A-37-37	–	2	–	–

11 7/8 x 15"

ITEM NO.	STEEL				ITEM NO.	STEEL				ITEM NO.	STEEL				ITEM NO.	STEEL				ITEM NO.	STEEL				ITEM NO.	STEEL				ITEM NO.	STEEL			
1215A-7-7	1	2	3	7	1215A-13-7	1	2	3	7	1215A-17-7	1	2	3	7	1215A-23-7	1	2	3	7	1215A-27-7	1	2	3	7	1215A-33-7	1	2	3	–	1215A-37-7	1	2	3	–
1215A-7-13	1	2	3	7	1215A-13-13	1	2	3	7	1215A-17-13	1	2	3	7	1215A-23-13	1	2	3	7	1215A-27-13	1	2	3	7	1215A-33-13	1	2	3	–	1215A-37-13	1	2	3	–
1215A-7-17	1	2	3	7	1215A-13-17	1	2	3	7	1215A-17-17	1	2	3	7	1215A-23-17	1	2	3	7	1215A-27-17	1	2	3	7	1215A-33-17	1	2	3	–	1215A-37-17	1	2	3	–
1215A-7-23	1	2	3	7	1215A-13-23	1	2	3	7	1215A-17-23	1	2	3	7	1215A-23-23	1	2	3	7	1215A-27-23	1	2	3	7	1215A-33-23	1	2	3	–	1215A-37-23	1	2	3	–
1215A-7-27	1	2	3	7	1215A-13-27	1	2	3	7	1215A-17-27	1	2	3	7	1215A-23-27	1	2	3	7	1215A-27-27	1	2	3	7	1215A-33-27	1	2	3	–	1215A-37-27	1	2	3	–
1215A-7-33	1	2	3	–	1215A-13-33	1	2	3	–	1215A-17-33	1	2	3	–	1215A-23-33	1	2	3	–	1215A-27-33	1	2	3	–	1215A-33-33	1	2	3	–	1215A-37-33	1	2	3	–
1215A-7-37	1	2	3	–	1215A-13-37	1	2	3	–	1215A-17-37	1	2	3	–	1215A-23-37	1	2	3	–	1215A-27-37	1	2	3	–	1215A-33-37	1	2	3	–	1215A-37-37	1	2	3	–

*Three-day shipment for DME #1, #2 and #3 steel types. Four-day shipment for DME #7 stainless steel.

****Key for Ordering B-Series, Retainer Sets and Mold Plates:**

For B-Series Mold Bases: Replace "A" in item number with "B" (minimum "A" plate in "B" series mold base is 1-7/8; minimum "B" plate is 7/8). Example: 88B-23-13

For Cavity Retainer Sets: Delete "A" from item number shown. Example: 88-23-13

For Finish Ground Mold Plates: Delete "A" and indicate plate thickness. Example: 88-23

For Rotary Ground Mold Plates: Delete "A" and indicate plate thickness plus "RGM." Example: 88-23RGM

Plate Thickness Codes: 7 = 7/8, 13 = 1-3/8, 27 = 2-7/8, etc.

Three-Day Shipments

A-Series Mold Bases

(B-Series, Retainer Sets, Mold Plates)**

NOTE: Item numbers printed in blue indicate A-Series Mold Bases available next day in at least one DME steel type shown (see page 26).

11 7/8 x 20"

ITEM NO.	STEEL	ITEM NO.	STEEL	ITEM NO.	STEEL	ITEM NO.	STEEL	ITEM NO.	STEEL	ITEM NO.	STEEL	ITEM NO.	STEEL
1220A-7-7	1 2 3 7	1220A-13-7	1 2 3 7	1220A-17-7	1 2 3 7	1220A-23-7	– 2 3 7	1220A-27-7	– 2 3 7	1220A-33-7	– 2 3 –	1220A-37-7	– 2 3 –
1220A-7-13	1 2 3 7	1220A-13-13	1 2 3 7	1220A-17-13	1 2 3 7	1220A-23-13	– 2 3 7	1220A-27-13	– 2 3 7	1220A-33-13	– 2 3 –	1220A-37-13	– 2 3 –
1220A-7-17	1 2 3 7	1220A-13-17	1 2 3 7	1220A-17-17	1 2 3 7	1220A-23-17	– 2 3 7	1220A-27-17	– 2 3 7	1220A-33-17	– 2 3 –	1220A-37-17	– 2 3 –
1220A-7-23	– 2 3 7	1220A-13-23	– 2 3 7	1220A-17-23	– 2 3 7	1220A-23-23	– 2 3 7	1220A-27-23	– 2 3 7	1220A-33-23	– 2 3 –	1220A-37-23	– 2 3 –
1220A-7-27	– 2 3 7	1220A-13-27	– 2 3 7	1220A-17-27	– 2 3 7	1220A-23-27	– 2 3 7	1220A-27-27	– 2 3 7	1220A-33-27	– 2 3 –	1220A-37-27	– 2 3 –
1220A-7-33	– 2 3 –	1220A-13-33	– 2 3 –	1220A-17-33	– 2 3 –	1220A-23-33	– 2 3 –	1220A-27-33	– 2 3 –	1220A-33-33	– 2 3 –	1220A-37-33	– 2 3 –
1220A-7-37	– 2 3 –	1220A-13-37	– 2 3 –	1220A-17-37	– 2 3 –	1220A-23-37	– 2 3 –	1220A-27-37	– 2 3 –	1220A-33-37	– 2 3 –	1220A-37-37	– 2 3 –

11 7/8 x 23 1/2

ITEM NO.	STEEL	ITEM NO.	STEEL	ITEM NO.	STEEL	ITEM NO.	STEEL	ITEM NO.	STEEL
1223A-13-13	2 7	1223A-17-13	2 7	1223A-23-13	2 7	1223A-27-13	2 7	1223A-33-13	2 –
1223A-13-17	2 7	1223A-17-17	2 7	1223A-23-17	2 7	1223A-27-17	2 7	1223A-33-17	2 –
1223A-13-23	2 7	1223A-17-23	2 7	1223A-23-23	2 7	1223A-27-23	2 7	1223A-33-23	2 –
1223A-13-27	2 7	1223A-17-27	2 7	1223A-23-27	2 7	1223A-27-27	2 7	1223A-33-27	2 –
1223A-13-33	2 –	1223A-17-33	2 –	1223A-23-33	2 –	1223A-27-33	2 –	1223A-33-33	2 –

13 3/8 x 15"

ITEM NO.	STEEL	ITEM NO.	STEEL	ITEM NO.	STEEL	ITEM NO.	STEEL	ITEM NO.	STEEL	ITEM NO.	STEEL	ITEM NO.	STEEL
										1315A-33-7	1 2 3 –	1315A-37-7	1 2 3 –
		1315A-13-13	1 2 3 7	1315A-17-13	1 2 3 7	1315A-23-13	1 2 3 7	1315A-27-13	1 2 3 7	1315A-33-13	1 2 3 –	1315A-37-13	1 2 3 –
		1315A-13-17	1 2 3 7	1315A-17-17	1 2 3 7	1315A-23-17	1 2 3 7	1315A-27-17	1 2 3 7	1315A-33-17	1 2 3 –	1315A-37-17	1 2 3 –
		1315A-13-23	1 2 3 7	1315A-17-23	1 2 3 7	1315A-23-23	1 2 3 7	1315A-27-23	1 2 3 7	1315A-33-23	1 2 3 –	1315A-37-23	1 2 3 –
		1315A-13-27	1 2 3 7	1315A-17-27	1 2 3 7	1315A-23-27	1 2 3 7	1315A-27-27	1 2 3 7	1315A-33-27	1 2 3 –	1315A-37-27	1 2 3 –
1315A-7-33	1 2 3 –	1315A-13-33	1 2 3 –	1315A-17-33	1 2 3 –	1315A-23-33	1 2 3 –	1315A-27-33	1 2 3 –	1315A-33-33	1 2 3 –	1315A-37-33	1 2 3 –
1315A-7-37	1 2 3 –	1315A-13-37	1 2 3 –	1315A-17-37	1 2 3 –	1315A-23-37	1 2 3 –	1315A-27-37	1 2 3 –	1315A-33-37	– 2 3 –	1315A-37-37	1 2 3 –

13 3/8 x 18"

ITEM NO.	STEEL	ITEM NO.	STEEL	ITEM NO.	STEEL	ITEM NO.	STEEL	ITEM NO.	STEEL	ITEM NO.	STEEL	ITEM NO.	STEEL
								1318A-27-7	1 2 3 7	1318A-33-7	– 2 – –	1318A-37-7	– 2 – –
		1318A-13-13	1 2 3 7	1318A-17-13	1 2 3 7	1318A-23-13	1 2 3 7	1318A-27-13	1 2 3 7	1318A-33-13	– 2 – –	1318A-37-13	– 2 – –
		1318A-13-17	1 2 3 7	1318A-17-17	1 2 3 7	1318A-23-17	1 2 3 7	1318A-27-17	1 2 3 7	1318A-33-17	– 2 – –	1318A-37-17	– 2 – –
		1318A-13-23	1 2 3 7	1318A-17-23	1 2 3 7	1318A-23-23	1 2 3 7	1318A-27-23	1 2 3 7	1318A-33-23	– 2 – –	1318A-37-23	– 2 – –
		1318A-13-27	1 2 3 7	1318A-17-27	1 2 3 7	1318A-23-27	1 2 3 7	1318A-27-27	1 2 3 7	1318A-33-27	– 2 – –	1318A-37-27	– 2 – –
1318A-7-33	– 2 – –	1318A-13-33	– 2 – –	1318A-17-33	– 2 – –	1318A-23-33	– 2 – –	1318A-27-33	– 2 – –	1318A-33-33	– 2 – –	1318A-37-33	– 2 – –
1318A-7-37	– 2 – –	1318A-13-37	– 2 – –	1318A-17-37	– 2 – –	1318A-23-37	– 2 – –	1318A-27-37	– 2 – –	1318A-33-37	– 2 – –	1318A-37-37	– 2 – –

13 3/8 x 20 3/4

ITEM NO.	STEEL	ITEM NO.	STEEL	ITEM NO.	STEEL	ITEM NO.	STEEL	ITEM NO.	STEEL	ITEM NO.	STEEL	ITEM NO.	STEEL
1321A-7-7	1 2 3 7	1321A-13-7	1 2 3 7	1321A-17-7	1 2 3 7	1321A-23-7	– 2 – 7	1321A-27-7	– 2 – 7	1321A-33-7	– 2 – –	1321A-37-7	– 2 – –
1321A-7-13	1 2 3 7	1321A-13-13	1 2 3 7	1321A-17-13	1 2 3 7	1321A-23-13	– 2 – 7	1321A-27-13	– 2 – 7	1321A-33-13	– 2 – –	1321A-37-13	– 2 – –
1321A-7-17	1 2 3 7	1321A-13-17	1 2 3 7	1321A-17-17	1 2 3 7	1321A-23-17	– 2 – 7	1321A-27-17	– 2 – 7	1321A-33-17	– 2 – –	1321A-37-17	– 2 – –
						1321A-23-23	– 2 – 7	1321A-27-23	– 2 – 7	1321A-33-23	– 2 – –	1321A-37-23	– 2 – –
1321A-7-27	– 2 – 7	1321A-13-27	– 2 – 7	1321A-17-27	– 2 – 7	1321A-23-27	– 2 – 7	1321A-27-27	– 2 – 7	1321A-33-27	– 2 – –	1321A-37-27	– 2 – –
1321A-7-33	– 2 – –	1321A-13-33	– 2 – –	1321A-17-33	– 2 – –	1321A-23-33	– 2 – –	1321A-27-33	– 2 – –	1321A-33-33	– 2 – –	1321A-37-33	– 2 – –
1321A-7-37	– 2 – –	1321A-13-37	– 2 – –	1321A-17-37	– 2 – –	1321A-23-37	– 2 – –	1321A-27-37	– 2 – –	1321A-33-37	– 2 – –	1321A-37-37	– 2 – –

13 3/8 x 23 1/2

ITEM NO.	STEEL	ITEM NO.	STEEL	ITEM NO.	STEEL	ITEM NO.	STEEL	ITEM NO.	STEEL
1323A-13-13	1 2 3 7	1323A-17-13	– 2 – 7	1323A-23-13	– 2 – 7	1323A-27-13	– 2 – 7	1323A-33-13	– 2 – –
1323A-13-17	– 2 – 7	1323A-17-17	– 2 – 7	1323A-23-17	– 2 – 7	1323A-27-17	– 2 – 7	1323A-33-17	– 2 – –
1323A-13-23	– 2 – 7	1323A-17-23	– 2 – 7	1323A-23-23	– 2 – 7	1323A-27-23	– 2 – 7	1323A-33-23	– 2 – –
1323A-13-27	– 2 – 7	1323A-17-27	– 2 – 7	1323A-23-27	– 2 – 7	1323A-27-27	– 2 – 7	1323A-33-27	– 2 – –
1323A-13-33	– 2 – –	1323A-17-33	– 2 – –	1323A-23-33	– 2 – –	1323A-27-33	– 2 – –	1323A-33-33	– 2 – –

*Three-day shipment for DME #1, #2 and #3 steel types. Four-day shipment for DME #7 stainless steel.

Key for Ordering B-Series, Retainer Sets and Mold Plates:

For B-Series Mold Bases: Replace "A" in item number with "B" (minimum "A" plate in "B" series mold base is 1-7/8; minimum "B" plate is 7/8). Example: 88B-23-13

For Cavity Retainer Sets: Delete "A" from item number shown. Example: 88-23-13

For Finish Ground Mold Plates: Delete "A" and indicate plate thickness. Example: 88-23

For Rotary Ground Mold Plates: Delete "A" and indicate plate thickness plus "RGM." Example: 88-23RGM

Plate Thickness Codes: 7 = 7/8, 13 = 1-3/8, 27 = 2-7/8, etc.

Three-Day Shipments

A-Series Mold Bases

(B-Series, Retainer Sets, Mold Plates)**

NOTE: Item numbers printed in blue indicate A-Series Mold Bases available next day in at least one DME steel type shown (see page 26).

13 3/8 x 26"

ITEM NO.	STEEL		ITEM NO.	STEEL		ITEM NO.	STEEL	
1326A-13-13	2	7	1326A-17-13	2	7	1326A-23-13	2	7
1326A-13-17	2	7	1326A-17-17	2	7	1326A-23-17	2	7
1326A-13-23	2	7	1326A-17-23	2	7	1326A-23-23	2	7

14 7/8 x 17 7/8

ITEM NO.	STEEL				ITEM NO.	STEEL				ITEM NO.	STEEL				ITEM NO.	STEEL				ITEM NO.	STEEL				ITEM NO.	STEEL				ITEM NO.	STEEL			
1518A-7-7	1	2	3	7	1518A-13-7	1	2	3	7	1518A-17-7	1	2	3	7	1518A-23-7	1	2	3	7	1518A-27-7	–	2	3	7	1518A-33-7	–	2	3	–	1518A-37-7	–	2	–	–
1518A-7-13	1	2	3	7	1518A-13-13	1	2	3	7	1518A-17-13	1	2	3	7	1518A-23-13	1	2	3	7	1518A-27-13	–	2	3	7	1518A-33-13	–	2	3	–	1518A-37-13	–	2	–	–
1518A-7-17	1	2	3	7	1518A-13-17	1	2	3	7	1518A-17-17	1	2	3	7	1518A-23-17	1	2	3	7	1518A-27-17	–	2	3	7	1518A-33-17	–	2	3	–	1518A-37-17	–	2	–	–
1518A-7-23	1	2	3	7	1518A-13-23	1	2	3	7	1518A-17-23	1	2	3	7	1518A-23-23	1	2	3	7	1518A-27-23	–	2	3	7	1518A-33-23	–	2	3	–	1518A-37-23	–	2	–	–
1518A-7-27	–	2	3	7	1518A-13-27	–	2	3	7	1518A-17-27	–	2	3	7	1518A-23-27	–	2	3	7	1518A-27-27	–	2	3	7	1518A-33-27	–	2	3	–	1518A-37-27	–	2	–	–
1518A-7-33	–	2	3	–	1518A-13-33	–	2	3	–	1518A-17-33	–	2	3	–	1518A-23-33	–	2	3	–	1518A-27-33	–	2	3	–	1518A-33-33	–	2	3	–	1518A-37-33	–	2	–	–
1518A-7-37	–	2	–	–	1518A-13-37	–	2	–	–	1518A-17-37	–	2	–	–	1518A-23-37	–	2	–	–	1518A-27-37	–	2	–	–	1518A-33-37	–	2	–	–	1518A-37-37	–	2	–	–

14 7/8 x 23 3/4

ITEM NO.	STEEL			ITEM NO.	STEEL			ITEM NO.	STEEL			ITEM NO.	STEEL			ITEM NO.	STEEL			ITEM NO.	STEEL		
1524A-13-13	1	2	7	1524A-17-13	1	2	7	1524A-23-13	1	2	7	1524A-27-13	–	2	7	1524A-33-13	–	2	–	1524A-37-13	–	2	–
1524A-13-17	1	2	7	1524A-17-17	1	2	7	1524A-23-17	–	2	7	1524A-27-17	–	2	7	1524A-33-17	–	2	–	1524A-37-17	–	2	–
1524A-13-23	1	2	7	1524A-17-23	1	2	7	1524A-23-23	1	2	7	1524A-27-23	–	2	7	1524A-33-23	–	2	–	1524A-37-23	–	2	–
1524A-13-27	–	2	7	1524A-17-27	–	2	7	1524A-23-27	–	2	7	1524A-27-27	–	2	7	1524A-33-27	–	2	–	1524A-37-27	–	2	–
1524A-13-33	–	2	–	1524A-17-33	–	2	–	1524A-23-33	–	2	–	1524A-27-33	–	2	–	1524A-33-33	–	2	–	1524A-37-33	–	2	–
1524A-13-37	–	2	–	1524A-17-37	–	2	–	1524A-23-37	–	2	–									1524A-37-37	–	2	–

15 7/8 x 16"

ITEM NO.	STEEL			ITEM NO.	STEEL			ITEM NO.	STEEL			ITEM NO.	STEEL			ITEM NO.	STEEL			ITEM NO.	STEEL		
1616A-7-7	1	2	7	1616A-13-7	1	2	7	1616A-17-7	1	2	7	1616A-23-7	1	2	7	1616A-27-7	1	2	7	1616A-33-7	–	2	–
1616A-7-13	1	2	7	1616A-13-13	1	2	7	1616A-17-13	1	2	7	1616A-23-13	1	2	7	1616A-27-13	1	2	7	1616A-33-13	–	2	–
1616A-7-17	1	2	7	1616A-13-17	1	2	7	1616A-17-17	1	2	7	1616A-23-17	1	2	7	1616A-27-17	1	2	7	1616A-33-17	–	2	–
1616A-7-23	1	2	7	1616A-13-23	1	2	7	1616A-17-23	1	2	7	1616A-23-23	1	2	7	1616A-27-23	1	2	7	1616A-33-23	–	2	–
1616A-7-27	1	2	7	1616A-13-27	1	2	7	1616A-17-27	1	2	7	1616A-23-27	1	2	7	1616A-27-27	1	2	7	1616A-33-27	–	2	–
1616A-7-33	–	2	–	1616A-13-33	1	2	–	1616A-17-33	1	2	–	1616A-23-33	1	2	–	1616A-27-33	1	2	–	1616A-33-33	–	2	–

15 7/8 x 20"

ITEM NO.	STEEL			ITEM NO.	STEEL			ITEM NO.	STEEL			ITEM NO.	STEEL			ITEM NO.	STEEL			ITEM NO.	STEEL			ITEM NO.	STEEL		
1620A-7-7	1	2	7	1620A-13-7	1	2	7	1620A-17-7	1	2	7	1620A-23-7	1	2	7	1620A-27-7	1	2	7	1620A-33-7	–	2	–	1620A-37-7	–	2	–
1620A-7-13	1	2	7	1620A-13-13	1	2	7	1620A-17-13	1	2	7	1620A-23-13	1	2	7	1620A-27-13	1	2	7	1620A-33-13	–	2	–	1620A-37-13	–	2	–
1620A-7-17	1	2	7	1620A-13-17	1	2	7	1620A-17-17	1	2	7	1620A-23-17	1	2	7	1620A-27-17	1	2	7	1620A-33-17	–	2	–	1620A-37-17	–	2	–
1620A-7-23	1	2	7	1620A-13-23	1	2	7	1620A-17-23	1	2	7	1620A-23-23	1	2	7	1620A-27-23	1	2	7	1620A-33-23	–	2	–	1620A-37-23	–	2	–
1620A-7-27	1	2	7	1620A-13-27	1	2	7	1620A-17-27	1	2	7	1620A-23-27	1	2	7	1620A-27-27	1	2	7	1620A-33-27	–	2	–				
1620A-7-33	–	2	–	1620A-13-33	–	2	–	1620A-17-33	–	2	–	1620A-23-33	–	2	–	1620A-27-33	–	2	–	1620A-33-33	–	2	–	1620A-37-33	–	2	–
1620A-7-37	–	2	–	1620A-13-37	–	2	–	1620A-17-37	–	2	–	1620A-23-37	–	2	–									1620A-37-37	–	2	–

15 7/8 x 23 1/2

ITEM NO.	STEEL			ITEM NO.	STEEL			ITEM NO.	STEEL			ITEM NO.	STEEL			ITEM NO.	STEEL			ITEM NO.	STEEL		
1623A-13-13	1	2	7	1623A-17-13	1	2	7	1623A-23-13	1	2	7	1623A-27-13	–	2	7	1623A-33-13	–	2	–	1623A-37-13	–	2	–
1623A-13-17	1	2	7	1623A-17-17	1	2	7	1623A-23-17	1	2	7	1623A-27-17	–	2	7	1623A-33-17	–	2	–	1623A-37-17	–	2	–
1623A-13-23	1	2	7	1623A-17-23	1	2	7	1623A-23-23	1	2	7	1623A-27-23	–	2	7	1623A-33-23	–	2	–	1623A-37-23	–	2	–
1623A-13-27	–	2	7	1623A-17-27	–	2	7	1623A-23-27	–	2	7	1623A-27-27	–	2	7	1623A-33-27	–	2	–	1623A-37-33	–	2	–
1623A-13-33	–	2	–	1623A-17-33	–	2	–	1623A-23-33	–	2	–	1623A-27-33	–	2	–	1623A-33-33	–	2	–	1623A-37-37	–	2	–
1623A-13-37	–	2	–	1623A-17-37	1	2	–	1623A-23-37	–	2	–												

*Three-day shipment for DME #1, #2 and #3 steel types. Four-day shipment for DME #7 stainless steel.

****Key for Ordering B-Series, Retainer Sets and Mold Plates:**

For B-Series Mold Bases: Replace "A" in item number with "B" (minimum "A" plate in "B" series mold base is 1-7/8; minimum "B" plate is 7/8). Example: 88B-23-13

For Cavity Retainer Sets: Delete "A" from item number shown. Example: 88-23-13

For Finish Ground Mold Plates: Delete "A" and indicate plate thickness. Example: 88-23

For Rotary Ground Mold Plates: Delete "A" and indicate plate thickness plus "RGM." Example: 88-23RGM

Plate Thickness Codes: 7 = 7/8, 13 = 1-3/8, 27 = 2-7/8, etc.

Three-Day Shipments

A-Series Mold Bases

(B-Series, Retainer Sets, Mold Plates)**

17 7/8 x 18"

ITEM NO.	STEEL			ITEM NO.	STEEL			ITEM NO.	STEEL			ITEM NO.	STEEL			ITEM NO.	STEEL		
1818A-13-13	1	2	7	1818A-17-13	1	2	7	1818A-23-13	1	2	7	1818A-27-13	–	2	7	1818A-33-13	–	2	–
1818A-13-17	1	2	7	1818A-17-17	1	2	7	1818A-23-17	1	2	7	1818A-27-17	–	2	7	1818A-33-17	–	2	–
1818A-13-23	1	2	7	1818A-17-23	1	2	7	1818A-23-23	1	2	7	1818A-27-23	–	2	7	1818A-33-23	–	2	–
1818A-13-27	–	2	7	1818A-17-27	–	2	7	1818A-23-27	–	2	7	1818A-27-27	–	2	7	1818A-33-27	–	2	–
1818A-13-33	–	2	–	1818A-17-33	–	2	–	1818A-23-33	–	2	–	1818A-27-33	–	2	–	1818A-33-33	–	2	–

17 7/8 x 20"

ITEM NO.	STEEL		ITEM NO.	STEEL		ITEM NO.	STEEL		ITEM NO.	STEEL		ITEM NO.	STEEL		ITEM NO.	STEEL	
1820A-13-13	2	7	1820A-17-13	2	7	1820A-23-13	2	7	1820A-27-13	2	7	1820A-33-13	2	–	1820A-37-13	2	–
1820A-13-17	2	7	1820A-17-17	2	7	1820A-23-17	2	7	1820A-27-17	2	7	1820A-33-17	2	–	1820A-37-17	2	–
1820A-13-23	2	7	1820A-17-23	2	7	1820A-23-23	2	7	1820A-27-23	2	7	1820A-33-23	2	–	1820A-37-23	2	–
1820A-13-27	2	7	1820A-17-27	2	7	1820A-23-27	2	7	1820A-27-27	2	7	1820A-33-27	2	–			
1820A-13-33	2	–	1820A-17-33	2	–	1820A-23-33	2	–	1820A-27-33	2	–	1820A-33-33	2	–	1820A-37-33	2	–
1820A-13-37	2	–	1820A-17-37	2	–	1820A-23-37	2	–							1820A-37-37	2	–

17 7/8 x 23 1/2

ITEM NO.	STEEL		ITEM NO.	STEEL		ITEM NO.	STEEL		ITEM NO.	STEEL		ITEM NO.	STEEL	
1823A-13-13	2	7	1823A-17-13	2	7	1823A-23-13	2	7	1823A-27-13	2	7	1823A-33-13	2	–
1823A-13-17	2	7	1823A-17-17	2	7	1823A-23-17	2	7	1823A-27-17	2	7	1823A-33-17	2	–
1823A-13-23	2	7	1823A-17-23	2	7	1823A-23-23	2	7	1823A-27-23	2	7	1823A-33-23	2	–
1823A-13-27	2	7	1823A-17-27	2	7	1823A-23-27	2	7	1823A-27-27	2	7	1823A-33-27	2	–
1823A-13-33	2	–	1823A-17-33	2	–	1823A-23-33	2	–	1823A-27-33	2	–	1823A-33-33	2	–

19 1/2 x 23 3/4

ITEM NO.	STEEL			ITEM NO.	STEEL			ITEM NO.	STEEL			ITEM NO.	STEEL			ITEM NO.	STEEL			ITEM NO.	STEEL		
1924A-13-13	2	3	7	1924A-17-13	2	3	7	1924A-23-13	2	3	7	1924A-27-13	2	3	7	1924A-33-13	2	3	–	1924A-37-13	2	–	–
1924A-13-17	2	3	7	1924A-17-17	2	3	7	1924A-23-17	2	3	7	1924A-27-17	2	3	7	1924A-33-17	2	3	–	1924A-37-17	2	–	–
1924A-13-23	2	3	7	1924A-17-23	2	3	7	1924A-23-23	2	3	7	1924A-27-23	2	3	7	1924A-33-23	2	3	–	1924A-37-23	2	–	–
1924A-13-27	2	3	7	1924A-17-27	2	3	7	1924A-23-27	2	3	7	1924A-27-27	2	3	7	1924A-33-27	2	3	–				
1924A-13-33	2	3	–	1924A-17-33	2	3	–	1924A-23-33	2	3	–	1924A-27-33	2	3	–	1924A-33-33	2	3	–	1924A-37-33	2	–	–
1924A-13-37	2	–	–	1924A-17-37	2	–	–	1924A-23-37	2	–	–									1924A-37-37	2	–	–

*Three-day shipment for DME #1, #2 and #3 steel types. Four-day shipment for DME #7 stainless steel.

****Key for Ordering B-Series, Retainer Sets and Mold Plates:**

For B-Series Mold Bases: Replace "A" in item number with "B" (minimum "A" plate in "B" series mold base is 1-7/8; minimum "B" plate is 7/8). Example: 88B-23-13

For Cavity Retainer Sets: Delete "A" from item number shown. Example: 88-23-13

For Finish Ground Mold Plates: Delete "A" and indicate plate thickness. Example: 88-23

For Rotary Ground Mold Plates: Delete "A" and indicate plate thickness plus "RGM." Example: 88-23RGM

Plate Thickness Codes: 7 = 7/8, 13 = 1-3/8, 27 = 2-7/8, etc.

DME Special Mold Bases & Plates

DOZENS OF MOLD BASE FEATURES TO CHOOSE FROM IN A PROGRAM THAT DELIVERS WITH SPEED, QUALITY AND AFFORDABILITY

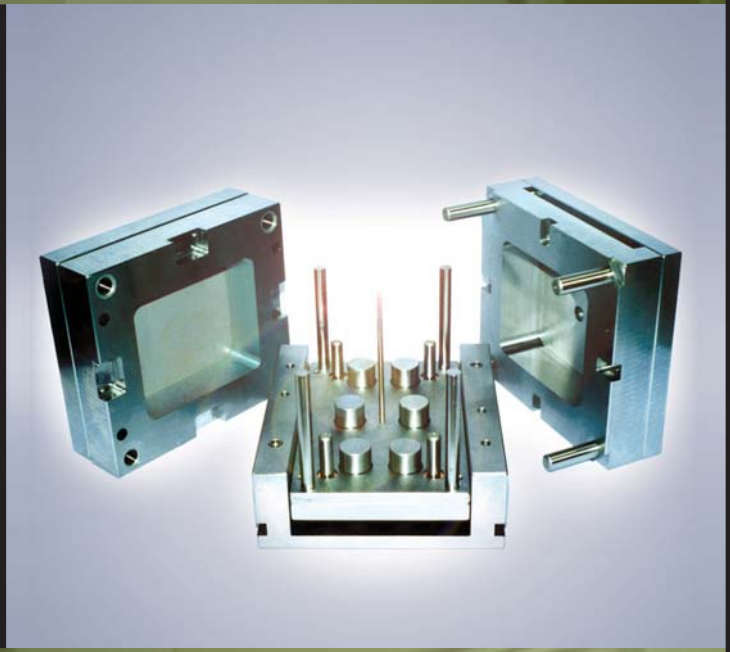

Quick Delivery Special Features

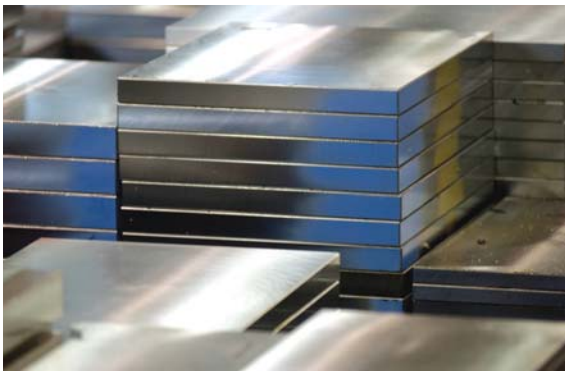

DME Standard Mold Bases Included in the QDS Program

- A-Series Mold Bases
- B-Series Mold Bases
- X-Series Mold Bases
- AX-Series Mold Bases
- T-Series Mold Bases
- Cavity Retainer Sets

Steel Types and Plate Thicknesses Included

- DME #1, #2 and #3 steel from 7/8" thick to 5 7/8" thick
- DME #7 steel from 7/8" thick to 2 7/8" thick

No Charge Features

Available on all DME Mold Bases and Cavity Retainer Sets

- 1-piece or 3-piece housing (standard DME rails)
- Ejector housing covers
- Relocate or omit return pins
- Relocate or omit assembly screws (top and/or bottom)
- Relocate or omit assembly screws in ejector set
- Relocate or omit leader pins and bushings
- Relocate or omit center holes
- Relocate or omit stop pins in ejector bar
- Sprue puller pin of your choice
- Machining for all DME sprue bushings and most clamp slots
- Machining for most locating rings

All ship dates are calculated from receipt of final customer information.

Quick Delivery Special Features

Special Mold Bases Shipping in FIVE Working Days

Includes all DME Standard Mold Bases #1, #2 and #3 steel (7/8" to 5 7/8" thick) and #7 steel (7/8" to 2 7/8" thick); and all "no charge" items, plus:

- Machine for and install guided ejection – 2 or 4 places
- Machine for and install support pillars
- Machine for and install additional stop pins
- Machine press knock-out in bottom clamp plate (tap in ejector bar, if required)
- Machine pry bar slots
- Machine leader pin vent slots in rails
- Machine for spring holes
- Drill and tap lifting holes
- Drill and tap safety strap holes (location ±1/32")
- Machine for and install extra assembly screws in top and/or bottom
- Machine for and install extra assembly screws in ejector assembly
- Machine for and install added return pins
- Rough mill/bore cavity and core pocket; blind or through (NOTE: 1/2" minimum radius required)

Special Mold Bases Shipping in SEVEN Working Days

Includes all features specified above in five working days, plus:

- Machine for DME three-piece extension bushings
- Drill and tap horizontal water lines
- Drill water pipe clearance holes
- Drill vertical water lines (excluding o-ring machining)
- Machine for DME angle pin inserts
- Finish mill/bore cavity and core pocket; blind or through (NOTE: 1/2" minimum radius required)

Special Mold Bases Shipping in ELEVEN Working Days

Includes all features specified above in seven working days, plus:

- Machine for DME parting line interlocks
- Provide special thickness plates (maximum plate thickness of 5 7/8" in DME #1, #2 and #3 steels, and 2 7/8" in DME #7 steel)
- Provide special plate lengths and widths within DME standard size offerings
- Angle pin machining and clearance (maximum 4)
- Ejector pin machining – maximum of 25 pins (3/16" minimum diameter ejector pin; 2 7/8" maximum plate thickness)
- Side interlock machining

Large Custom Mold Bases and Plates / Contour Roughing Services

Large Custom Mold Bases and Plates

Precision Machined Mold Bases and Plates with Lengths to 90"

- Plate lengths up to 90" (2300mm)
- Plate widths up to 60" (1500mm)
- Plate thicknesses up to 39" (1000mm)
- Plate weights up to 6,600 pounds (3000kg) after machining – 8600 lbs. (3900kg) before machining
- Proven medical/packaging market specialization; also specialize in automotive, caps & closures, housewares and PET preform applications

Key Advantages of Contour Roughing

- Moldmakers can use this service to extend their in-house capacity, reduce lead time and focus on other high-value machining
- Consistent machining allowance throughout the surface of the cavity block provides even finishing without areas of heavy stock
- DME Contour Roughing Services from Milacron can provide customers with the CAM program to continue the work where we left off, saving time and programming expense
- Contour roughing can be bundled with the option to stress-relieve cavity blocks and a custom mold base

Contour Roughing Services - At Your Request

At the request of moldmakers, DME contour roughing services are available to rough mill complex part shapes into mold plates, even for milling that requires large and deep cavities.

- The Contour Roughing Service begins with complex core and cavity CAD files from customers
- Industry-leading CAM software enables the programming of contour roughing tool paths, leaving consistent machining allowance throughout the surface of the cavity block
- 3D cavity roughing tool paths to generate a rough milled surface, allowing machining stock for finishing by the customer

For more details on the Contour Roughing Service, contact your DME representative today.

DME American Standard Mold Bases

Mold Bases with optional feature-based selections and rapid delivery

DME A-Series Mold Bases

OVER 75 TRILLION POSSIBLE MOLD BASE CONFIGURATIONS

A-Series Mold Bases

Table of Contents

88A....52-53
812A....54-55
108A....56-57
1012A....58-59
1016A....60-61
1020A....62-63
1112A....64-65
1114A....66-67
1118A....68-69
1123A....70-71
1212A....72-73
1215A....74-75
1220A....76-77
1223A....78-79
1315A....80-81
1318A....82-83
1321A....84-85
1323A....86-87
1326A....88-89
1329A....90-91
1518A....92-93
1524A....94-95
1529A....96-97
1616A....98-99
1620A....100-101
1623A....102-103
1626A....104-105
1629A....106-107
1635A....108-109
1724A....110-111
1729A....112-113
1818A....114-115
1820A....116-117
1823A....118-119
1826A....120-121
1829A....122-123
1835A....124-125
1924A....126-127
1929A....128-129
1935A....130-131
2424A....132-133
2429A....134-135
2435A....136-137
B-Series Mold Bases....138

Mold Base Key Features

Nobody delivers like the DME American Standard Mold Base. With an infinite number of possible configurations. Some key features and options include:

How to use this catalog

The following pages detail the choices available. If you have questions contact us and one of our knowledgeable representatives will assist you.

Key

Features supplied as standard unless otherwise specified

Delivery

Features available in 5 working days

Features available in 7 working days

Features available in 11 working days

- 43 Nominal Sizes
- 9 Plate Thicknesses
- 4 Steel Types
- Guided Ejection
- Pry Slots
- Lifting Holes
- Leader Pin Vents
- Ejector Housing Cover
- Feature Positions
- Feature Omissions
- 3-Piece or Welded Housing Type
- Clamp Slot Type
- Mixed Steel
- Sprue Puller Pin Diameter
- Stop Pin Location

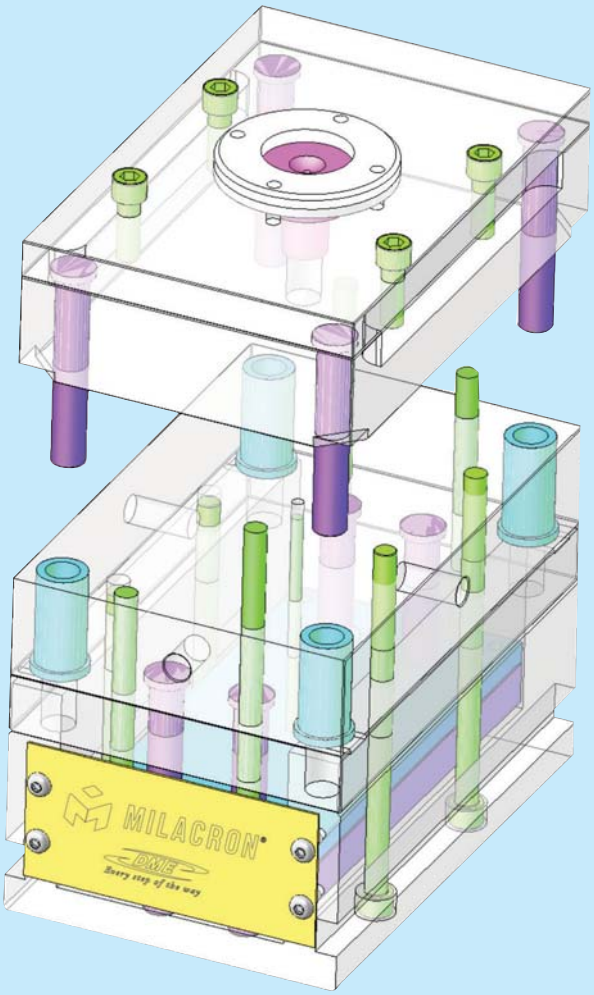

American Mold Base Standard Series Selections

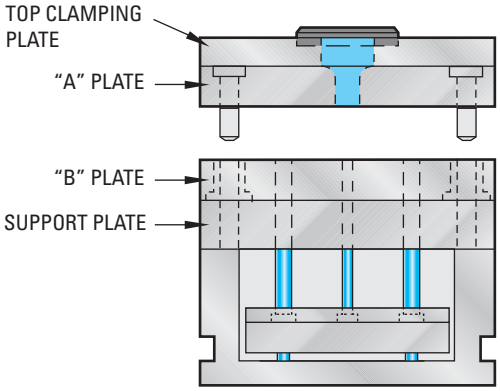

A-Series

The most frequently used Standard Assembly, the "A" Series Mold Base is available in 43 sizes from 7.875 x 7.875 to 23.75 x 35.5.

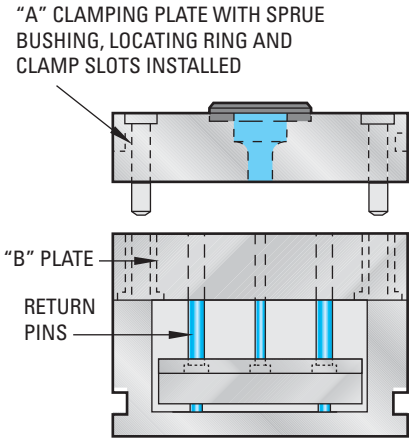

B-Series

When cavities and cores are to be inserted into blind pockets, or machined directly into the "A" and "B" plates, the "B" Series Assembly is used. The Top Clamping Plate and Support Plate are omitted from the assembly.

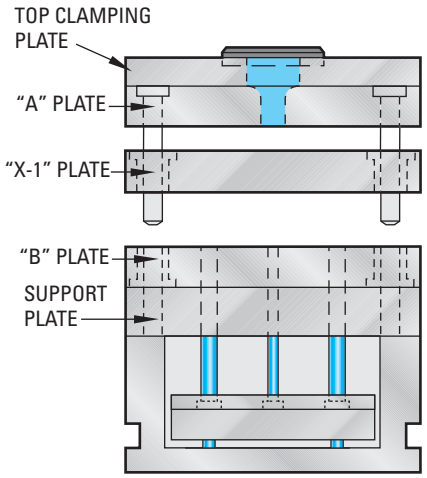

AX-Series

The "AX" Series Assembly is used when the mold requires a floating plate to remain with the upper or stationary half of the assembly. It is basically an "A" Series Assembly with a floating plate ("X-1") added.

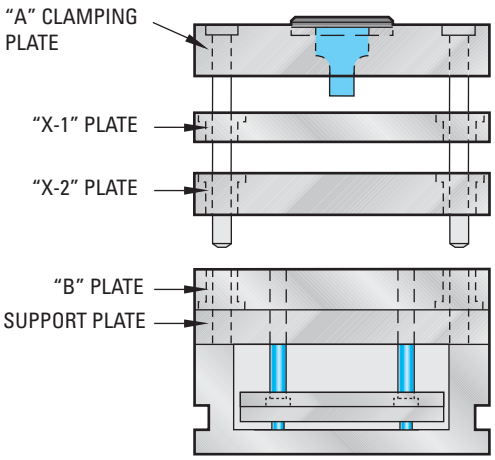

T-Series

The "T" Series Assembly is used for top runner molds that require two floating plates ("X-1" – runner stripper plate, "X-2" – cavity plate) to remain with the upper or stationary half of the assembly.

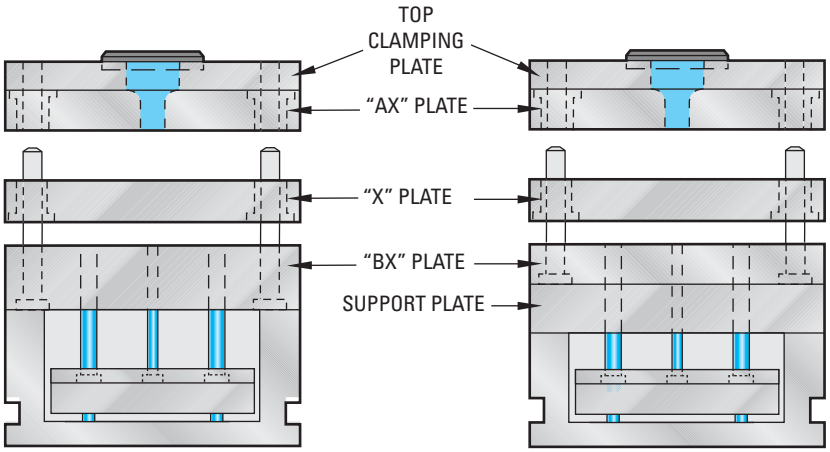

X-Series (5 Plate)

X-Series (6 Plate)

Most frequently used for molds requiring stripper plate ejection, the "X" Series Assembly is available with a Support Plate (6-plate series) or without a Support Plate (5-plate series).

NOTE: Location and diameter of standard components are identical for all mold base series.

DME American Standard Steel Types

Synonymous with mold making are the DME American Standard Steel Types. Our experience in selecting mold steel ensures the cleanliness, durability and machinability appropriate to your application.

Steels for Structural and Holder Block Applications

DME #1 Steel is a medium carbon quality steel with greater tensile strength than typical plain carbon warehouse steels. It machines easily, but is not "sticky", permitting a faster and smoother cut. International comparisons: DIN 1.1178 (CK 30) and 1.1730 (C 45 W); JIS S 30 CM, S50C, S55C; ISO 683-1 C30E4.

DME #2 Steel is a medium alloy steel specified for durability in structural applications. It is supplied pre-heat treated to 28-34 HRC (271-321 Bhn). A high strength steel, it is ideal for cavity and core retainer plates, clamping plates and support plates in molds. International comparisons: DIN 1.2312 (40CrMnMoS 8 6), 1.7218 (25CrMo4) and 1.2331 (41CrMoS4); JIS SCM 430; ISO 683-2 Type 1.

DME #7 Steel is a modified AISI 400 series stainless steel for holder block applications. It is supplied pre-heat treated to 32-36 HRC (302-340 Bhn). This stainless steel offers corrosion-resistance and exceptional machinability but cannot be further hardened (see DME #6). For humid environments, corrosive plastics, "clean room" or "100% stainless" applications, it is an ideal choice for all structural mold plates. International comparisons: none.

Steels for Cavity & Core Applications

DME #3 Steel is a P-20 AISI 4130 type cavity steel. Exceptionally clean, it is pre-heat treated to 28-34 HRC (271-321 Bhn). It provides good machinability, the ability to heat treat to higher hardness, and exceptional polishability. International comparisons: DIN 1.2311 G40CrMnMo7; JIS none; ISO none.

DME #5 Steel is an AISI/SAE H-13 type thermal shock resistant, hotwork die steel. Supplied fully annealed (approximately 200 Bhn; 13-20 HRC) for easy machinability, it can be subsequently heat treated to the desired hardness with a minimum of deformation. Mainly used for die cast dies, it is also suitable for plastic molds with exceptional hardness or polishability requirements. DME #5 Steel meets or exceeds the acceptance criteria established by the NADCA as detailed in Technical Digest Number 01-80-01D. International comparisons: DIN 1.2344 (X40CrMoV5-1); JIS SKD 61; ISO 4955 H13.

DME #6 Steel is a modified AISI 420 type stainless steel. It is supplied fully annealed to 179-241 Bhn (8-23 HRC), making it readily machinable. Unlike DME #7 steel, DME #6 steel is a cavity-grade material that can be subsequently heat treated to the desired hardness and has excellent polishability. International comparisons: DIN 1.4028 (X30Cr13); JIS SUS 420 J 2; ISO none.

Typical Steel Types Configurations

"A" Series Mold Bases are available in over 40 standard sizes, 7-7/8 x 7-7/8 to 23-3/4 x 35-1/2. Each size offers a wide variety of standard cavity plate thickness combinations, plus your choice of DME No. 1, No. 2, No. 3 or No. 7 steel.

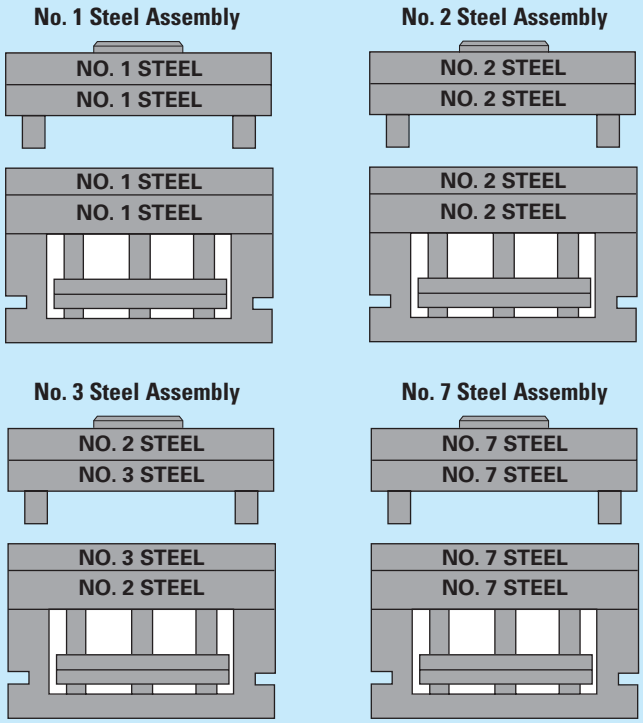

Steel Selections: Available in 43 Nominal Sizes

MOLD PLATE		STEEL TYPES					
		#1	#2	#3	#7	#5	#6
TOP CLAMP PLATE		⚡	⚡	⚡	⚡		
AC PLATE		⚡	⚡	⚡	⚡		
A PLATE		⚡	⚡	⚡	⚡*		
B PLATE		⚡	⚡	⚡	⚡*		
AX, BX PLATES		⚡	⚡	⚡	⚡		
XP, X-1 AND X-2 PLATES		⚡	⚡	⚡	⚡		
SUPPORT PLATE		⚡	⚡	⚡	⚡		
EJECTOR RETAINER PLATE		⚡			⚡		
EJECTOR BAR PLATE		⚡			⚡		
EJECTOR HOUSING ASSEMBLY	WELDED	⚡					
	THREE PIECE	⚡			⚡		

DME mold base assemblies are regularly comprised of mixed steel types to deliver plates configured to your application requirements. You can select steel types for each plate, as available from the table at left, in any combination for your mold base.

⚡ = Ships in 5 days or less

= Contact DME for quote. DME Customer Service can quote up to 5.875 thickness plates on all plates.

= Not available

*Up to 2.375 thickness

NOTE: AC plates are not recommended.

The American Standard Mold Base is available in 43 nominal sizes to match the mold space requirements for your application.

As the creator of the American mold base standard, we have the largest selection of mold base sizes and most are available in less than five business days.

NOTE: Drilled complete replacement plates available with quick delivery.

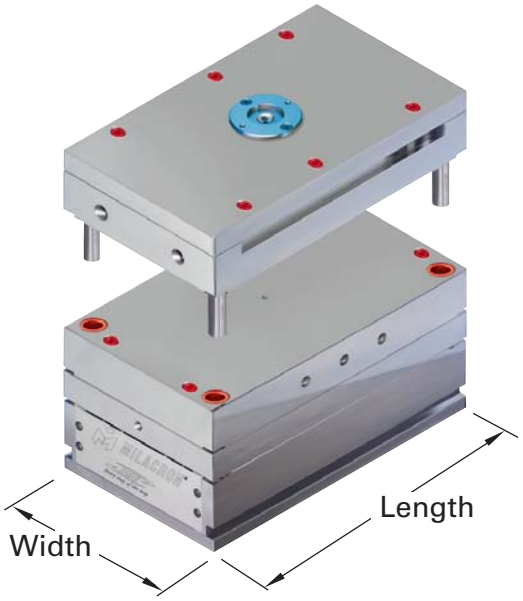

NOTE: Approximate mold base weight can be estimated with the following formula:
WEIGHT = WIDTH x LENGTH x HEIGHT x .283 x 90%

NOMINAL SIZE	WIDTH (IN)	LENGTH (IN)	WEIGHT RANGE (LBS)	
			MIN	MAX
88	7.875	7.875	116	305
812	7.875	11.875	175	460
108	9.875	8.000	156	393
1012	9.875	11.875	235	592
1016	9.875	16.000	316	798
1020	9.875	20.000	395	997
1112	10.875	12.000	261	659
1114	10.875	14.000	305	769
1118	10.875	18.000	392	988
1123	10.875	23.500	511	1290
1212	11.875	12.000	285	719
1215	11.875	15.000	379	899
1220	11.875	20.000	505	1199
1223	11.875	23.500	594	1409
1315	13.375	15.000	427	1038
1318	13.375	18.000	512	1246
1321	13.375	20.750	590	1436
1323	13.375	23.500	669	1627
1326	13.375	26.000	740	1800
1329	13.375	29.500	839	2042
1518	14.875	17.875	599	1410
1524	14.875	23.750	796	1873
1529	14.875	29.500	989	2327
1616	15.875	16.000	573	1347
1620	15.875	20.000	716	1683
1623	15.875	23.500	841	1978
1626	15.875	26.000	930	2189
1629	15.875	29.500	1056	2483
1635	15.875	35.500	1270	2988
1724	16.500	23.750	883	2078
1729	16.500	29.500	1097	2581
1818	17.875	18.000	725	1706
1820	17.875	20.000	806	1896
1823	17.875	23.500	947	2227
1826	17.875	26.000	1048	2464
1829	17.875	29.500	1189	2796
1835	17.875	35.500	1430	3365
1924	19.500	23.750	1044	2456
1929	19.500	29.500	1297	3050
1935	19.500	35.500	1648	3758
2424	23.750	23.750	1343	3062
2429	23.750	29.500	1668	3804
2435	23.750	35.500	2008	4578

American Mold Base Standard Features

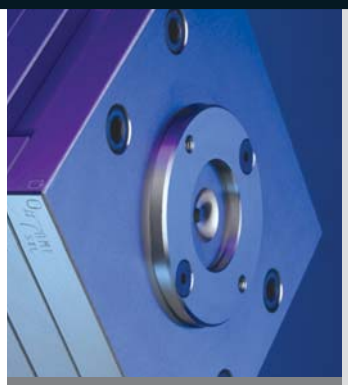

Locating Rings

The Locating Ring aligns the mold base to the stationary platen side of the press and positions the sprue bushing correctly.

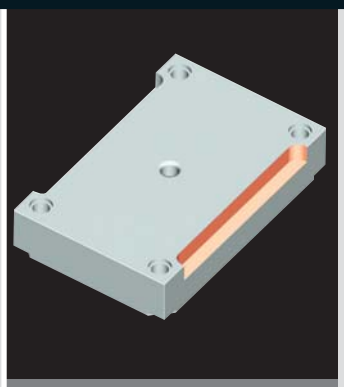

Clamp Slots

Clamp Slots facilitate clamping the mold to the platen of the press. DME mold bases offer four slot types to ensure the best fit for the requirements of your application.

Sprue Bushings

The Sprue Bushing provides a seat at the spherical radius for the nozzle of the press. This provides a path for the material from the nozzle to the runner system.

Leader Pins, Vents and Bushings

Leader Pins and Bushings align both halves of the mold at the parting line. Leader Pin Vents, which allow trapped air to escape from the mold, are designed into all 15-inch-and-wider series molds. When desired, they can be specified on smaller molds.

Upper and Lower Assembly Screws

Assembly screws are used to hold the plates of the upper and lower halves of the mold together. For simplicity, the upper and lower assembly screws are generally placed in similar positions.

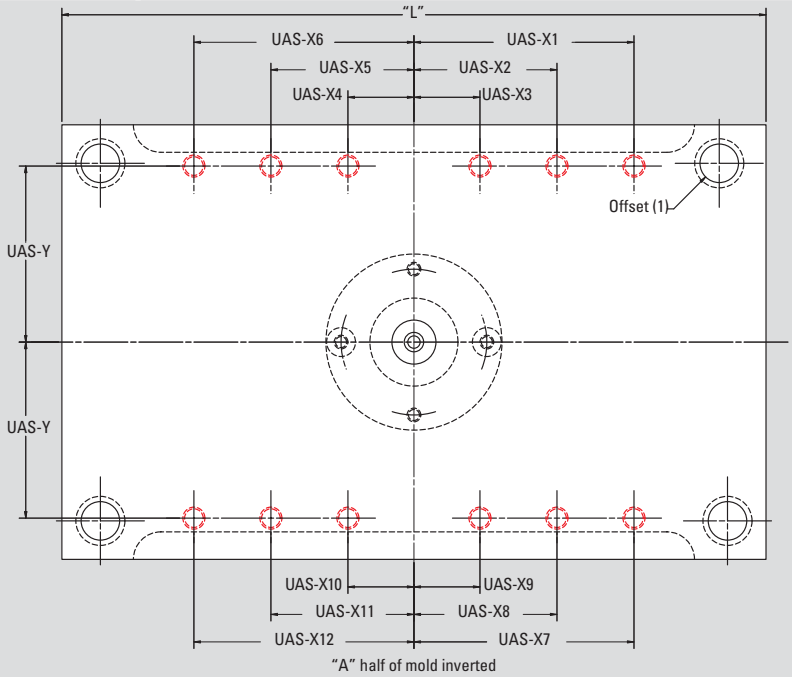

American Mold Base Standard Features

Ejector Housing and Cover

A diverse selection of housing types fit all application demands. A one-piece welded housing is available for customers requiring maximum rigidity and robust durability. For maximum flexibility of configuration options, a three-piece housing is also available.

For additional operator safety, DME mold bases include an ejector housing cover, except when a longer length ejector bar is selected. The housing cover is fastened on both sides with 5/16-18 button-head cap screws.

Ejector Assembly Screws

Ejector assembly screws are used to hold the plate of the ejector assembly together. Recommended position will be provided but you can specify any different position.

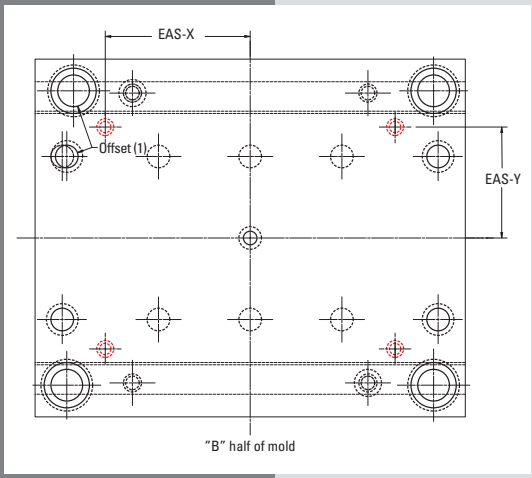

Return Pins, Stop Pins and Sprue Puller Pins

Return Pins are used to ensure correct return of the ejector assembly to the home position. DME return pins are precision-ground from superior quality hotwork die steel. Stop Pins arrest travel – preventing excessive wear and possible housing damage. The Sprue Puller Pin removes material from the Sprue Bushing at the end of the molding cycle.

Self-Lubricating Bushings

Saves design and moldmaking costs for lubrication and fittings. Reduces wear and galling. Lowers maintenance and repair costs. Eliminates contamination... ideal for "clean room" environments.

American Mold Base Optional Features

Guided Ejection Systems

5 5-DAY SHIPPING

Guided Ejection Systems hold the ejector assembly in alignment and support the weight of the ejector assembly throughout the molding cycle – greatly reducing wear on ejection components and preventing cocking of the ejector assembly.

Pry Slots

5 5-DAY SHIPPING

DME mold bases feature Pry Slots, installed in any plate specified, on the parting and/or non-parting line side. This provides handling ease when opening and/or disassembling a mold.

Pockets and Spring Pockets

5 5-DAY SHIPPING

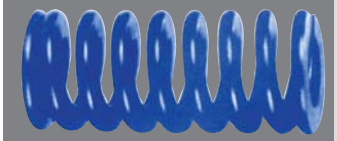

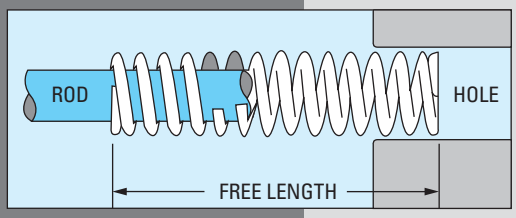

Per customer specifications, DME finishes any type of cavity and core pockets. See the DME Mold Components catalog for spring free lengths and hole dimensions.

Lifting Holes

5 5-DAY SHIPPING

Lifting Holes can be used to install hoist rings for ease of handling. DME mold bases can be configured only with Lifting Holes which are appropriate for the specific mold base size. Refer to DME Mold Components catalog for a comprehensive selection of Hoist Rings.

Mold Strap Holes

5 5-DAY SHIPPING

Machined holes will be for mounting mold straps. Please provide desired positions and quantity (minimum 2).

American Mold Base Optional Features

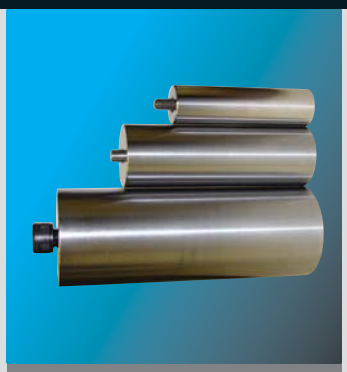

Support Pillars

5 5-DAY SHIPPING

Support Pillars should be used liberally since they greatly increase the capacity of the mold to support the projected area of the cavities, runner and sprue. By providing additional support, they prevent deflection of the mold.

Waterlines

7 7-DAY SHIPPING

Waterlines and plugs are provided per customer specifications for optimal cooling efficiency.

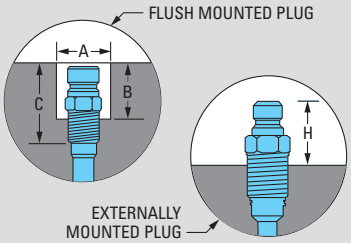

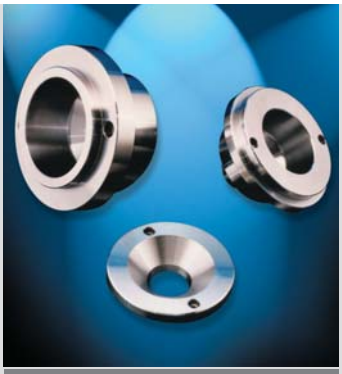

3-Plate Extension Bushings

7 7-DAY SHIPPING

These 3-plate extension bushings can save material, reduce cycle time and help prevent runner hang-ups in 3-plate molds.

Interlocks

11 11-DAY SHIPPING

Provides positive alignment between adjacent plates when mold has one or multiple parting line openings. This provides close alignment for interlock cavities and cores in stripper plate type molds.

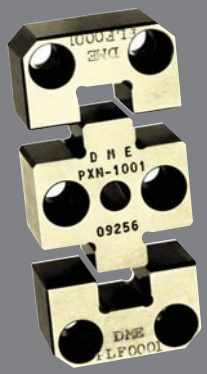

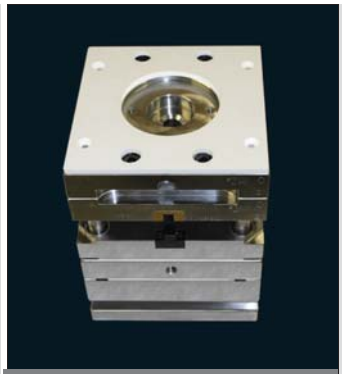

Insulator Sheets

These sheets have excellent non-deformation characteristics and a compressive strength which is higher than asbestos and mica materials. Compression molded for high impact strength, they are supplied micro-finished top and bottom, parallel within ±.002.

DME American Standard Mold Base Quote Request Form

29111 Stephenson Highway
Madison Heights, MI 48071-2383

USA: Tel: 800-626-6653
Fax: 888-808-4363

Canada: Tel: 800-387-6600
Fax: 800-461-9965

dme_cad@dme.net

NOMINAL SIZE		
88	7.875	7.875
812	7.875	11.875
108	9.875	8.000
1012	9.875	11.875
1016	9.875	16.000
1020	9.875	20.000
1112	10.875	12.000
1114	10.875	14.000
1118	10.875	18.000
1123	10.875	23.500
1212	11.875	12.000
1215	11.875	15.000
1220	11.875	20.000
1223	11.875	23.500
1315	13.375	15.000
1318	13.375	18.000
1321	13.375	20.750
1323	13.375	23.500
1326	13.375	26.000
1329	13.375	29.500
1518	14.875	17.875
1524	14.875	23.750
1529	14.875	29.500
1616	15.875	16.000
1620	15.875	20.000
1623	15.875	23.500
1626	15.875	26.000
1629	15.875	29.500
1635	15.875	35.500
1724	16.500	23.750
1729	16.500	29.500
1818	17.875	18.000
1820	17.875	20.000
1823	17.875	23.500
1826	17.875	26.000
1829	17.875	29.500
1835	17.875	35.500
1924	19.500	23.750
1929	19.500	29.500
1935	19.500	35.500
2424	23.750	23.750
2429	23.750	29.500
2435	23.750	35.500

Company Name: _____

Address: _____

City: _____ State: _____ Zip: _____

Email: _____

Account No.: _____ Date: _____

Contact: _____

Telephone: _____ Fax: _____

Cust. Proj. No.: _____ P.O. No.: _____

☐ Order ☐ Quote Only

NOTE: For feature selections left blank, the DME Standard recommendation will be provided.

☐ _____ **Series (A, AX, B, X or T)**

Mold Base Item No.: _____

☐ **Retainer Set** Item No.: _____

Type of Steel: DME No. _____

Top Clamp Plate: ☐ 7/8 ☐ 1-3/8 _____

"C" Riser Height: ☐ Standard _____

☐ Welded/Standard
☐ 3-Piece "BCP" Thickness _____

"E" Ejector Bar Length: ☐ Standard _____

Locating Ring: Item No.: _____

Sprue Bushing: ☐ Standard _____
"O" Orifice: _____
"R" Radius: _____

Clamp Slot Machining: ☐ Standard _____
☐ Type A ☐ Type B ☐ Type C ☐ Type D
☐ Omit Upper Slot Machining
☐ Machine Entire Length
☐ (4) Sides (Entire Width & Length)
☐ Omit Lower Clamp Slot Machining
NOTE: Three-piece housing supplied.

"L" Leader Pin Length: ☐ Standard _____
☐ Clearance in Housing:
Accommodate Length _____
Thru Housing _____
Ship w/Block of Wood _____

Leader Pin Bushings: ☐ Standard _____
Specify Diameter: _____
☐ Steel (STD) ☐ Self-Lubricating ☐ Bronze

Return Pin: ☐ Standard _____

Sprue Puller Pin: ☐ Standard _____

Omit the Following Holes:
☐ Locating Ring
☐ Sprue Bushing
☐ Sprue Puller Pin
☐ Upper Assembly Screws
☐ Leader Pins
☐ Leader Pin Bushings
☐ Return Pins
☐ Stop Pins
☐ Lower Assembly Screws
☐ Ejector Assembly Screws
☐ **Omit all center holes**

Omit the Following Parts:
☐ Locating Ring
☐ Sprue Bushing
☐ Sprue Puller Pin
☐ Upper Assembly Screws
☐ Leader Pins
☐ Leader Pin Bushings
☐ Return Pins
☐ Stop Pins
☐ Lower Assembly Screws
☐ Ejector Assembly Screws
☐ **Omit all center hole parts**

Relocate the Following Features:
☐ Center Holes
☐ Upper Assembly Screws
Return Pins:
☐ Position (DME Standard)
☐ Position 2 (inboard for spring pockets)
☐ Custom Position

NOTE: Provide sketch or dimensions for custom positions (see p. 48).

☐ Stop Pins
☐ Lower Assembly Screws
☐ Ejector Assembly Screws
☐ Leader Pins and Bushings

Additional Comments/Notes: _____

_____
_____
_____
_____
_____

DME American Standard Mold Base Quote Request Form

Company Name:: _____ Date: _____

Additional Features – Ships in 5 Working Days

Guided Ejection:

Quantity: _____ Pin Dia.: _____ ☐ System 1 ☐ System 2

☐ Recommended Position ☐ Custom Position: GEx _____ GEy _____

☐ Bronze Bushing ☐ Self-Lubricating Bushing _____

Pry Slots: (4 places each plate)

(NOTE: P = Parting Line NP = Non Parting Line)

☐ TCP: P _____ NP _____

☐ A Plate: P _____ NP _____

☐ B Plate: P _____ NP _____

☐ Support Plate: P _____ NP _____

☐ Housing: P _____ NP _____

☐ _____ P _____ NP _____

Lift Holes: (Prints required if not on center)

☐ TCP: Quantity _____ Dia. _____

☐ A Plate: Quantity _____ Dia. _____

☐ B Plate: Quantity _____ Dia. _____

☐ Support Plate: Quantity _____ Dia. _____

☐ Housing:

☐ _____: Quantity _____ Dia. _____

☐ On center _____

☐ **Leader Pin Vents:**

(NOTE: Designed in all 15" and wider mold bases. When desired, can be specified on smaller molds.)

☐ **Rough Rectangular Pockets:** (Prints required) Length _____ Width _____

☐ Through ☐ Blind (specify depth): _____ Corner Radius (.50 min/1.00 max): _____

(NOTE: Rough Pocket tolerance -.062 per side)

☐ **Knock-out Holes:** (Prints required if not on center) Drill Quantity _____ Tap Quantity _____

☐ **Mold Strap Holes:** (Prints required) Quantity _____

☐ **Spring Pockets:** (Prints required) Quantity _____ Number of Plates _____

☐ **Support Pillars:** (Prints required) Quantity _____ Diameter _____ Style _____

Additional Components: (Prints required)

☐ Lower Assembly Screws: Quantity _____

☐ Upper Assembly Screws: Quantity _____

☐ Ejector Assembly Screws: Quantity _____

☐ Return Pins: Quantity _____

☐ Stop Pins: Quantity _____

Comments: _____

Additional Features – Ships in 7 Working Days (includes features listed in 5 working days)

☐ **Extension Bushing (T-Series):**

Extension Bushing Item Number: _____ Stripper Bushing: TEB-0001

☐ **Finished Rectangular Pockets:** (Prints required) Length _____ Width _____

☐ Through ☐ Blind (specify depth): _____ Corner Radius (.50 min/1.00 max): _____

(NOTE: Finished pocket tolerance +/- .001)

☐ **Waterlines:** (Prints required)

Diameter: _____

Number of Plates with Waterlines: _____

Total Length of Waterlines (in inches) in Each Plate: _____

Number of Sides: _____

Comments: _____

Additional Features – Ships in 11 Working Days (includes features listed in 7 working days)

☐ **Special Plate Thickness:**

Plate to be altered: _____ Thickness: _____

☐ **Parting Line Interlocks** (see Mold Components catalog; Print required):

Quantity: _____

Part Numbers: _____

Comments: _____

For additional work, contact Customer Service at 800-626-6653 or email drawing files to dme_cad@dme.net

Special Feature Location Form

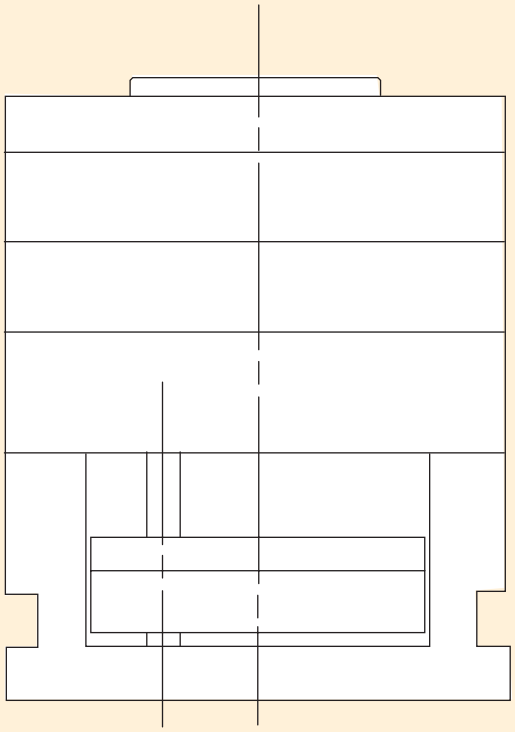

END VIEW

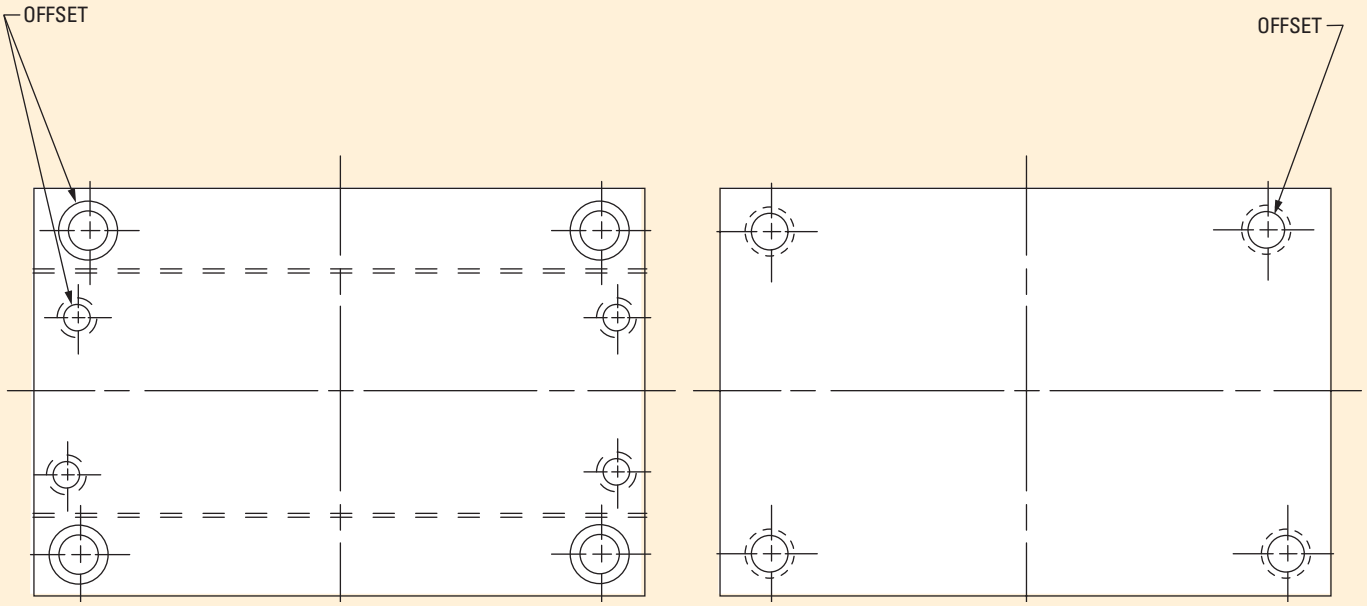

Steel Hardness Chart

CROSS-REFERENCE BETWEEN DIFFERENT HARDNESS MEASUREMENTS					
BRINELL HARDNESS BHN*	VICKERS HARDNESS HV	ROCKWELL HARDNESS HRA	ROCKWELL HARDNESS HRB	ROCKWELL HARDNESS HRC	SHORE HARDNESS HS
10mm BALL, 3000kgf LOAD	136° DIAMOND PYRAMID, 10kgf LOAD	BRALE PENETRATOR, 60kgf LOAD	1/16 INCH BALL, 100kgf LOAD	BRALE PENETRATOR, 150kgf LOAD	
86	90		48		
95	100		56.2		
105	110		62.3		
114	120		66.7		
124	130		71.2		20
133	140		75		21
143	150		78.7		22
152	160		81.7	(0)	24
162	170		85	(3)	25
171	180		87.1	(6)	26
181	190		89.5	(8.5)	28
190	200		91.5	(11)	29
200	210		93.4	(13.4)	30
209	220		95	(15.7)	32
219	230		96.7	(18)	33
228	240	60.7	98.1	20.3	34
238	250	61.6	99.5	22.2	36
247	260	62.4	(101)	24	37
256	270	63.1	(102)	25.6	38
265	280	63.8	(103.5)	27.1	40
275	290	64.5	(104.5)	28.5	41
284	300	65.2	(105.5)	29.8	42
303	320	66.4	(107)	32.2	45
322	340	67.6	(108)	34.4	47
341	360	68.7	(109)	36.6	50
360	380	69.8	(110)	38.8	52
379	400	70.8		40.8	55
397	420	71.8		42.7	57
415	440	72.8		44.5	59
433	460	73.6		46.1	62
452	480	74.5		47.7	64
471	500	75.3		49.1	66
488	520	76.1		50.5	67
507	540	76.7		51.7	69
525	560	77.4		53	71
545	580	78		54.1	72
564	600	78.6		55.2	74
582	620	79.2		56.3	75
601	640	79.8		57.3	77
620	660	80.3		58.3	79
638	680	80.8		59.2	80
656	700	81.3		60.1	81
670	720	81.8		61	83
684	740	82.2		61.8	84
698	760	82.6		62.5	86
710	780	83		63.3	87
722	800	83.4		64	88
745	840	84.1		65.3	91
767	880	84.7		66.4	93

*A 10mm steel ball is used for 450 BHN and below. A 10mm carbide ball is used above 450 BHN.

Also known as Firth Diamond Hardness Number.

Values in parentheses are not contained in the normal definition range for hardness checking, but are often used in comparable measure.

DME A-Series Mold Bases

OVER 75 TRILLION POSSIBLE MOLD BASE CONFIGURATIONS

Table of Contents

88A....52-53
812A....54-55
108A....56-57
1012A....58-59
1016A....60-61
1020A....62-63
1112A....64-65
1114A....66-67
1118A....68-69
1123A....70-71
1212A....72-73
1215A....74-75
1220A....76-77
1223A....78-79
1315A....80-81
1318A....82-83
1321A....84-85
1323A....86-87
1326A....88-89
1329A....90-91
1518A....92-93
1524A....94-95
1529A....96-97
1616A....98-99
1620A....100-101
1623A....102-103
1626A....104-105
1629A....106-107
1635A....108-109
1724A....110-111
1729A....112-113
1818A....114-115
1820A....116-117
1823A....118-119
1826A....120-121
1829A....122-123
1835A....124-125
1924A....126-127
1929A....128-129
1935A....130-131
2424A....132-133
2429A....134-135
2435A....136-137
B-Series Mold Bases....138

7 7/8 x 7 7/8 A-Series Mold Bases

See opposite page for general dimensions, ejector stroke data, locating rings, sprue bushings, ejector bar lengths and other ordering information.

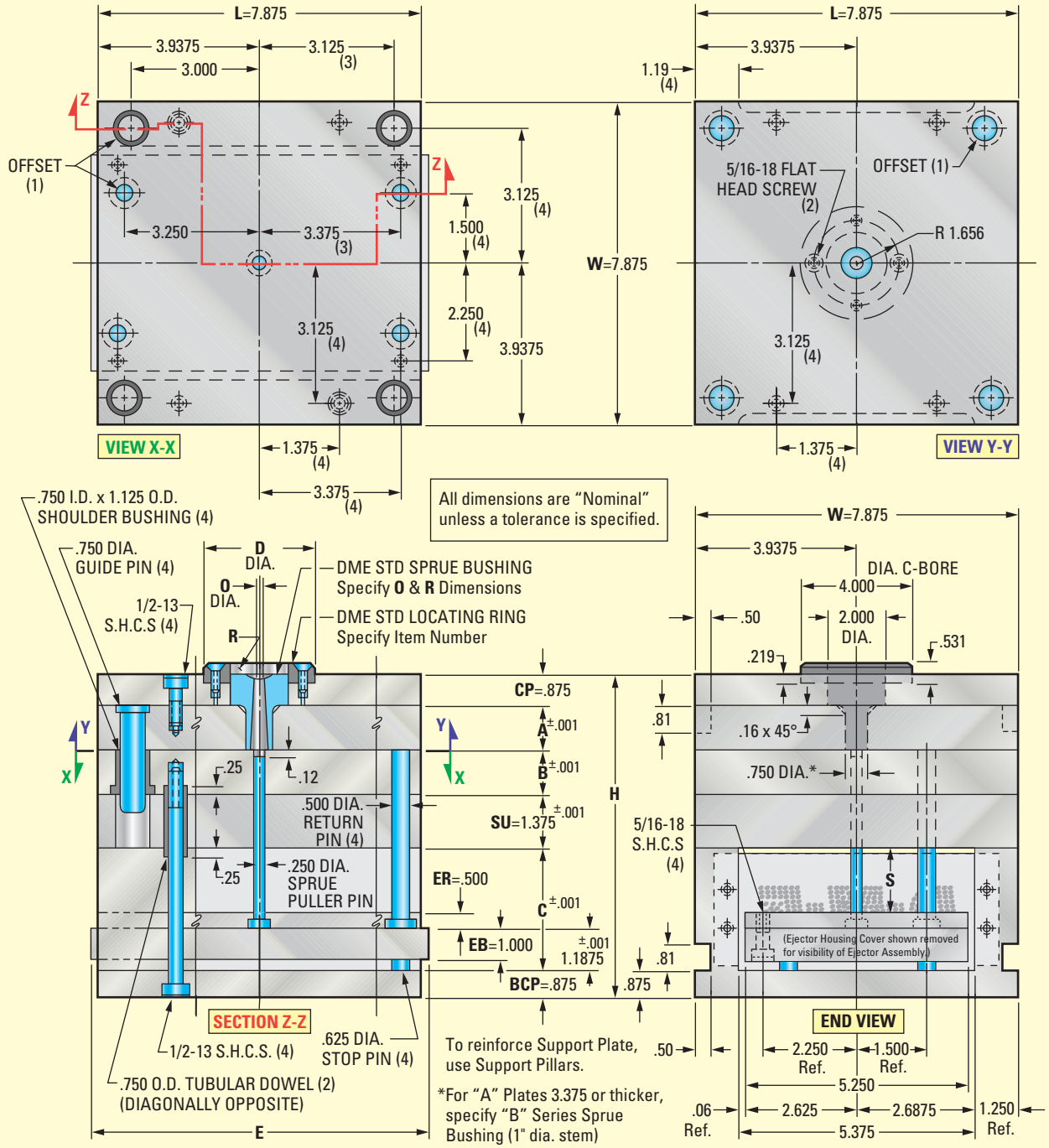

Mold Base Selections

A-Series Assembly

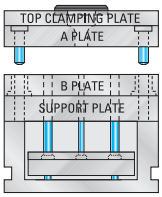

B-Series Assembly

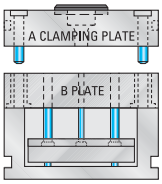

(For X-Series Stripper Plate, AX-Series and T-Series Mold Bases, see pages 173-198.)

Steel Configurations available in:

No. 1 Steel Assembly

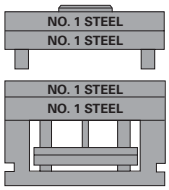

No. 2 Steel Assembly

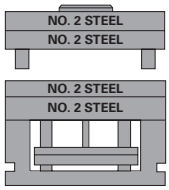

No. 3 Steel Assembly

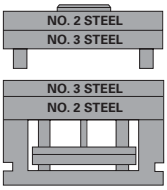

No. 7 Steel Assembly

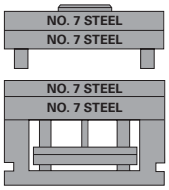

Other steel combinations also available. (Ejector Plates and Housings are No. 1 Steel, unless otherwise specified.) For additional Steel information, see page 42.

7 7/8 x 7 7/8 A-Series Mold Bases

A	B	C	H	ASSEMBLY ITEM NO.	NET WT.
.875 (7/8)	0.875	2.500	7.375	88A-7-7	111
	1.375	2.500	7.875	88A-7-13	120
	1.875	2.500	8.375	88A-7-17	129
	2.375	2.500	8.875	88A-7-23	138
	2.875	3.000	9.875	88A-7-27	149
	3.375	3.500	10.875	88A-7-33	161
	3.875	3.500	11.375	88A-7-37	170
	4.875	4.500	13.375	88A-7-47	193
	5.875	4.500	14.375	88A-7-57	211

A	B	C	H	ASSEMBLY ITEM NO.	NET WT.
2.375 (2-3/8)	0.875	2.500	8.875	88A-23-7	138
	1.375	2.500	9.375	88A-23-13	147
	1.875	2.500	9.875	88A-23-17	155
	2.375	3.000	10.875	88A-23-23	167
	2.875	3.500	11.875	88A-23-27	179
	3.375	4.000	12.875	88A-23-33	190
	3.875	4.000	13.375	88A-23-37	199
	4.875	4.500	14.875	88A-23-47	219
	5.875	4.500	15.875	88A-23-57	237

A	B	C	H	ASSEMBLY ITEM NO.	NET WT.
3.875 (3-7/8)	0.875	3.000	10.875	88A-37-7	167
	1.375	3.500	11.875	88A-37-13	179
	1.875	3.500	12.375	88A-37-17	187
	2.375	4.000	13.375	88A-37-23	199
	2.875	4.000	13.875	88A-37-27	208
	3.375	4.000	14.375	88A-37-33	217
	3.875	4.500	15.375	88A-37-37	228
	4.875	4.500	16.375	88A-37-47	246
	5.875	4.500	17.375	88A-37-57	263

A	B	C	H	ASSEMBLY ITEM NO.	NET WT.
1.375 (1-3/8)	0.875	2.500	7.875	88A-13-7	120
	1.375	2.500	8.375	88A-13-13	129
	1.875	2.500	8.875	88A-13-17	138
	2.375	3.000	9.875	88A-13-23	149
	2.875	3.000	10.375	88A-13-27	158
	3.375	3.500	11.375	88A-13-33	170
	3.875	4.000	12.375	88A-13-37	181
	4.875	4.500	13.875	88A-13-47	202
	5.875	4.500	14.875	88A-13-57	219

A	B	C	H	ASSEMBLY ITEM NO.	NET WT.
2.875 (2-7/8)	0.875	3.000	9.875	88A-27-7	149
	1.375	3.000	10.375	88A-27-13	158
	1.875	3.500	11.375	88A-27-17	170
	2.375	3.500	11.875	88A-27-23	179
	2.875	4.000	12.875	88A-27-27	190
	3.375	4.000	13.375	88A-27-33	199
	3.875	4.000	13.875	88A-27-37	208
	4.875	4.500	15.375	88A-27-47	228
	5.875	4.500	16.375	88A-27-57	246

A	B	C	H	ASSEMBLY ITEM NO.	NET WT.
4.875 (4-7/8)	0.875	3.500	12.375	88A-47-7	187
	1.375	3.500	12.875	88A-47-13	196
	1.875	4.000	13.875	88A-47-17	208
	2.375	4.000	14.375	88A-47-23	217
	2.875	4.000	14.875	88A-47-27	225
	3.375	4.500	15.875	88A-47-33	237
	3.875	4.500	16.375	88A-47-37	246
	4.875	4.500	17.375	88A-47-47	263
	5.875	4.500	18.375	88A-47-57	281

A	B	C	H	ASSEMBLY ITEM NO.	NET WT.
1.875 (1-7/8)	0.875	2.500	8.375	88A-17-7	129
	1.375	2.500	8.875	88A-17-13	138
	1.875	2.500	9.375	88A-17-17	147
	2.375	3.000	10.375	88A-17-23	158
	2.875	3.500	11.375	88A-17-27	170
	3.375	3.500	11.875	88A-17-33	179
	3.875	4.000	12.875	88A-17-37	190
	4.875	4.500	14.375	88A-17-47	211
	5.875	4.500	15.375	88A-17-57	228

A	B	C	H	ASSEMBLY ITEM NO.	NET WT.
3.375 (3-3/8)	0.875	3.000	10.375	88A-33-7	158
	1.375	3.500	11.375	88A-33-13	170
	1.875	3.500	11.875	88A-33-17	182
	2.375	4.000	12.875	88A-33-23	190
	2.875	4.000	13.375	88A-33-27	199
	3.375	4.000	13.875	88A-33-33	208
	3.875	4.500	14.875	88A-33-37	219
	4.875	4.500	15.875	88A-33-47	237
	5.875	4.500	16.875	88A-33-57	255

A	B	C	H	ASSEMBLY ITEM NO.	NET WT.
5.875 (5-7/8)	0.875	3.500	13.375	88A-57-7	205
	1.375	3.500	13.875	88A-57-13	214
	1.875	4.000	14.875	88A-57-17	225
	2.375	4.000	15.375	88A-57-23	234
	2.875	4.000	15.875	88A-57-27	243
	3.375	4.500	16.875	88A-57-33	255
	3.875	4.500	17.375	88A-57-37	263
	4.875	4.500	18.375	88A-57-47	281
	5.875	4.500	19.375	88A-57-57	298

Other plate thickness, riser height and ejector bar length options available

CP TOP CLAMP PLATE THICKNESS	SU SUPPORT PLATE THICKNESS	BCP BOTTOM CLAMP PLATE THICKNESS	PLATE THICKNESS NO.
0.875	0.875	0.875	7
1.375	1.375	1.375	13
1.875	1.875	1.875	17
2.375	2.375	2.375	23
2.875	2.875	2.875	27
3.375	3.375	3.375	33
3.875	3.875	3.875	37
4.875	4.875	4.875	47
5.875	5.875	5.875	57

See Items 7 & 8 below.

C RISER		
C RISER HEIGHT	RISER HEIGHT NO.	S MAX. STROKE OF EJECTOR BAR
2.500	25	0.813
3.000	30	1.313
3.500	35	1.813
4.000	40	2.313
4.500	45	2.813
5.000	50	3.313
5.500	55	3.813
6.000	60	4.313

See Item 8 below.

EB EJECTOR BAR	
E LENGTH NOM.	EJECTOR BAR LENGTH NO.
7.85	8
11.85	12
15.97	16
19.97	20

See Item 6 below.

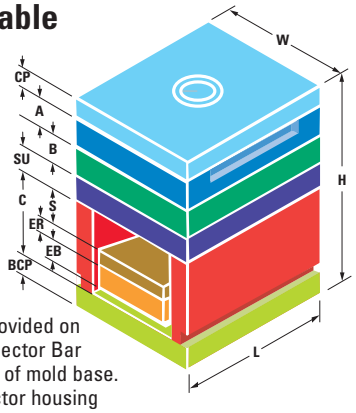

Ejector Housing Covers provided on both ends of mold when Ejector Bar Length **E** is nominal length of mold base. Customer to fabricate ejector housing covers for extended ejector bars.

WHEN ORDERING, PLEASE SPECIFY:

1. Quantity
2. Assembly Item Number (For "B" Series, replace "A" with "B")
3. Steel: #1, #2, #3 or #7 (for other steels, please specify)
4. Locating ring item number:
   Item No. 6501 (**D** = 3.990 Diameter of Locating Ring) standard
   Item No. 6504 (**D** = 3.990 Diameter of Locating Ring) clamp type
   (For other rings see DME Mold Components Catalog)
5. Type of sprue bushing, series letters: (i.e., U, UV, UR, *B, etc.)
   O = Small dia. of sprue bushing orifice: .156, .218 or .281
   R = Spherical radius of sprue bushing: .500 or .750
   (For sprue bushings see DME Mold Components Catalog)
6. Ejector Bar Length **E** (Ejector Bar Length at nominal length of mold base is highlighted in yellow. All other lengths provide an extended ejector bar)
7. Other **CP** Top Clamp Plate or **SU** Support Plate thicknesses as needed (Recommended thicknesses are highlighted in yellow)
8. Other **C** Riser heights as needed. Also, other **BCP** Bottom Clamp Plate thicknesses as needed. Riser height **C** and **BCP** Bottom Clamp Plate thicknesses which are highlighted in yellow are available in #1 Steel in a one-piece Welded Housing. Also, all Riser heights **C** and all **BCP** Bottom Clamp Plate thicknesses are available in #1 or #7 Steel in a Three-Piece Housing (for other steels, please specify)
9. Other features as needed (i.e. Guided Ejection, Lifting Holes, Pry Bar Slots, as well as Leader Pin, Return Pin, or Assembly Screw Relocations, etc.)
10. Method of shipment
    (For inch decimal to fractional conversion table, see page 278.)

7⁷/₈ x 11⁷/₈ A-Series Mold Bases

See opposite page for general dimensions, ejector stroke data, locating rings, sprue bushings, ejector bar lengths and other ordering information.

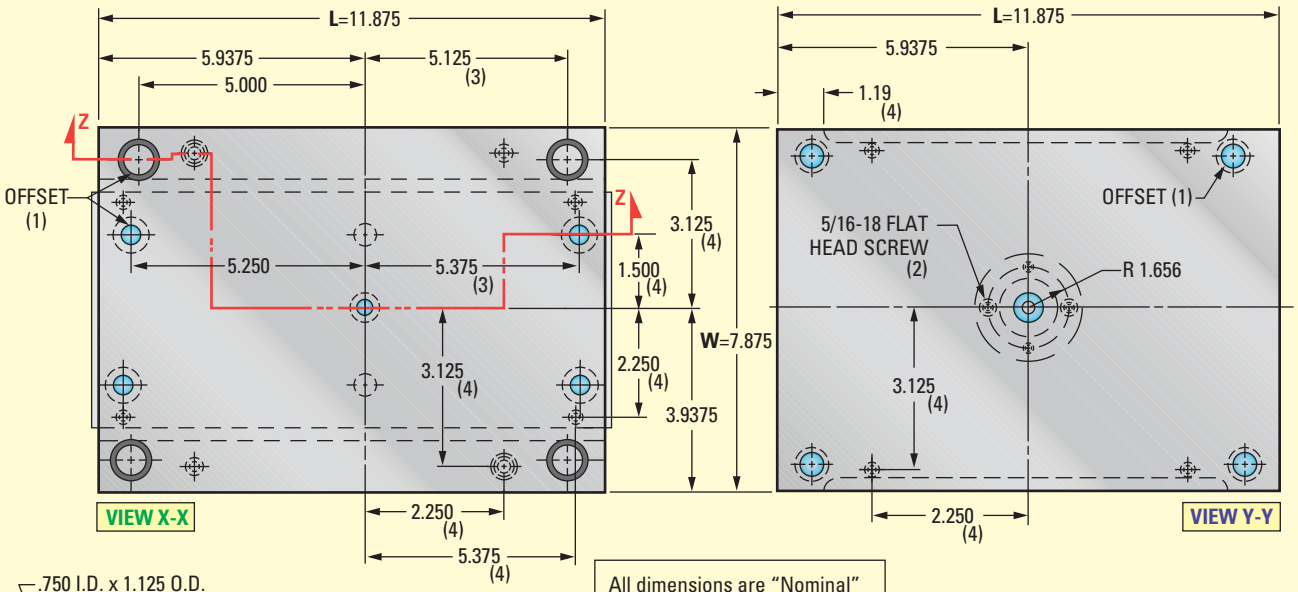

All dimensions are "Nominal" unless a tolerance is specified.

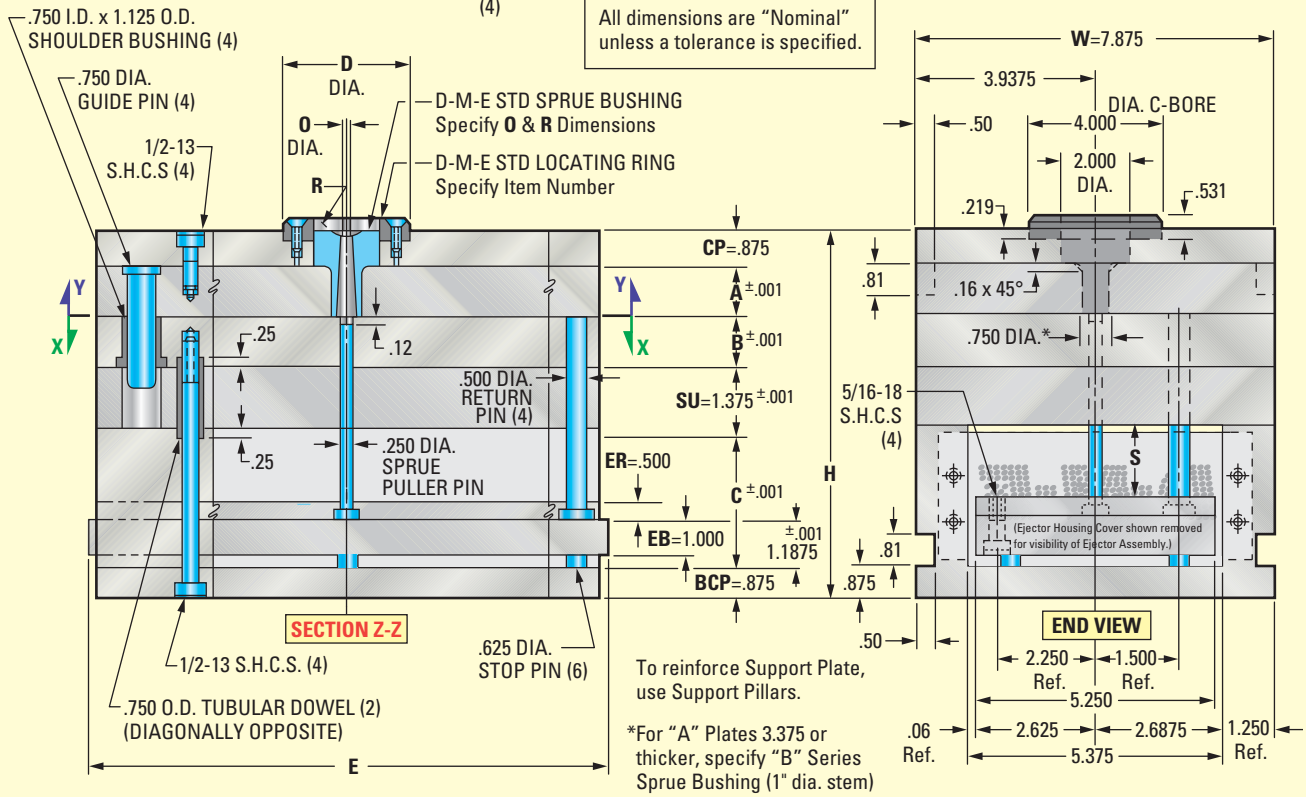

Mold Base Selections

A-Series Assembly

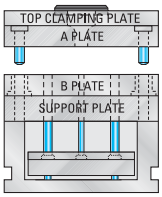

B-Series Assembly

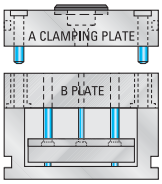

(For X-Series Stripper Plate, AX-Series and T-Series Mold Bases, see pages 173-198.)

Steel Configurations available in:

No. 1 Steel Assembly

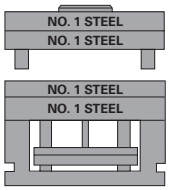

No. 2 Steel Assembly

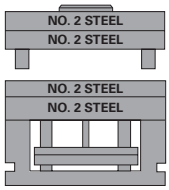

No. 3 Steel Assembly

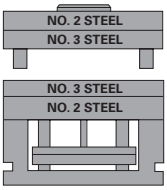

No. 7 Steel Assembly

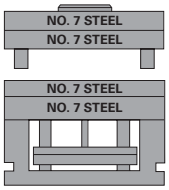

Other steel combinations also available. (Ejector Plates and Housings are No. 1 Steel, unless otherwise specified.) For additional Steel information, see page 42.

7⅞ x 11⅞ A-Series Mold Bases

A	B	C	H	ASSEMBLY ITEM NO.	NET WT.
.875 (7/8)	0.875	2.500	7.375	812A-7-7	174
	1.375	3.000	8.375	812A-7-13	191
	1.875	3.000	8.875	812A-7-17	205
	2.375	3.500	9.875	812A-7-23	222
	2.875	3.500	10.375	812A-7-27	235
	3.375	4.000	11.375	812A-7-33	253
	3.875	4.000	11.875	812A-7-37	266
	4.875	4.500	13.375	812A-7-47	297
	5.875	4.500	14.375	812A-7-57	323

A	B	C	H	ASSEMBLY ITEM NO.	NET WT.
2.375 (2-3/8)	0.875	3.000	9.375	812A-23-7	218
	1.375	3.000	9.875	812A-23-13	231
	1.875	3.500	10.875	812A-23-17	249
	2.375	3.500	11.375	812A-23-23	262
	2.875	4.000	12.375	812A-23-27	279
	3.375	4.000	12.875	812A-23-33	293
	3.875	4.000	13.375	812A-23-37	306
	4.875	4.500	14.875	812A-23-47	336
	5.875	4.500	15.875	812A-23-57	363

A	B	C	H	ASSEMBLY ITEM NO.	NET WT.
3.875 (3-7/8)	0.875	3.000	10.875	812A-37-7	258
	1.375	3.500	11.875	812A-37-13	275
	1.875	3.500	12.375	812A-37-17	288
	2.375	4.000	13.375	812A-37-23	306
	2.875	4.000	13.875	812A-37-27	319
	3.375	4.000	14.375	812A-37-33	332
	3.875	4.500	15.375	812A-37-37	350
	4.875	4.500	16.375	812A-37-47	376
	5.875	4.500	17.375	812A-37-57	403

A	B	C	H	ASSEMBLY ITEM NO.	NET WT.
1.375 (1-3/8)	0.875	2.500	7.875	812A-13-7	187
	1.375	3.000	8.875	812A-13-13	205
	1.875	3.000	9.375	812A-13-17	218
	2.375	3.500	10.375	812A-13-23	235
	2.875	3.500	10.875	812A-13-27	249
	3.375	4.000	11.875	812A-13-33	266
	3.875	4.000	12.375	812A-13-37	279
	4.875	4.500	13.875	812A-13-47	310
	5.875	4.500	14.875	812A-13-57	336

A	B	C	H	ASSEMBLY ITEM NO.	NET WT.
2.875 (2-7/8)	0.875	3.000	9.875	812A-27-7	231
	1.375	3.000	10.375	812A-27-13	244
	1.875	3.500	11.375	812A-27-17	262
	2.375	3.500	11.875	812A-27-23	275
	2.875	4.000	12.875	812A-27-27	293
	3.375	4.000	13.375	812A-27-33	306
	3.875	4.000	13.875	812A-27-37	319
	4.875	4.500	15.375	812A-27-47	350
	5.875	4.500	16.375	812A-27-57	376

A	B	C	H	ASSEMBLY ITEM NO.	NET WT.
4.875 (4-7/8)	0.875	3.500	12.375	812A-47-7	288
	1.375	3.500	12.875	812A-47-13	302
	1.875	4.000	13.875	812A-47-17	319
	2.375	4.000	14.375	812A-47-23	332
	2.875	4.000	14.875	812A-47-27	346
	3.375	4.500	15.875	812A-47-33	363
	3.875	4.500	16.375	812A-47-37	376
	4.875	4.500	17.375	812A-47-47	403
	5.875	4.500	18.375	812A-47-57	429

A	B	C	H	ASSEMBLY ITEM NO.	NET WT.
1.875 (1-7/8)	0.875	2.500	8.375	812A-17-7	200
	1.375	3.000	9.375	812A-17-13	218
	1.875	3.500	10.375	812A-17-17	235
	2.375	3.500	10.875	812A-17-23	249
	2.875	4.000	11.875	812A-17-27	266
	3.375	4.000	12.375	812A-17-33	279
	3.875	4.000	12.875	812A-17-37	293
	4.875	4.500	14.375	812A-17-47	323
	5.875	4.500	15.375	812A-17-57	350

A	B	C	H	ASSEMBLY ITEM NO.	NET WT.
3.375 (3-3/8)	0.875	3.000	10.375	812A-33-7	244
	1.375	3.500	11.375	812A-33-13	262
	1.875	3.500	11.875	812A-33-17	275
	2.375	4.000	12.875	812A-33-23	293
	2.875	4.000	13.375	812A-33-27	306
	3.375	4.000	13.875	812A-33-33	319
	3.875	4.500	14.875	812A-33-37	336
	4.875	4.500	15.875	812A-33-47	363
	5.875	4.500	16.875	812A-33-57	389

A	B	C	H	ASSEMBLY ITEM NO.	NET WT.
5.875 (5-7/8)	0.875	3.500	13.375	812A-57-7	315
	1.375	3.500	13.875	812A-57-13	328
	1.875	4.000	14.875	812A-57-17	346
	2.375	4.000	15.375	812A-57-23	359
	2.875	4.000	15.875	812A-57-27	372
	3.375	4.500	16.875	812A-57-33	389
	3.875	4.500	17.375	812A-57-37	403
	4.875	4.500	18.375	812A-57-47	429
	5.875	4.500	19.375	812A-57-57	456

Other plate thickness, riser height and ejector bar length options available

CP TOP CLAMP PLATE THICKNESS	SU SUPPORT PLATE THICKNESS	BCP BOTTOM CLAMP PLATE THICKNESS	PLATE THICKNESS NO.
0.875	0.875	0.875	7
1.375	1.375	1.375	13
1.875	1.875	1.875	17
2.375	2.375	2.375	23
2.875	2.875	2.875	27
3.375	3.375	3.375	33
3.875	3.875	3.875	37
4.875	4.875	4.875	47
5.875	5.875	5.875	57

See Items 7 & 8 below.

C RISER		
C RISER HEIGHT	RISER HEIGHT NO.	S MAX. STROKE OF EJECTOR BAR
2.500	25	0.813
3.000	30	1.313
3.500	35	1.813
4.000	40	2.313
4.500	45	2.813
5.000	50	3.313
5.500	55	3.813
6.000	60	4.313

See Item 8 below.

EB EJECTOR BAR	
E LENGTH NOM.	EJECTOR BAR LENGTH NO.
11.85	12
15.97	16
19.97	20

See Item 6 below.

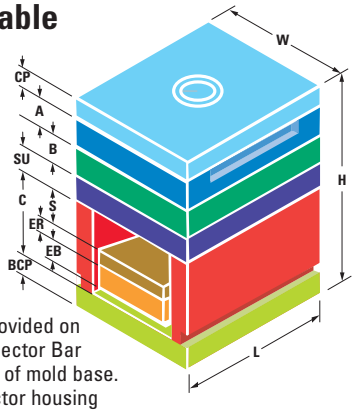

Ejector Housing Covers provided on both ends of mold when Ejector Bar Length **E** is nominal length of mold base. Customer to fabricate ejector housing covers for extended ejector bars.

WHEN ORDERING, PLEASE SPECIFY:

1. Quantity
2. Assembly Item Number (For "B" Series, replace "A" with "B")
3. Steel: #1, #2, #3 or #7 (for other steels, please specify)
4. Locating ring item number:
   Item No. 6501 (**D** = 3.990 Diameter of Locating Ring) standard
   Item No. 6504 (**D** = 3.990 Diameter of Locating Ring) clamp type
   (For other rings see DME Mold Components Catalog)
5. Type of sprue bushing, series letters: (i.e., U, UV, UR, *B, etc.)
   O = Small dia. of sprue bushing orifice: .156, .218 or .281
   R = Spherical radius of sprue bushing: .500 or .750
   (For sprue bushings see DME Mold Components Catalog)
6. Ejector Bar Length **E** (Ejector Bar Length at nominal length of mold base is highlighted in yellow. All other lengths provide an extended ejector bar)
7. Other **CP** Top Clamp Plate or **SU** Support Plate thicknesses as needed (Recommended thicknesses are highlighted in yellow)
8. Other **C** Riser heights as needed. Also, other **BCP** Bottom Clamp Plate thicknesses as needed. Riser height **C** and **BCP** Bottom Clamp Plate thicknesses which are highlighted in yellow are available in #1 Steel in a one-piece Welded Housing. Also, all Riser heights **C** and all **BCP** Bottom Clamp Plate thicknesses are available in #1 or #7 Steel in a Three-Piece Housing (for other steels, please specify)
9. Other features as needed (i.e. Guided Ejection, Lifting Holes, Pry Bar Slots, as well as Leader Pin, Return Pin, or Assembly Screw Relocations, etc.)
10. Method of shipment
    (For inch decimal to fractional conversion table, see page 278.)

9⅞ x 8" A-Series Mold Bases

See opposite page for general dimensions, ejector stroke data, locating rings, sprue bushings, ejector bar lengths and other ordering information.

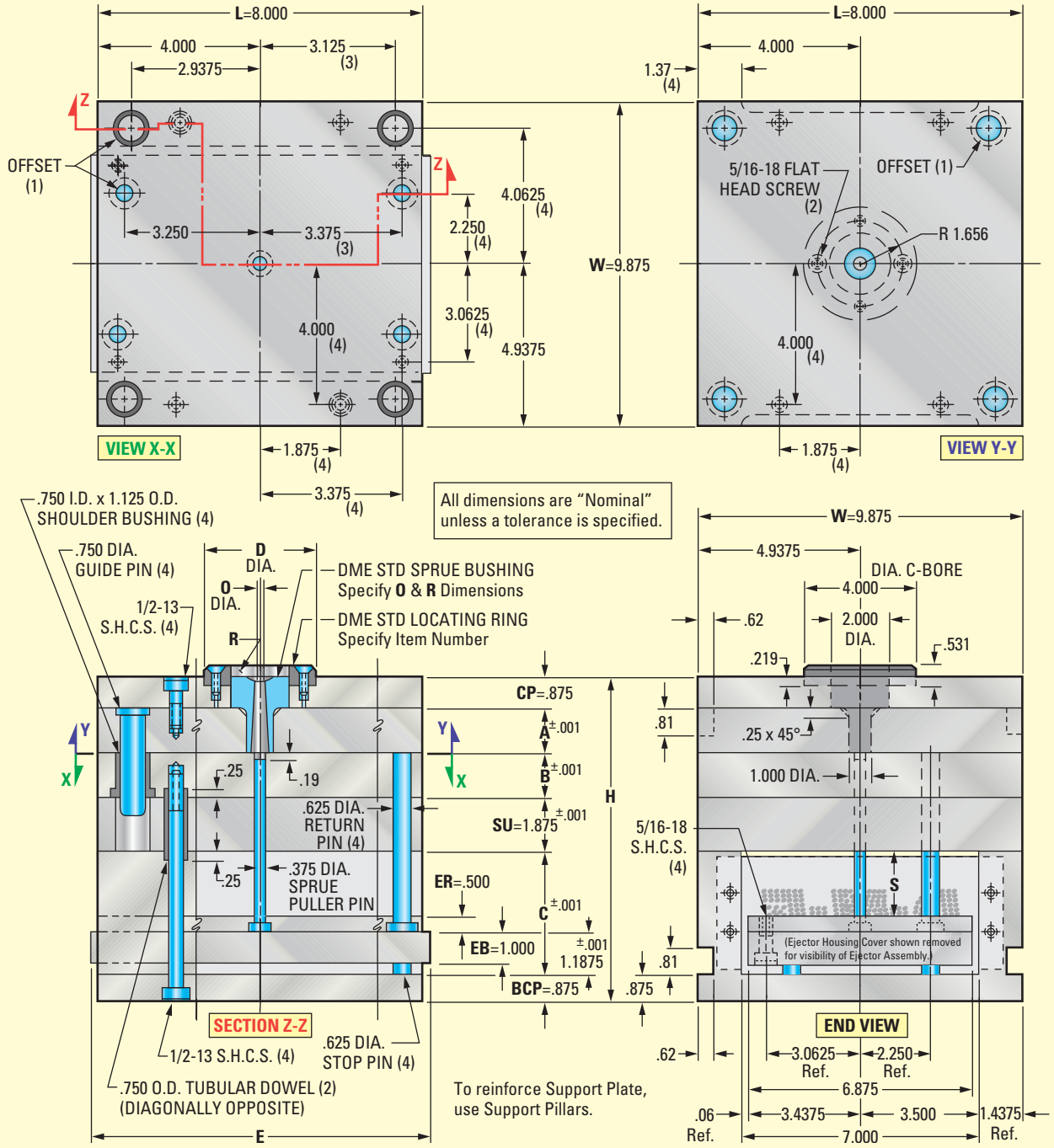

Mold Base Selections

A-Series Assembly

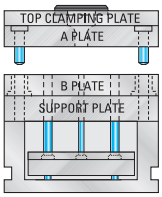

B-Series Assembly

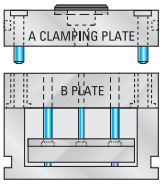

(For X-Series Stripper Plate, AX-Series and T-Series Mold Bases, see pages 173-198.)

Steel Configurations available in:

No. 1 Steel Assembly

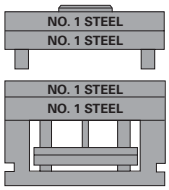

No. 2 Steel Assembly

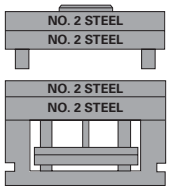

No. 3 Steel Assembly

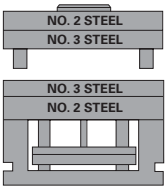

No. 7 Steel Assembly

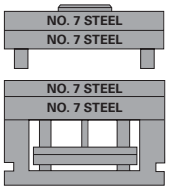

Other steel combinations also available. (Ejector Plates and Housings are No. 1 Steel, unless otherwise specified.) For additional Steel information, see page 42.

9⁷/₈ x 8" A-Series Mold Bases

A	B	C	H	ASSEMBLY ITEM NO.	NET WT.
.875 (7/8)	0.875	2.500	7.875	108A-7-7	158
	1.375	2.500	8.375	108A-7-13	169
	1.875	2.500	8.875	108A-7-17	181
	2.375	3.000	9.875	108A-7-23	195
	2.875	3.500	10.875	108A-7-27	209
	3.375	4.000	11.875	108A-7-33	224
	3.875	4.000	12.375	108A-7-37	236
	4.875	4.500	13.875	108A-7-47	261
	5.875	4.500	14.875	108A-7-57	284

A	B	C	H	ASSEMBLY ITEM NO.	NET WT.
2.375 (2-3/8)	0.875	3.000	9.875	108A-23-7	195
	1.375	3.000	10.375	108A-23-13	206
	1.875	3.500	11.375	108A-23-17	221
	2.375	3.500	11.875	108A-23-23	232
	2.875	4.000	12.875	108A-23-27	246
	3.375	4.000	13.375	108A-23-33	257
	3.875	4.000	13.875	108A-23-37	269
	4.875	4.500	15.375	108A-23-47	294
	5.875	4.500	16.375	108A-23-57	317

A	B	C	H	ASSEMBLY ITEM NO.	NET WT.
3.875 (3-7/8)	0.875	3.000	11.375	108A-37-7	229
	1.375	3.500	12.375	108A-37-13	243
	1.875	3.500	12.875	108A-37-17	254
	2.375	4.000	13.875	108A-37-23	269
	2.875	4.000	14.375	108A-37-27	280
	3.375	4.000	14.875	108A-37-33	291
	3.875	4.500	15.875	108A-37-37	306
	4.875	4.500	16.875	108A-37-47	328
	5.875	4.500	17.875	108A-37-57	350

A	B	C	H	ASSEMBLY ITEM NO.	NET WT.
1.375 (1-3/8)	0.875	2.500	8.375	108A-13-7	169
	1.375	2.500	8.875	108A-13-13	181
	1.875	3.000	9.875	108A-13-17	196
	2.375	3.500	10.875	108A-13-23	209
	2.875	3.500	11.375	108A-13-27	221
	3.375	4.000	12.375	108A-13-33	235
	3.875	4.000	12.875	108A-13-37	246
	4.875	4.500	14.375	108A-13-47	272
	5.875	4.500	15.375	108A-13-57	294

A	B	C	H	ASSEMBLY ITEM NO.	NET WT.
2.875 (2-7/8)	0.875	3.000	10.375	108A-27-7	206
	1.375	3.000	10.875	108A-27-13	217
	1.875	3.500	11.875	108A-27-17	232
	2.375	3.500	12.375	108A-27-23	244
	2.875	4.000	13.375	108A-27-27	257
	3.375	4.000	13.875	108A-27-33	269
	3.875	4.000	14.375	108A-27-37	280
	4.875	4.500	15.875	108A-27-47	306
	5.875	4.500	16.875	108A-27-57	328

A	B	C	H	ASSEMBLY ITEM NO.	NET WT.
4.875 (4-7/8)	0.875	3.500	12.875	108A-47-7	254
	1.375	3.500	13.375	108A-47-13	265
	1.875	4.000	14.375	108A-47-17	280
	2.375	4.000	14.875	108A-47-23	291
	2.875	4.000	15.375	108A-47-27	302
	3.375	4.500	16.375	108A-47-33	317
	3.875	4.500	16.875	108A-47-37	328
	4.875	4.500	17.875	108A-47-47	350
	5.875	4.500	18.875	108A-47-57	373

A	B	C	H	ASSEMBLY ITEM NO.	NET WT.
1.875 (1-7/8)	0.875	2.500	8.875	108A-17-7	181
	1.375	3.000	9.875	108A-17-13	195
	1.875	3.500	10.875	108A-17-17	209
	2.375	3.500	11.375	108A-17-23	221
	2.875	4.000	12.375	108A-17-27	235
	3.375	4.000	12.875	108A-17-33	246
	3.875	4.000	13.375	108A-17-37	257
	4.875	4.500	14.875	108A-17-47	283
	5.875	4.500	15.875	108A-17-57	306

A	B	C	H	ASSEMBLY ITEM NO.	NET WT.
3.375 (3-3/8)	0.875	3.000	10.875	108A-33-7	217
	1.375	3.500	11.875	108A-33-13	232
	1.875	3.500	12.375	108A-33-17	243
	2.375	4.000	13.375	108A-33-23	257
	2.875	4.000	13.875	108A-33-27	269
	3.375	4.000	14.375	108A-33-33	280
	3.875	4.500	15.375	108A-33-37	294
	4.875	4.500	16.375	108A-33-47	317
	5.875	4.500	17.375	108A-33-57	339

A	B	C	H	ASSEMBLY ITEM NO.	NET WT.
5.875 (5-7/8)	0.875	3.500	13.875	108A-57-7	277
	1.375	3.500	14.375	108A-57-13	288
	1.875	4.000	15.375	108A-57-17	302
	2.375	4.000	15.875	108A-57-23	313
	2.875	4.000	16.375	108A-57-27	325
	3.375	4.500	17.375	108A-57-33	339
	3.875	4.500	17.875	108A-57-37	350
	4.875	4.500	18.875	108A-57-47	373
	5.875	4.500	19.875	108A-57-57	395

Other plate thickness, riser height and ejector bar length options available

CP TOP CLAMP PLATE THICKNESS	SU SUPPORT PLATE THICKNESS	BCP BOTTOM CLAMP PLATE THICKNESS	PLATE THICKNESS NO.
0.875	0.875	0.875	7
1.375	1.375	1.375	13
1.875	1.875	1.875	17
2.375	2.375	2.375	23
2.875	2.875	2.875	27
3.375	3.375	3.375	33
3.875	3.875	3.875	37
4.875	4.875	4.875	47
5.875	5.875	5.875	57

See Items 7 & 8 below.

C RISER		
C RISER HEIGHT	RISER HEIGHT NO.	S MAX. STROKE OF EJECTOR BAR
2.500	25	0.813
3.000	30	1.313
3.500	35	1.813
4.000	40	2.313
4.500	45	2.813
5.000	50	3.313
5.500	55	3.813
6.000	60	4.313

See Item 8 below.

EB EJECTOR BAR	
E LENGTH NOM.	EJECTOR BAR LENGTH NO.
7.97	8
11.85	12
15.97	16
19.97	20
23.47	23
29.47	29

See Item 6 below.
Ejector Housing Covers provided on both ends of mold when Ejector Bar Length **E** is nominal length of mold base. Customer to fabricate ejector housing covers for extended ejector bars.

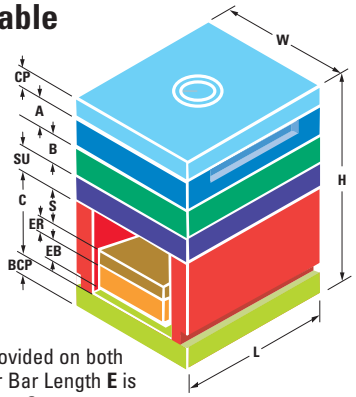

WHEN ORDERING, PLEASE SPECIFY:

1. Quantity
2. Assembly Item Number (For "B" Series, replace "A" with "B")
3. Steel: #1, #2, #3 or #7 (for other steels, please specify)
4. Locating ring item number:
   Item No. 6501 (**D** = 3.990 Diameter of Locating Ring) standard
   Item No. 6504 (**D** = 3.990 Diameter of Locating Ring) clamp type
   (For other rings see DME Mold Components Catalog)
5. Type of sprue bushing, series letters: (i.e., B, etc.)
   O = Small dia. of sprue bushing orifice: .156, .218, .281 or .343
   R = Spherical radius of sprue bushing: .500 or .750
   (For sprue bushings see DME Mold Components Catalog)
6. Ejector Bar Length **E** (Ejector Bar Length at nominal length of mold base is highlighted in yellow. All other lengths provide an extended ejector bar)
7. Other **CP** Top Clamp Plate or **SU** Support Plate thicknesses as needed (Recommended thicknesses are highlighted in yellow)
8. Other **C** Riser heights as needed. Also, other **BCP** Bottom Clamp Plate thicknesses as needed. Riser height **C** and **BCP** Bottom Clamp Plate thicknesses which are highlighted in yellow are available in #1 Steel in a one-piece Welded Housing. Also, all Riser heights **C** and all **BCP** Bottom Clamp Plate thicknesses are available in #1 or #7 Steel in a Three-Piece Housing (for other steels, please specify)
9. Other features as needed (i.e. Guided Ejection, Lifting Holes, Pry Bar Slots, as well as Leader Pin, Return Pin, or Assembly Screw Relocations, etc.)
10. Method of shipment
    (For inch decimal to fractional conversion table, see page 278.)

9⁷/₈ x 11⁷/₈ A-Series Mold Bases

See opposite page for general dimensions, ejector stroke data, locating rings, sprue bushings, ejector bar lengths and other ordering information.

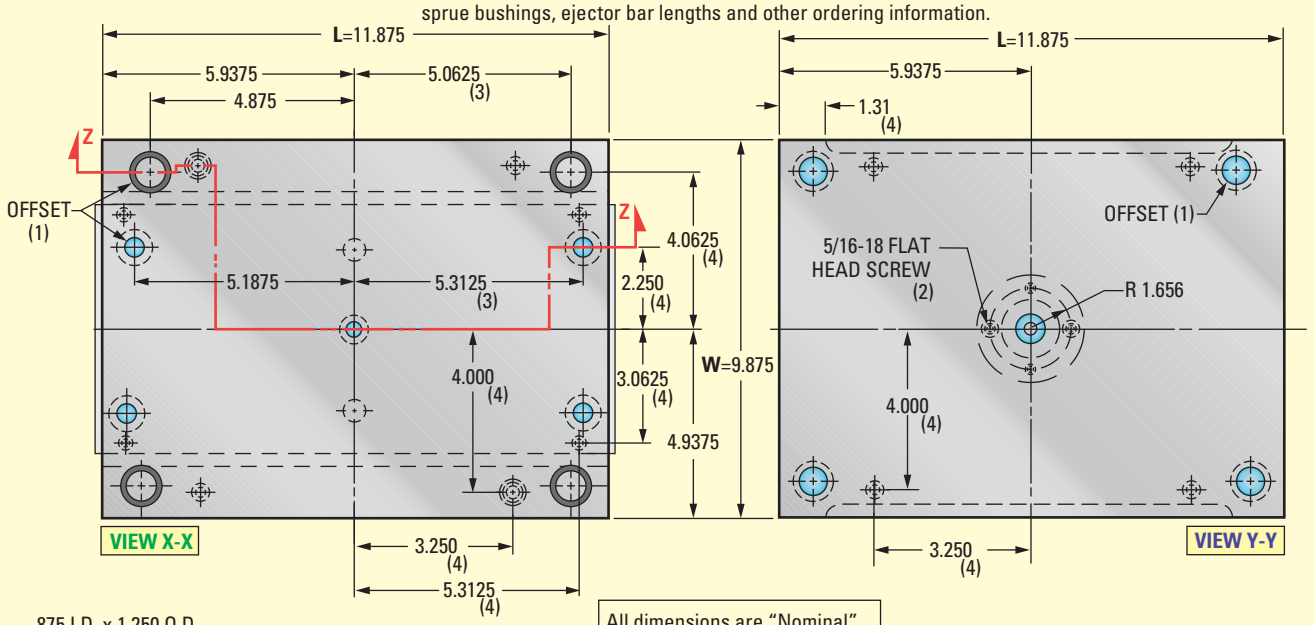

All dimensions are "Nominal" unless a tolerance is specified.

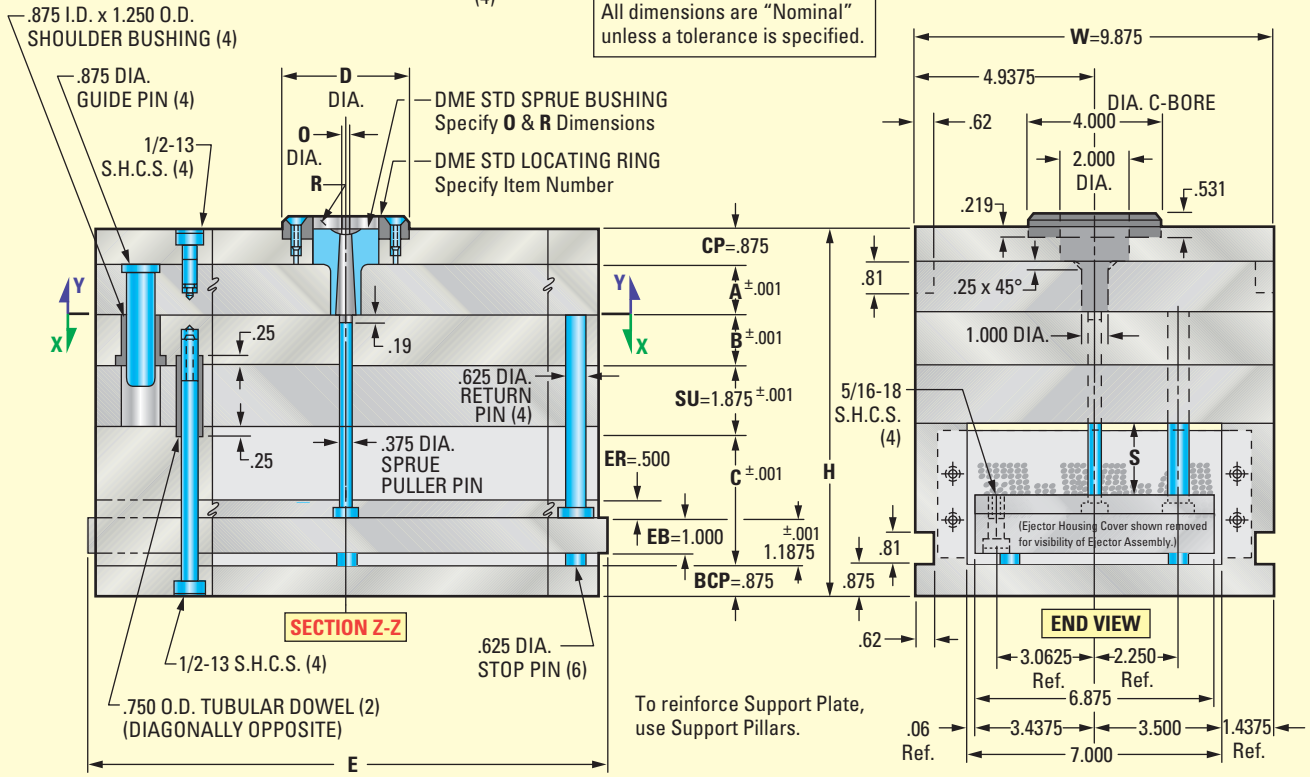

Mold Base Selections

A-Series Assembly

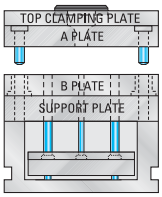

B-Series Assembly

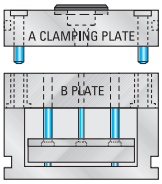

(For X-Series Stripper Plate, AX-Series and T-Series Mold Bases, see pages 173-198.)

Steel Configurations available in:

No. 1 Steel Assembly

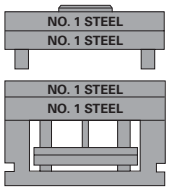

No. 2 Steel Assembly

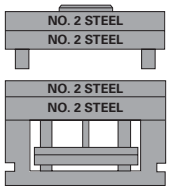

No. 3 Steel Assembly

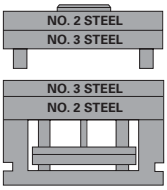

No. 7 Steel Assembly

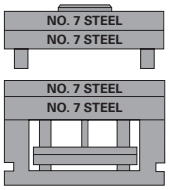

Other steel combinations also available. (Ejector Plates and Housings are No. 1 Steel, unless otherwise specified.) For additional Steel information, see page 42.

9⁷⁄₈ x 11⁷⁄₈ A-Series Mold Bases

A	B	C	H	ASSEMBLY ITEM NO.	NET WT.
.875 (7/8)	0.875	2.500	7.875	1012A-7-7	235
	1.375	3.000	8.875	1012A-7-13	256
	1.875	3.000	9.375	1012A-7-17	273
	2.375	3.500	10.375	1012A-7-23	294
	2.875	3.500	10.875	1012A-7-27	311
	3.375	4.000	11.875	1012A-7-33	332
	3.875	4.000	12.375	1012A-7-37	349
	4.875	4.500	13.875	1012A-7-47	387
	5.875	4.500	14.875	1012A-7-57	420

A	B	C	H	ASSEMBLY ITEM NO.	NET WT.
2.375 (2-3/8)	0.875	3.000	9.875	1012A-23-7	289
	1.375	3.000	10.375	1012A-23-13	306
	1.875	3.500	11.375	1012A-23-17	327
	2.375	3.500	11.875	1012A-23-23	344
	2.875	4.000	12.875	1012A-23-27	365
	3.375	4.000	13.375	1012A-23-33	382
	3.875	4.000	13.875	1012A-23-37	399
	4.875	4.500	15.375	1012A-23-47	437
	5.875	4.500	16.375	1012A-23-57	470

A	B	C	H	ASSEMBLY ITEM NO.	NET WT.
3.875 (3-7/8)	0.875	3.000	11.375	1012A-37-7	339
	1.375	3.500	12.375	1012A-37-13	361
	1.875	3.500	12.875	1012A-37-17	377
	2.375	4.000	13.875	1012A-37-23	399
	2.875	4.000	14.375	1012A-37-27	415
	3.375	4.000	14.875	1012A-37-33	432
	3.875	4.500	15.875	1012A-37-37	453
	4.875	4.500	16.875	1012A-37-47	486
	5.875	4.500	17.875	1012A-37-57	520

A	B	C	H	ASSEMBLY ITEM NO.	NET WT.
1.375 (1-3/8)	0.875	2.500	8.375	1012A-13-7	251
	1.375	3.000	9.375	1012A-13-13	273
	1.875	3.000	9.875	1012A-13-17	289
	2.375	3.500	10.875	1012A-13-23	311
	2.875	3.500	11.375	1012A-13-27	327
	3.375	4.000	12.375	1012A-13-33	349
	3.875	4.000	12.875	1012A-13-37	365
	4.875	4.500	14.375	1012A-13-47	403
	5.875	4.500	15.375	1012A-13-57	437

A	B	C	H	ASSEMBLY ITEM NO.	NET WT.
2.875 (2-7/8)	0.875	3.000	10.375	1012A-27-7	306
	1.375	3.000	10.875	1012A-27-13	322
	1.875	3.500	11.875	1012A-27-17	344
	2.375	3.500	12.375	1012A-27-23	361
	2.875	4.000	13.375	1012A-27-27	382
	3.375	4.000	13.875	1012A-27-33	399
	3.875	4.000	14.375	1012A-27-37	415
	4.875	4.500	15.875	1012A-27-47	453
	5.875	4.500	16.875	1012A-27-57	486

A	B	C	H	ASSEMBLY ITEM NO.	NET WT.
4.875 (4-7/8)	0.875	3.500	12.875	1012A-47-7	377
	1.375	3.500	13.375	1012A-47-13	394
	1.875	4.000	14.375	1012A-47-17	415
	2.375	4.000	14.875	1012A-47-23	432
	2.875	4.000	15.375	1012A-47-27	448
	3.375	4.500	16.375	1012A-47-33	470
	3.875	4.500	16.875	1012A-47-37	486
	4.875	4.500	17.875	1012A-47-47	520
	5.875	4.500	18.875	1012A-47-57	553

A	B	C	H	ASSEMBLY ITEM NO.	NET WT.
1.875 (1-7/8)	0.875	2.500	8.875	1012A-17-7	268
	1.375	3.000	9.875	1012A-17-13	289
	1.875	3.500	10.875	1012A-17-17	311
	2.375	3.500	11.375	1012A-17-23	327
	2.875	4.000	12.375	1012A-17-27	349
	3.375	4.000	12.875	1012A-17-33	365
	3.875	4.000	13.375	1012A-17-37	382
	4.875	4.500	14.875	1012A-17-47	420
	5.875	4.500	15.875	1012A-17-57	453

A	B	C	H	ASSEMBLY ITEM NO.	NET WT.
3.375 (3-3/8)	0.875	3.000	10.875	1012A-33-7	322
	1.375	3.500	11.875	1012A-33-13	344
	1.875	3.500	12.375	1012A-33-17	361
	2.375	4.000	13.375	1012A-33-23	382
	2.875	4.000	13.875	1012A-33-27	399
	3.375	4.000	14.375	1012A-33-33	415
	3.875	4.500	15.375	1012A-33-37	437
	4.875	4.500	16.375	1012A-33-47	470
	5.875	4.500	17.375	1012A-33-57	503

A	B	C	H	ASSEMBLY ITEM NO.	NET WT.
5.875 (5-7/8)	0.875	3.500	13.875	1012A-57-7	410
	1.375	3.500	14.375	1012A-57-13	427
	1.875	4.000	15.375	1012A-57-17	448
	2.375	4.000	15.875	1012A-57-23	465
	2.875	4.000	16.375	1012A-57-27	482
	3.375	4.500	17.375	1012A-57-33	503
	3.875	4.500	17.875	1012A-57-37	520
	4.875	4.500	18.875	1012A-57-47	553
	5.875	4.500	19.875	1012A-57-57	586

Other plate thickness, riser height and ejector bar length options available

CP TOP CLAMP PLATE THICKNESS	SU SUPPORT PLATE THICKNESS	BCP BOTTOM CLAMP PLATE THICKNESS	PLATE THICKNESS NO.
0.875	0.875	0.875	7
1.375	1.375	1.375	13
1.875	1.875	1.875	17
2.375	2.375	2.375	23
2.875	2.875	2.875	27
3.375	3.375	3.375	33
3.875	3.875	3.875	37
4.875	4.875	4.875	47
5.875	5.875	5.875	57

See Items 7 & 8 below.

C RISER		
C RISER HEIGHT	RISER HEIGHT NO.	S MAX. STROKE OF EJECTOR BAR
2.500	25	0.813
3.000	30	1.313
3.500	35	1.813
4.000	40	2.313
4.500	45	2.813
5.000	50	3.313
5.500	55	3.813
6.000	60	4.313

See Item 8 below.

EB EJECTOR BAR	
E LENGTH NOM.	EJECTOR BAR LENGTH NO.
11.85	12
15.97	16
19.97	20
23.47	23
29.47	29

See Item 6 below.

Ejector Housing Covers provided on both ends of mold when Ejector Bar Length **E** is nominal length of mold base. Customer to fabricate ejector housing covers for extended ejector bars.

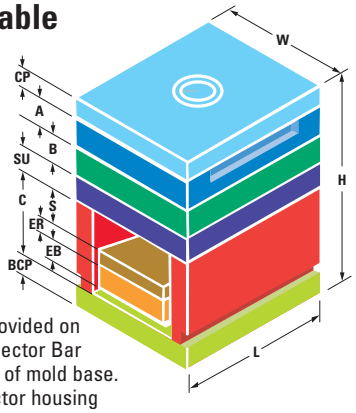

WHEN ORDERING, PLEASE SPECIFY:

1. Quantity
2. Assembly Item Number (For "B" Series, replace "A" with "B")
3. Steel: #1, #2, #3 or #7 (for other steels, please specify)
4. Locating ring item number:
   Item No. 6501 (**D** = 3.990 Diameter of Locating Ring) standard
   Item No. 6504 (**D** = 3.990 Diameter of Locating Ring) clamp type
   (For other rings see DME Mold Components Catalog)
5. Type of sprue bushing, series letters: (i.e., B, etc.)
   O = Small dia. of sprue bushing orifice: .156, .218, .281 or .343
   R = Spherical radius of sprue bushing: .500 or .750
   (For sprue bushings see DME Mold Components Catalog)
6. Ejector Bar Length **E** (Ejector Bar Length at nominal length of mold base is highlighted in yellow. All other lengths provide an extended ejector bar)
7. Other **CP** Top Clamp Plate or **SU** Support Plate thicknesses as needed (Recommended thicknesses are highlighted in yellow)
8. Other **C** Riser heights as needed. Also, other **BCP** Bottom Clamp Plate thicknesses as needed. Riser height **C** and **BCP** Bottom Clamp Plate thicknesses which are highlighted in yellow are available in #1 Steel in a one-piece Welded Housing. Also, all Riser heights **C** and all **BCP** Bottom Clamp Plate thicknesses are available in #1 or #7 Steel in a Three-Piece Housing (for other steels, please specify)
9. Other features as needed (i.e. Guided Ejection, Lifting Holes, Pry Bar Slots, as well as Leader Pin, Return Pin, or Assembly Screw Relocations, etc.)
10. Method of shipment
    (For inch decimal to fractional conversion table, see page 278.)

9⅞ x 16" A-Series Mold Bases

See opposite page for general dimensions, ejector stroke data, locating rings, sprue bushings, ejector bar lengths and other ordering information.

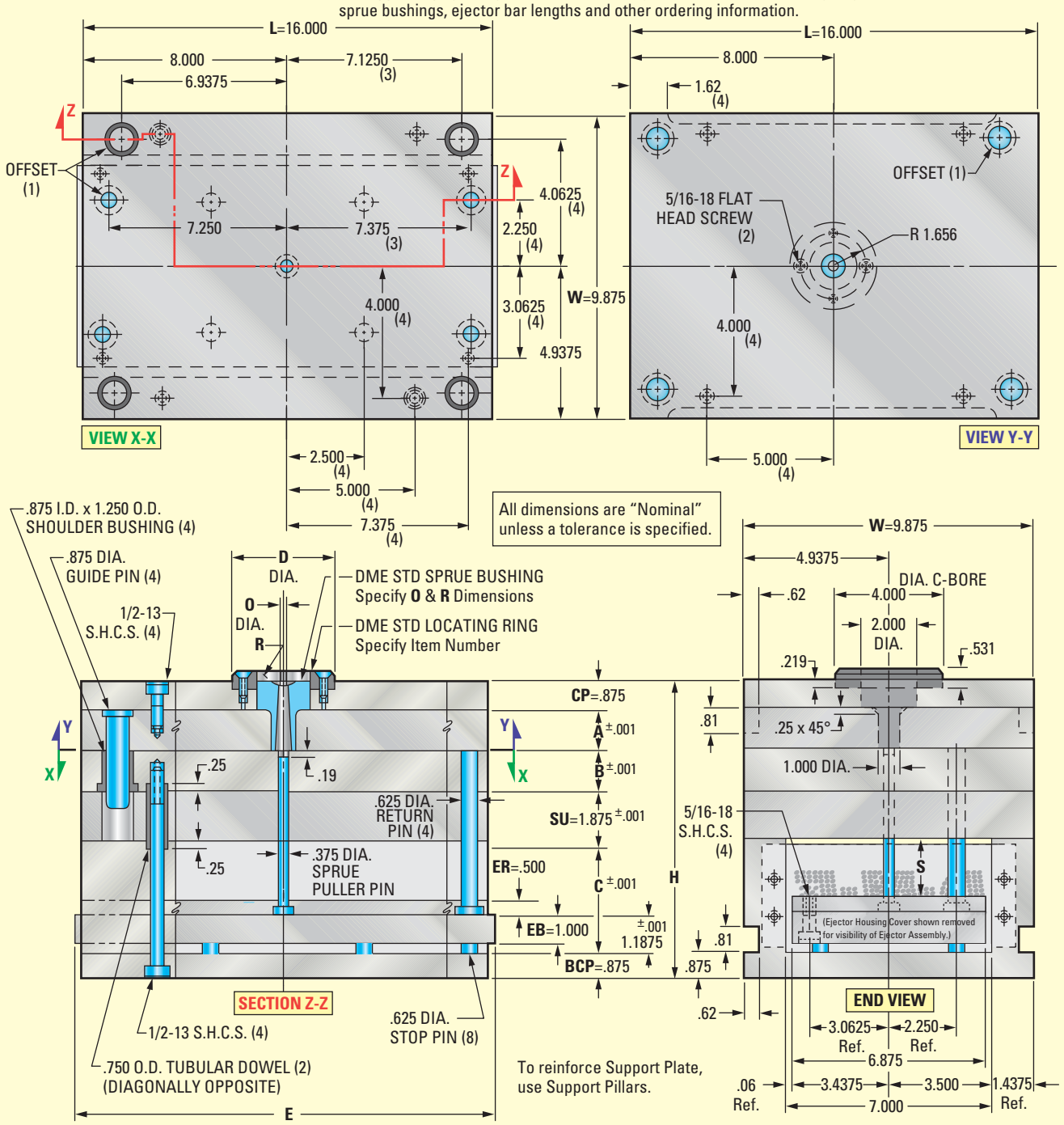

Mold Base Selections

A-Series Assembly

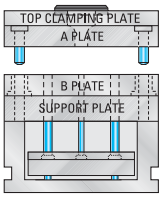

B-Series Assembly

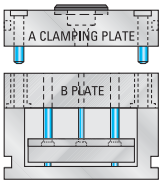

(For X-Series Stripper Plate, AX-Series and T-Series Mold Bases, see pages 173-198.)

Steel Configurations available in:

No. 1 Steel Assembly

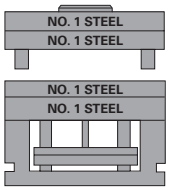

No. 2 Steel Assembly

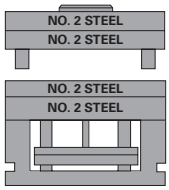

No. 3 Steel Assembly

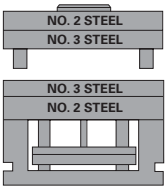

No. 7 Steel Assembly

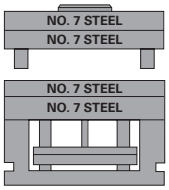

Other steel combinations also available. (Ejector Plates and Housings are No. 1 Steel, unless otherwise specified.) For additional Steel information, see page 42.

9⅞ x 16" A-Series Mold Bases

A	B	C	H	ASSEMBLY ITEM NO.	NET WT.
.875 (7/8)	0.875	2.500	7.875	1016A-7-7	316
	1.375	3.000	8.875	1016A-7-13	345
	1.875	3.000	9.375	1016A-7-17	367
	2.375	3.500	10.375	1016A-7-23	396
	2.875	3.500	10.875	1016A-7-27	418
	3.375	4.000	11.875	1016A-7-33	447
	3.875	4.000	12.375	1016A-7-37	470
	4.875	4.500	13.875	1016A-7-47	521
	5.875	4.500	14.875	1016A-7-57	566

A	B	C	H	ASSEMBLY ITEM NO.	NET WT.
2.375 (2-3/8)	0.875	3.000	9.875	1016A-23-7	389
	1.375	3.000	10.375	1016A-23-13	412
	1.875	3.500	11.375	1016A-23-17	441
	2.375	3.500	11.875	1016A-23-23	463
	2.875	4.000	12.875	1016A-23-27	492
	3.375	4.000	13.375	1016A-23-33	514
	3.875	4.000	13.875	1016A-23-37	537
	4.875	4.500	15.375	1016A-23-47	588
	5.875	4.500	16.375	1016A-23-57	633

A	B	C	H	ASSEMBLY ITEM NO.	NET WT.
3.875 (3-7/8)	0.875	3.000	11.375	1016A-37-7	457
	1.375	3.500	12.375	1016A-37-13	485
	1.875	3.500	12.875	1016A-37-17	508
	2.375	4.000	13.875	1016A-37-23	537
	2.875	4.000	14.375	1016A-37-27	559
	3.375	4.000	14.875	1016A-37-33	582
	3.875	4.500	15.875	1016A-37-37	610
	4.875	4.500	16.875	1016A-37-47	655
	5.875	4.500	17.875	1016A-37-57	700

A	B	C	H	ASSEMBLY ITEM NO.	NET WT.
1.375 (1-3/8)	0.875	2.500	8.375	1016A-13-7	338
	1.375	3.000	9.375	1016A-13-13	367
	1.875	3.000	9.875	1016A-13-17	389
	2.375	3.500	10.875	1016A-13-23	418
	2.875	3.500	11.375	1016A-13-27	441
	3.375	4.000	12.375	1016A-13-33	470
	3.875	4.000	12.875	1016A-13-37	492
	4.875	4.500	14.375	1016A-13-47	543
	5.875	4.500	15.375	1016A-13-57	588

A	B	C	H	ASSEMBLY ITEM NO.	NET WT.
2.875 (2-7/8)	0.875	3.000	10.375	1016A-27-7	412
	1.375	3.000	10.875	1016A-27-13	434
	1.875	3.500	11.875	1016A-27-17	463
	2.375	3.500	12.375	1016A-27-23	485
	2.875	4.000	13.375	1016A-27-27	514
	3.375	4.000	13.875	1016A-27-33	537
	3.875	4.000	14.375	1016A-27-37	559
	4.875	4.500	15.875	1016A-27-47	610
	5.875	4.500	16.875	1016A-27-57	655

A	B	C	H	ASSEMBLY ITEM NO.	NET WT.
4.875 (4-7/8)	0.875	3.500	12.875	1016A-47-7	508
	1.375	3.500	13.375	1016A-47-13	530
	1.875	4.000	14.375	1016A-47-17	559
	2.375	4.000	14.875	1016A-47-23	582
	2.875	4.000	15.375	1016A-47-27	604
	3.375	4.500	16.375	1016A-47-33	633
	3.875	4.500	16.875	1016A-47-37	655
	4.875	4.500	17.875	1016A-47-47	700
	5.875	4.500	18.875	1016A-47-57	745

A	B	C	H	ASSEMBLY ITEM NO.	NET WT.
1.875 (1-7/8)	0.875	2.500	8.875	1016A-17-7	361
	1.375	3.000	9.875	1016A-17-13	389
	1.875	3.500	10.875	1016A-17-17	418
	2.375	3.500	11.375	1016A-17-23	441
	2.875	4.000	12.375	1016A-17-27	470
	3.375	4.000	12.875	1016A-17-33	492
	3.875	4.000	13.375	1016A-17-37	514
	4.875	4.500	14.875	1016A-17-47	566
	5.875	4.500	15.875	1016A-17-57	610

A	B	C	H	ASSEMBLY ITEM NO.	NET WT.
3.375 (3-3/8)	0.875	3.000	10.875	1016A-33-7	434
	1.375	3.500	11.875	1016A-33-13	463
	1.875	3.500	12.375	1016A-33-17	485
	2.375	4.000	13.375	1016A-33-23	514
	2.875	4.000	13.875	1016A-33-27	537
	3.375	4.000	14.375	1016A-33-33	559
	3.875	4.500	15.375	1016A-33-37	588
	4.875	4.500	16.375	1016A-33-47	633
	5.875	4.500	17.375	1016A-33-57	678

A	B	C	H	ASSEMBLY ITEM NO.	NET WT.
5.875 (5-7/8)	0.875	3.500	13.875	1016A-57-7	553
	1.375	3.500	14.375	1016A-57-13	575
	1.875	4.000	15.375	1016A-57-17	604
	2.375	4.000	15.875	1016A-57-23	626
	2.875	4.000	16.375	1016A-57-27	649
	3.375	4.500	17.375	1016A-57-33	678
	3.875	4.500	17.875	1016A-57-37	700
	4.875	4.500	18.875	1016A-57-47	745
	5.875	4.500	19.875	1016A-57-57	789

Other plate thickness, riser height and ejector bar length options available

CP TOP CLAMP PLATE THICKNESS	SU SUPPORT PLATE THICKNESS	BCP BOTTOM CLAMP PLATE THICKNESS	PLATE THICKNESS NO.
0.875	0.875	0.875	7
1.375	1.375	1.375	13
1.875	1.875	1.875	17
2.375	2.375	2.375	23
2.875	2.875	2.875	27
3.375	3.375	3.375	33
3.875	3.875	3.875	37
4.875	4.875	4.875	47
5.875	5.875	5.875	57

See Items 7 & 8 below.

C RISER		
C RISER HEIGHT	RISER HEIGHT NO.	S MAX. STROKE OF EJECTOR BAR
2.500	25	0.813
3.000	30	1.313
3.500	35	1.813
4.000	40	2.313
4.500	45	2.813
5.000	50	3.313
5.500	55	3.813
6.000	60	4.313

See Item 8 below.

EB EJECTOR BAR	
E LENGTH NOM.	EJECTOR BAR LENGTH NO.
15.97	16
19.97	20
23.47	23
29.47	29

See Item 6 below.

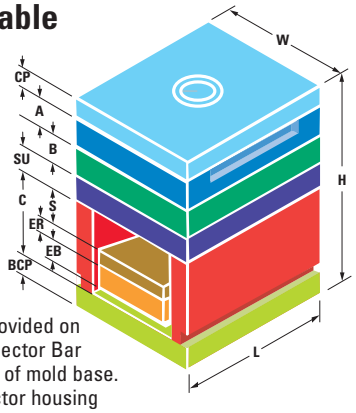

Ejector Housing Covers provided on both ends of mold when Ejector Bar Length **E** is nominal length of mold base. Customer to fabricate ejector housing covers for extended ejector bars.

WHEN ORDERING, PLEASE SPECIFY:

1. Quantity
2. Assembly Item Number (For "B" Series, replace "A" with "B")
3. Steel: #1, #2, #3 or #7 (for other steels, please specify)
4. Locating ring item number:
   Item No. 6501 (**D** = 3.990 Diameter of Locating Ring) standard
   Item No. 6504 (**D** = 3.990 Diameter of Locating Ring) clamp type
   (For other rings see DME Mold Components Catalog)
5. Type of sprue bushing, series letters: (i.e., B, etc.)
   O = Small dia. of sprue bushing orifice: .156, .218, .281 or .343
   R = Spherical radius of sprue bushing: .500 or .750
   (For sprue bushings see DME Mold Components Catalog)
6. Ejector Bar Length **E** (Ejector Bar Length at nominal length of mold base is highlighted in yellow. All other lengths provide an extended ejector bar)
7. Other **CP** Top Clamp Plate or **SU** Support Plate thicknesses as needed (Recommended thicknesses are highlighted in yellow)
8. Other **C** Riser heights as needed. Also, other **BCP** Bottom Clamp Plate thicknesses as needed. Riser height **C** and **BCP** Bottom Clamp Plate thicknesses which are highlighted in yellow are available in #1 Steel in a one-piece Welded Housing. Also, all Riser heights **C** and all **BCP** Bottom Clamp Plate thicknesses are available in #1 or #7 Steel in a Three-Piece Housing (for other steels, please specify)
9. Other features as needed (i.e. Guided Ejection, Lifting Holes, Pry Bar Slots, as well as Leader Pin, Return Pin, or Assembly Screw Relocations, etc.)
10. Method of shipment
    (For inch decimal to fractional conversion table, see page 278.)

9⅞ x 20" A-Series Mold Bases

See opposite page for general dimensions, ejector stroke data, locating rings, sprue bushings, ejector bar lengths and other ordering information.

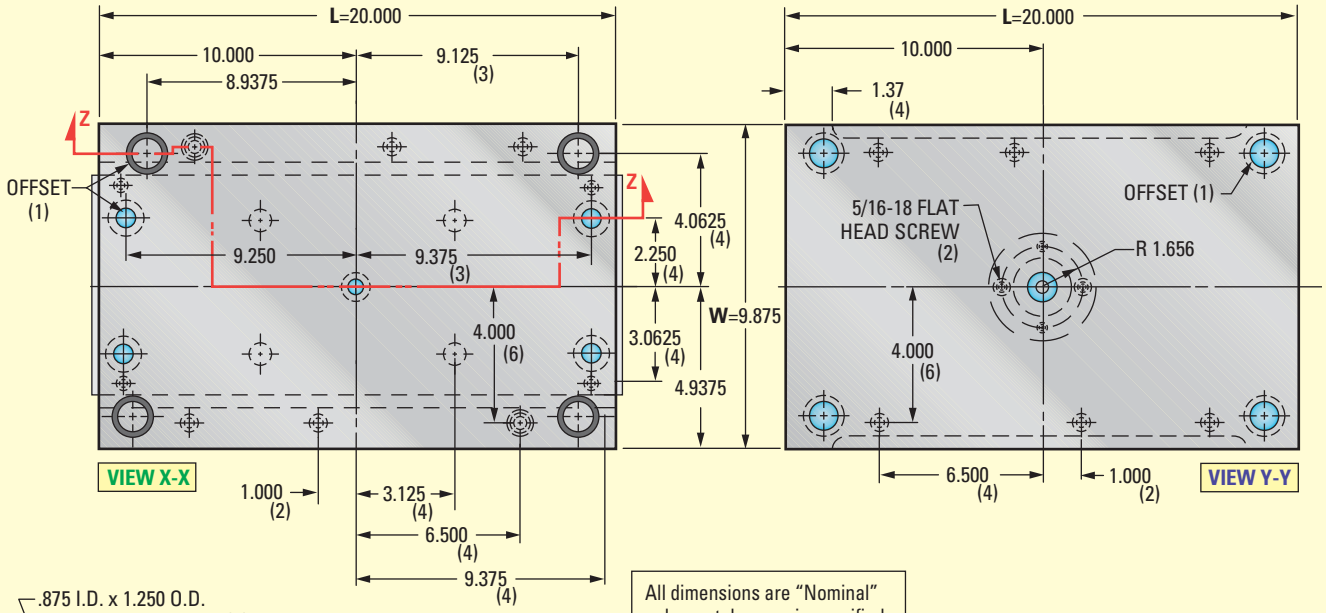

All dimensions are "Nominal" unless a tolerance is specified.

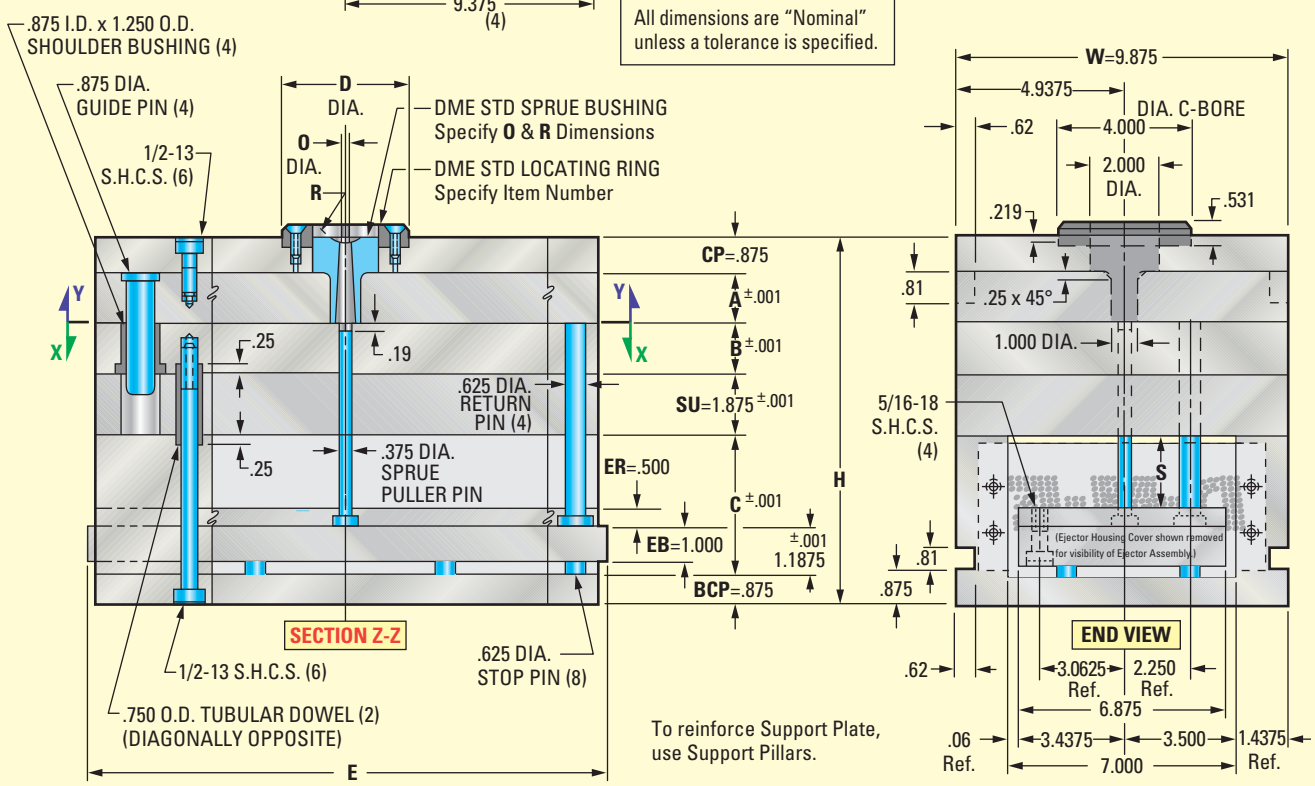

To reinforce Support Plate, use Support Pillars.

Mold Base Selections

A-Series Assembly

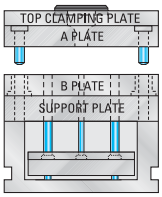

B-Series Assembly

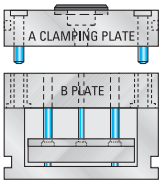

(For X-Series Stripper Plate, AX-Series and T-Series Mold Bases, see pages 173-198.)

Steel Configurations available in:

No. 1 Steel Assembly

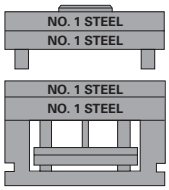

No. 2 Steel Assembly

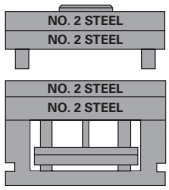

No. 3 Steel Assembly

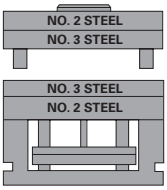

No. 7 Steel Assembly

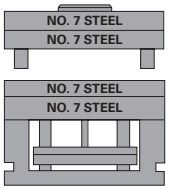

Other steel combinations also available. (Ejector Plates and Housings are No. 1 Steel, unless otherwise specified.) For additional Steel information, see page 42.

9⅞ x 20" A-Series Mold Bases

A	B	C	H	ASSEMBLY ITEM NO.	NET WT.
.875 (7/8)	0.875	2.500	7.875	1020A-7-7	395
	1.375	3.000	8.875	1020A-7-13	431
	1.875	3.000	9.375	1020A-7-17	459
	2.375	3.500	10.375	1020A-7-23	495
	2.875	3.500	10.875	1020A-7-27	523
	3.375	4.000	11.875	1020A-7-33	559
	3.875	4.000	12.375	1020A-7-37	587
	4.875	4.500	13.875	1020A-7-47	651
	5.875	4.500	14.875	1020A-7-57	707

A	B	C	H	ASSEMBLY ITEM NO.	NET WT.
2.375 (2-3/8)	0.875	3.000	9.875	1020A-23-7	487
	1.375	3.000	10.375	1020A-23-13	515
	1.875	3.500	11.375	1020A-23-17	551
	2.375	3.500	11.875	1020A-23-23	579
	2.875	4.000	12.875	1020A-23-27	615
	3.375	4.000	13.375	1020A-23-33	643
	3.875	4.000	13.875	1020A-23-37	671
	4.875	4.500	15.375	1020A-23-47	735
	5.875	4.500	16.375	1020A-23-57	791

A	B	C	H	ASSEMBLY ITEM NO.	NET WT.
3.875 (3-7/8)	0.875	3.000	11.375	1020A-37-7	571
	1.375	3.500	12.375	1020A-37-13	607
	1.875	3.500	12.875	1020A-37-17	635
	2.375	4.000	13.875	1020A-37-23	671
	2.875	4.000	14.375	1020A-37-27	699
	3.375	4.000	14.875	1020A-37-33	727
	3.875	4.500	15.875	1020A-37-37	763
	4.875	4.500	16.875	1020A-37-47	819
	5.875	4.500	17.875	1020A-37-57	875

A	B	C	H	ASSEMBLY ITEM NO.	NET WT.
1.375 (1-3/8)	0.875	2.500	8.375	1020A-13-7	423
	1.375	3.000	9.375	1020A-13-13	459
	1.875	3.000	9.875	1020A-13-17	487
	2.375	3.500	10.875	1020A-13-23	523
	2.875	3.500	11.375	1020A-13-27	551
	3.375	4.000	12.375	1020A-13-33	587
	3.875	4.000	12.875	1020A-13-37	615
	4.875	4.500	14.375	1020A-13-47	679
	5.875	4.500	15.375	1020A-13-57	735

A	B	C	H	ASSEMBLY ITEM NO.	NET WT.
2.875 (2-7/8)	0.875	3.000	10.375	1020A-27-7	515
	1.375	3.000	10.875	1020A-27-13	543
	1.875	3.500	11.875	1020A-27-17	579
	2.375	3.500	12.375	1020A-27-23	607
	2.875	4.000	13.375	1020A-27-27	643
	3.375	4.000	13.875	1020A-27-33	671
	3.875	4.000	14.375	1020A-27-37	699
	4.875	4.500	15.875	1020A-27-47	763
	5.875	4.500	16.875	1020A-27-57	819

A	B	C	H	ASSEMBLY ITEM NO.	NET WT.
4.875 (4-7/8)	0.875	3.500	12.875	1020A-47-7	635
	1.375	3.500	13.375	1020A-47-13	663
	1.875	4.000	14.375	1020A-47-17	699
	2.375	4.000	14.875	1020A-47-23	727
	2.875	4.000	15.375	1020A-47-27	755
	3.375	4.500	16.375	1020A-47-33	791
	3.875	4.500	16.875	1020A-47-37	819
	4.875	4.500	17.875	1020A-47-47	875
	5.875	4.500	18.875	1020A-47-57	931

A	B	C	H	ASSEMBLY ITEM NO.	NET WT.
1.875 (1-7/8)	0.875	2.500	8.875	1020A-17-7	451
	1.375	3.000	9.875	1020A-17-13	487
	1.875	3.500	10.875	1020A-17-17	523
	2.375	3.500	11.375	1020A-17-23	551
	2.875	4.000	12.375	1020A-17-27	587
	3.375	4.000	12.875	1020A-17-33	615
	3.875	4.000	13.375	1020A-17-37	643
	4.875	4.500	14.875	1020A-17-47	707
	5.875	4.500	15.875	1020A-17-57	763

A	B	C	H	ASSEMBLY ITEM NO.	NET WT.
3.375 (3-3/8)	0.875	3.000	10.875	1020A-33-7	543
	1.375	3.500	11.875	1020A-33-13	579
	1.875	3.500	12.375	1020A-33-17	607
	2.375	4.000	13.375	1020A-33-23	643
	2.875	4.000	13.875	1020A-33-27	671
	3.375	4.000	14.375	1020A-33-33	699
	3.875	4.500	15.375	1020A-33-37	735
	4.875	4.500	16.375	1020A-33-47	791
	5.875	4.500	17.375	1020A-33-57	847

A	B	C	H	ASSEMBLY ITEM NO.	NET WT.
5.875 (5-7/8)	0.875	3.500	13.875	1020A-57-7	691
	1.375	3.500	14.375	1020A-57-13	719
	1.875	4.000	15.375	1020A-57-17	755
	2.375	4.000	15.875	1020A-57-23	783
	2.875	4.000	16.375	1020A-57-27	811
	3.375	4.500	17.375	1020A-57-33	847
	3.875	4.500	17.875	1020A-57-37	875
	4.875	4.500	18.875	1020A-57-47	931
	5.875	4.500	19.875	1020A-57-57	987

Other plate thickness, riser height and ejector bar length options available

CP TOP CLAMP PLATE THICKNESS	SU SUPPORT PLATE THICKNESS	BCP BOTTOM CLAMP PLATE THICKNESS	PLATE THICKNESS NO.
0.875	0.875	0.875	7
1.375	1.375	1.375	13
1.875	1.875	1.875	17
2.375	2.375	2.375	23
2.875	2.875	2.875	27
3.375	3.375	3.375	33
3.875	3.875	3.875	37
4.875	4.875	4.875	47
5.875	5.875	5.875	57

See Items 7 & 8 below.

C RISER		
C RISER HEIGHT	RISER HEIGHT NO.	S MAX. STROKE OF EJECTOR BAR
2.500	25	0.813
3.000	30	1.313
3.500	35	1.813
4.000	40	2.313
4.500	45	2.813
5.000	50	3.313
5.500	55	3.813
6.000	60	4.313

See Item 8 below.

EB EJECTOR BAR	
E LENGTH NOM.	EJECTOR BAR LENGTH NO.
19.97	20
23.47	23
29.47	29

See Item 6 below.

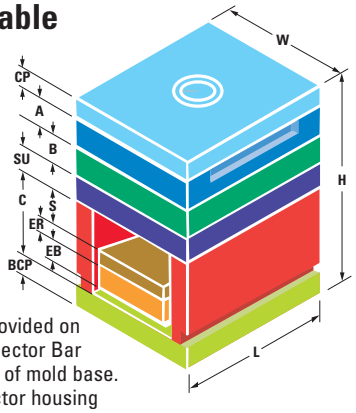

Ejector Housing Covers provided on both ends of mold when Ejector Bar Length **E** is nominal length of mold base. Customer to fabricate ejector housing covers for extended ejector bars.

WHEN ORDERING, PLEASE SPECIFY:

1. Quantity
2. Assembly Item Number (For "B" Series, replace "A" with "B")
3. Steel: #1, #2, #3 or #7 (for other steels, please specify)
4. Locating ring item number:
   Item No. 6501 (**D** = 3.990 Diameter of Locating Ring) standard
   Item No. 6504 (**D** = 3.990 Diameter of Locating Ring) clamp type
   (For other rings see DME Mold Components Catalog)
5. Type of sprue bushing, series letters: (i.e., B, etc.)
   O = Small dia. of sprue bushing orifice: .156, .218, .281 or .343
   R = Spherical radius of sprue bushing: .500 or .750
   (For sprue bushings see DME Mold Components Catalog)
6. Ejector Bar Length **E** (Ejector Bar Length at nominal length of mold base is highlighted in yellow. All other lengths provide an extended ejector bar)
7. Other **CP** Top Clamp Plate or **SU** Support Plate thicknesses as needed (Recommended thicknesses are highlighted in yellow)
8. Other **C** Riser heights as needed. Also, other **BCP** Bottom Clamp Plate thicknesses as needed. Riser height **C** and **BCP** Bottom Clamp Plate thicknesses which are highlighted in yellow are available in #1 Steel in a one-piece Welded Housing. Also, all Riser heights **C** and all **BCP** Bottom Clamp Plate thicknesses are available in #1 or #7 Steel in a Three-Piece Housing (for other steels, please specify)
9. Other features as needed (i.e. Guided Ejection, Lifting Holes, Pry Bar Slots, as well as Leader Pin, Return Pin, or Assembly Screw Relocations, etc.)
10. Method of shipment
    (For inch decimal to fractional conversion table, see page 278.)

10⅞ x 12" A-Series Mold Bases

See opposite page for general dimensions, ejector stroke data, locating rings, sprue bushings, ejector bar lengths and other ordering information.

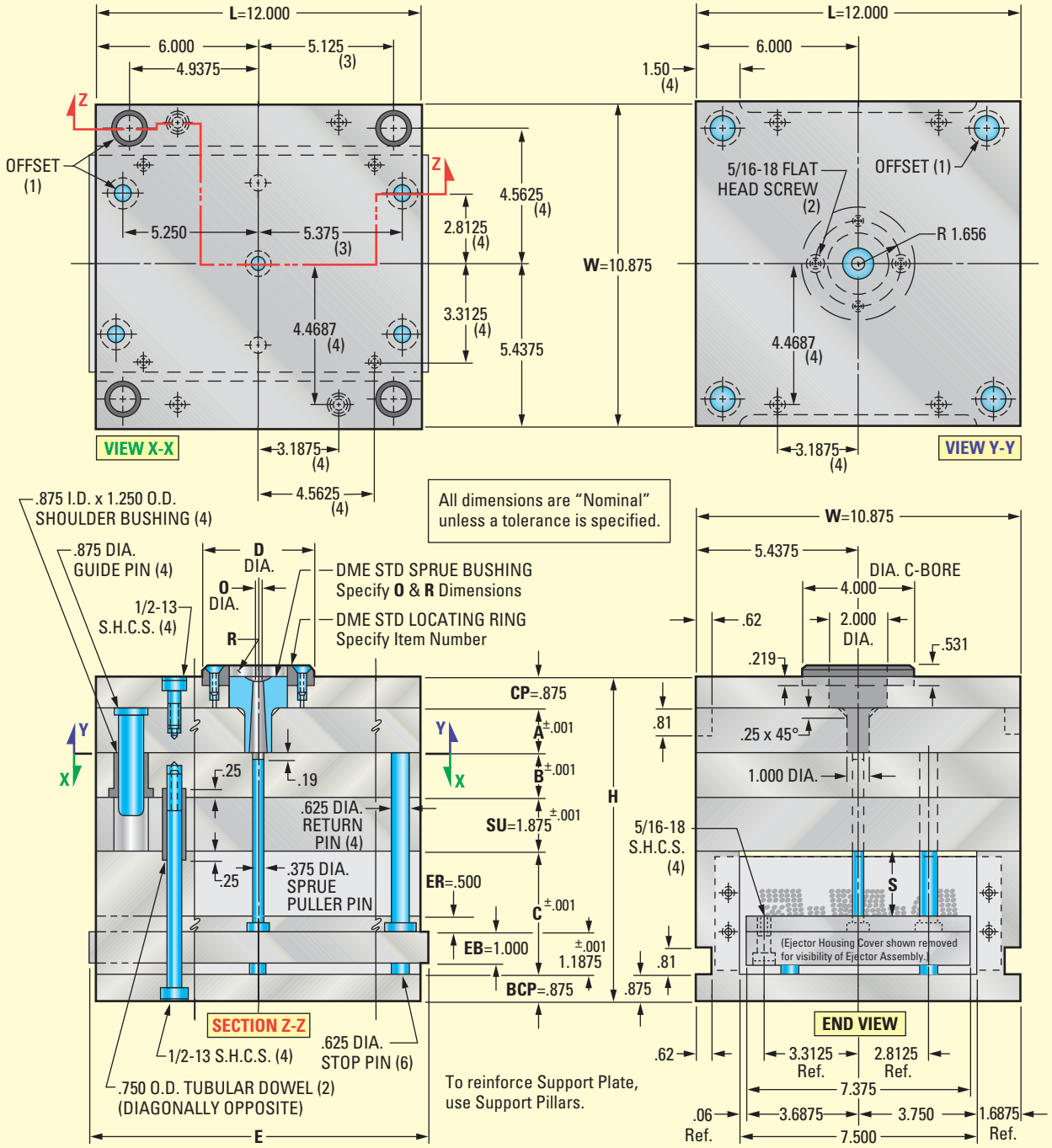

Mold Base Selections

A-Series Assembly

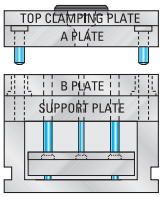

B-Series Assembly

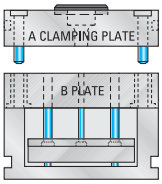

(For X-Series Stripper Plate, AX-Series and T-Series Mold Bases, see pages 173-198.)

Steel Configurations available in:

No. 1 Steel Assembly

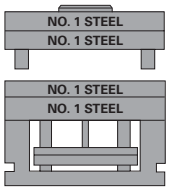

No. 2 Steel Assembly

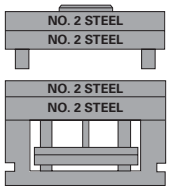

No. 3 Steel Assembly

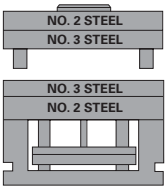

No. 7 Steel Assembly

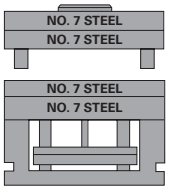

Other steel combinations also available. (Ejector Plates and Housings are No. 1 Steel, unless otherwise specified.) For additional Steel information, see page 42.

10⁷/₈ x 12" A-Series Mold Bases

A	B	C	H	ASSEMBLY ITEM NO.	NET WT.
.875 (7/8)	0.875	2.500	7.875	1112A-7-7	262
	1.375	3.000	8.875	1112A-7-13	286
	1.875	3.000	9.375	1112A-7-17	305
	2.375	3.500	10.375	1112A-7-23	329
	2.875	3.500	10.875	1112A-7-27	347
	3.375	4.000	11.875	1112A-7-33	372
	3.875	4.000	12.375	1112A-7-37	390
	4.875	4.500	13.875	1112A-7-47	433
	5.875	4.500	14.875	1112A-7-57	470

A	B	C	H	ASSEMBLY ITEM NO.	NET WT.
2.375 (2-3/8)	0.875	3.000	9.875	1112A-23-7	323
	1.375	3.000	10.375	1112A-23-13	342
	1.875	3.500	11.375	1112A-23-17	366
	2.375	3.500	11.875	1112A-23-23	384
	2.875	4.000	12.875	1112A-23-27	409
	3.375	4.000	13.375	1112A-23-33	427
	3.875	4.000	13.875	1112A-23-37	446
	4.875	4.500	15.375	1112A-23-47	488
	5.875	4.500	16.375	1112A-23-57	525

A	B	C	H	ASSEMBLY ITEM NO.	NET WT.
3.875 (3-7/8)	0.875	3.000	11.375	1112A-37-7	379
	1.375	3.500	12.375	1112A-37-13	403
	1.875	3.500	12.875	1112A-37-17	421
	2.375	4.000	13.875	1112A-37-23	446
	2.875	4.000	14.375	1112A-37-27	464
	3.375	4.000	14.875	1112A-37-33	483
	3.875	4.500	15.875	1112A-37-37	507
	4.875	4.500	16.875	1112A-37-47	544
	5.875	4.500	17.875	1112A-37-57	581

A	B	C	H	ASSEMBLY ITEM NO.	NET WT.
1.375 (1-3/8)	0.875	2.500	8.375	1112A-13-7	281
	1.375	3.000	9.375	1112A-13-13	305
	1.875	3.000	9.875	1112A-13-17	323
	2.375	3.500	10.875	1112A-13-23	347
	2.875	3.500	11.375	1112A-13-27	366
	3.375	4.000	12.375	1112A-13-33	390
	3.875	4.000	12.875	1112A-13-37	409
	4.875	4.500	14.375	1112A-13-47	451
	5.875	4.500	15.375	1112A-13-57	488

A	B	C	H	ASSEMBLY ITEM NO.	NET WT.
2.875 (2-7/8)	0.875	3.000	10.375	1112A-27-7	342
	1.375	3.000	10.875	1112A-27-13	361
	1.875	3.500	11.875	1112A-27-17	384
	2.375	3.500	12.375	1112A-27-23	403
	2.875	4.000	13.375	1112A-27-27	427
	3.375	4.000	13.875	1112A-27-33	446
	3.875	4.000	14.375	1112A-27-37	464
	4.875	4.500	15.875	1112A-27-47	507
	5.875	4.500	16.875	1112A-27-57	544

A	B	C	H	ASSEMBLY ITEM NO.	NET WT.
4.875 (4-7/8)	0.875	3.500	12.875	1112A-47-7	421
	1.375	3.500	13.375	1112A-47-13	440
	1.875	4.000	14.375	1112A-47-17	464
	2.375	4.000	14.875	1112A-47-23	483
	2.875	4.000	15.375	1112A-47-27	501
	3.375	4.500	16.375	1112A-47-33	525
	3.875	4.500	16.875	1112A-47-37	544
	4.875	4.500	17.875	1112A-47-47	581
	5.875	4.500	18.875	1112A-47-57	618

A	B	C	H	ASSEMBLY ITEM NO.	NET WT.
1.875 (1-7/8)	0.875	2.500	8.875	1112A-17-7	299
	1.375	3.000	9.875	1112A-17-13	323
	1.875	3.500	10.875	1112A-17-17	347
	2.375	3.500	11.375	1112A-17-23	366
	2.875	4.000	12.375	1112A-17-27	390
	3.375	4.000	12.875	1112A-17-33	409
	3.875	4.000	13.375	1112A-17-37	427
	4.875	4.500	14.875	1112A-17-47	470
	5.875	4.500	15.875	1112A-17-57	507

A	B	C	H	ASSEMBLY ITEM NO.	NET WT.
3.375 (3-3/8)	0.875	3.000	10.875	1112A-33-7	360
	1.375	3.500	11.875	1112A-33-13	384
	1.875	3.500	12.375	1112A-33-17	403
	2.375	4.000	13.375	1112A-33-23	427
	2.875	4.000	13.875	1112A-33-27	446
	3.375	4.000	14.375	1112A-33-33	464
	3.875	4.500	15.375	1112A-33-37	488
	4.875	4.500	16.375	1112A-33-47	525
	5.875	4.500	17.375	1112A-33-57	563

A	B	C	H	ASSEMBLY ITEM NO.	NET WT.
5.875 (5-7/8)	0.875	3.500	13.875	1112A-57-7	458
	1.375	3.500	14.375	1112A-57-13	477
	1.875	4.000	15.375	1112A-57-17	501
	2.375	4.000	15.875	1112A-57-23	520
	2.875	4.000	16.375	1112A-57-27	538
	3.375	4.500	17.375	1112A-57-33	562
	3.875	4.500	17.875	1112A-57-37	581
	4.875	4.500	18.875	1112A-57-47	618
	5.875	4.500	19.875	1112A-57-57	655

Other plate thickness, riser height and ejector bar length options available

CP TOP CLAMP PLATE THICKNESS	SU SUPPORT PLATE THICKNESS	BCP BOTTOM CLAMP PLATE THICKNESS	PLATE THICKNESS NO.
0.875	0.875	0.875	7
1.375	1.375	1.375	13
1.875	1.875	1.875	17
2.375	2.375	2.375	23
2.875	2.875	2.875	27
3.375	3.375	3.375	33
3.875	3.875	3.875	37
4.875	4.875	4.875	47
5.875	5.875	5.875	57

See Items 7 & 8 below.

C RISER		
C RISER HEIGHT	RISER HEIGHT NO.	S MAX. STROKE OF EJECTOR BAR
2.500	25	0.813
3.000	30	1.313
3.500	35	1.813
4.000	40	2.313
4.500	45	2.813
5.000	50	3.313
5.500	55	3.813
6.000	60	4.313

See Item 8 below.

EB EJECTOR BAR	
E LENGTH NOM.	EJECTOR BAR LENGTH NO.
11.97	12
13.97	14
17.97	18
23.47	23
29.47	29

See Item 6 below.

Ejector Housing Covers provided on both ends of mold when Ejector Bar Length **E** is nominal length of mold base. Customer to fabricate ejector housing covers for extended ejector bars.

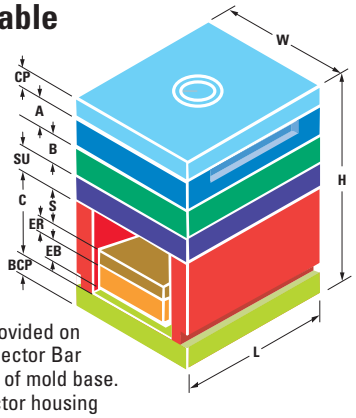

WHEN ORDERING, PLEASE SPECIFY:

1. Quantity
2. Assembly Item Number (For "B" Series, replace "A" with "B")
3. Steel: #1, #2, #3 or #7 (for other steels, please specify)
4. Locating ring item number:
   Item No. 6501 (**D** = 3.990 Diameter of Locating Ring) standard
   Item No. 6504 (**D** = 3.990 Diameter of Locating Ring) clamp type
   (For other rings see DME Mold Components Catalog)
5. Type of sprue bushing, series letters: (i.e., B, etc.)
   O = Small dia. of sprue bushing orifice: .156, .218, .281 or .343
   R = Spherical radius of sprue bushing: .500 or .750
   (For sprue bushings see DME Mold Components Catalog)
6. Ejector Bar Length **E** (Ejector Bar Length at nominal length of mold base is highlighted in yellow. All other lengths provide an extended ejector bar)
7. Other **CP** Top Clamp Plate or **SU** Support Plate thicknesses as needed (Recommended thicknesses are highlighted in yellow)
8. Other **C** Riser heights as needed. Also, other **BCP** Bottom Clamp Plate thicknesses as needed. Riser height **C** and **BCP** Bottom Clamp Plate thicknesses which are highlighted in yellow are available in #1 Steel in a one-piece Welded Housing. Also, all Riser heights **C** and all **BCP** Bottom Clamp Plate thicknesses are available in #1 or #7 Steel in a Three-Piece Housing (for other steels, please specify)
9. Other features as needed (i.e. Guided Ejection, Lifting Holes, Pry Bar Slots, as well as Leader Pin, Return Pin, or Assembly Screw Relocations, etc.)
10. Method of shipment
    (For inch decimal to fractional conversion table, see page 278.)

10⁷/₈ x 14" A-Series Mold Bases

See opposite page for general dimensions, ejector stroke data, locating rings, sprue bushings, ejector bar lengths and other ordering information.

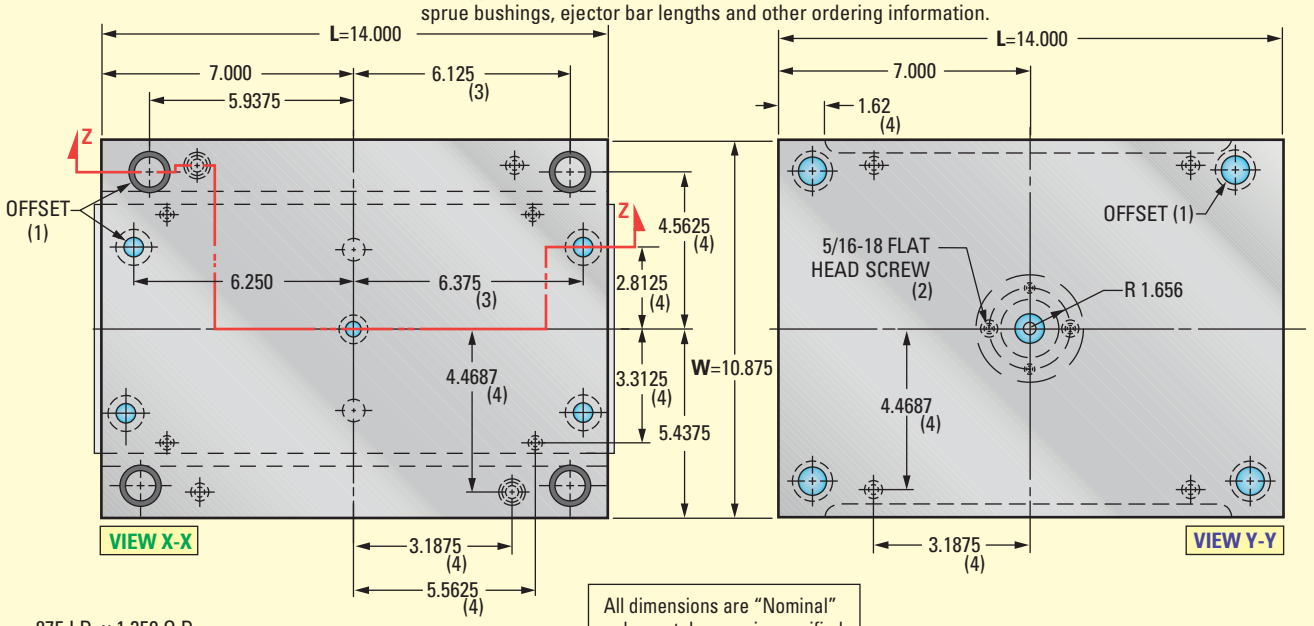

All dimensions are "Nominal" unless a tolerance is specified.

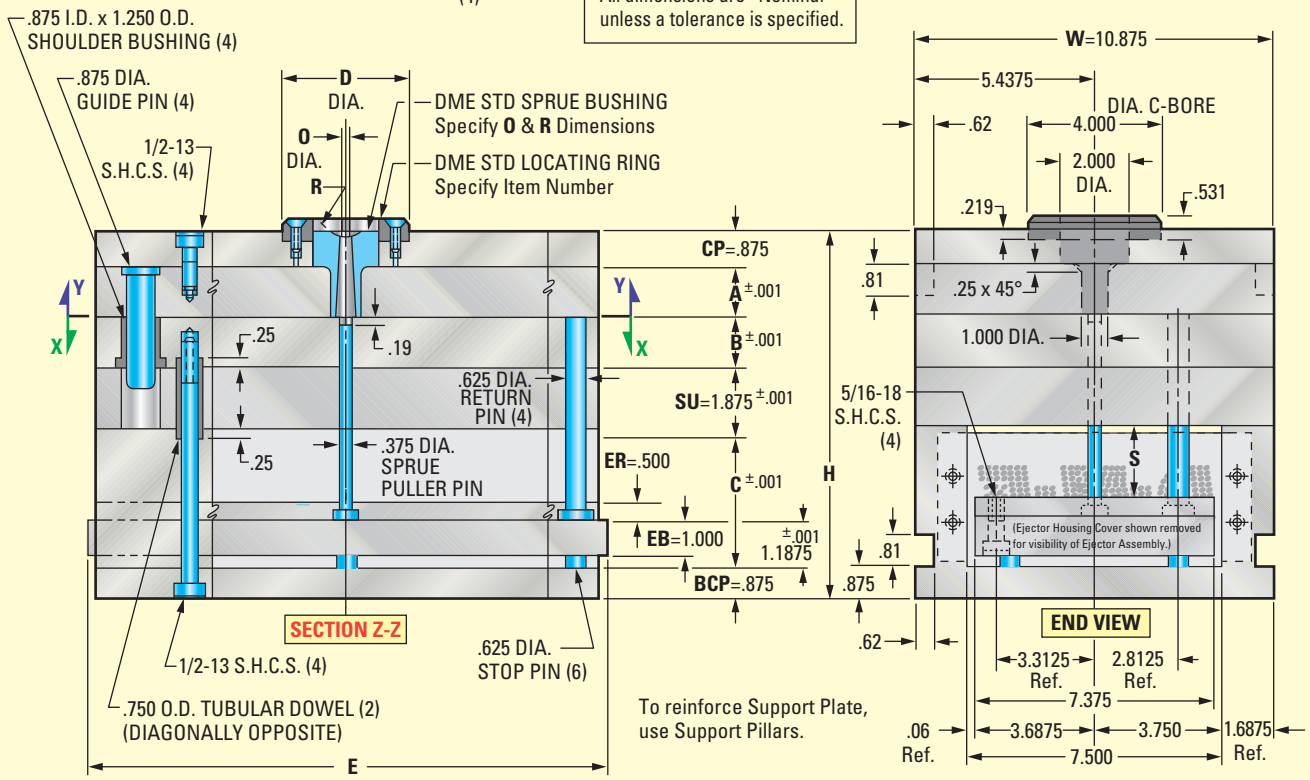

To reinforce Support Plate, use Support Pillars.

Mold Base Selections

A-Series Assembly

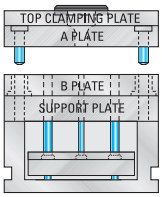

B-Series Assembly

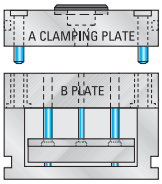

(For X-Series Stripper Plate, AX-Series and T-Series Mold Bases, see pages 173-198.)

Steel Configurations available in:

No. 1 Steel Assembly

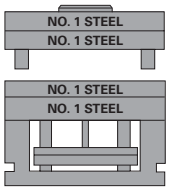

No. 2 Steel Assembly

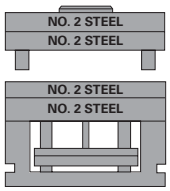

No. 3 Steel Assembly

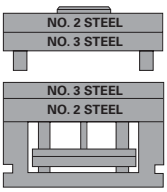

No. 7 Steel Assembly

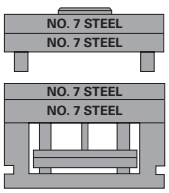

Other steel combinations also available. (Ejector Plates and Housings are No. 1 Steel, unless otherwise specified.) For additional Steel information, see page 42.

10⁷/₈ x 14" A-Series Mold Bases

A	B	C	H	ASSEMBLY ITEM NO.	NET WT.
.875 (7/8)	0.875	2.500	7.875	1114A-7-7	306
	1.375	3.000	8.875	1114A-7-13	334
	1.875	3.000	9.375	1114A-7-17	355
	2.375	3.500	10.375	1114A-7-23	384
	2.875	3.500	10.875	1114A-7-27	405
	3.375	4.000	11.875	1114A-7-33	434
	3.875	4.000	12.375	1114A-7-37	455
	4.875	4.500	13.875	1114A-7-47	505
	5.875	4.500	14.875	1114A-7-57	548

A	B	C	H	ASSEMBLY ITEM NO.	NET WT.
2.375 (2-3/8)	0.875	3.000	9.875	1114A-23-7	377
	1.375	3.000	10.375	1114A-23-13	399
	1.875	3.500	11.375	1114A-23-17	427
	2.375	3.500	11.875	1114A-23-23	448
	2.875	4.000	12.875	1114A-23-27	477
	3.375	4.000	13.375	1114A-23-33	498
	3.875	4.000	13.875	1114A-23-37	520
	4.875	4.500	15.375	1114A-23-47	570
	5.875	4.500	16.375	1114A-23-57	613

A	B	C	H	ASSEMBLY ITEM NO.	NET WT.
3.875 (3-7/8)	0.875	3.000	11.375	1114A-37-7	442
	1.375	3.500	12.375	1114A-37-13	470
	1.875	3.500	12.875	1114A-37-17	492
	2.375	4.000	13.875	1114A-37-23	520
	2.875	4.000	14.375	1114A-37-27	541
	3.375	4.000	14.875	1114A-37-33	563
	3.875	4.500	15.875	1114A-37-37	591
	4.875	4.500	16.875	1114A-37-47	634
	5.875	4.500	17.875	1114A-37-57	678

A	B	C	H	ASSEMBLY ITEM NO.	NET WT.
1.375 (1-3/8)	0.875	2.500	8.375	1114A-13-7	327
	1.375	3.000	9.375	1114A-13-13	355
	1.875	3.000	9.875	1114A-13-17	377
	2.375	3.500	10.875	1114A-13-23	405
	2.875	3.500	11.375	1114A-13-27	427
	3.375	4.000	12.375	1114A-13-33	455
	3.875	4.000	12.875	1114A-13-37	477
	4.875	4.500	14.375	1114A-13-47	527
	5.875	4.500	15.375	1114A-13-57	570

A	B	C	H	ASSEMBLY ITEM NO.	NET WT.
2.875 (2-7/8)	0.875	3.000	10.375	1114A-27-7	399
	1.375	3.000	10.875	1114A-27-13	420
	1.875	3.500	11.875	1114A-27-17	448
	2.375	3.500	12.375	1114A-27-23	470
	2.875	4.000	13.375	1114A-27-27	498
	3.375	4.000	13.875	1114A-27-33	520
	3.875	4.000	14.375	1114A-27-37	541
	4.875	4.500	15.875	1114A-27-47	591
	5.875	4.500	16.875	1114A-27-57	634

A	B	C	H	ASSEMBLY ITEM NO.	NET WT.
4.875 (4-7/8)	0.875	3.500	12.875	1114A-47-7	492
	1.375	3.500	13.375	1114A-47-13	513
	1.875	4.000	14.375	1114A-47-17	541
	2.375	4.000	14.875	1114A-47-23	563
	2.875	4.000	15.375	1114A-47-27	585
	3.375	4.500	16.375	1114A-47-33	613
	3.875	4.500	16.875	1114A-47-37	634
	4.875	4.500	17.875	1114A-47-47	678
	5.875	4.500	18.875	1114A-47-57	721

A	B	C	H	ASSEMBLY ITEM NO.	NET WT.
1.875 (1-7/8)	0.875	2.500	8.875	1114A-17-7	349
	1.375	3.000	9.875	1114A-17-13	377
	1.875	3.500	10.875	1114A-17-17	405
	2.375	3.500	11.375	1114A-17-23	427
	2.875	4.000	12.375	1114A-17-27	455
	3.375	4.000	12.875	1114A-17-33	477
	3.875	4.000	13.375	1114A-17-37	498
	4.875	4.500	14.875	1114A-17-47	548
	5.875	4.500	15.875	1114A-17-57	591

A	B	C	H	ASSEMBLY ITEM NO.	NET WT.
3.375 (3-3/8)	0.875	3.000	10.875	1114A-33-7	420
	1.375	3.500	11.875	1114A-33-13	448
	1.875	3.500	12.375	1114A-33-17	470
	2.375	4.000	13.375	1114A-33-23	498
	2.875	4.000	13.875	1114A-33-27	520
	3.375	4.000	14.375	1114A-33-33	542
	3.875	4.500	15.375	1114A-33-37	570
	4.875	4.500	16.375	1114A-33-47	613
	5.875	4.500	17.375	1114A-33-57	656

A	B	C	H	ASSEMBLY ITEM NO.	NET WT.
5.875 (5-7/8)	0.875	3.500	13.875	1114A-57-7	535
	1.375	3.500	14.375	1114A-57-13	556
	1.875	4.000	15.375	1114A-57-17	585
	2.375	4.000	15.875	1114A-57-23	606
	2.875	4.000	16.375	1114A-57-27	628
	3.375	4.500	17.375	1114A-57-33	656
	3.875	4.500	17.875	1114A-57-37	678
	4.875	4.500	18.875	1114A-57-47	721
	5.875	4.500	19.875	1114A-57-57	764

Other plate thickness, riser height and ejector bar length options available

CP TOP CLAMP PLATE THICKNESS	SU SUPPORT PLATE THICKNESS	BCP BOTTOM CLAMP PLATE THICKNESS	PLATE THICKNESS NO.
0.875	0.875	0.875	7
1.375	1.375	1.375	13
1.875	1.875	1.875	17
2.375	2.375	2.375	23
2.875	2.875	2.875	27
3.375	3.375	3.375	33
3.875	3.875	3.875	37
4.875	4.875	4.875	47
5.875	5.875	5.875	57

See Items 7 & 8 below.

C RISER		
C RISER HEIGHT	RISER HEIGHT NO.	S MAX. STROKE OF EJECTOR BAR
2.500	25	0.813
3.000	30	1.313
3.500	35	1.813
4.000	40	2.313
4.500	45	2.813
5.000	50	3.313
5.500	55	3.813
6.000	60	4.313

See Item 8 below.

EB EJECTOR BAR	
E LENGTH NOM.	EJECTOR BAR LENGTH NO.
13.97	14
17.97	18
23.47	23
29.47	29

See Item 6 below.

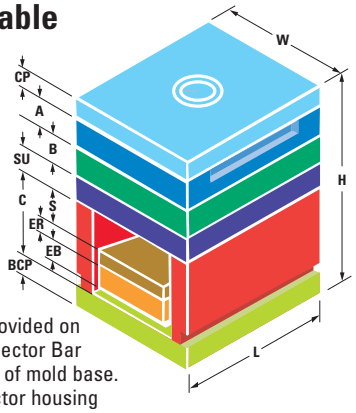

Ejector Housing Covers provided on both ends of mold when Ejector Bar Length **E** is nominal length of mold base. Customer to fabricate ejector housing covers for extended ejector bars.

WHEN ORDERING, PLEASE SPECIFY:

1. Quantity
2. Assembly Item Number (For "B" Series, replace "A" with "B")
3. Steel: #1, #2, #3 or #7 (for other steels, please specify)
4. Locating ring item number:
   Item No. 6501 (**D** = 3.990 Diameter of Locating Ring) standard
   Item No. 6504 (**D** = 3.990 Diameter of Locating Ring) clamp type
   (For other rings see DME Mold Components Catalog)
5. Type of sprue bushing, series letters: (i.e., B, etc.)
   O = Small dia. of sprue bushing orifice: .156, .218, .281 or .343
   R = Spherical radius of sprue bushing: .500 or .750
   (For sprue bushings see DME Mold Components Catalog)
6. Ejector Bar Length **E** (Ejector Bar Length at nominal length of mold base is highlighted in yellow. All other lengths provide an extended ejector bar)
7. Other **CP** Top Clamp Plate or **SU** Support Plate thicknesses as needed (Recommended thicknesses are highlighted in yellow)
8. Other **C** Riser heights as needed. Also, other **BCP** Bottom Clamp Plate thicknesses as needed. Riser height **C** and **BCP** Bottom Clamp Plate thicknesses which are highlighted in yellow are available in #1 Steel in a one-piece Welded Housing. Also, all Riser heights **C** and all **BCP** Bottom Clamp Plate thicknesses are available in #1 or #7 Steel in a Three-Piece Housing (for other steels, please specify)
9. Other features as needed (i.e. Guided Ejection, Lifting Holes, Pry Bar Slots, as well as Leader Pin, Return Pin, or Assembly Screw Relocations, etc.)
10. Method of shipment
    (For inch decimal to fractional conversion table, see page 278.)

10⅞ x 18" A-Series Mold Bases

See opposite page for general dimensions, ejector stroke data, locating rings, sprue bushings, ejector bar lengths and other ordering information.

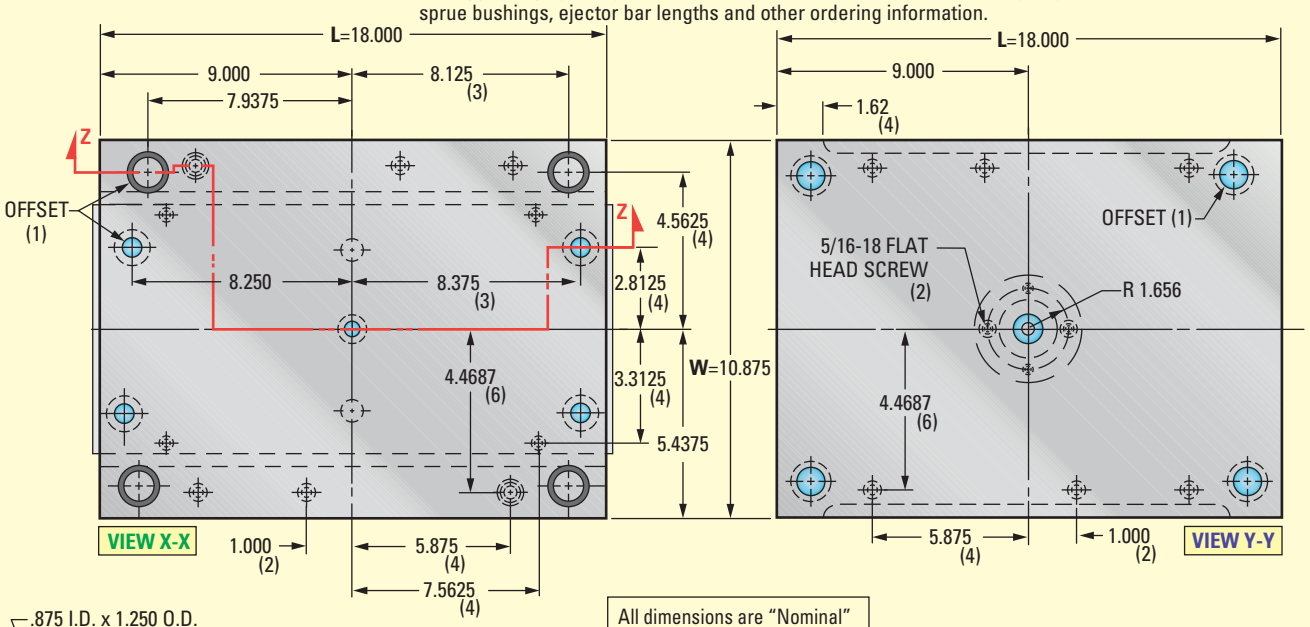

All dimensions are "Nominal" unless a tolerance is specified.

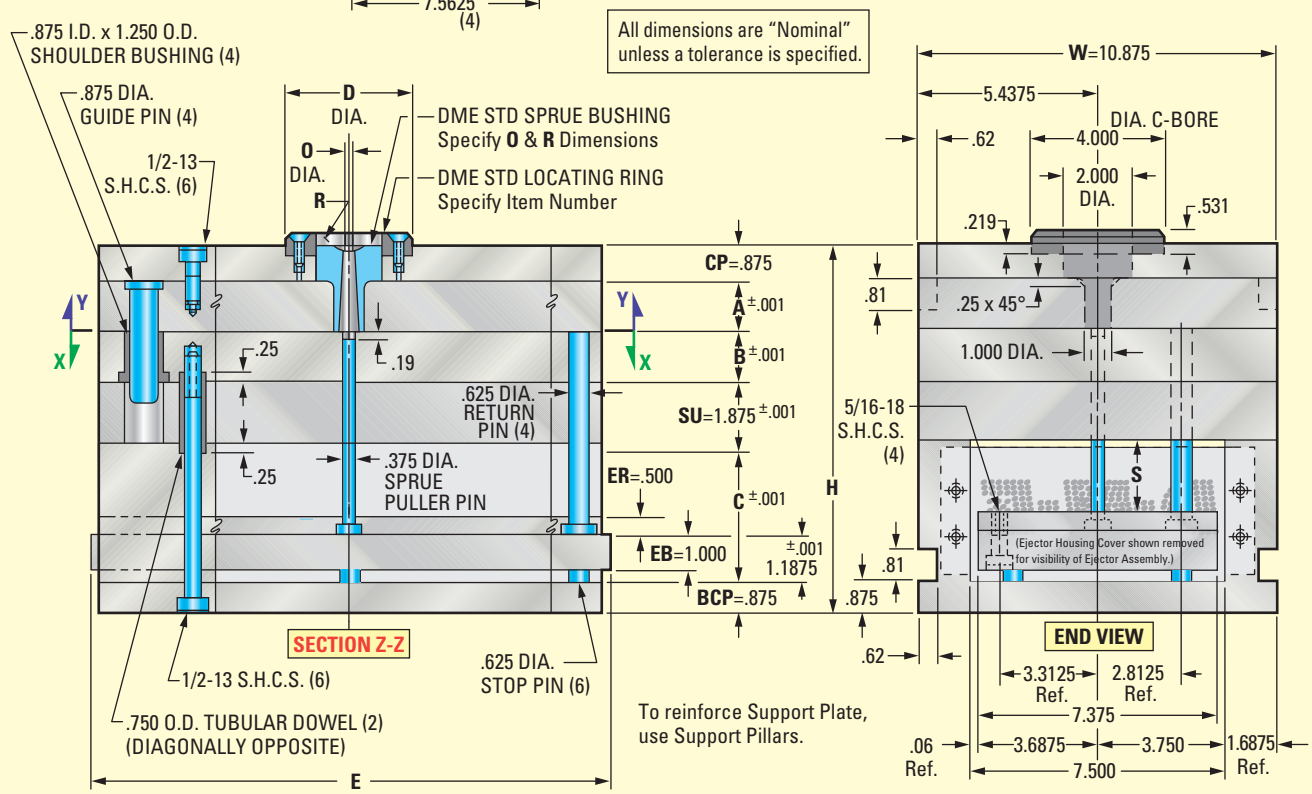

Mold Base Selections

A-Series Assembly

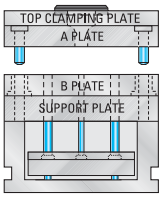

B-Series Assembly

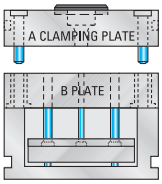

(For X-Series Stripper Plate, AX-Series and T-Series Mold Bases, see pages 173-198.)

Steel Configurations available in:

No. 1 Steel Assembly

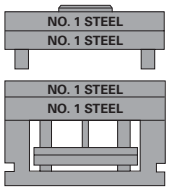

No. 2 Steel Assembly

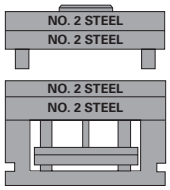

No. 3 Steel Assembly

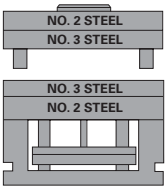

No. 7 Steel Assembly

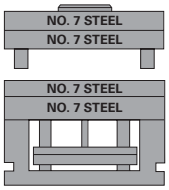

Other steel combinations also available. (Ejector Plates and Housings are No. 1 Steel, unless otherwise specified.) For additional Steel information, see page 42.

10⁷/₈ x 18" A-Series Mold Bases

A	B	C	H	ASSEMBLY ITEM NO.	NET WT.
.875 (7/8)	0.875	2.500	7.875	1118A-7-7	393
	1.375	3.000	8.875	1118A-7-13	429
	1.875	3.000	9.375	1118A-7-17	457
	2.375	3.500	10.375	1118A-7-23	493
	2.875	3.500	10.875	1118A-7-27	521
	3.375	4.000	11.875	1118A-7-33	557
	3.875	4.000	12.375	1118A-7-37	585
	4.875	4.500	13.875	1118A-7-47	649
	5.875	4.500	14.875	1118A-7-57	705

A	B	C	H	ASSEMBLY ITEM NO.	NET WT.
2.375 (2-3/8)	0.875	3.000	9.875	1118A-23-7	485
	1.375	3.000	10.375	1118A-23-13	513
	1.875	3.500	11.375	1118A-23-17	549
	2.375	3.500	11.875	1118A-23-23	576
	2.875	4.000	12.875	1118A-23-27	613
	3.375	4.000	13.375	1118A-23-33	641
	3.875	4.000	13.875	1118A-23-37	668
	4.875	4.500	15.375	1118A-23-47	732
	5.875	4.500	16.375	1118A-23-57	788

A	B	C	H	ASSEMBLY ITEM NO.	NET WT.
3.875 (3-7/8)	0.875	3.000	11.375	1118A-37-7	568
	1.375	3.500	12.375	1118A-37-13	604
	1.875	3.500	12.875	1118A-37-17	632
	2.375	4.000	13.875	1118A-37-23	668
	2.875	4.000	14.375	1118A-37-27	696
	3.375	4.000	14.875	1118A-37-33	724
	3.875	4.500	15.875	1118A-37-37	760
	4.875	4.500	16.875	1118A-37-47	816
	5.875	4.500	17.875	1118A-37-57	871

A	B	C	H	ASSEMBLY ITEM NO.	NET WT.
1.375 (1-3/8)	0.875	2.500	8.375	1118A-13-7	421
	1.375	3.000	9.375	1118A-13-13	457
	1.875	3.000	9.875	1118A-13-17	485
	2.375	3.500	10.875	1118A-13-23	521
	2.875	3.500	11.375	1118A-13-27	549
	3.375	4.000	12.375	1118A-13-33	585
	3.875	4.000	12.875	1118A-13-37	613
	4.875	4.500	14.375	1118A-13-47	677
	5.875	4.500	15.375	1118A-13-57	732

A	B	C	H	ASSEMBLY ITEM NO.	NET WT.
2.875 (2-7/8)	0.875	3.000	10.375	1118A-27-7	512
	1.375	3.000	10.875	1118A-27-13	540
	1.875	3.500	11.875	1118A-27-17	576
	2.375	3.500	12.375	1118A-27-23	604
	2.875	4.000	13.375	1118A-27-27	641
	3.375	4.000	13.875	1118A-27-33	668
	3.875	4.000	14.375	1118A-27-37	696
	4.875	4.500	15.875	1118A-27-47	760
	5.875	4.500	16.875	1118A-27-57	816

A	B	C	H	ASSEMBLY ITEM NO.	NET WT.
4.875 (4-7/8)	0.875	3.500	12.875	1118A-47-7	632
	1.375	3.500	13.375	1118A-47-13	660
	1.875	4.000	14.375	1118A-47-17	696
	2.375	4.000	14.875	1118A-47-23	724
	2.875	4.000	15.375	1118A-47-27	751
	3.375	4.500	16.375	1118A-47-33	788
	3.875	4.500	16.875	1118A-47-37	816
	4.875	4.500	17.875	1118A-47-47	871
	5.875	4.500	18.875	1118A-47-57	926

A	B	C	H	ASSEMBLY ITEM NO.	NET WT.
1.875 (1-7/8)	0.875	2.500	8.875	1118A-17-7	448
	1.375	3.000	9.875	1118A-17-13	485
	1.875	3.500	10.875	1118A-17-17	521
	2.375	3.500	11.375	1118A-17-23	549
	2.875	4.000	12.375	1118A-17-27	585
	3.375	4.000	12.875	1118A-17-33	613
	3.875	4.000	13.375	1118A-17-37	641
	4.875	4.500	14.875	1118A-17-47	705
	5.875	4.500	15.875	1118A-17-57	760

A	B	C	H	ASSEMBLY ITEM NO.	NET WT.
3.375 (3-3/8)	0.875	3.000	10.875	1118A-33-7	540
	1.375	3.500	11.875	1118A-33-13	576
	1.875	3.500	12.375	1118A-33-17	604
	2.375	4.000	13.375	1118A-33-23	641
	2.875	4.000	13.875	1118A-33-27	668
	3.375	4.000	14.375	1118A-33-33	696
	3.875	4.500	15.375	1118A-33-37	732
	4.875	4.500	16.375	1118A-33-47	788
	5.875	4.500	17.375	1118A-33-57	843

A	B	C	H	ASSEMBLY ITEM NO.	NET WT.
5.875 (5-7/8)	0.875	3.500	13.875	1118A-57-7	687
	1.375	3.500	14.375	1118A-57-13	715
	1.875	4.000	15.375	1118A-57-17	751
	2.375	4.000	15.875	1118A-57-23	779
	2.875	4.000	16.375	1118A-57-27	807
	3.375	4.500	17.375	1118A-57-33	843
	3.875	4.500	17.875	1118A-57-37	871
	4.875	4.500	18.875	1118A-57-47	926
	5.875	4.500	19.875	1118A-57-57	982

Other plate thickness, riser height and ejector bar length options available

CP TOP CLAMP PLATE THICKNESS	SU SUPPORT PLATE THICKNESS	BCP BOTTOM CLAMP PLATE THICKNESS	PLATE THICKNESS NO.
0.875	0.875	0.875	7
1.375	1.375	1.375	13
1.875	1.875	1.875	17
2.375	2.375	2.375	23
2.875	2.875	2.875	27
3.375	3.375	3.375	33
3.875	3.875	3.875	37
4.875	4.875	4.875	47
5.875	5.875	5.875	57

See Items 7 & 8 below.

C RISER		
C RISER HEIGHT	RISER HEIGHT NO.	S MAX. STROKE OF EJECTOR BAR
2.500	25	0.813
3.000	30	1.313
3.500	35	1.813
4.000	40	2.313
4.500	45	2.813
5.000	50	3.313
5.500	55	3.813
6.000	60	4.313

See Item 8 below.

EB EJECTOR BAR	
E LENGTH NOM.	EJECTOR BAR LENGTH NO.
17.97	18
23.47	23
29.47	29

See Item 6 below.

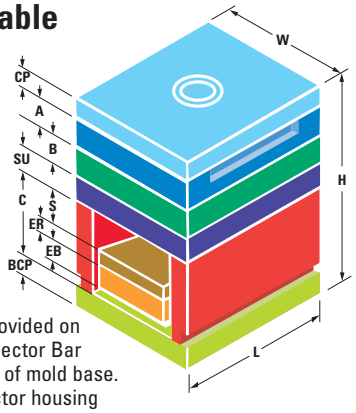

Ejector Housing Covers provided on both ends of mold when Ejector Bar Length **E** is nominal length of mold base. Customer to fabricate ejector housing covers for extended ejector bars.

WHEN ORDERING, PLEASE SPECIFY:

1. Quantity
2. Assembly Item Number (For "B" Series, replace "A" with "B")
3. Steel: #1, #2, #3 or #7 (for other steels, please specify)
4. Locating ring item number:
   Item No. 6501 (**D** = 3.990 Diameter of Locating Ring) standard
   Item No. 6504 (**D** = 3.990 Diameter of Locating Ring) clamp type
   (For other rings see DME Mold Components Catalog)
5. Type of sprue bushing, series letters: (i.e., B, etc.)
   O = Small dia. of sprue bushing orifice: .156, .218, .281 or .343
   R = Spherical radius of sprue bushing: .500 or .750
   (For sprue bushings see DME Mold Components Catalog)
6. Ejector Bar Length **E** (Ejector Bar Length at nominal length of mold base is highlighted in yellow. All other lengths provide an extended ejector bar)
7. Other **CP** Top Clamp Plate or **SU** Support Plate thicknesses as needed (Recommended thicknesses are highlighted in yellow)
8. Other **C** Riser heights as needed. Also, other **BCP** Bottom Clamp Plate thicknesses as needed. Riser height **C** and **BCP** Bottom Clamp Plate thicknesses which are highlighted in yellow are available in #1 Steel in a one-piece Welded Housing. Also, all Riser heights **C** and all **BCP** Bottom Clamp Plate thicknesses are available in #1 or #7 Steel in a Three-Piece Housing (for other steels, please specify)
9. Other features as needed (i.e. Guided Ejection, Lifting Holes, Pry Bar Slots, as well as Leader Pin, Return Pin, or Assembly Screw Relocations, etc.)
10. Method of shipment
    (For inch decimal to fractional conversion table, see page 278.)

10⅞ x 23½ A-Series Mold Bases

See opposite page for general dimensions, ejector stroke data, locating rings, sprue bushings, ejector bar lengths and other ordering information.

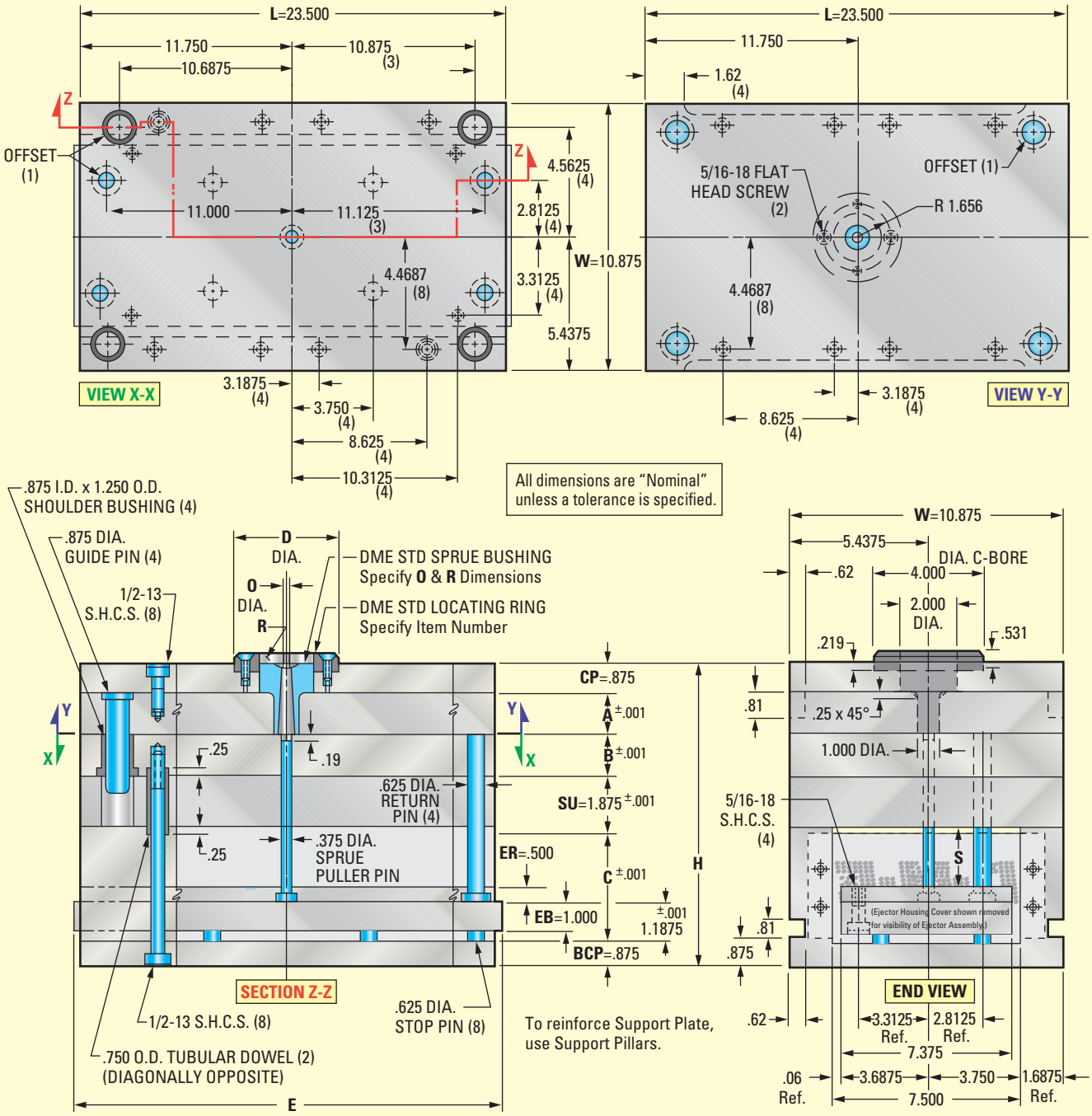

Mold Base Selections

A-Series Assembly

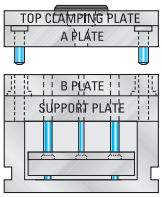

B-Series Assembly

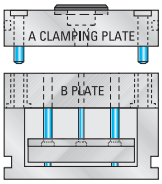

(For X-Series Stripper Plate, AX-Series and T-Series Mold Bases, see pages 173-198.)

Steel Configurations available in:

No. 1 Steel Assembly

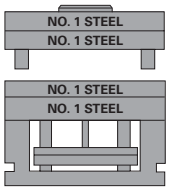

No. 2 Steel Assembly

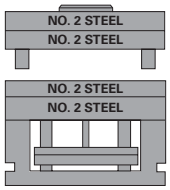

No. 3 Steel Assembly

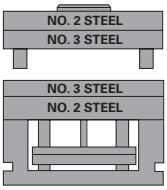

No. 7 Steel Assembly

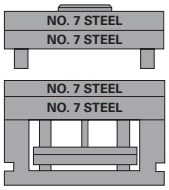

Other steel combinations also available. (Ejector Plates and Housings are No. 1 Steel, unless otherwise specified.) For additional Steel information, see page 42.

10⅞ x 23½ A-Series Mold Bases

A	B	C	H	ASSEMBLY ITEM NO.	NET WT.
1.375 (1-3/8)	1.375	3.000	9.375	1123A-13-13	596
	1.875	3.000	9.875	1123A-13-17	633
	2.375	3.500	10.875	1123A-13-23	680
	2.875	3.500	11.375	1123A-13-27	716
	3.375	4.000	12.375	1123A-13-33	764
	3.875	4.000	12.875	1123A-13-37	800
	4.875	4.500	14.375	1123A-13-47	883
	5.875	4.500	15.375	1123A-13-57	956

A	B	C	H	ASSEMBLY ITEM NO.	NET WT.
2.875 (2-7/8)	1.375	3.000	10.875	1123A-27-13	705
	1.875	3.500	11.875	1123A-27-17	752
	2.375	3.500	12.375	1123A-27-23	789
	2.875	4.000	13.375	1123A-27-27	836
	3.375	4.000	13.875	1123A-27-33	872
	3.875	4.000	14.375	1123A-27-37	908
	4.875	4.500	15.875	1123A-27-47	992
	5.875	4.500	16.875	1123A-27-57	1063

A	B	C	H	ASSEMBLY ITEM NO.	NET WT.
4.875 (4-7/8)	1.375	3.500	13.375	1123A-47-13	861
	1.875	4.000	14.375	1123A-47-17	908
	2.375	4.000	14.875	1123A-47-23	945
	2.875	4.000	15.375	1123A-47-27	981
	3.375	4.500	16.375	1123A-47-33	1028
	3.875	4.500	16.875	1123A-47-37	1064
	4.875	4.500	17.875	1123A-47-47	1137
	5.875	4.500	18.875	1123A-47-57	1209

A	B	C	H	ASSEMBLY ITEM NO.	NET WT.
1.875 (1-7/8)	1.375	3.000	9.875	1123A-17-13	633
	1.875	3.500	10.875	1123A-17-17	680
	2.375	3.500	11.375	1123A-17-23	716
	2.875	4.000	12.375	1123A-17-27	764
	3.375	4.000	12.875	1123A-17-33	800
	3.875	4.000	13.375	1123A-17-37	836
	4.875	4.500	14.875	1123A-17-47	920
	5.875	4.500	15.875	1123A-17-57	992

A	B	C	H	ASSEMBLY ITEM NO.	NET WT.
3.375 (3-3/8)	1.375	3.500	11.875	1123A-33-13	752
	1.875	3.500	12.375	1123A-33-17	789
	2.375	4.000	13.375	1123A-33-23	836
	2.875	4.000	13.875	1123A-33-27	872
	3.375	4.000	14.375	1123A-33-33	908
	3.875	4.500	15.375	1123A-33-37	956
	4.875	4.500	16.375	1123A-33-47	1028
	5.875	4.500	17.375	1123A-33-57	1101

A	B	C	H	ASSEMBLY ITEM NO.	NET WT.
5.875 (5-7/8)	1.375	3.500	14.375	1123A-57-13	933
	1.875	4.000	15.375	1123A-57-17	981
	2.375	4.000	15.875	1123A-57-23	1017
	2.875	4.000	16.375	1123A-57-27	1053
	3.375	4.500	17.375	1123A-57-33	1101
	3.875	4.500	17.875	1123A-57-37	1137
	4.875	4.500	18.875	1123A-57-47	1209
	5.875	4.500	19.875	1123A-57-57	1282

A	B	C	H	ASSEMBLY ITEM NO.	NET WT.
2.375 (2-3/8)	1.375	3.000	10.375	1123A-23-13	669
	1.875	3.500	11.375	1123A-23-17	716
	2.375	3.500	11.875	1123A-23-23	752
	2.875	4.000	12.875	1123A-23-27	800
	3.375	4.000	13.375	1123A-23-33	836
	3.875	4.000	13.875	1123A-23-37	872
	4.875	4.500	15.375	1123A-23-47	956
	5.875	4.500	16.375	1123A-23-57	1028

A	B	C	H	ASSEMBLY ITEM NO.	NET WT.
3.875 (3-7/8)	1.375	3.500	12.375	1123A-37-13	789
	1.875	3.500	12.875	1123A-37-17	825
	2.375	4.000	13.875	1123A-37-23	872
	2.875	4.000	14.375	1123A-37-27	908
	3.375	4.000	14.875	1123A-37-33	945
	3.875	4.500	15.875	1123A-37-37	992
	4.875	4.500	16.875	1123A-37-47	1064
	5.875	4.500	17.875	1123A-37-57	1137

Other plate thickness, riser height and ejector bar length options available

CP TOP CLAMP PLATE THICKNESS	SU SUPPORT PLATE THICKNESS	BCP BOTTOM CLAMP PLATE THICKNESS	PLATE THICKNESS NO.
0.875	0.875	0.875	7
1.375	1.375	1.375	13
1.875	1.875	1.875	17
2.375	2.375	2.375	23
2.875	2.875	2.875	27
3.375	3.375	3.375	33
3.875	3.875	3.875	37
4.875	4.875	4.875	47
5.875	5.875	5.875	57

See Items 7 & 8 below.

C RISER		
C RISER HEIGHT	RISER HEIGHT NO.	S MAX. STROKE OF EJECTOR BAR
3.000	30	1.313
3.500	35	1.813
4.000	40	2.313
4.500	45	2.813
5.000	50	3.313
5.500	55	3.813
6.000	60	4.313

See Item 8 below.

EB EJECTOR BAR	
E LENGTH NOM.	EJECTOR BAR LENGTH NO.
23.47	23
29.47	29

See Item 6 below.

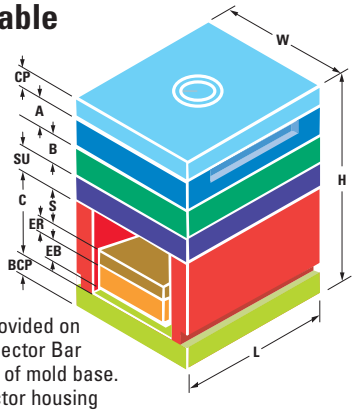

Ejector Housing Covers provided on both ends of mold when Ejector Bar Length **E** is nominal length of mold base. Customer to fabricate ejector housing covers for extended ejector bars.

WHEN ORDERING, PLEASE SPECIFY:

1. Quantity
2. Assembly Item Number (For "B" Series, replace "A" with "B")
3. Steel: #1, #2, #3 or #7 (for other steels, please specify)
4. Locating ring item number:
   Item No. 6501 (**D** = 3.990 Diameter of Locating Ring) standard
   Item No. 6504 (**D** = 3.990 Diameter of Locating Ring) clamp type
   (For other rings see DME Mold Components Catalog)
5. Type of sprue bushing, series letters: (i.e., B, etc.)
   O = Small dia. of sprue bushing orifice: .156, .218, .281 or .343
   R = Spherical radius of sprue bushing: .500 or .750
   (For sprue bushings see DME Mold Components Catalog)
6. Ejector Bar Length **E** (Ejector Bar Length at nominal length of mold base is highlighted in yellow. All other lengths provide an extended ejector bar)
7. Other **CP** Top Clamp Plate or **SU** Support Plate thicknesses as needed (Recommended thicknesses are highlighted in yellow)
8. Other **C** Riser heights as needed. Also, other **BCP** Bottom Clamp Plate thicknesses as needed. Riser height **C** and **BCP** Bottom Clamp Plate thicknesses which are highlighted in yellow are available in #1 Steel in a one-piece Welded Housing. Also, all Riser heights **C** and all **BCP** Bottom Clamp Plate thicknesses are available in #1 or #7 Steel in a Three-Piece Housing (for other steels, please specify)
9. Other features as needed (i.e. Guided Ejection, Lifting Holes, Pry Bar Slots, as well as Leader Pin, Return Pin, or Assembly Screw Relocations, etc.)
10. Method of shipment
    (For inch decimal to fractional conversion table, see page 278.)

DME A-Series Mold Bases

OVER 75 TRILLION POSSIBLE MOLD BASE CONFIGURATIONS

Table of Contents

88A....52-53
812A....54-55
108A....56-57
1012A....58-59
1016A....60-61
1020A....62-63
1112A....64-65
1114A....66-67
1118A....68-69
1123A....70-71
1212A....72-73
1215A....74-75
1220A....76-77
1223A....78-79
1315A....80-81
1318A....82-83
1321A....84-85
1323A....86-87
1326A....88-89
1329A....90-91
1518A....92-93
1524A....94-95
1529A....96-97
1616A....98-99
1620A....100-101
1623A....102-103
1626A....104-105
1629A....106-107
1635A....108-109
1724A....110-111
1729A....112-113
1818A....114-115
1820A....116-117
1823A....118-119
1826A....120-121
1829A....122-123
1835A....124-125
1924A....126-127
1929A....128-129
1935A....130-131
2424A....132-133
2429A....134-135
2435A....136-137
B-Series Mold Bases....138

11⁷⁄₈ x 12" A-Series Mold Bases

See opposite page for general dimensions, ejector stroke data, locating rings, sprue bushings, ejector bar lengths and other ordering information.

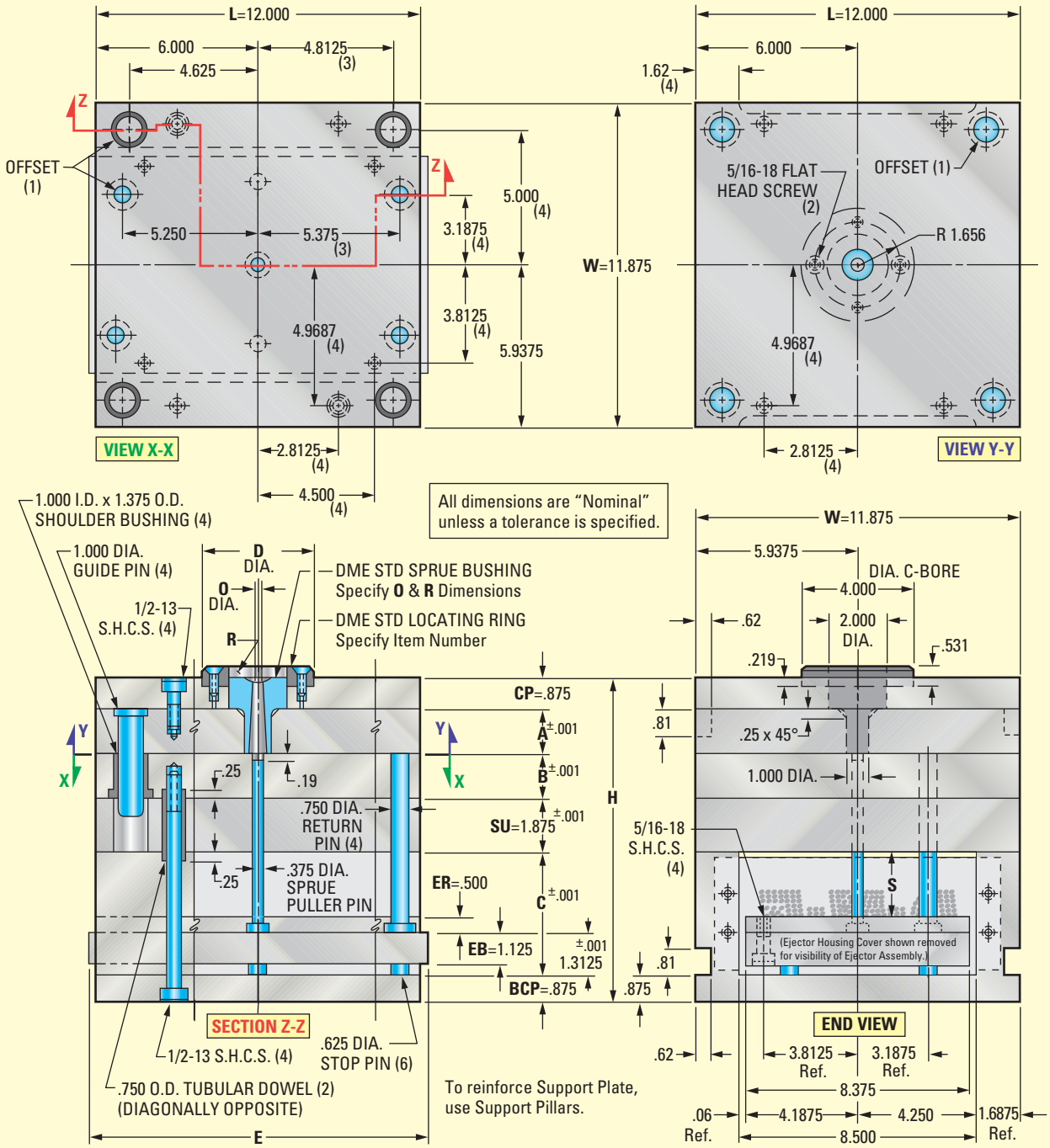

Mold Base Selections

A-Series Assembly

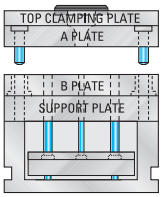

B-Series Assembly

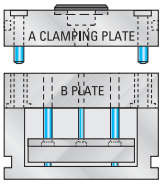

(For X-Series Stripper Plate, AX-Series and T-Series Mold Bases, see pages 173-198.)

Steel Configurations available in:

No. 1 Steel Assembly

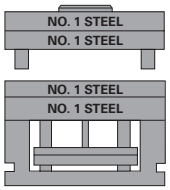

No. 2 Steel Assembly

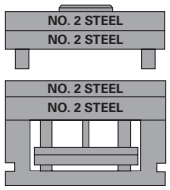

No. 3 Steel Assembly

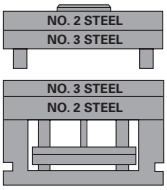

No. 7 Steel Assembly

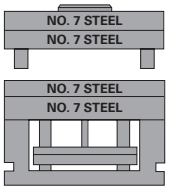

Other steel combinations also available. (Ejector Plates and Housings are No. 1 Steel, unless otherwise specified.) For additional Steel information, see page 42.

11⁷⁄₈ x 12" A-Series Mold Bases

A	B	C	H	ASSEMBLY ITEM NO.	NET WT.
.875 (7/8)	0.875	3.000	8.375	1212A-7-7	295
	1.375	3.000	8.875	1212A-7-13	315
	1.875	3.000	9.375	1212A-7-17	335
	2.375	3.500	10.375	1212A-7-23	361
	2.875	3.500	10.875	1212A-7-27	381
	3.375	4.000	11.875	1212A-7-33	407
	3.875	4.000	12.375	1212A-7-37	427
	4.875	4.500	13.875	1212A-7-47	473
	5.875	4.500	14.875	1212A-7-57	514

A	B	C	H	ASSEMBLY ITEM NO.	NET WT.
2.375 (2-3/8)	0.875	3.000	9.875	1212A-23-7	355
	1.375	3.500	10.875	1212A-23-13	381
	1.875	3.500	11.375	1212A-23-17	401
	2.375	3.500	11.875	1212A-23-23	422
	2.875	4.000	12.875	1212A-23-27	448
	3.375	4.000	13.375	1212A-23-33	468
	3.875	4.000	13.875	1212A-23-37	488
	4.875	4.500	15.375	1212A-23-47	534
	5.875	4.500	16.375	1212A-23-57	574

A	B	C	H	ASSEMBLY ITEM NO.	NET WT.
3.875 (3-7/8)	0.875	3.500	11.875	1212A-37-7	422
	1.375	3.500	12.375	1212A-37-13	442
	1.875	4.000	13.375	1212A-37-17	468
	2.375	4.500	14.375	1212A-37-23	494
	2.875	4.500	14.875	1212A-37-27	514
	3.375	4.500	15.375	1212A-37-33	534
	3.875	4.500	15.875	1212A-37-37	554
	4.875	4.500	16.875	1212A-37-47	595
	5.875	4.500	17.875	1212A-37-57	635

A	B	C	H	ASSEMBLY ITEM NO.	NET WT.
1.375 (1-3/8)	0.875	3.000	8.875	1212A-13-7	315
	1.375	3.000	9.375	1212A-13-13	335
	1.875	3.000	9.875	1212A-13-17	355
	2.375	3.500	10.875	1212A-13-23	381
	2.875	3.500	11.375	1212A-13-27	401
	3.375	4.000	12.375	1212A-13-33	427
	3.875	4.000	12.875	1212A-13-37	448
	4.875	4.500	14.375	1212A-13-47	494
	5.875	4.500	15.375	1212A-13-57	534

A	B	C	H	ASSEMBLY ITEM NO.	NET WT.
2.875 (2-7/8)	0.875	3.000	10.375	1212A-27-7	375
	1.375	3.500	11.375	1212A-27-13	401
	1.875	3.500	11.875	1212A-27-17	422
	2.375	3.500	12.375	1212A-27-23	442
	2.875	4.000	13.375	1212A-27-27	468
	3.375	4.000	13.875	1212A-27-33	488
	3.875	4.000	14.375	1212A-27-37	508
	4.875	4.500	15.875	1212A-27-47	554
	5.875	4.500	16.875	1212A-27-57	595

A	B	C	H	ASSEMBLY ITEM NO.	NET WT.
4.875 (4-7/8)	0.875	3.500	12.875	1212A-47-7	462
	1.375	3.500	13.375	1212A-47-13	482
	1.875	4.000	14.375	1212A-47-17	508
	2.375	4.500	15.375	1212A-47-23	534
	2.875	4.500	15.875	1212A-47-27	554
	3.375	4.500	16.375	1212A-47-33	574
	3.875	4.500	16.875	1212A-47-37	595
	4.875	4.500	17.875	1212A-47-47	635
	5.875	4.500	18.875	1212A-47-57	675

A	B	C	H	ASSEMBLY ITEM NO.	NET WT.
1.875 (1-7/8)	0.875	3.000	9.375	1212A-17-7	335
	1.375	3.000	9.875	1212A-17-13	355
	1.875	3.000	10.375	1212A-17-17	375
	2.375	3.500	11.375	1212A-17-23	401
	2.875	3.500	11.875	1212A-17-27	422
	3.375	4.000	12.875	1212A-17-33	448
	3.875	4.000	13.375	1212A-17-37	468
	4.875	4.500	14.875	1212A-17-47	514
	5.875	4.500	15.875	1212A-17-57	554

A	B	C	H	ASSEMBLY ITEM NO.	NET WT.
3.375 (3-3/8)	0.875	3.500	11.375	1212A-33-7	401
	1.375	3.500	11.875	1212A-33-13	422
	1.875	3.500	12.375	1212A-33-17	442
	2.375	4.000	13.375	1212A-33-23	468
	2.875	4.000	13.875	1212A-33-27	488
	3.375	4.500	14.875	1212A-33-33	514
	3.875	4.500	15.375	1212A-33-37	534
	4.875	4.500	16.375	1212A-33-47	574
	5.875	4.500	17.375	1212A-33-57	615

A	B	C	H	ASSEMBLY ITEM NO.	NET WT.
5.875 (5-7/8)	0.875	3.500	13.875	1212A-57-7	502
	1.375	4.000	14.875	1212A-57-13	528
	1.875	4.500	15.875	1212A-57-17	554
	2.375	4.500	16.375	1212A-57-23	574
	2.875	4.500	16.875	1212A-57-27	595
	3.375	4.500	17.375	1212A-57-33	615
	3.875	4.500	17.875	1212A-57-37	635
	4.875	4.500	18.875	1212A-57-47	675
	5.875	4.500	19.875	1212A-57-57	716

Other plate thickness, riser height and ejector bar length options available

CP TOP CLAMP PLATE THICKNESS	SU SUPPORT PLATE THICKNESS	BCP BOTTOM CLAMP PLATE THICKNESS	PLATE THICKNESS NO.
0.875	0.875	0.875	7
1.375	1.375	1.375	13
1.875	1.875	1.875	17
2.375	2.375	2.375	23
2.875	2.875	2.875	27
3.375	3.375	3.375	33
3.875	3.875	3.875	37
4.875	4.875	4.875	47
5.875	5.875	5.875	57

See Items 7 & 8 below.

C RISER		
C RISER HEIGHT	RISER HEIGHT NO.	S MAX. STROKE OF EJECTOR BAR
3.000	30	1.188
3.500	35	1.688
4.000	40	2.188
4.500	45	2.688
5.000	50	3.188
5.500	55	3.688
6.000	60	4.188

See Item 8 below.

EB EJECTOR BAR	
E LENGTH NOM.	EJECTOR BAR LENGTH NO.
11.97	12
14.97	15
19.97	20
23.47	23
29.47	29

See Item 6 below.

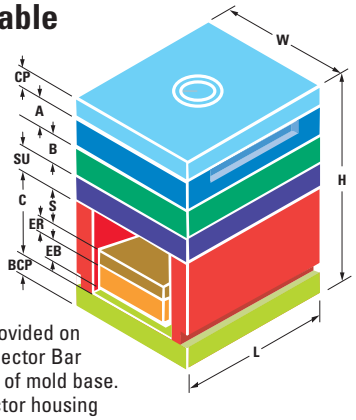

Ejector Housing Covers provided on both ends of mold when Ejector Bar Length **E** is nominal length of mold base. Customer to fabricate ejector housing covers for extended ejector bars.

WHEN ORDERING, PLEASE SPECIFY:

1. Quantity
2. Assembly Item Number (For "B" Series, replace "A" with "B")
3. Steel: #1, #2, #3 or #7 (for other steels, please specify)
4. Locating ring item number:
   Item No. 6501 (**D** = 3.990 Diameter of Locating Ring) standard
   Item No. 6504 (**D** = 3.990 Diameter of Locating Ring) clamp type
   (For other rings see DME Mold Components Catalog)
5. Type of sprue bushing, series letters: (i.e., B, etc.)
   O = Small dia. of sprue bushing orifice: .156, .218, .281 or .343
   R = Spherical radius of sprue bushing: .500 or .750
   (For sprue bushings see DME Mold Components Catalog)
6. Ejector Bar Length **E** (Ejector Bar Length at nominal length of mold base is highlighted in yellow. All other lengths provide an extended ejector bar)
7. Other **CP** Top Clamp Plate or **SU** Support Plate thicknesses as needed (Recommended thicknesses are highlighted in yellow)
8. Other **C** Riser heights as needed. Also, other **BCP** Bottom Clamp Plate thicknesses as needed. Riser height **C** and **BCP** Bottom Clamp Plate thicknesses which are highlighted in yellow are available in #1 Steel in a one-piece Welded Housing. Also, all Riser heights **C** and all **BCP** Bottom Clamp Plate thicknesses are available in #1 or #7 Steel in a Three-Piece Housing (for other steels, please specify)
9. Other features as needed (i.e. Guided Ejection, Lifting Holes, Pry Bar Slots, as well as Leader Pin, Return Pin, or Assembly Screw Relocations, etc.)
10. Method of shipment
    (For inch decimal to fractional conversion table, see page 278.)

11⁷⁄₈ x 15" A-Series Mold Bases

See opposite page for general dimensions, ejector stroke data, locating rings, sprue bushings, ejector bar lengths and other ordering information.

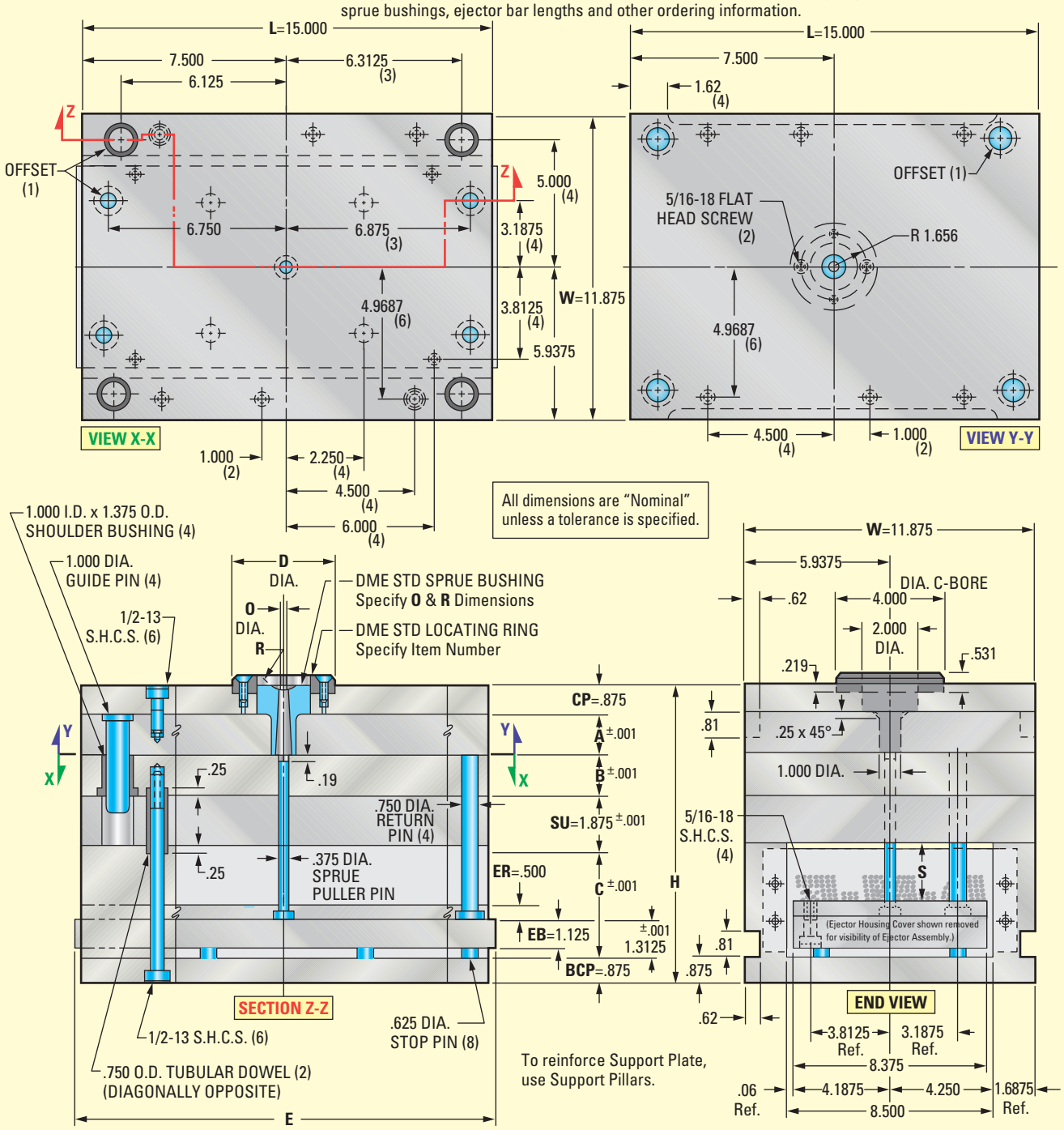

Mold Base Selections

A-Series Assembly

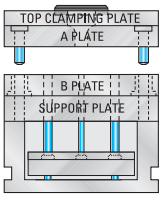

B-Series Assembly

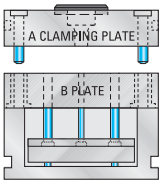

(For X-Series Stripper Plate, AX-Series and T-Series Mold Bases, see pages 173-198.)

Steel Configurations available in:

No. 1 Steel Assembly

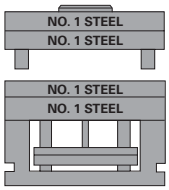

No. 2 Steel Assembly

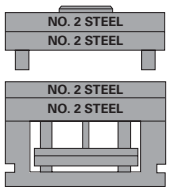

No. 3 Steel Assembly

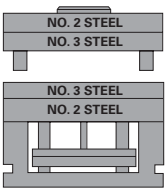

No. 7 Steel Assembly

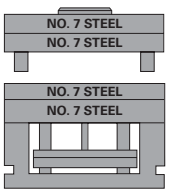

Other steel combinations also available. (Ejector Plates and Housings are No. 1 Steel, unless otherwise specified.) For additional Steel information, see page 42.

11⁷/₈ x 15" A-Series Mold Bases

A	B	C	H	ASSEMBLY ITEM NO.	NET WT.
.875 (7/8)	0.875	3.000	8.375	1215A-7-7	368
	1.375	3.000	8.875	1215A-7-13	393
	1.875	3.000	9.375	1215A-7-17	419
	2.375	3.500	10.375	1215A-7-23	451
	2.875	3.500	10.875	1215A-7-27	476
	3.375	4.000	11.875	1215A-7-33	509
	3.875	4.000	12.375	1215A-7-37	534
	4.875	4.500	13.875	1215A-7-47	592
	5.875	4.500	14.875	1215A-7-57	642

A	B	C	H	ASSEMBLY ITEM NO.	NET WT.
2.375 (2-3/8)	0.875	3.000	9.875	1215A-23-7	444
	1.375	3.500	10.875	1215A-23-13	476
	1.875	3.500	11.375	1215A-23-17	502
	2.375	3.500	11.875	1215A-23-23	527
	2.875	4.000	12.875	1215A-23-27	559
	3.375	4.000	13.375	1215A-23-33	584
	3.875	4.000	13.875	1215A-23-37	610
	4.875	4.500	15.375	1215A-23-47	667
	5.875	4.500	16.375	1215A-23-57	718

A	B	C	H	ASSEMBLY ITEM NO.	NET WT.
3.875 (3-7/8)	0.875	3.500	11.875	1215A-37-7	527
	1.375	3.500	12.375	1215A-37-13	552
	1.875	4.000	13.375	1215A-37-17	584
	2.375	4.500	14.375	1215A-37-23	617
	2.875	4.500	14.875	1215A-37-27	642
	3.375	4.500	15.375	1215A-37-33	667
	3.875	4.500	15.875	1215A-37-37	692
	4.875	4.500	16.875	1215A-37-47	743
	5.875	4.500	17.875	1215A-37-57	793

A	B	C	H	ASSEMBLY ITEM NO.	NET WT.
1.375 (1-3/8)	0.875	3.000	8.875	1215A-13-7	393
	1.375	3.000	9.375	1215A-13-13	419
	1.875	3.000	9.875	1215A-13-17	444
	2.375	3.500	10.875	1215A-13-23	476
	2.875	3.500	11.375	1215A-13-27	502
	3.375	4.000	12.375	1215A-13-33	534
	3.875	4.000	12.875	1215A-13-37	559
	4.875	4.500	14.375	1215A-13-47	617
	5.875	4.500	15.375	1215A-13-57	667

A	B	C	H	ASSEMBLY ITEM NO.	NET WT.
2.875 (2-7/8)	0.875	3.000	10.375	1215A-27-7	469
	1.375	3.500	11.375	1215A-27-13	502
	1.875	3.500	11.875	1215A-27-17	527
	2.375	3.500	12.375	1215A-27-23	552
	2.875	4.000	13.375	1215A-27-27	584
	3.375	4.000	13.875	1215A-27-33	610
	3.875	4.000	14.375	1215A-27-37	635
	4.875	4.500	15.875	1215A-27-47	692
	5.875	4.500	16.875	1215A-27-57	743

A	B	C	H	ASSEMBLY ITEM NO.	NET WT.
4.875 (4-7/8)	0.875	3.500	12.875	1215A-47-7	577
	1.375	3.500	13.375	1215A-47-13	602
	1.875	4.000	14.375	1215A-47-17	635
	2.375	4.500	15.375	1215A-47-23	667
	2.875	4.500	15.875	1215A-47-27	692
	3.375	4.500	16.375	1215A-47-33	718
	3.875	4.500	16.875	1215A-47-37	743
	4.875	4.500	17.875	1215A-47-47	793
	5.875	4.500	18.875	1215A-47-57	844

A	B	C	H	ASSEMBLY ITEM NO.	NET WT.
1.875 (1-7/8)	0.875	3.000	9.375	1215A-17-7	419
	1.375	3.000	9.875	1215A-17-13	444
	1.875	3.000	10.375	1215A-17-17	469
	2.375	3.500	11.375	1215A-17-23	502
	2.875	3.500	11.875	1215A-17-27	527
	3.375	4.000	12.875	1215A-17-33	559
	3.875	4.000	13.375	1215A-17-37	584
	4.875	4.500	14.875	1215A-17-47	642
	5.875	4.500	15.875	1215A-17-57	692

A	B	C	H	ASSEMBLY ITEM NO.	NET WT.
3.375 (3-3/8)	0.875	3.500	11.375	1215A-33-7	502
	1.375	3.500	11.875	1215A-33-13	527
	1.875	3.500	12.375	1215A-33-17	552
	2.375	4.000	13.375	1215A-33-23	584
	2.875	4.000	13.875	1215A-33-27	610
	3.375	4.500	14.875	1215A-33-33	642
	3.875	4.500	15.375	1215A-33-37	667
	4.875	4.500	16.375	1215A-33-47	718
	5.875	4.500	17.375	1215A-33-57	768

A	B	C	H	ASSEMBLY ITEM NO.	NET WT.
5.875 (5-7/8)	0.875	3.500	13.875	1215A-57-7	628
	1.375	4.000	14.875	1215A-57-13	660
	1.875	4.500	15.875	1215A-57-17	692
	2.375	4.500	16.375	1215A-57-23	718
	2.875	4.500	16.875	1215A-57-27	743
	3.375	4.500	17.375	1215A-57-33	768
	3.875	4.500	17.875	1215A-57-37	793
	4.875	4.500	18.875	1215A-57-47	844
	5.875	4.500	19.875	1215A-57-57	894

Other plate thickness, riser height and ejector bar length options available

CP TOP CLAMP PLATE THICKNESS	SU SUPPORT PLATE THICKNESS	BCP BOTTOM CLAMP PLATE THICKNESS	PLATE THICKNESS NO.
0.875	0.875	0.875	7
1.375	1.375	1.375	13
1.875	1.875	1.875	17
2.375	2.375	2.375	23
2.875	2.875	2.875	27
3.375	3.375	3.375	33
3.875	3.875	3.875	37
4.875	4.875	4.875	47
5.875	5.875	5.875	57

See Items 7 & 8 below.

C RISER		
C RISER HEIGHT	RISER HEIGHT NO.	S MAX. STROKE OF EJECTOR BAR
3.000	30	1.188
3.500	35	1.688
4.000	40	2.188
4.500	45	2.688
5.000	50	3.188
5.500	55	3.688
6.000	60	4.188

See Item 8 below.

EB EJECTOR BAR	
E LENGTH NOM.	EJECTOR BAR LENGTH NO.
14.97	15
19.97	20
23.47	23
29.47	29

See Item 6 below.

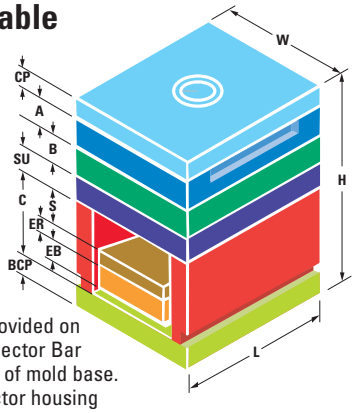

Ejector Housing Covers provided on both ends of mold when Ejector Bar Length **E** is nominal length of mold base. Customer to fabricate ejector housing covers for extended ejector bars.

WHEN ORDERING, PLEASE SPECIFY:

1. Quantity
2. Assembly Item Number (For "B" Series, replace "A" with "B")
3. Steel: #1, #2, #3 or #7 (for other steels, please specify)
4. Locating ring item number:
   Item No. 6501 (**D** = 3.990 Diameter of Locating Ring) standard
   Item No. 6504 (**D** = 3.990 Diameter of Locating Ring) clamp type
   (For other rings see DME Mold Components Catalog)
5. Type of sprue bushing, series letters: (i.e., B, etc.)
   O = Small dia. of sprue bushing orifice: .156, .218, .281 or .343
   R = Spherical radius of sprue bushing: .500 or .750
   (For sprue bushings see DME Mold Components Catalog)
6. Ejector Bar Length **E** (Ejector Bar Length at nominal length of mold base is highlighted in yellow. All other lengths provide an extended ejector bar)
7. Other **CP** Top Clamp Plate or **SU** Support Plate thicknesses as needed (Recommended thicknesses are highlighted in yellow)
8. Other **C** Riser heights as needed. Also, other **BCP** Bottom Clamp Plate thicknesses as needed. Riser height **C** and **BCP** Bottom Clamp Plate thicknesses which are highlighted in yellow are available in #1 Steel in a one-piece Welded Housing. Also, all Riser heights **C** and all **BCP** Bottom Clamp Plate thicknesses are available in #1 or #7 Steel in a Three-Piece Housing (for other steels, please specify)
9. Other features as needed (i.e. Guided Ejection, Lifting Holes, Pry Bar Slots, as well as Leader Pin, Return Pin, or Assembly Screw Relocations, etc.)
10. Method of shipment
    (For inch decimal to fractional conversion table, see page 278.)

11⅞ x 20" A-Series Mold Bases

See opposite page for general dimensions, ejector stroke data, locating rings, sprue bushings, ejector bar lengths and other ordering information.

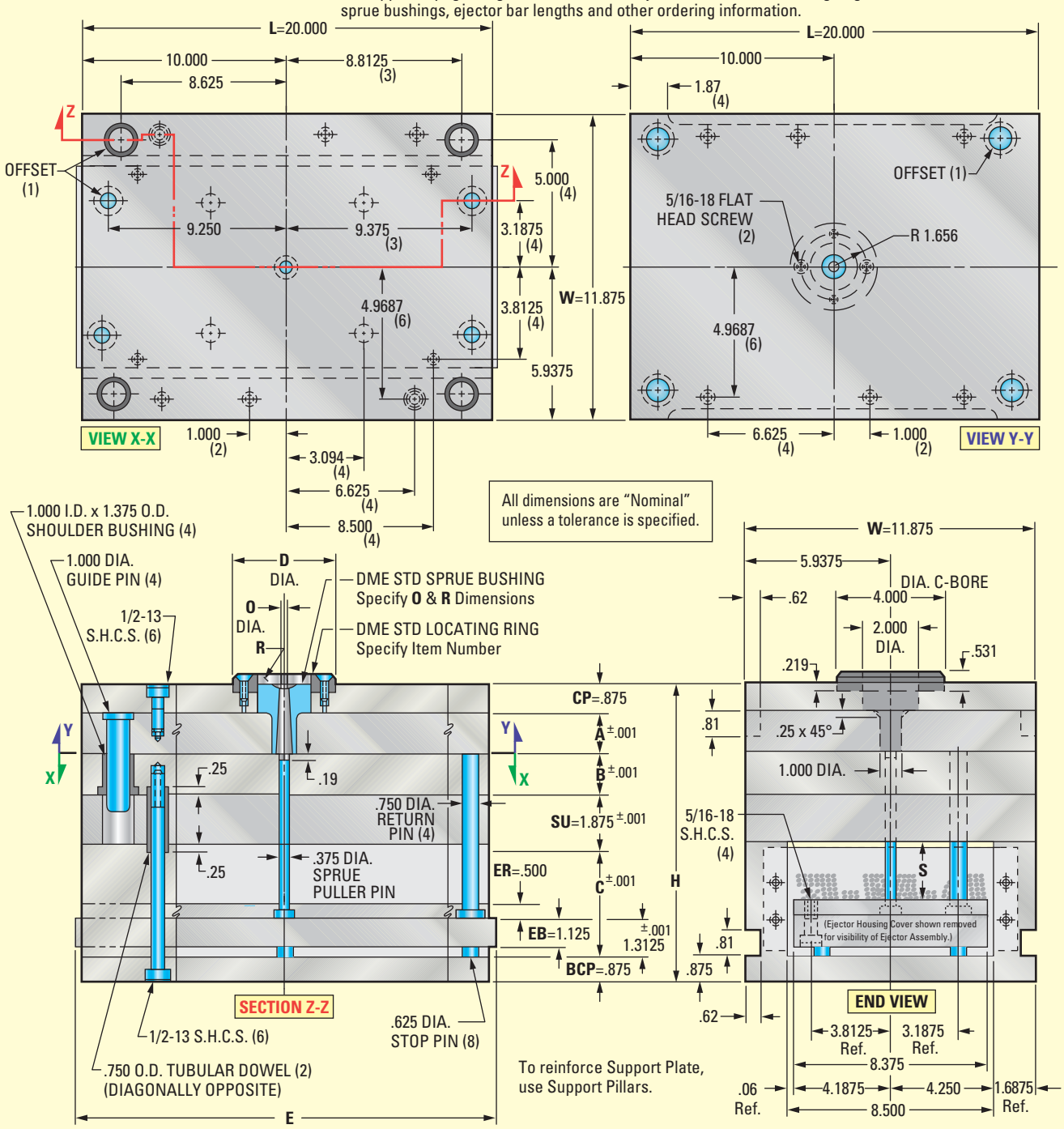

Mold Base Selections

A-Series Assembly

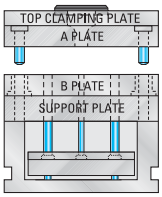

B-Series Assembly

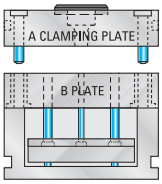

(For X-Series Stripper Plate, AX-Series and T-Series Mold Bases, see pages 173-198.)

Steel Configurations available in:

No. 1 Steel Assembly

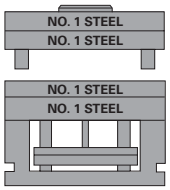

No. 2 Steel Assembly

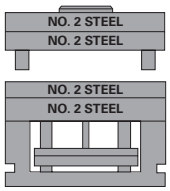

No. 3 Steel Assembly

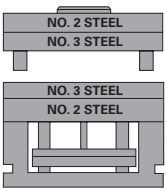

No. 7 Steel Assembly

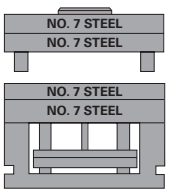

Other steel combinations also available. (Ejector Plates and Housings are No. 1 Steel, unless otherwise specified.) For additional Steel information, see page 42.

11⁷⁄₈ x 20" A-Series Mold Bases

A	B	C	H	ASSEMBLY ITEM NO.	NET WT.
.875 (7/8)	0.875	3.000	8.375	1220A-7-7	491
	1.375	3.000	8.875	1220A-7-13	525
	1.875	3.000	9.375	1220A-7-17	558
	2.375	3.500	10.375	1220A-7-23	601
	2.875	3.500	10.875	1220A-7-27	635
	3.375	4.000	11.875	1220A-7-33	678
	3.875	4.000	12.375	1220A-7-37	712
	4.875	4.500	13.875	1220A-7-47	788
	5.875	4.500	14.875	1220A-7-57	856

A	B	C	H	ASSEMBLY ITEM NO.	NET WT.
2.375 (2-3/8)	0.875	3.000	9.875	1220A-23-7	592
	1.375	3.500	10.875	1220A-23-13	635
	1.875	3.500	11.375	1220A-23-17	669
	2.375	3.500	11.875	1220A-23-23	702
	2.875	4.000	12.875	1220A-23-27	746
	3.375	4.000	13.375	1220A-23-33	779
	3.875	4.000	13.875	1220A-23-37	813
	4.875	4.500	15.375	1220A-23-47	890
	5.875	4.500	16.375	1220A-23-57	957

A	B	C	H	ASSEMBLY ITEM NO.	NET WT.
3.875 (3-7/8)	0.875	3.500	11.875	1220A-37-7	702
	1.375	3.500	12.375	1220A-37-13	736
	1.875	4.000	13.375	1220A-37-17	779
	2.375	4.500	14.375	1220A-37-23	822
	2.875	4.500	14.875	1220A-37-27	856
	3.375	4.500	15.375	1220A-37-33	890
	3.875	4.500	15.875	1220A-37-37	923
	4.875	4.500	16.875	1220A-37-47	991
	5.875	4.500	17.875	1220A-37-57	1058

A	B	C	H	ASSEMBLY ITEM NO.	NET WT.
1.375 (1-3/8)	0.875	3.000	8.875	1220A-13-7	525
	1.375	3.000	9.375	1220A-13-13	558
	1.875	3.000	9.875	1220A-13-17	592
	2.375	3.500	10.875	1220A-13-23	635
	2.875	3.500	11.375	1220A-13-27	669
	3.375	4.000	12.375	1220A-13-33	712
	3.875	4.000	12.875	1220A-13-37	746
	4.875	4.500	14.375	1220A-13-47	822
	5.875	4.500	15.375	1220A-13-57	890

A	B	C	H	ASSEMBLY ITEM NO.	NET WT.
2.875 (2-7/8)	0.875	3.000	10.375	1220A-27-7	625
	1.375	3.500	11.375	1220A-27-13	669
	1.875	3.500	11.875	1220A-27-17	702
	2.375	3.500	12.375	1220A-27-23	736
	2.875	4.000	13.375	1220A-27-27	779
	3.375	4.000	13.875	1220A-27-33	813
	3.875	4.000	14.375	1220A-27-37	846
	4.875	4.500	15.875	1220A-27-47	923
	5.875	4.500	16.875	1220A-27-57	991

A	B	C	H	ASSEMBLY ITEM NO.	NET WT.
4.875 (4-7/8)	0.875	3.500	12.875	1220A-47-7	770
	1.375	3.500	13.375	1220A-47-13	803
	1.875	4.000	14.375	1220A-47-17	846
	2.375	4.500	15.375	1220A-47-23	890
	2.875	4.500	15.875	1220A-47-27	923
	3.375	4.500	16.375	1220A-47-33	957
	3.875	4.500	16.875	1220A-47-37	991
	4.875	4.500	17.875	1220A-47-47	1058
	5.875	4.500	18.875	1220A-47-57	1125

A	B	C	H	ASSEMBLY ITEM NO.	NET WT.
1.875 (1-7/8)	0.875	3.000	9.375	1220A-17-7	558
	1.375	3.000	9.875	1220A-17-13	592
	1.875	3.000	10.375	1220A-17-17	625
	2.375	3.500	11.375	1220A-17-23	669
	2.875	3.500	11.875	1220A-17-27	702
	3.375	4.000	12.875	1220A-17-33	746
	3.875	4.000	13.375	1220A-17-37	779
	4.875	4.500	14.875	1220A-17-47	856
	5.875	4.500	15.875	1220A-17-57	923

A	B	C	H	ASSEMBLY ITEM NO.	NET WT.
3.375 (3-3/8)	0.875	3.500	11.375	1220A-33-7	669
	1.375	3.500	11.875	1220A-33-13	702
	1.875	3.500	12.375	1220A-33-17	736
	2.375	4.000	13.375	1220A-33-23	779
	2.875	4.000	13.875	1220A-33-27	813
	3.375	4.500	14.875	1220A-33-33	856
	3.875	4.500	15.375	1220A-33-37	890
	4.875	4.500	16.375	1220A-33-47	957
	5.875	4.500	17.375	1220A-33-57	1024

A	B	C	H	ASSEMBLY ITEM NO.	NET WT.
5.875 (5-7/8)	0.875	3.500	13.875	1220A-57-7	837
	1.375	4.000	14.875	1220A-57-13	880
	1.875	4.500	15.875	1220A-57-17	923
	2.375	4.500	16.375	1220A-57-23	957
	2.875	4.500	16.875	1220A-57-27	991
	3.375	4.500	17.375	1220A-57-33	1024
	3.875	4.500	17.875	1220A-57-37	1058
	4.875	4.500	18.875	1220A-57-47	1125
	5.875	4.500	19.875	1220A-57-57	1192

Other plate thickness, riser height and ejector bar length options available

CP TOP CLAMP PLATE THICKNESS	SU SUPPORT PLATE THICKNESS	BCP BOTTOM CLAMP PLATE THICKNESS	PLATE THICKNESS NO.
0.875	0.875	0.875	7
1.375	1.375	1.375	13
1.875	1.875	1.875	17
2.375	2.375	2.375	23
2.875	2.875	2.875	27
3.375	3.375	3.375	33
3.875	3.875	3.875	37
4.875	4.875	4.875	47
5.875	5.875	5.875	57

See Items 7 & 8 below.

C RISER		
C RISER HEIGHT	RISER HEIGHT NO.	S MAX. STROKE OF EJECTOR BAR
3.000	30	1.188
3.500	35	1.688
4.000	40	2.188
4.500	45	2.688
5.000	50	3.188
5.500	55	3.688
6.000	60	4.188

See Item 8 below.

EB EJECTOR BAR	
E LENGTH NOM.	EJECTOR BAR LENGTH NO.
19.97	20
23.47	23
29.47	29

See Item 6 below.

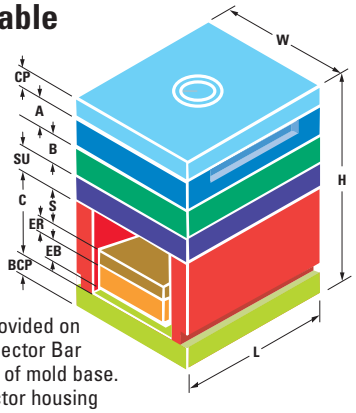

Ejector Housing Covers provided on both ends of mold when Ejector Bar Length **E** is nominal length of mold base. Customer to fabricate ejector housing covers for extended ejector bars.

WHEN ORDERING, PLEASE SPECIFY:

1. Quantity
2. Assembly Item Number (For "B" Series, replace "A" with "B")
3. Steel: #1, #2, #3 or #7 (for other steels, please specify)
4. Locating ring item number:
   Item No. 6501 (**D** = 3.990 Diameter of Locating Ring) standard
   Item No. 6504 (**D** = 3.990 Diameter of Locating Ring) clamp type
   (For other rings see DME Mold Components Catalog)
5. Type of sprue bushing, series letters: (i.e., B, etc.)
   O = Small dia. of sprue bushing orifice: .156, .218, .281 or .343
   R = Spherical radius of sprue bushing: .500 or .750
   (For sprue bushings see DME Mold Components Catalog)
6. Ejector Bar Length **E** (Ejector Bar Length at nominal length of mold base is highlighted in yellow. All other lengths provide an extended ejector bar)
7. Other **CP** Top Clamp Plate or **SU** Support Plate thicknesses as needed (Recommended thicknesses are highlighted in yellow)
8. Other **C** Riser heights as needed. Also, other **BCP** Bottom Clamp Plate thicknesses as needed. Riser height **C** and **BCP** Bottom Clamp Plate thicknesses which are highlighted in yellow are available in #1 Steel in a one-piece Welded Housing. Also, all Riser heights **C** and all **BCP** Bottom Clamp Plate thicknesses are available in #1 or #7 Steel in a Three-Piece Housing (for other steels, please specify)
9. Other features as needed (i.e. Guided Ejection, Lifting Holes, Pry Bar Slots, as well as Leader Pin, Return Pin, or Assembly Screw Relocations, etc.)
10. Method of shipment
    (For inch decimal to fractional conversion table, see page 278.)

11⅞ x 23½ A-Series Mold Bases

See opposite page for general dimensions, ejector stroke data, locating rings, sprue bushings, ejector bar lengths and other ordering information.

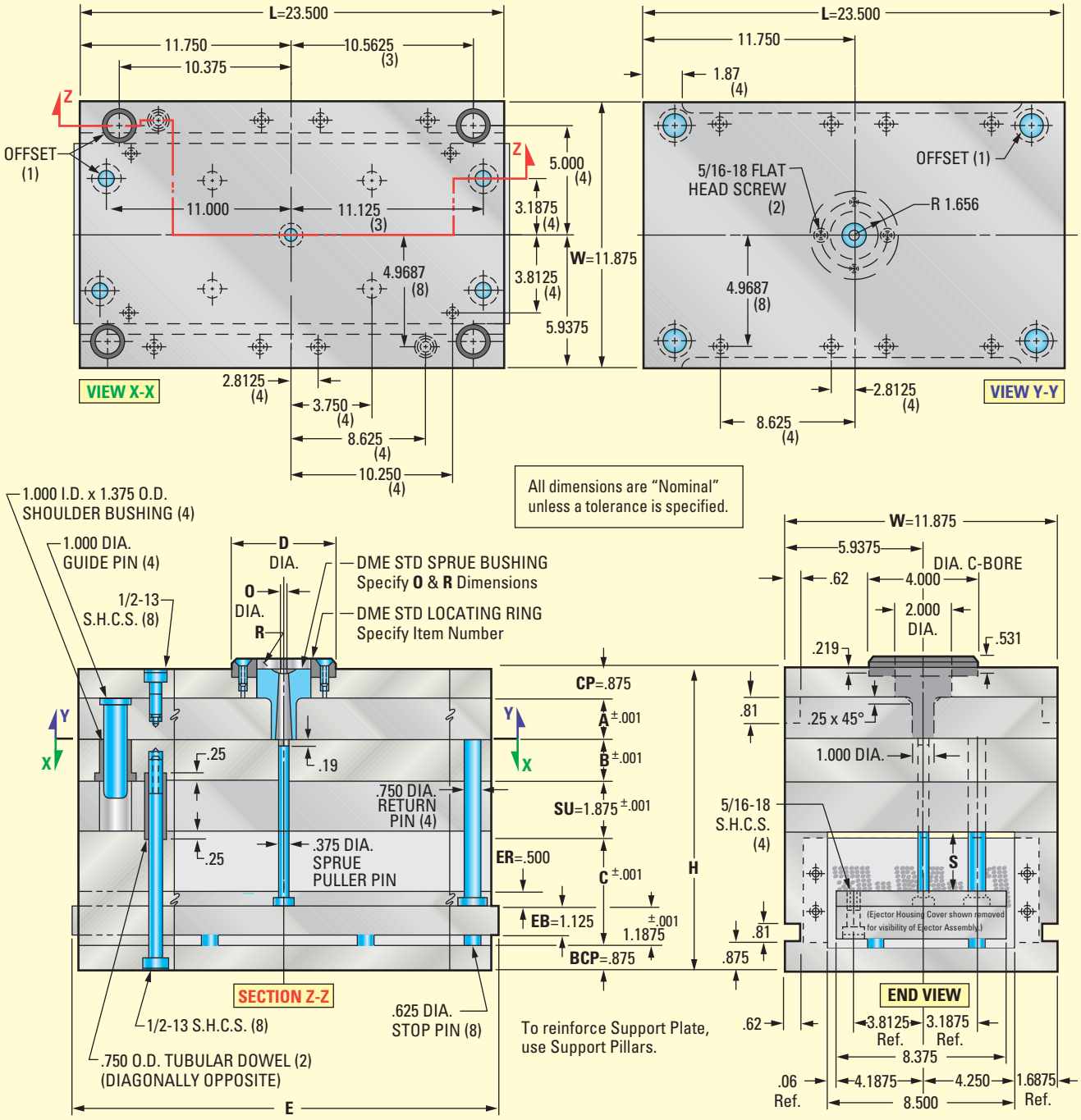

Mold Base Selections

A-Series Assembly

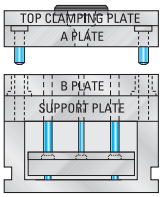

B-Series Assembly

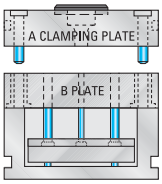

(For X-Series Stripper Plate, AX-Series and T-Series Mold Bases, see pages 173-198.)

Steel Configurations available in:

No. 1 Steel Assembly

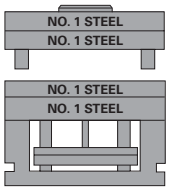

No. 2 Steel Assembly

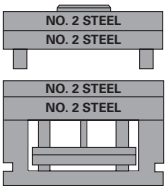

No. 3 Steel Assembly

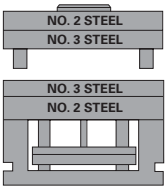

No. 7 Steel Assembly

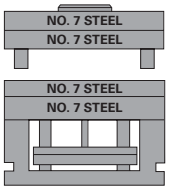

Other steel combinations also available. (Ejector Plates and Housings are No. 1 Steel, unless otherwise specified.) For additional Steel information, see page 42.

11⁷⁄₈ x 23¹⁄₂ A-Series Mold Bases

A	B	C	H	ASSEMBLY ITEM NO.	NET WT.
1.375 (1-3/8)	1.375	3.000	9.375	1223A-13-13	656
	1.875	3.000	9.875	1223A-13-17	695
	2.375	3.500	10.875	1223A-13-23	746
	2.875	3.500	11.375	1223A-13-27	786
	3.375	4.000	12.375	1223A-13-33	836
	3.875	4.000	12.875	1223A-13-37	876
	4.875	4.500	14.375	1223A-13-47	966
	5.875	4.500	15.375	1223A-13-57	1045

A	B	C	H	ASSEMBLY ITEM NO.	NET WT.
2.875 (2-7/8)	1.375	3.500	11.375	1223A-27-13	786
	1.875	3.500	11.875	1223A-27-17	825
	2.375	3.500	12.375	1223A-27-23	865
	2.875	4.000	13.375	1223A-27-27	915
	3.375	4.000	13.875	1223A-27-33	955
	3.875	4.000	14.375	1223A-27-37	994
	4.875	4.500	15.875	1223A-27-47	1085
	5.875	4.500	16.875	1223A-27-57	1164

A	B	C	H	ASSEMBLY ITEM NO.	NET WT.
4.875 (4-7/8)	1.375	3.500	13.375	1223A-47-13	944
	1.875	4.000	14.375	1223A-47-17	994
	2.375	4.500	15.375	1223A-47-23	1045
	2.875	4.500	15.875	1223A-47-27	1085
	3.375	4.500	16.375	1223A-47-33	1124
	3.875	4.500	16.875	1223A-47-37	1164
	4.875	4.500	17.875	1223A-47-47	1243
	5.875	4.500	18.875	1223A-47-57	1322

A	B	C	H	ASSEMBLY ITEM NO.	NET WT.
1.875 (1-7/8)	1.375	3.000	9.875	1223A-17-13	696
	1.875	3.000	10.375	1223A-17-17	735
	2.375	3.500	11.375	1223A-17-23	786
	2.875	3.500	11.875	1223A-17-27	825
	3.375	4.000	12.875	1223A-17-33	876
	3.875	4.000	13.375	1223A-17-37	915
	4.875	4.500	14.875	1223A-17-47	1006
	5.875	4.500	15.875	1223A-17-57	1085

A	B	C	H	ASSEMBLY ITEM NO.	NET WT.
3.375 (3-3/8)	1.375	3.500	11.875	1223A-33-13	825
	1.875	3.500	12.375	1223A-33-17	865
	2.375	4.000	13.375	1223A-33-23	915
	2.875	4.000	13.875	1223A-33-27	955
	3.375	4.500	14.875	1223A-33-33	1006
	3.875	4.500	15.375	1223A-33-37	1045
	4.875	4.500	16.375	1223A-33-47	1124
	5.875	4.500	17.375	1223A-33-57	1203

A	B	C	H	ASSEMBLY ITEM NO.	NET WT.
5.875 (5-7/8)	1.375	4.000	14.875	1223A-57-13	1034
	1.875	4.500	15.875	1223A-57-17	1085
	2.375	4.500	16.375	1223A-57-23	1124
	2.875	4.500	16.875	1223A-57-27	1164
	3.375	4.500	17.375	1223A-57-33	1203
	3.875	4.500	17.875	1223A-57-37	1243
	4.875	4.500	18.875	1223A-57-47	1322
	5.875	4.500	19.875	1223A-57-57	1401

A	B	C	H	ASSEMBLY ITEM NO.	NET WT.
2.375 (2-3/8)	1.375	3.500	10.875	1223A-23-13	746
	1.875	3.500	11.375	1223A-23-17	786
	2.375	3.500	11.875	1223A-23-23	825
	2.875	4.000	12.875	1223A-23-27	876
	3.375	4.000	13.375	1223A-23-33	915
	3.875	4.000	13.875	1223A-23-37	955
	4.875	4.500	15.375	1223A-23-47	1045
	5.875	4.500	16.375	1223A-23-57	1124

A	B	C	H	ASSEMBLY ITEM NO.	NET WT.
3.875 (3-7/8)	1.375	3.500	12.375	1223A-37-13	865
	1.875	4.000	13.375	1223A-37-17	915
	2.375	4.500	14.375	1223A-37-23	966
	2.875	4.500	14.875	1223A-37-27	1006
	3.375	4.500	15.375	1223A-37-33	1045
	3.875	4.500	15.875	1223A-37-37	1085
	4.875	4.500	16.875	1223A-37-47	1164
	5.875	4.500	17.875	1223A-37-57	1243

Other plate thickness, riser height and ejector bar length options available

CP TOP CLAMP PLATE THICKNESS	SU SUPPORT PLATE THICKNESS	BCP BOTTOM CLAMP PLATE THICKNESS	PLATE THICKNESS NO.
0.875	0.875	0.875	7
1.375	1.375	1.375	13
1.875	1.875	1.875	17
2.375	2.375	2.375	23
2.875	2.875	2.875	27
3.375	3.375	3.375	33
3.875	3.875	3.875	37
4.875	4.875	4.875	47
5.875	5.875	5.875	57

See Items 7 & 8 below.

C RISER		
C RISER HEIGHT	RISER HEIGHT NO.	S MAX. STROKE OF EJECTOR BAR
3.000	30	1.188
3.500	35	1.688
4.000	40	2.188
4.500	45	2.688
5.000	50	3.188
5.500	55	3.688
6.000	60	4.188

See Item 8 below.

EB EJECTOR BAR	
E LENGTH NOM.	EJECTOR BAR LENGTH NO.
23.47	23
29.47	29

See Item 6 below.

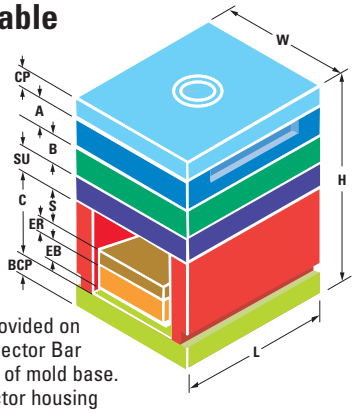

Ejector Housing Covers provided on both ends of mold when Ejector Bar Length **E** is nominal length of mold base. Customer to fabricate ejector housing covers for extended ejector bars.

WHEN ORDERING, PLEASE SPECIFY:

1. Quantity
2. Assembly Item Number (For "B" Series, replace "A" with "B")
3. Steel: #1, #2, #3 or #7 (for other steels, please specify)
4. Locating ring item number:
   Item No. 6501 (**D** = 3.990 Diameter of Locating Ring) standard
   Item No. 6504 (**D** = 3.990 Diameter of Locating Ring) clamp type
   (For other rings see DME Mold Components Catalog)
5. Type of sprue bushing, series letters: (i.e., B, etc.)
   O = Small dia. of sprue bushing orifice: .156, .218, .281 or .343
   R = Spherical radius of sprue bushing: .500 or .750
   (For sprue bushings see DME Mold Components Catalog)
6. Ejector Bar Length **E** (Ejector Bar Length at nominal length of mold base is highlighted in yellow. All other lengths provide an extended ejector bar)
7. Other **CP** Top Clamp Plate or **SU** Support Plate thicknesses as needed (Recommended thicknesses are highlighted in yellow)
8. Other **C** Riser heights as needed. Also, other **BCP** Bottom Clamp Plate thicknesses as needed. Riser height **C** and **BCP** Bottom Clamp Plate thicknesses which are highlighted in yellow are available in #1 Steel in a one-piece Welded Housing. Also, all Riser heights **C** and all **BCP** Bottom Clamp Plate thicknesses are available in #1 or #7 Steel in a Three-Piece Housing (for other steels, please specify)
9. Other features as needed (i.e. Guided Ejection, Lifting Holes, Pry Bar Slots, as well as Leader Pin, Return Pin, or Assembly Screw Relocations, etc.)
10. Method of shipment
    (For inch decimal to fractional conversion table, see page 278.)

13³/₈ x 15" A-Series Mold Bases

See opposite page for general dimensions, ejector stroke data, locating rings, sprue bushings, ejector bar lengths and other ordering information.

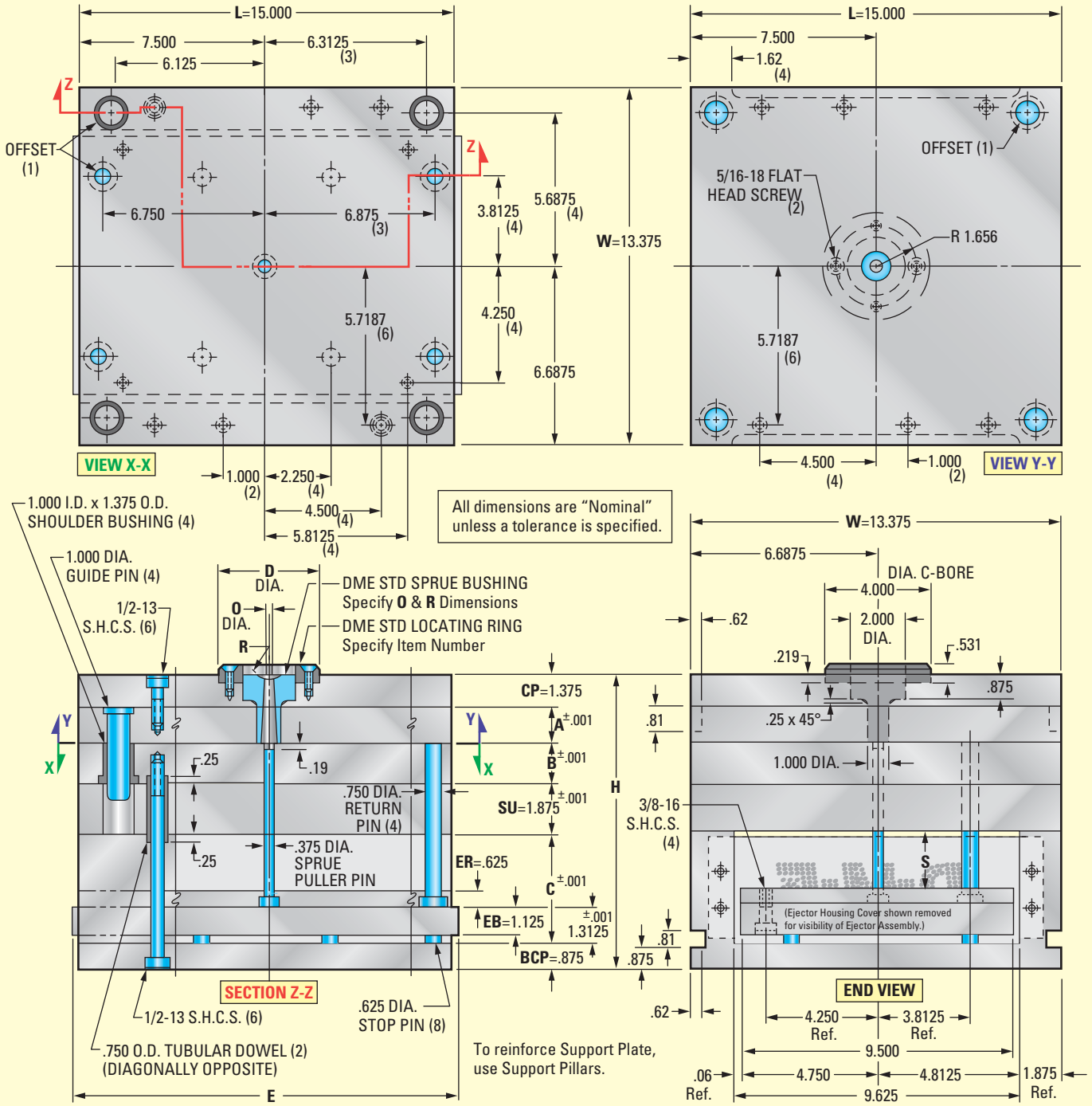

Mold Base Selections

A-Series Assembly

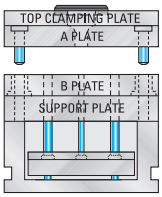

B-Series Assembly

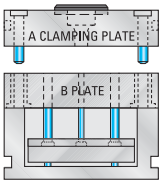

(For X-Series Stripper Plate, AX-Series and T-Series Mold Bases, see pages 173-198.)

Steel Configurations available in:

No. 1 Steel Assembly

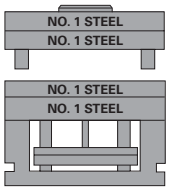

No. 2 Steel Assembly

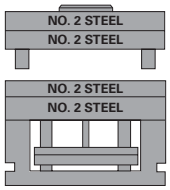

No. 3 Steel Assembly

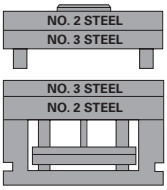

No. 7 Steel Assembly

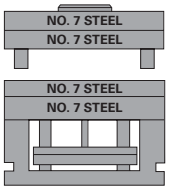

Other steel combinations also available. (Ejector Plates and Housings are No. 1 Steel, unless otherwise specified.) For additional Steel information, see page 42.

13³/₈ x 15" A-Series Mold Bases

A	B	C	H	ASSEMBLY ITEM NO.	NET WT.
.875 (7/8)	0.875	3.000	8.875	1315A-7-7	449
	1.375	3.000	9.375	1315A-7-13	477
	1.875	3.000	9.875	1315A-7-17	505
	2.375	3.500	10.875	1315A-7-23	542
	2.875	3.500	11.375	1315A-7-27	570
	3.375	4.000	12.375	1315A-7-33	607
	3.875	4.000	12.875	1315A-7-37	635
	4.875	4.500	14.375	1315A-7-47	700
	5.875	4.500	15.375	1315A-7-57	757

A	B	C	H	ASSEMBLY ITEM NO.	NET WT.
2.375 (2-3/8)	0.875	3.000	10.375	1315A-23-7	534
	1.375	3.500	11.375	1315A-23-13	570
	1.875	3.500	11.875	1315A-23-17	599
	2.375	3.500	12.375	1315A-23-23	627
	2.875	4.000	13.375	1315A-23-27	663
	3.375	4.000	13.875	1315A-23-33	692
	3.875	4.000	14.375	1315A-23-37	720
	4.875	4.500	15.875	1315A-23-47	785
	5.875	4.500	16.875	1315A-23-57	842

A	B	C	H	ASSEMBLY ITEM NO.	NET WT.
3.875 (3-7/8)	0.875	3.500	12.375	1315A-37-7	627
	1.375	3.500	12.875	1315A-37-13	655
	1.875	4.000	13.875	1315A-37-17	692
	2.375	4.500	14.875	1315A-37-23	728
	2.875	4.500	15.375	1315A-37-27	757
	3.375	4.500	15.875	1315A-37-33	785
	3.875	4.500	16.375	1315A-37-37	813
	4.875	4.500	17.375	1315A-37-47	870
	5.875	4.500	18.375	1315A-37-57	927

A	B	C	H	ASSEMBLY ITEM NO.	NET WT.
1.375 (1-3/8)	0.875	3.000	9.375	1315A-13-7	477
	1.375	3.000	9.875	1315A-13-13	505
	1.875	3.000	10.375	1315A-13-17	534
	2.375	3.500	11.375	1315A-13-23	570
	2.875	3.500	11.875	1315A-13-27	599
	3.375	4.000	12.875	1315A-13-33	635
	3.875	4.000	13.375	1315A-13-37	663
	4.875	4.500	14.875	1315A-13-47	728
	5.875	4.500	15.875	1315A-13-57	785

A	B	C	H	ASSEMBLY ITEM NO.	NET WT.
2.875 (2-7/8)	0.875	3.000	10.875	1315A-27-7	562
	1.375	3.500	11.875	1315A-27-13	599
	1.875	3.500	12.375	1315A-27-17	627
	2.375	3.500	12.875	1315A-27-23	655
	2.875	4.000	13.875	1315A-27-27	692
	3.375	4.000	14.375	1315A-27-33	720
	3.875	4.000	14.875	1315A-27-37	749
	4.875	4.500	16.375	1315A-27-47	813
	5.875	4.500	17.375	1315A-27-57	870

A	B	C	H	ASSEMBLY ITEM NO.	NET WT.
4.875 (4-7/8)	0.875	3.500	13.375	1315A-47-7	684
	1.375	3.500	13.875	1315A-47-13	712
	1.875	4.000	14.875	1315A-47-17	749
	2.375	4.500	15.875	1315A-47-23	785
	2.875	4.500	16.375	1315A-47-27	813
	3.375	4.500	16.875	1315A-47-33	842
	3.875	4.500	17.375	1315A-47-37	870
	4.875	4.500	18.375	1315A-47-47	927
	5.875	4.500	19.375	1315A-47-57	984

A	B	C	H	ASSEMBLY ITEM NO.	NET WT.
1.875 (1-7/8)	0.875	3.000	9.875	1315A-17-7	505
	1.375	3.000	10.375	1315A-17-13	534
	1.875	3.000	10.875	1315A-17-17	562
	2.375	3.500	11.875	1315A-17-23	599
	2.875	3.500	12.375	1315A-17-27	627
	3.375	4.000	13.375	1315A-17-33	663
	3.875	4.000	13.875	1315A-17-37	692
	4.875	4.500	15.375	1315A-17-47	757
	5.875	4.500	16.375	1315A-17-57	813

A	B	C	H	ASSEMBLY ITEM NO.	NET WT.
3.375 (3-3/8)	0.875	3.500	11.875	1315A-33-7	599
	1.375	3.500	12.375	1315A-33-13	627
	1.875	3.500	12.875	1315A-33-17	655
	2.375	4.000	13.875	1315A-33-23	692
	2.875	4.000	14.375	1315A-33-27	720
	3.375	4.500	15.375	1315A-33-33	757
	3.875	4.500	15.875	1315A-33-37	785
	4.875	4.500	16.875	1315A-33-47	842
	5.875	4.500	17.875	1315A-33-57	899

A	B	C	H	ASSEMBLY ITEM NO.	NET WT.
5.875 (5-7/8)	0.875	3.500	14.375	1315A-57-7	741
	1.375	4.000	15.375	1315A-57-13	777
	1.875	4.500	16.375	1315A-57-17	813
	2.375	4.500	16.875	1315A-57-23	842
	2.875	4.500	17.375	1315A-57-27	870
	3.375	4.500	17.875	1315A-57-33	899
	3.875	4.500	18.375	1315A-57-37	927
	4.875	4.500	19.375	1315A-57-47	984
	5.875	4.500	20.375	1315A-57-57	1041

Other plate thickness, riser height and ejector bar length options available

CP TOP CLAMP PLATE THICKNESS	SU SUPPORT PLATE THICKNESS	BCP BOTTOM CLAMP PLATE THICKNESS	PLATE THICKNESS NO.
0.875	0.875	0.875	7
1.375	1.375	1.375	13
1.875	1.875	1.875	17
2.375	2.375	2.375	23
2.875	2.875	2.875	27
3.375	3.375	3.375	33
3.875	3.875	3.875	37
4.875	4.875	4.875	47
5.875	5.875	5.875	57

See Items 7 & 8 below.

C RISER		
C RISER HEIGHT	RISER HEIGHT NO.	S MAX. STROKE OF EJECTOR BAR
3.000	30	1.063
3.500	35	1.563
4.000	40	2.063
4.500	45	2.563
5.000	50	3.063
5.500	55	3.563
6.000	60	4.063

See Item 8 below.

EB EJECTOR BAR	
E LENGTH NOM.	EJECTOR BAR LENGTH NO.
14.97	15
17.97	18
20.72	21
23.47	23
25.97	26
29.47	29
35.47	35

See Item 6 below.

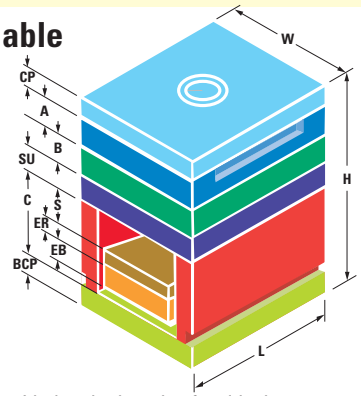

Ejector Housing Covers provided on both ends of mold when Ejector Bar Length **E** is nominal length of mold base. Customer to fabricate ejector housing covers for extended ejector bars.

WHEN ORDERING, PLEASE SPECIFY:

1. Quantity
2. Assembly Item Number (For "B" Series, replace "A" with "B")
3. Steel: #1, #2, #3 or #7 (for other steels, please specify)
4. Locating ring item number:
   Item No. 6501 (**D** = 3.990 Diameter of Locating Ring) standard
   Item No. 6504 (**D** = 3.990 Diameter of Locating Ring) clamp type
   (For other rings see DME Mold Components Catalog)
5. Type of sprue bushing, series letters: (i.e., B, etc.)
   O = Small dia. of sprue bushing orifice: .156, .218, .281 or .343
   R = Spherical radius of sprue bushing: .500 or .750
   (For sprue bushings see DME Mold Components Catalog)
6. Ejector Bar Length **E** (Ejector Bar Length at nominal length of mold base is highlighted in yellow. All other lengths provide an extended ejector bar)
7. Other **CP** Top Clamp Plate or **SU** Support Plate thicknesses as needed (Recommended thicknesses are highlighted in yellow)
8. Other **C** Riser heights as needed. Also, other **BCP** Bottom Clamp Plate thicknesses as needed. Riser height **C** and **BCP** Bottom Clamp Plate thicknesses which are highlighted in yellow are available in #1 Steel in a one-piece Welded Housing. Also, all Riser heights **C** and all **BCP** Bottom Clamp Plate thicknesses are available in #1 or #7 Steel in a Three-Piece Housing (for other steels, please specify)
9. Other features as needed (i.e. Guided Ejection, Lifting Holes, Pry Bar Slots, as well as Leader Pin, Return Pin, or Assembly Screw Relocations, etc.)
10. Method of shipment
    (For inch decimal to fractional conversion table, see page 278.)

13³/₈ x 18" A-Series Mold Bases

See opposite page for general dimensions, ejector stroke data, locating rings, sprue bushings, ejector bar lengths and other ordering information.

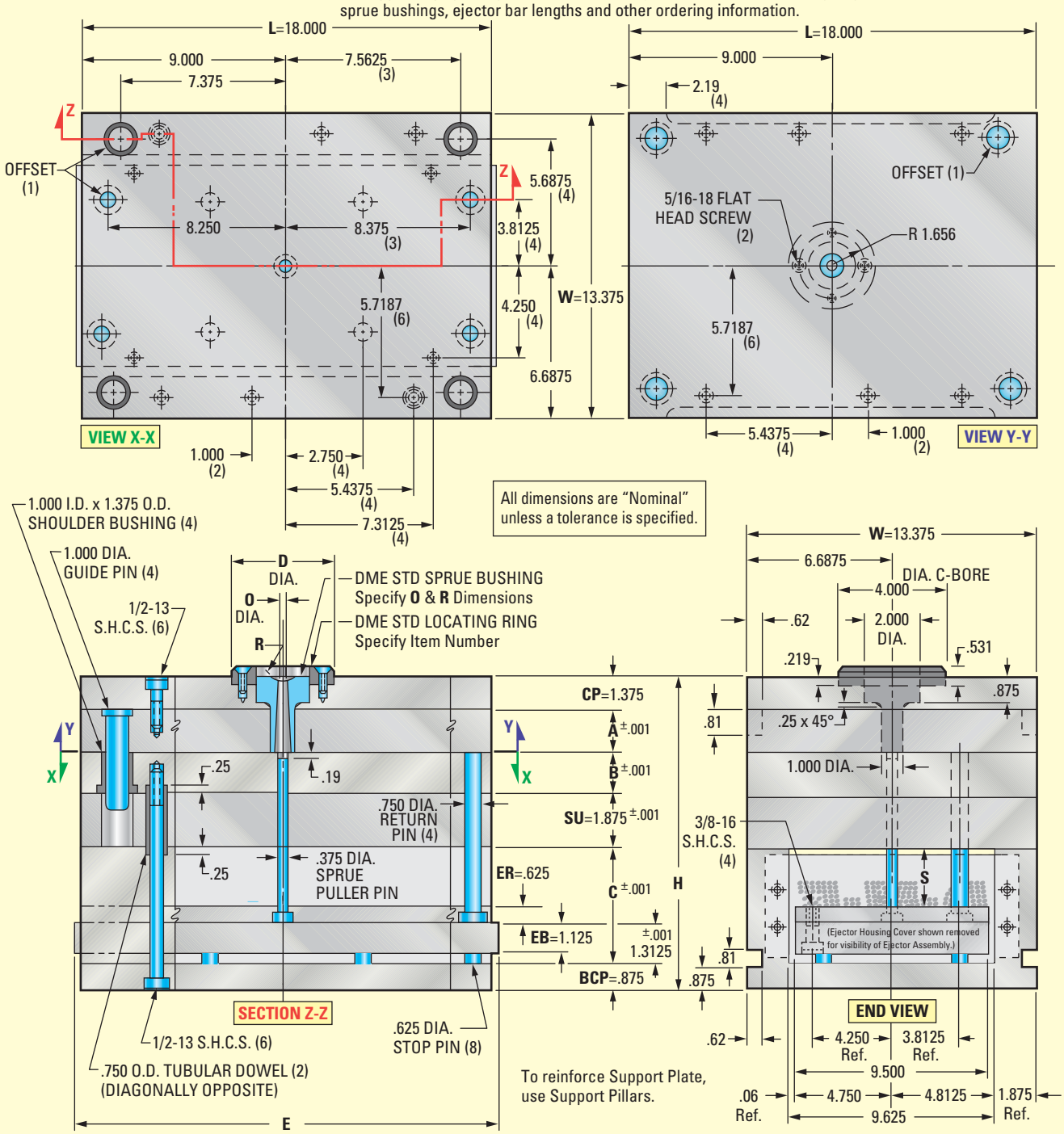

All dimensions are "Nominal" unless a tolerance is specified.

Mold Base Selections

A-Series Assembly

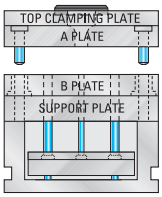

B-Series Assembly

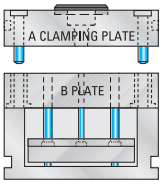

(For X-Series Stripper Plate, AX-Series and T-Series Mold Bases, see pages 173-198.)

Steel Configurations available in:

No. 1 Steel Assembly

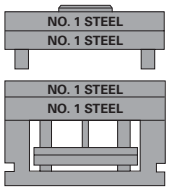

No. 2 Steel Assembly

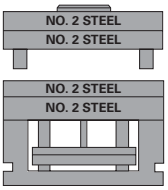

No. 3 Steel Assembly

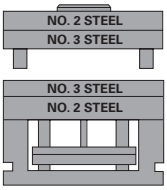

No. 7 Steel Assembly

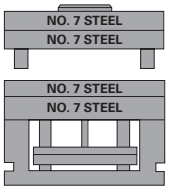

Other steel combinations also available. (Ejector Plates and Housings are No. 1 Steel, unless otherwise specified.) For additional Steel information, see page 42.

13³/₈ x 18" A-Series Mold Bases

A	B	C	H	ASSEMBLY ITEM NO.	NET WT.
.875 (7/8)	0.875	3.000	8.875	1318A-7-7	538
	1.375	3.000	9.375	1318A-7-13	572
	1.875	3.000	9.875	1318A-7-17	606
	2.375	3.500	10.875	1318A-7-23	650
	2.875	3.500	11.375	1318A-7-27	684
	3.375	4.000	12.375	1318A-7-33	728
	3.875	4.000	12.875	1318A-7-37	762
	4.875	4.500	14.375	1318A-7-47	840
	5.875	4.500	15.375	1318A-7-57	908

A	B	C	H	ASSEMBLY ITEM NO.	NET WT.
2.375 (2-3/8)	0.875	3.000	10.375	1318A-23-7	640
	1.375	3.500	11.375	1318A-23-13	684
	1.875	3.500	11.875	1318A-23-17	718
	2.375	3.500	12.375	1318A-23-23	752
	2.875	4.000	13.375	1318A-23-27	796
	3.375	4.000	13.875	1318A-23-33	830
	3.875	4.000	14.375	1318A-23-37	864
	4.875	4.500	15.875	1318A-23-47	942
	5.875	4.500	16.875	1318A-23-57	1010

A	B	C	H	ASSEMBLY ITEM NO.	NET WT.
3.875 (3-7/8)	0.875	3.500	12.375	1318A-37-7	752
	1.375	3.500	12.875	1318A-37-13	786
	1.875	4.000	13.875	1318A-37-17	830
	2.375	4.500	14.875	1318A-37-23	874
	2.875	4.500	15.375	1318A-37-27	908
	3.375	4.500	15.875	1318A-37-33	942
	3.875	4.500	16.375	1318A-37-37	976
	4.875	4.500	17.375	1318A-37-47	1044
	5.875	4.500	18.375	1318A-37-57	1112

A	B	C	H	ASSEMBLY ITEM NO.	NET WT.
1.375 (1-3/8)	0.875	3.000	9.375	1318A-13-7	572
	1.375	3.000	9.875	1318A-13-13	606
	1.875	3.000	10.375	1318A-13-17	640
	2.375	3.500	11.375	1318A-13-23	684
	2.875	3.500	11.875	1318A-13-27	718
	3.375	4.000	12.875	1318A-13-33	762
	3.875	4.000	13.375	1318A-13-37	796
	4.875	4.500	14.875	1318A-13-47	874
	5.875	4.500	15.875	1318A-13-57	942

A	B	C	H	ASSEMBLY ITEM NO.	NET WT.
2.875 (2-7/8)	0.875	3.000	10.875	1318A-27-7	675
	1.375	3.500	11.875	1318A-27-13	718
	1.875	3.500	12.375	1318A-27-17	752
	2.375	3.500	12.875	1318A-27-23	786
	2.875	4.000	13.875	1318A-27-27	830
	3.375	4.000	14.375	1318A-27-33	864
	3.875	4.000	14.875	1318A-27-37	898
	4.875	4.500	16.375	1318A-27-47	976
	5.875	4.500	17.375	1318A-27-57	1044

A	B	C	H	ASSEMBLY ITEM NO.	NET WT.
4.875 (4-7/8)	0.875	3.500	13.375	1318A-47-7	821
	1.375	3.500	13.875	1318A-47-13	855
	1.875	4.000	14.875	1318A-47-17	898
	2.375	4.500	15.875	1318A-47-23	942
	2.875	4.500	16.375	1318A-47-27	976
	3.375	4.500	16.875	1318A-47-33	1010
	3.875	4.500	17.375	1318A-47-37	1044
	4.875	4.500	18.375	1318A-47-47	1112
	5.875	4.500	19.375	1318A-47-57	1181

A	B	C	H	ASSEMBLY ITEM NO.	NET WT.
1.875 (1-7/8)	0.875	3.000	9.875	1318A-17-7	606
	1.375	3.000	10.375	1318A-17-13	640
	1.875	3.000	10.875	1318A-17-17	675
	2.375	3.500	11.875	1318A-17-23	718
	2.875	3.500	12.375	1318A-17-27	752
	3.375	4.000	13.375	1318A-17-33	796
	3.875	4.000	13.875	1318A-17-37	830
	4.875	4.500	15.375	1318A-17-47	908
	5.875	4.500	16.375	1318A-17-57	976

A	B	C	H	ASSEMBLY ITEM NO.	NET WT.
3.375 (3-3/8)	0.875	3.500	11.875	1318A-33-7	718
	1.375	3.500	12.375	1318A-33-13	752
	1.875	3.500	12.875	1318A-33-17	786
	2.375	4.000	13.875	1318A-33-23	830
	2.875	4.000	14.375	1318A-33-27	864
	3.375	4.500	15.375	1318A-33-33	908
	3.875	4.500	15.875	1318A-33-37	942
	4.875	4.500	16.875	1318A-33-47	1010
	5.875	4.500	17.875	1318A-33-57	1078

A	B	C	H	ASSEMBLY ITEM NO.	NET WT.
5.875 (5-7/8)	0.875	3.500	14.375	1318A-57-7	889
	1.375	4.000	15.375	1318A-57-13	932
	1.875	4.500	16.375	1318A-57-17	976
	2.375	4.500	16.875	1318A-57-23	1010
	2.875	4.500	17.375	1318A-57-27	1044
	3.375	4.500	17.875	1318A-57-33	1078
	3.875	4.500	18.375	1318A-57-37	1112
	4.875	4.500	19.375	1318A-57-47	1181
	5.875	4.500	20.375	1318A-57-57	1249

Other plate thickness, riser height and ejector bar length options available

CP TOP CLAMP PLATE THICKNESS	SU SUPPORT PLATE THICKNESS	BCP BOTTOM CLAMP PLATE THICKNESS	PLATE THICKNESS NO.
0.875	0.875	0.875	7
1.375	1.375	1.375	13
1.875	1.875	1.875	17
2.375	2.375	2.375	23
2.875	2.875	2.875	27
3.375	3.375	3.375	33
3.875	3.875	3.875	37
4.875	4.875	4.875	47
5.875	5.875	5.875	57

See Items 7 & 8 below.

C RISER		
C RISER HEIGHT	RISER HEIGHT NO.	S MAX. STROKE OF EJECTOR BAR
3.000	30	1.063
3.500	35	1.563
4.000	40	2.063
4.500	45	2.563
5.000	50	3.063
5.500	55	3.563
6.000	60	4.063

See Item 8 below.

EB EJECTOR BAR	
E LENGTH NOM.	EJECTOR BAR LENGTH NO.
17.97	18
20.72	21
23.47	23
25.97	26
29.47	29
35.47	35

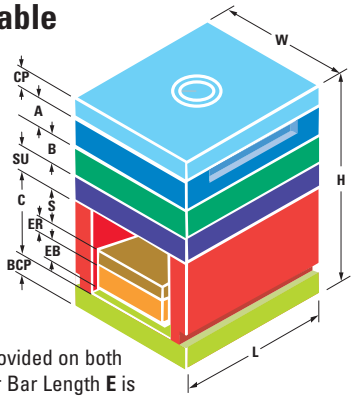

See Item 6 below.
Ejector Housing Covers provided on both ends of mold when Ejector Bar Length **E** is nominal length of mold base. Customer to fabricate ejector housing covers for extended ejector bars.

WHEN ORDERING, PLEASE SPECIFY:

1. Quantity
2. Assembly Item Number (For "B" Series, replace "A" with "B")
3. Steel: #1, #2, #3 or #7 (for other steels, please specify)
4. Locating ring item number:
   Item No. 6501 (**D** = 3.990 Diameter of Locating Ring) standard
   Item No. 6504 (**D** = 3.990 Diameter of Locating Ring) clamp type
   (For other rings see DME Mold Components Catalog)
5. Type of sprue bushing, series letters: (i.e., B, etc.)
   O = Small dia. of sprue bushing orifice: .156, .218, .281 or .343
   R = Spherical radius of sprue bushing: .500 or .750
   (For sprue bushings see DME Mold Components Catalog)
6. Ejector Bar Length **E** (Ejector Bar Length at nominal length of mold base is highlighted in yellow. All other lengths provide an extended ejector bar)
7. Other **CP** Top Clamp Plate or **SU** Support Plate thicknesses as needed (Recommended thicknesses are highlighted in yellow)
8. Other **C** Riser heights as needed. Also, other **BCP** Bottom Clamp Plate thicknesses as needed. Riser height **C** and **BCP** Bottom Clamp Plate thicknesses which are highlighted in yellow are available in #1 Steel in a one-piece Welded Housing. Also, all Riser heights **C** and all **BCP** Bottom Clamp Plate thicknesses are available in #1 or #7 Steel in a Three-Piece Housing (for other steels, please specify)
9. Other features as needed (i.e. Guided Ejection, Lifting Holes, Pry Bar Slots, as well as Leader Pin, Return Pin, or Assembly Screw Relocations, etc.)
10. Method of shipment
    (For inch decimal to fractional conversion table, see page 278.)

13³/₈ x 20³/₄ A-Series Mold Bases

See opposite page for general dimensions, ejector stroke data, locating rings, sprue bushings, ejector bar lengths and other ordering information.

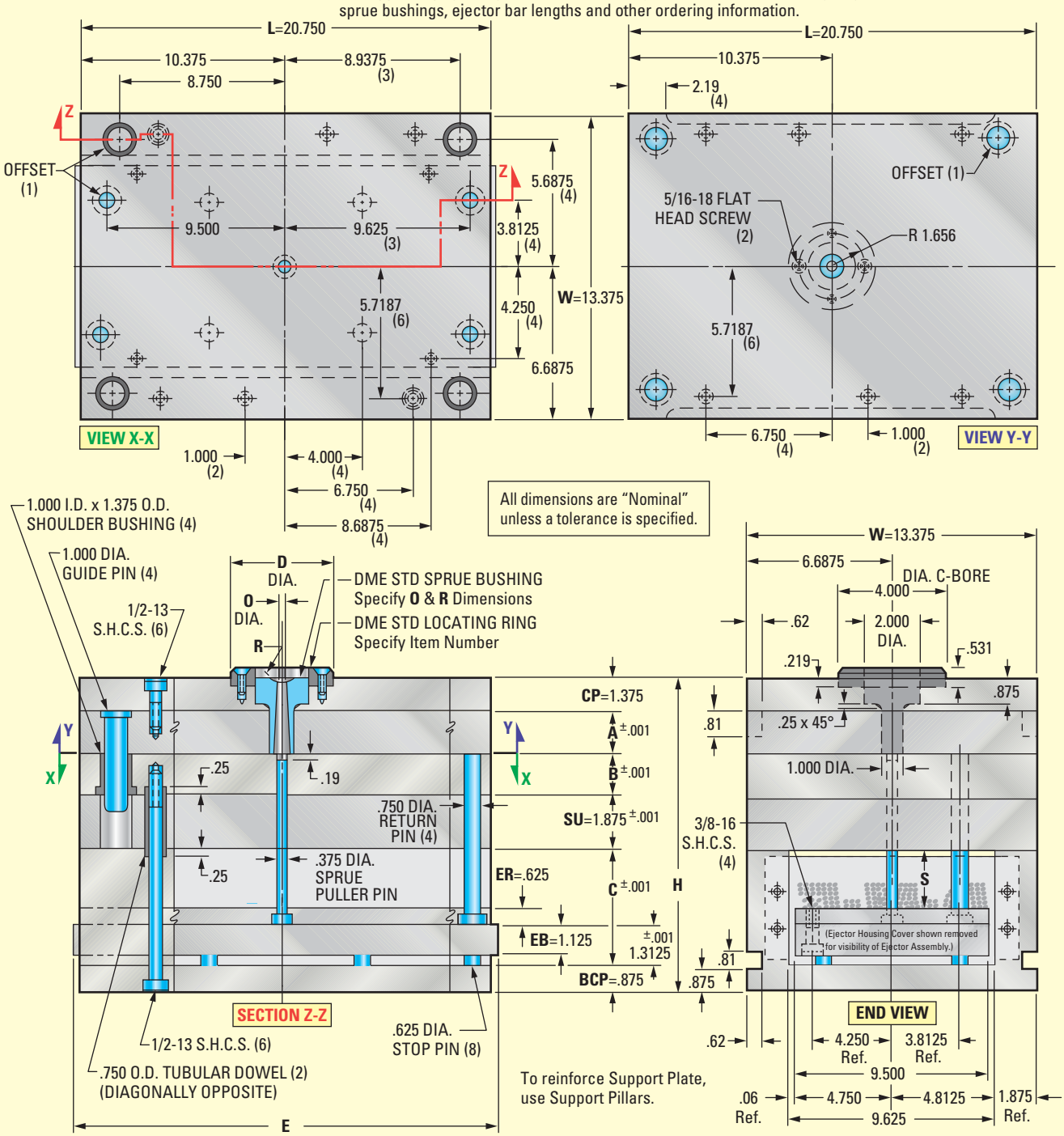

All dimensions are "Nominal" unless a tolerance is specified.

To reinforce Support Plate, use Support Pillars.

Mold Base Selections

A-Series Assembly

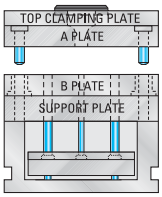

B-Series Assembly

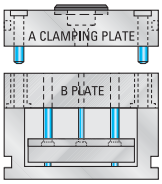

(For X-Series Stripper Plate, AX-Series and T-Series Mold Bases, see pages 173-198.)

Steel Configurations available in:

No. 1 Steel Assembly

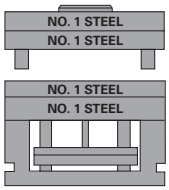

No. 2 Steel Assembly

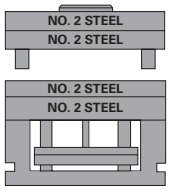

No. 3 Steel Assembly

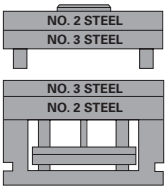

No. 7 Steel Assembly

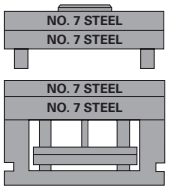

Other steel combinations also available. (Ejector Plates and Housings are No. 1 Steel, unless otherwise specified.) For additional Steel information, see page 42.

13³/₈ x 20³/₄ A-Series Mold Bases

A	B	C	H	ASSEMBLY ITEM NO.	NET WT.
.875 (7/8)	0.875	3.000	8.875	1321A-7-7	620
	1.375	3.000	9.375	1321A-7-13	660
	1.875	3.000	9.875	1321A-7-17	699
	2.375	3.500	10.875	1321A-7-23	749
	2.875	3.500	11.375	1321A-7-27	789
	3.375	4.000	12.375	1321A-7-33	839
	3.875	4.000	12.875	1321A-7-37	878
	4.875	4.500	14.375	1321A-7-47	968
	5.875	4.500	15.375	1321A-7-57	1046

A	B	C	H	ASSEMBLY ITEM NO.	NET WT.
2.375 (2-3/8)	0.875	3.000	10.375	1321A-23-7	738
	1.375	3.500	11.375	1321A-23-13	789
	1.875	3.500	11.875	1321A-23-17	828
	2.375	3.500	12.375	1321A-23-23	867
	2.875	4.000	13.375	1321A-23-27	917
	3.375	4.000	13.875	1321A-23-33	957
	3.875	4.000	14.375	1321A-23-37	996
	4.875	4.500	15.875	1321A-23-47	1086
	5.875	4.500	16.875	1321A-23-57	1164

A	B	C	H	ASSEMBLY ITEM NO.	NET WT.
3.875 (3-7/8)	0.875	3.500	12.375	1321A-37-7	867
	1.375	3.500	12.875	1321A-37-13	906
	1.875	4.000	13.875	1321A-37-17	957
	2.375	4.500	14.875	1321A-37-23	1007
	2.875	4.500	15.375	1321A-37-27	1046
	3.375	4.500	15.875	1321A-37-33	1086
	3.875	4.500	16.375	1321A-37-37	1125
	4.875	4.500	17.375	1321A-37-47	1204
	5.875	4.500	18.375	1321A-37-57	1282

A	B	C	H	ASSEMBLY ITEM NO.	NET WT.
1.375 (1-3/8)	0.875	3.000	9.375	1321A-13-7	660
	1.375	3.000	9.875	1321A-13-13	699
	1.875	3.000	10.375	1321A-13-17	738
	2.375	3.500	11.375	1321A-13-23	789
	2.875	3.500	11.875	1321A-13-27	828
	3.375	4.000	12.875	1321A-13-33	878
	3.875	4.000	13.375	1321A-13-37	917
	4.875	4.500	14.875	1321A-13-47	1007
	5.875	4.500	15.875	1321A-13-57	1086

A	B	C	H	ASSEMBLY ITEM NO.	NET WT.
2.875 (2-7/8)	0.875	3.000	10.875	1321A-27-7	777
	1.375	3.500	11.875	1321A-27-13	828
	1.875	3.500	12.375	1321A-27-17	867
	2.375	3.500	12.875	1321A-27-23	906
	2.875	4.000	13.875	1321A-27-27	957
	3.375	4.000	14.375	1321A-27-33	996
	3.875	4.000	14.875	1321A-27-37	1035
	4.875	4.500	16.375	1321A-27-47	1125
	5.875	4.500	17.375	1321A-27-57	1204

A	B	C	H	ASSEMBLY ITEM NO.	NET WT.
4.875 (4-7/8)	0.875	3.500	13.375	1321A-47-7	946
	1.375	3.500	13.875	1321A-47-13	985
	1.875	4.000	14.875	1321A-47-17	1035
	2.375	4.500	15.875	1321A-47-23	1086
	2.875	4.500	16.375	1321A-47-27	1125
	3.375	4.500	16.875	1321A-47-33	1164
	3.875	4.500	17.375	1321A-47-37	1204
	4.875	4.500	18.375	1321A-47-47	1282
	5.875	4.500	19.375	1321A-47-57	1361

A	B	C	H	ASSEMBLY ITEM NO.	NET WT.
1.875 (1-7/8)	0.875	3.000	9.875	1321A-17-7	699
	1.375	3.000	10.375	1321A-17-13	738
	1.875	3.000	10.875	1321A-17-17	777
	2.375	3.500	11.875	1321A-17-23	828
	2.875	3.500	12.375	1321A-17-27	867
	3.375	4.000	13.375	1321A-17-33	917
	3.875	4.000	13.875	1321A-17-37	957
	4.875	4.500	15.375	1321A-17-47	1046
	5.875	4.500	16.375	1321A-17-57	1125

A	B	C	H	ASSEMBLY ITEM NO.	NET WT.
3.375 (3-3/8)	0.875	3.500	11.875	1321A-33-7	828
	1.375	3.500	12.375	1321A-33-13	867
	1.875	3.500	12.875	1321A-33-17	906
	2.375	4.000	13.875	1321A-33-23	957
	2.875	4.000	14.375	1321A-33-27	996
	3.375	4.500	15.375	1321A-33-33	1046
	3.875	4.500	15.875	1321A-33-37	1086
	4.875	4.500	16.875	1321A-33-47	1164
	5.875	4.500	17.875	1321A-33-57	1243

A	B	C	H	ASSEMBLY ITEM NO.	NET WT.
5.875 (5-7/8)	0.875	3.500	14.375	1321A-57-7	1024
	1.375	4.000	15.375	1321A-57-13	1075
	1.875	4.500	16.375	1321A-57-17	1125
	2.375	4.500	16.875	1321A-57-23	1164
	2.875	4.500	17.375	1321A-57-27	1204
	3.375	4.500	17.875	1321A-57-33	1243
	3.875	4.500	18.375	1321A-57-37	1282
	4.875	4.500	19.375	1321A-57-47	1361
	5.875	4.500	20.375	1321A-57-57	1440

Other plate thickness, riser height and ejector bar length options available

CP TOP CLAMP PLATE THICKNESS	SU SUPPORT PLATE THICKNESS	BCP BOTTOM CLAMP PLATE THICKNESS	PLATE THICKNESS NO.
0.875	0.875	0.875	7
1.375	1.375	1.375	13
1.875	1.875	1.875	17
2.375	2.375	2.375	23
2.875	2.875	2.875	27
3.375	3.375	3.375	33
3.875	3.875	3.875	37
4.875	4.875	4.875	47
5.875	5.875	5.875	57

See Items 7 & 8 below.

C RISER		
C RISER HEIGHT	RISER HEIGHT NO.	S MAX. STROKE OF EJECTOR BAR
3.000	30	1.062
3.500	35	1.562
4.000	40	2.062
4.500	45	2.562
5.000	50	3.062
5.500	55	3.562
6.000	60	4.062

See Item 8 below.

EB EJECTOR BAR	
E LENGTH NOM.	EJECTOR BAR LENGTH NO.
20.72	21
23.47	23
25.97	26
29.47	29
35.47	35

See Item 6 below.

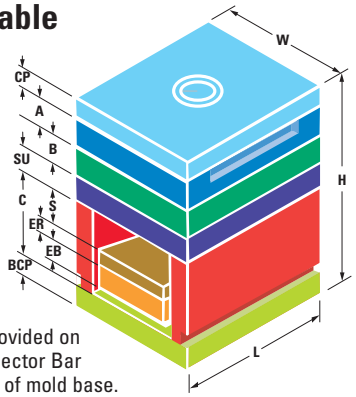

Ejector Housing Covers provided on both ends of mold when Ejector Bar Length **E** is nominal length of mold base. Customer to fabricate ejector housing covers for extended ejector bars.

WHEN ORDERING, PLEASE SPECIFY:

1. Quantity
2. Assembly Item Number (For "B" Series, replace "A" with "B")
3. Steel: #1, #2, #3 or #7 (for other steels, please specify)
4. Locating ring item number:
   Item No. 6501 (**D** = 3.990 Diameter of Locating Ring) standard
   Item No. 6504 (**D** = 3.990 Diameter of Locating Ring) clamp type
   (For other rings see DME Mold Components Catalog)
5. Type of sprue bushing, series letters: (i.e., B, etc.)
   O = Small dia. of sprue bushing orifice: .156, .218, .281 or .343
   R = Spherical radius of sprue bushing: .500 or .750
   (For sprue bushings see DME Mold Components Catalog)
6. Ejector Bar Length **E** (Ejector Bar Length at nominal length of mold base is highlighted in yellow. All other lengths provide an extended ejector bar)
7. Other **CP** Top Clamp Plate or **SU** Support Plate thicknesses as needed (Recommended thicknesses are highlighted in yellow)
8. Other **C** Riser heights as needed. Also, other **BCP** Bottom Clamp Plate thicknesses as needed. Riser height **C** and **BCP** Bottom Clamp Plate thicknesses which are highlighted in yellow are available in #1 Steel in a one-piece Welded Housing. Also, all Riser heights **C** and all **BCP** Bottom Clamp Plate thicknesses are available in #1 or #7 Steel in a Three-Piece Housing (for other steels, please specify)
9. Other features as needed (i.e. Guided Ejection, Lifting Holes, Pry Bar Slots, as well as Leader Pin, Return Pin, or Assembly Screw Relocations, etc.)
10. Method of shipment
    (For inch decimal to fractional conversion table, see page 278.)

13³/₈ x 23¹/₂ A-Series Mold Bases

See opposite page for general dimensions, ejector stroke data, locating rings, sprue bushings, ejector bar lengths and other ordering information.

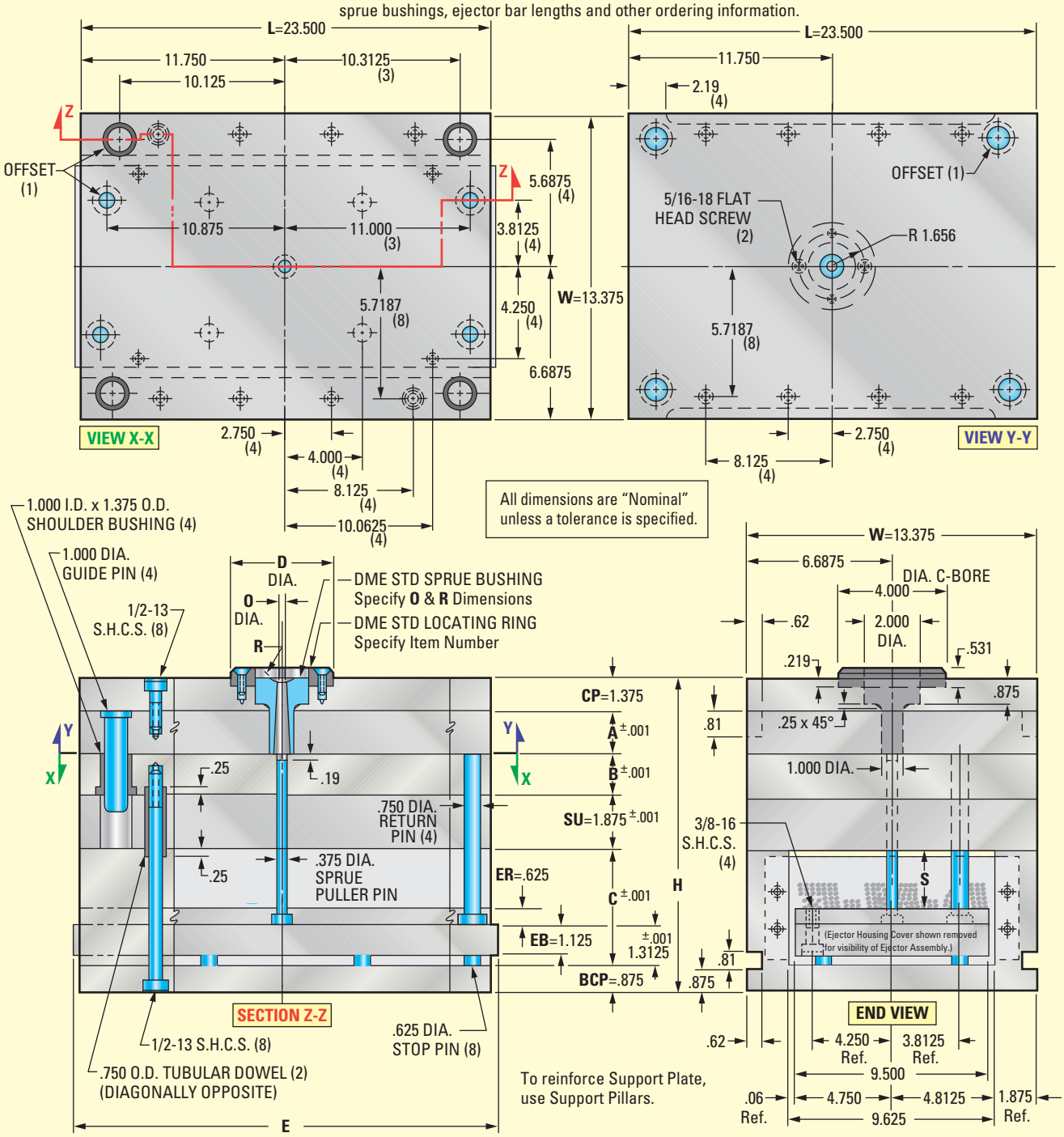

All dimensions are "Nominal" unless a tolerance is specified.

Mold Base Selections

A-Series Assembly

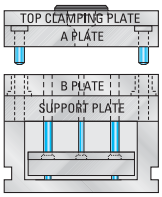

B-Series Assembly

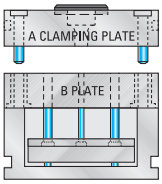

(For X-Series Stripper Plate, AX-Series and T-Series Mold Bases, see pages 173-198.)

Steel Configurations available in:

No. 1 Steel Assembly

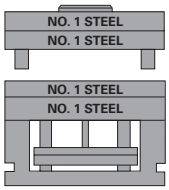

No. 2 Steel Assembly

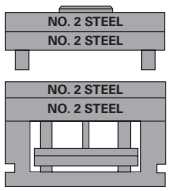

No. 3 Steel Assembly

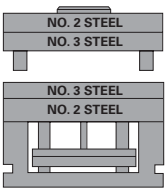

No. 7 Steel Assembly

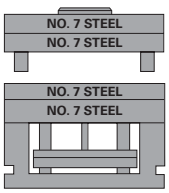

Other steel combinations also available. (Ejector Plates and Housings are No. 1 Steel, unless otherwise specified.) For additional Steel information, see page 42.

13³/₈ x 23¹/₂ A-Series Mold Bases

A	B	C	H	ASSEMBLY ITEM NO.	NET WT.
1.375 (1-3/8)	1.375	3.000	9.875	1323A-13-13	791
	1.875	3.000	10.375	1323A-13-17	836
	2.375	3.500	11.375	1323A-13-23	893
	2.875	3.500	11.875	1323A-13-27	938
	3.375	4.000	12.875	1323A-13-33	995
	3.875	4.000	13.375	1323A-13-37	1039
	4.875	4.500	14.875	1323A-13-47	1141
	5.875	4.500	15.875	1323A-13-57	1230

A	B	C	H	ASSEMBLY ITEM NO.	NET WT.
2.875 (2-7/8)	1.375	3.500	11.875	1323A-27-13	938
	1.875	3.500	12.375	1323A-27-17	982
	2.375	3.500	12.875	1323A-27-23	1027
	2.875	4.000	13.875	1323A-27-27	1084
	3.375	4.000	14.375	1323A-27-33	1128
	3.875	4.000	14.875	1323A-27-37	1173
	4.875	4.500	16.375	1323A-27-47	1274
	5.875	4.500	17.375	1323A-27-57	1363

A	B	C	H	ASSEMBLY ITEM NO.	NET WT.
4.875 (4-7/8)	1.375	3.500	13.875	1323A-47-13	1116
	1.875	4.000	14.875	1323A-47-17	1173
	2.375	4.500	15.875	1323A-47-23	1230
	2.875	4.500	16.375	1323A-47-27	1274
	3.375	4.500	16.875	1323A-47-33	1319
	3.875	4.500	17.375	1323A-47-37	1363
	4.875	4.500	18.375	1323A-47-47	1452
	5.875	4.500	19.375	1323A-47-57	1541

A	B	C	H	ASSEMBLY ITEM NO.	NET WT.
1.875 (1-7/8)	1.375	3.000	10.375	1323A-17-13	836
	1.875	3.000	10.875	1323A-17-17	881
	2.375	3.500	11.875	1323A-17-23	938
	2.875	3.500	12.375	1323A-17-27	982
	3.375	4.000	13.375	1323A-17-33	1039
	3.875	4.000	13.875	1323A-17-37	1084
	4.875	4.500	15.375	1323A-17-47	1185
	5.875	4.500	16.375	1323A-17-57	1274

A	B	C	H	ASSEMBLY ITEM NO.	NET WT.
3.375 (3-3/8)	1.375	3.500	12.375	1323A-33-13	982
	1.875	3.500	12.875	1323A-33-17	1027
	2.375	4.000	13.875	1323A-33-23	1084
	2.875	4.000	14.375	1323A-33-27	1128
	3.375	4.500	15.375	1323A-33-33	1185
	3.875	4.500	15.875	1323A-33-37	1230
	4.875	4.500	16.875	1323A-33-47	1319
	5.875	4.500	17.875	1323A-33-57	1408

A	B	C	H	ASSEMBLY ITEM NO.	NET WT.
5.875 (5-7/8)	1.375	4.000	15.375	1323A-57-13	1217
	1.875	4.500	16.375	1323A-57-17	1274
	2.375	4.500	16.875	1323A-57-23	1319
	2.875	4.500	17.375	1323A-57-27	1363
	3.375	4.500	17.875	1323A-57-33	1408
	3.875	4.500	18.375	1323A-57-37	1452
	4.875	4.500	19.375	1323A-57-47	1541
	5.875	4.500	20.375	1323A-57-57	1630

A	B	C	H	ASSEMBLY ITEM NO.	NET WT.
2.375 (2-3/8)	1.375	3.500	11.375	1323A-23-13	893
	1.875	3.500	11.875	1323A-23-17	938
	2.375	3.500	12.375	1323A-23-23	982
	2.875	4.000	13.375	1323A-23-27	1039
	3.375	4.000	13.875	1323A-23-33	1084
	3.875	4.000	14.375	1323A-23-37	1128
	4.875	4.500	15.875	1323A-23-47	1230
	5.875	4.500	16.875	1323A-23-57	1319

A	B	C	H	ASSEMBLY ITEM NO.	NET WT.
3.875 (3-7/8)	1.375	3.500	12.875	1323A-37-13	1027
	1.875	4.000	13.875	1323A-37-17	1084
	2.375	4.500	14.875	1323A-37-23	1141
	2.875	4.500	15.375	1323A-37-27	1185
	3.375	4.500	15.875	1323A-37-33	1230
	3.875	4.500	16.375	1323A-37-37	1274
	4.875	4.500	17.375	1323A-37-47	1363
	5.875	4.500	18.375	1323A-37-57	1452

Other plate thickness, riser height and ejector bar length options available

CP TOP CLAMP PLATE THICKNESS	SU SUPPORT PLATE THICKNESS	BCP BOTTOM CLAMP PLATE THICKNESS	PLATE THICKNESS NO.
0.875	0.875	0.875	7
1.375	1.375	1.375	13
1.875	1.875	1.875	17
2.375	2.375	2.375	23
2.875	2.875	2.875	27
3.375	3.375	3.375	33
3.875	3.875	3.875	37
4.875	4.875	4.875	47
5.875	5.875	5.875	57

See Items 7 & 8 below.

C RISER		
C RISER HEIGHT	RISER HEIGHT NO.	S MAX. STROKE OF EJECTOR BAR
3.000	30	1.063
3.500	35	1.563
4.000	40	2.063
4.500	45	2.563
5.000	50	3.063
5.500	55	3.563
6.000	60	4.063

See Item 8 below.

EB EJECTOR BAR	
E LENGTH NOM.	EJECTOR BAR LENGTH NO.
23.47	23
25.97	26
29.47	29
35.47	35

See Item 6 below.

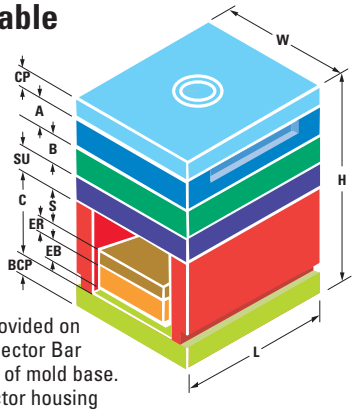

Ejector Housing Covers provided on both ends of mold when Ejector Bar Length **E** is nominal length of mold base. Customer to fabricate ejector housing covers for extended ejector bars.

WHEN ORDERING, PLEASE SPECIFY:

1. Quantity
2. Assembly Item Number (For "B" Series, replace "A" with "B")
3. Steel: #1, #2, #3 or #7 (for other steels, please specify)
4. Locating ring item number:
   Item No. 6501 (**D** = 3.990 Diameter of Locating Ring) standard
   Item No. 6504 (**D** = 3.990 Diameter of Locating Ring) clamp type
   (For other rings see DME Mold Components Catalog)
5. Type of sprue bushing, series letters: (i.e., B, etc.)
   O = Small dia. of sprue bushing orifice: .156, .218, .281 or .343
   R = Spherical radius of sprue bushing: .500 or .750
   (For sprue bushings see DME Mold Components Catalog)
6. Ejector Bar Length **E** (Ejector Bar Length at nominal length of mold base is highlighted in yellow. All other lengths provide an extended ejector bar)
7. Other **CP** Top Clamp Plate or **SU** Support Plate thicknesses as needed (Recommended thicknesses are highlighted in yellow)
8. Other **C** Riser heights as needed. Also, other **BCP** Bottom Clamp Plate thicknesses as needed. Riser height **C** and **BCP** Bottom Clamp Plate thicknesses which are highlighted in yellow are available in #1 Steel in a one-piece Welded Housing. Also, all Riser heights **C** and all **BCP** Bottom Clamp Plate thicknesses are available in #1 or #7 Steel in a Three-Piece Housing (for other steels, please specify)
9. Other features as needed (i.e. Guided Ejection, Lifting Holes, Pry Bar Slots, as well as Leader Pin, Return Pin, or Assembly Screw Relocations, etc.)
10. Method of shipment
    (For inch decimal to fractional conversion table, see page 278.)

13³/₈ x 26" A-Series Mold Bases

See opposite page for general dimensions, ejector stroke data, locating rings, sprue bushings, ejector bar lengths and other ordering information.

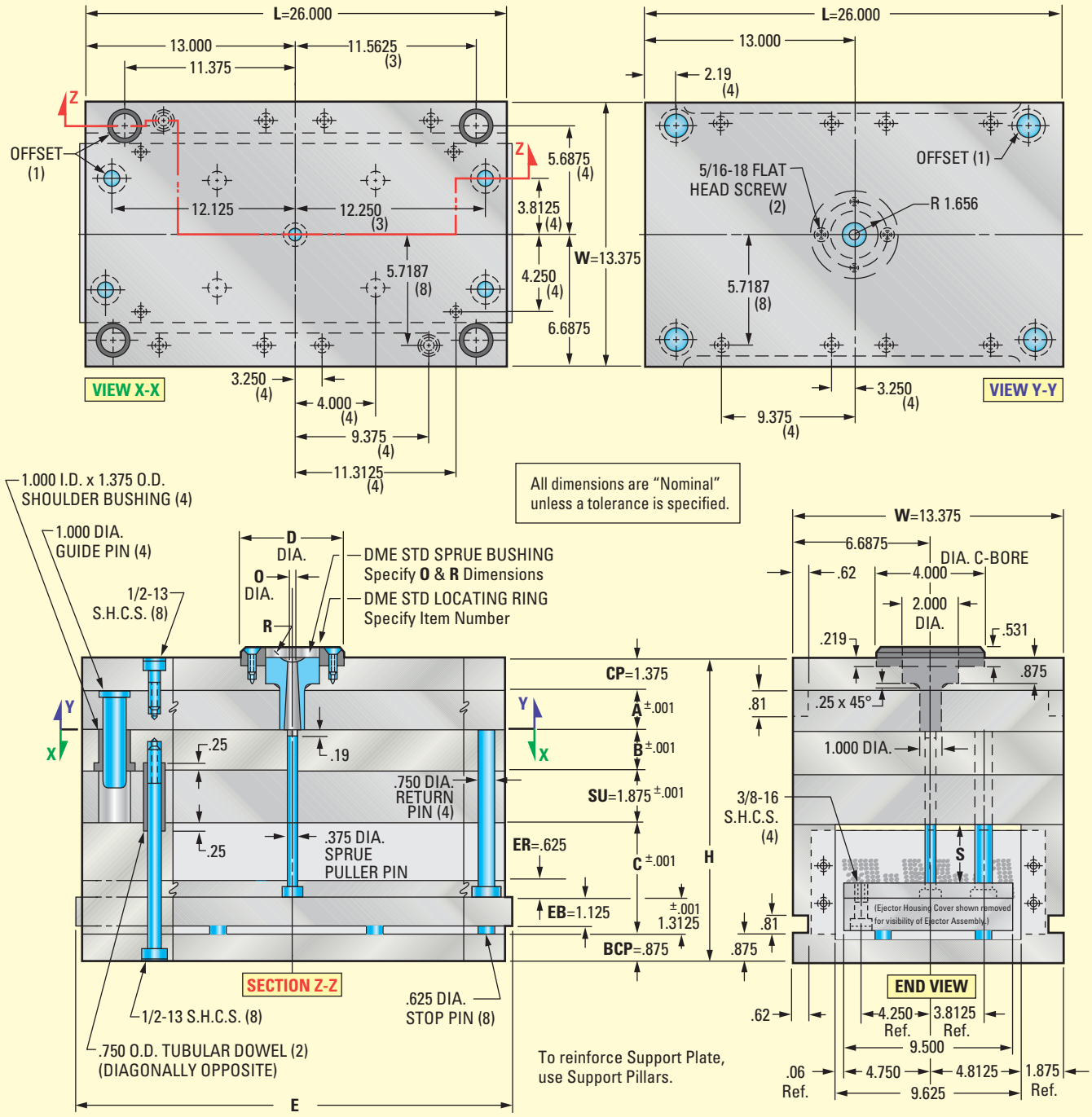

Mold Base Selections

A-Series Assembly

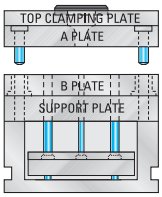

B-Series Assembly

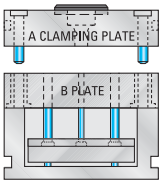

(For X-Series Stripper Plate, AX-Series and T-Series Mold Bases, see pages 173-198.)

Steel Configurations available in:

No. 1 Steel Assembly

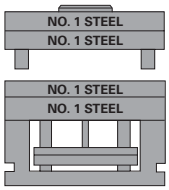

No. 2 Steel Assembly

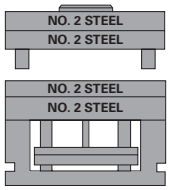

No. 3 Steel Assembly

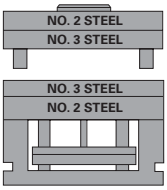

No. 7 Steel Assembly

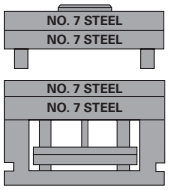

Other steel combinations also available. (Ejector Plates and Housings are No. 1 Steel, unless otherwise specified.) For additional Steel information, see page 42.

13³/₈ x 26" A-Series Mold Bases

A	B	C	H	ASSEMBLY ITEM NO.	NET WT.
1.375 (1-3/8)	1.375	3.000	9.875	1326A-13-13	876
	1.875	3.000	10.375	1326A-13-17	925
	2.375	3.500	11.375	1326A-13-23	988
	2.875	3.500	11.875	1326A-13-27	1037
	3.375	4.000	12.875	1326A-13-33	1100
	3.875	4.000	13.375	1326A-13-37	1150
	4.875	4.500	14.875	1326A-13-47	1262
	5.875	4.500	15.875	1326A-13-57	1360

A	B	C	H	ASSEMBLY ITEM NO.	NET WT.
2.875 (2-7/8)	1.375	3.500	11.875	1326A-27-13	1037
	1.875	3.500	12.375	1326A-27-17	1086
	2.375	3.500	12.875	1326A-27-23	1136
	2.875	4.000	13.875	1326A-27-27	1199
	3.375	4.000	14.375	1326A-27-33	1248
	3.875	4.000	14.875	1326A-27-37	1297
	4.875	4.500	16.375	1326A-27-47	1410
	5.875	4.500	17.375	1326A-27-57	1508

A	B	C	H	ASSEMBLY ITEM NO.	NET WT.
4.875 (4-7/8)	1.375	3.500	13.875	1326A-47-13	1234
	1.875	4.000	14.875	1326A-47-17	1297
	2.375	4.500	15.875	1326A-47-23	1360
	2.875	4.500	16.375	1326A-47-27	1410
	3.375	4.500	16.875	1326A-47-33	1459
	3.875	4.500	17.375	1326A-47-37	1508
	4.875	4.500	18.375	1326A-47-47	1607
	5.875	4.500	19.375	1326A-47-57	1705

A	B	C	H	ASSEMBLY ITEM NO.	NET WT.
1.875 (1-7/8)	1.375	3.000	10.375	1326A-17-13	925
	1.875	3.000	10.875	1326A-17-17	974
	2.375	3.500	11.875	1326A-17-23	1037
	2.875	3.500	12.375	1326A-17-27	1086
	3.375	4.000	13.375	1326A-17-33	1150
	3.875	4.000	13.875	1326A-17-37	1199
	4.875	4.500	15.375	1326A-17-47	1311
	5.875	4.500	16.375	1326A-17-57	1410

A	B	C	H	ASSEMBLY ITEM NO.	NET WT.
3.375 (3-3/8)	1.375	3.500	12.375	1326A-33-13	1086
	1.875	3.500	12.875	1326A-33-17	1136
	2.375	4.000	13.875	1326A-33-23	1199
	2.875	4.000	14.375	1326A-33-27	1248
	3.375	4.500	15.375	1326A-33-33	1311
	3.875	4.500	15.875	1326A-33-37	1360
	4.875	4.500	16.875	1326A-33-47	1459
	5.875	4.500	17.875	1326A-33-57	1557

A	B	C	H	ASSEMBLY ITEM NO.	NET WT.
5.875 (5-7/8)	1.375	4.000	15.375	1326A-57-13	1347
	1.875	4.500	16.375	1326A-57-17	1410
	2.375	4.500	16.875	1326A-57-23	1459
	2.875	4.500	17.375	1326A-57-27	1508
	3.375	4.500	17.875	1326A-57-33	1557
	3.875	4.500	18.375	1326A-57-37	1607
	4.875	4.500	19.375	1326A-57-47	1705
	5.875	4.500	20.375	1326A-57-57	1804

A	B	C	H	ASSEMBLY ITEM NO.	NET WT.
2.375 (2-3/8)	1.375	3.500	11.375	1326A-23-13	988
	1.875	3.500	11.875	1326A-23-17	1037
	2.375	3.500	12.375	1326A-23-23	1086
	2.875	4.000	13.375	1326A-23-27	1150
	3.375	4.000	13.875	1326A-23-33	1199
	3.875	4.000	14.375	1326A-23-37	1248
	4.875	4.500	15.875	1326A-23-47	1360
	5.875	4.500	16.875	1326A-23-57	1459

A	B	C	H	ASSEMBLY ITEM NO.	NET WT.
3.875 (3-7/8)	1.375	3.500	12.875	1326A-37-13	1136
	1.875	4.000	13.875	1326A-37-17	1199
	2.375	4.500	14.875	1326A-37-23	1262
	2.875	4.500	15.375	1326A-37-27	1311
	3.375	4.500	15.875	1326A-37-33	1360
	3.875	4.500	16.375	1326A-37-37	1410
	4.875	4.500	17.375	1326A-37-47	1508
	5.875	4.500	18.375	1326A-37-57	1607

Other plate thickness, riser height and ejector bar length options available

CP TOP CLAMP PLATE THICKNESS	SU SUPPORT PLATE THICKNESS	BCP BOTTOM CLAMP PLATE THICKNESS	PLATE THICKNESS NO.
0.875	0.875	0.875	7
1.375	1.375	1.375	13
1.875	1.875	1.875	17
2.375	2.375	2.375	23
2.875	2.875	2.875	27
3.375	3.375	3.375	33
3.875	3.875	3.875	37
4.875	4.875	4.875	47
5.875	5.875	5.875	57

See Items 7 & 8 below.

C RISER		
C RISER HEIGHT	RISER HEIGHT NO.	S MAX. STROKE OF EJECTOR BAR
3.000	30	1.063
3.500	35	1.563
4.000	40	2.063
4.500	45	2.563
5.000	50	3.063
5.500	55	3.563
6.000	60	4.063

See Item 8 below.

EB EJECTOR BAR	
E LENGTH NOM.	EJECTOR BAR LENGTH NO.
25.97	26
29.47	29
35.47	35

See Item 6 below.

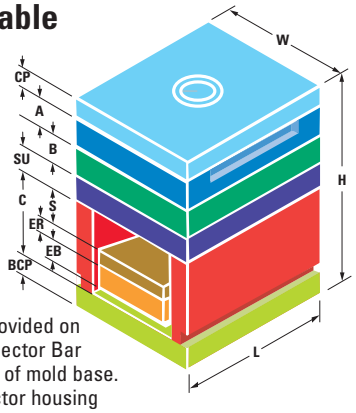

Ejector Housing Covers provided on both ends of mold when Ejector Bar Length **E** is nominal length of mold base. Customer to fabricate ejector housing covers for extended ejector bars.

WHEN ORDERING, PLEASE SPECIFY:

1. Quantity
2. Assembly Item Number (For "B" Series, replace "A" with "B")
3. Steel: #1, #2, #3 or #7 (for other steels, please specify)
4. Locating ring item number:
   Item No. 6501 (**D** = 3.990 Diameter of Locating Ring) standard
   Item No. 6504 (**D** = 3.990 Diameter of Locating Ring) clamp type
   (For other rings see DME Mold Components Catalog)
5. Type of sprue bushing, series letters: (i.e., B, etc.)
   O = Small dia. of sprue bushing orifice: .156, .218, .281 or .343
   R = Spherical radius of sprue bushing: .500 or .750
   (For sprue bushings see DME Mold Components Catalog)
6. Ejector Bar Length **E** (Ejector Bar Length at nominal length of mold base is highlighted in yellow. All other lengths provide an extended ejector bar)
7. Other **CP** Top Clamp Plate or **SU** Support Plate thicknesses as needed (Recommended thicknesses are highlighted in yellow)
8. Other **C** Riser heights as needed. Also, other **BCP** Bottom Clamp Plate thicknesses as needed. Riser height **C** and **BCP** Bottom Clamp Plate thicknesses which are highlighted in yellow are available in #1 Steel in a one-piece Welded Housing. Also, all Riser heights **C** and all **BCP** Bottom Clamp Plate thicknesses are available in #1 or #7 Steel in a Three-Piece Housing (for other steels, please specify)
9. Other features as needed (i.e. Guided Ejection, Lifting Holes, Pry Bar Slots, as well as Leader Pin, Return Pin, or Assembly Screw Relocations, etc.)
10. Method of shipment
    (For inch decimal to fractional conversion table, see page 278.)

13³/₈ x 29¹/₂ A-Series Mold Bases

See opposite page for general dimensions, ejector stroke data, locating rings, sprue bushings, ejector bar lengths and other ordering information.

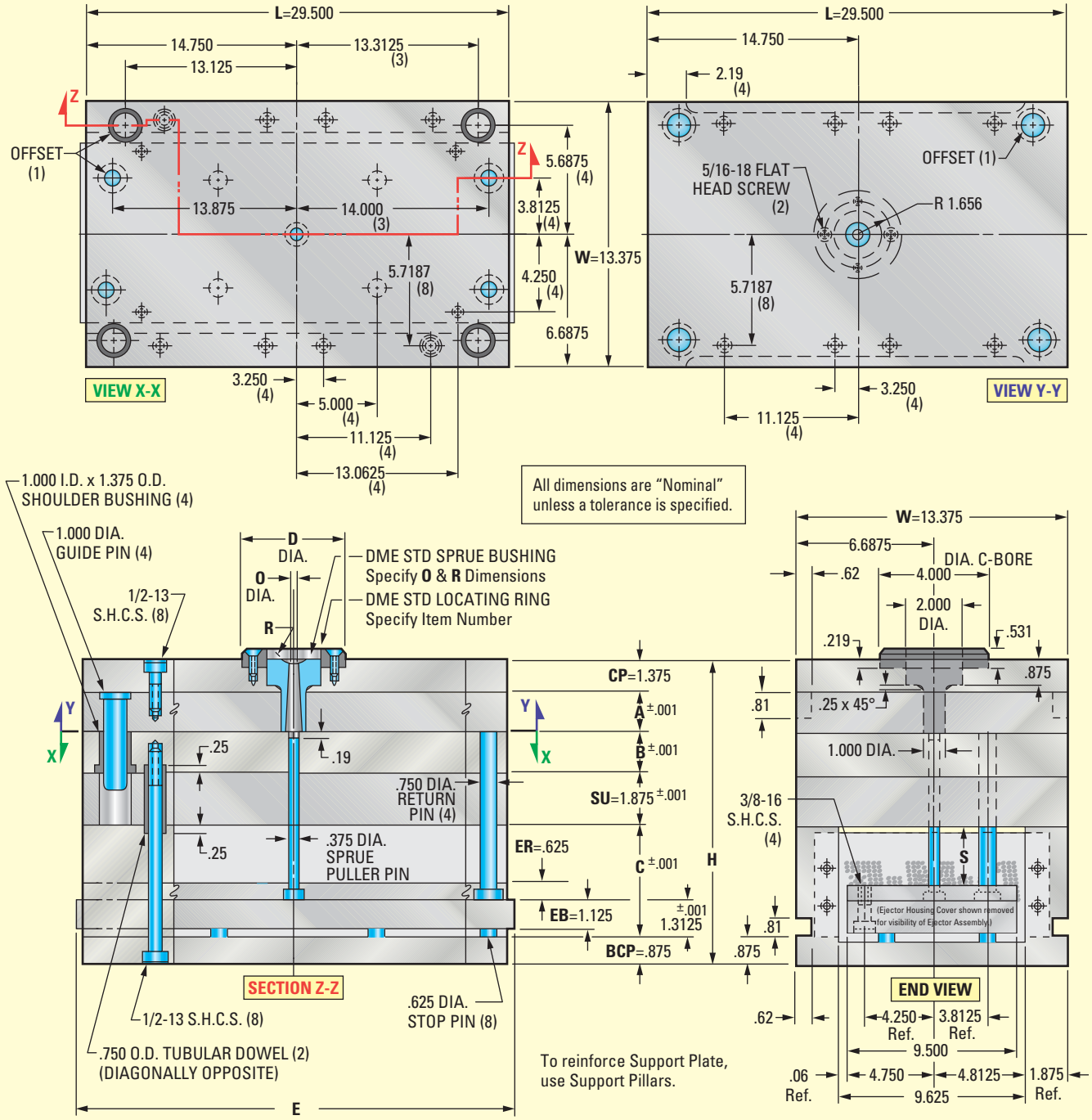

Mold Base Selections

A-Series Assembly

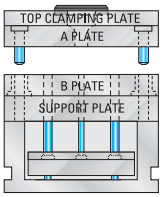

B-Series Assembly

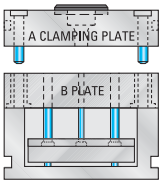

(For X-Series Stripper Plate, AX-Series and T-Series Mold Bases, see pages 173-198.)

Steel Configurations available in:

No. 1 Steel Assembly

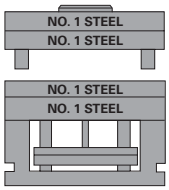

No. 2 Steel Assembly

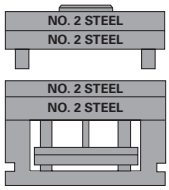

No. 3 Steel Assembly

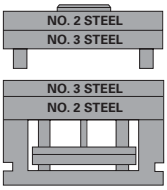

No. 7 Steel Assembly

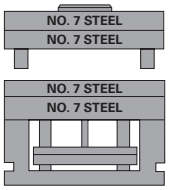

Other steel combinations also available. (Ejector Plates and Housings are No. 1 Steel, unless otherwise specified.) For additional Steel information, see page 42.

13³/₈ x 29¹/₂ A-Series Mold Bases

A	B	C	H	ASSEMBLY ITEM NO.	NET WT.
1.375 (1-3/8)	1.375	3.000	9.875	1329A-13-13	993
	1.875	3.000	10.375	1329A-13-17	1049
	2.375	3.500	11.375	1329A-13-23	1121
	2.875	3.500	11.875	1329A-13-27	1177
	3.375	4.000	12.875	1329A-13-33	1248
	3.875	4.000	13.375	1329A-13-37	1304
	4.875	4.500	14.875	1329A-13-47	1432
	5.875	4.500	15.875	1329A-13-57	1543

A	B	C	H	ASSEMBLY ITEM NO.	NET WT.
2.875 (2-7/8)	1.375	3.500	11.875	1329A-27-13	1177
	1.875	3.500	12.375	1329A-27-17	1233
	2.375	3.500	12.875	1329A-27-23	1288
	2.875	4.000	13.875	1329A-27-27	1360
	3.375	4.000	14.375	1329A-27-33	1416
	3.875	4.000	14.875	1329A-27-37	1472
	4.875	4.500	16.375	1329A-27-47	1599
	5.875	4.500	17.375	1329A-27-57	1711

A	B	C	H	ASSEMBLY ITEM NO.	NET WT.
4.875 (4-7/8)	1.375	3.500	13.875	1329A-47-13	1400
	1.875	4.000	14.875	1329A-47-17	1472
	2.375	4.500	15.875	1329A-47-23	1543
	2.875	4.500	16.375	1329A-47-27	1599
	3.375	4.500	16.875	1329A-47-33	1655
	3.875	4.500	17.375	1329A-47-37	1711
	4.875	4.500	18.375	1329A-47-47	1823
	5.875	4.500	19.375	1329A-47-57	1935

A	B	C	H	ASSEMBLY ITEM NO.	NET WT.
1.875 (1-7/8)	1.375	3.000	10.375	1329A-17-13	1049
	1.875	3.000	10.875	1329A-17-17	1105
	2.375	3.500	11.875	1329A-17-23	1177
	2.875	3.500	12.375	1329A-17-27	1233
	3.375	4.000	13.375	1329A-17-33	1304
	3.875	4.000	13.875	1329A-17-37	1360
	4.875	4.500	15.375	1329A-17-47	1488
	5.875	4.500	16.375	1329A-17-57	1599

A	B	C	H	ASSEMBLY ITEM NO.	NET WT.
3.375 (3-3/8)	1.375	3.500	12.375	1329A-33-13	1233
	1.875	3.500	12.875	1329A-33-17	1288
	2.375	4.000	13.875	1329A-33-23	1360
	2.875	4.000	14.375	1329A-33-27	1416
	3.375	4.500	15.375	1329A-33-33	1488
	3.875	4.500	15.875	1329A-33-37	1543
	4.875	4.500	16.875	1329A-33-47	1655
	5.875	4.500	17.875	1329A-33-57	1767

A	B	C	H	ASSEMBLY ITEM NO.	NET WT.
5.875 (5-7/8)	1.375	4.000	15.375	1329A-57-13	1528
	1.875	4.500	16.375	1329A-57-17	1599
	2.375	4.500	16.875	1329A-57-23	1655
	2.875	4.500	17.375	1329A-57-27	1711
	3.375	4.500	17.875	1329A-57-33	1767
	3.875	4.500	18.375	1329A-57-37	1823
	4.875	4.500	19.375	1329A-57-47	1935
	5.875	4.500	20.375	1329A-57-57	2046

A	B	C	H	ASSEMBLY ITEM NO.	NET WT.
2.375 (2-3/8)	1.375	3.500	11.375	1329A-23-13	1121
	1.875	3.500	11.875	1329A-23-17	1177
	2.375	3.500	12.375	1329A-23-23	1233
	2.875	4.000	13.375	1329A-23-27	1304
	3.375	4.000	13.875	1329A-23-33	1360
	3.875	4.000	14.375	1329A-23-37	1416
	4.875	4.500	15.875	1329A-23-47	1546
	5.875	4.500	16.875	1329A-23-57	1655

A	B	C	H	ASSEMBLY ITEM NO.	NET WT.
3.875 (3-7/8)	1.375	3.500	12.875	1329A-37-13	1288
	1.875	4.000	13.875	1329A-37-17	1360
	2.375	4.500	14.875	1329A-37-23	1432
	2.875	4.500	15.375	1329A-37-27	1488
	3.375	4.500	15.875	1329A-37-33	1543
	3.875	4.500	16.375	1329A-37-37	1599
	4.875	4.500	17.375	1329A-37-47	1711
	5.875	4.500	18.375	1329A-37-57	1823

Other plate thickness, riser height and ejector bar length options available

CP TOP CLAMP PLATE THICKNESS	SU SUPPORT PLATE THICKNESS	BCP BOTTOM CLAMP PLATE THICKNESS	PLATE THICKNESS NO.
0.875	0.875	0.875	7
1.375	1.375	1.375	13
1.875	1.875	1.875	17
2.375	2.375	2.375	23
2.875	2.875	2.875	27
3.375	3.375	3.375	33
3.875	3.875	3.875	37
4.875	4.875	4.875	47
5.875	5.875	5.875	57

See Items 7 & 8 below.

C RISER		
C RISER HEIGHT	RISER HEIGHT NO.	S MAX. STROKE OF EJECTOR BAR
3.000	30	1.063
3.500	35	1.563
4.000	40	2.063
4.500	45	2.563
5.000	50	3.063
5.500	55	3.563
6.000	60	4.063

See Item 8 below.

EB EJECTOR BAR	
E LENGTH NOM.	EJECTOR BAR LENGTH NO.
29.47	29
35.47	35

See Item 6 below.

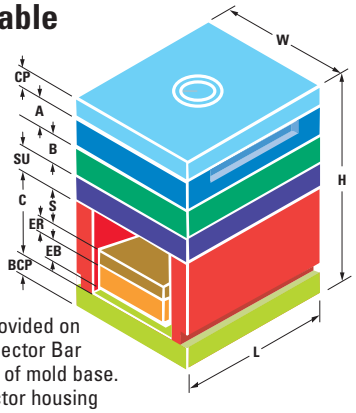

Ejector Housing Covers provided on both ends of mold when Ejector Bar Length **E** is nominal length of mold base. Customer to fabricate ejector housing covers for extended ejector bars.

WHEN ORDERING, PLEASE SPECIFY:

1. Quantity
2. Assembly Item Number (For "B" Series, replace "A" with "B")
3. Steel: #1, #2, #3 or #7 (for other steels, please specify)
4. Locating ring item number:
   Item No. 6501 (**D** = 3.990 Diameter of Locating Ring) standard
   Item No. 6504 (**D** = 3.990 Diameter of Locating Ring) clamp type
   (For other rings see DME Mold Components Catalog)
5. Type of sprue bushing, series letters: (i.e., B, etc.)
   O = Small dia. of sprue bushing orifice: .156, .218, .281 or .343
   R = Spherical radius of sprue bushing: .500 or .750
   (For sprue bushings see DME Mold Components Catalog)
6. Ejector Bar Length **E** (Ejector Bar Length at nominal length of mold base is highlighted in yellow. All other lengths provide an extended ejector bar)
7. Other **CP** Top Clamp Plate or **SU** Support Plate thicknesses as needed (Recommended thicknesses are highlighted in yellow)
8. Other **C** Riser heights as needed. Also, other **BCP** Bottom Clamp Plate thicknesses as needed. Riser height **C** and **BCP** Bottom Clamp Plate thicknesses which are highlighted in yellow are available in #1 Steel in a one-piece Welded Housing. Also, all Riser heights **C** and all **BCP** Bottom Clamp Plate thicknesses are available in #1 or #7 Steel in a Three-Piece Housing (for other steels, please specify)
9. Other features as needed (i.e. Guided Ejection, Lifting Holes, Pry Bar Slots, as well as Leader Pin, Return Pin, or Assembly Screw Relocations, etc.)
10. Method of shipment
    (For inch decimal to fractional conversion table, see page 278.)

DME A-Series Mold Bases

OVER 75 TRILLION POSSIBLE MOLD BASE CONFIGURATIONS

A-Series Mold Bases

Table of Contents

88A....52-53
812A....54-55
108A....56-57
1012A....58-59
1016A....60-61
1020A....62-63
1112A....64-65
1114A....66-67
1118A....68-69
1123A....70-71
1212A....72-73
1215A....74-75
1220A....76-77
1223A....78-79
1315A....80-81
1318A....82-83
1321A....84-85
1323A....86-87
1326A....88-89
1329A....90-91
1518A....92-93
1524A....94-95
1529A....96-97
1616A....98-99
1620A....100-101
1623A....102-103
1626A....104-105
1629A....106-107
1635A....108-109
1724A....110-111
1729A....112-113
1818A....114-115
1820A....116-117
1823A....118-119
1826A....120-121
1829A....122-123
1835A....124-125
1924A....126-127
1929A....128-129
1935A....130-131
2424A....132-133
2429A....134-135
2435A....136-137
B-Series Mold Bases....138

14 7/8 x 17 7/8 A-Series Mold Bases

See opposite page for general dimensions, ejector stroke data, locating rings, sprue bushings, ejector bar lengths and other ordering information.

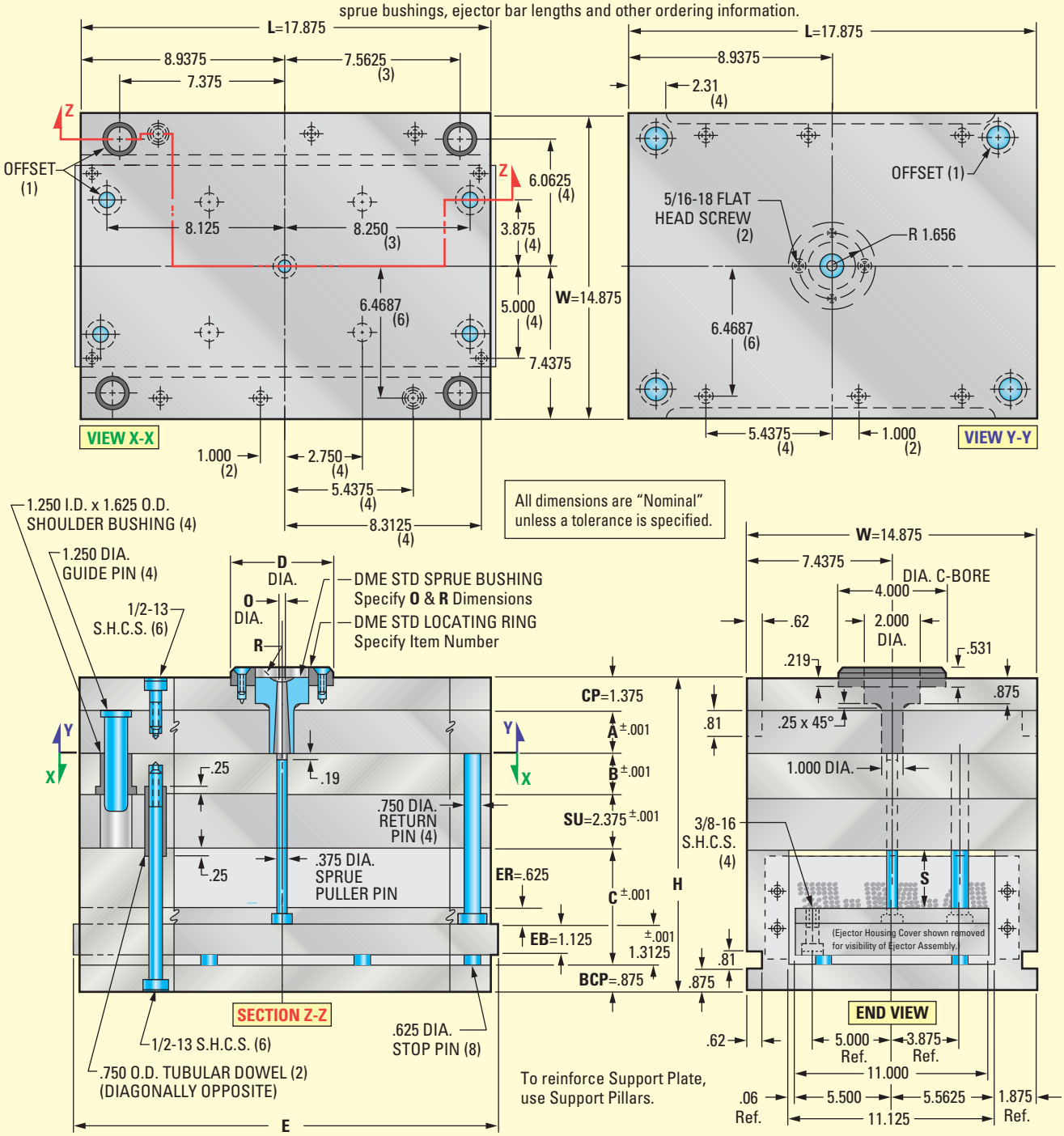

Mold Base Selections

A-Series Assembly

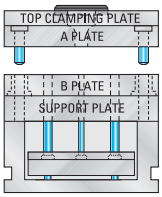

B-Series Assembly

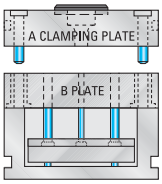

(For X-Series Stripper Plate, AX-Series and T-Series Mold Bases, see pages 173-198.)

Steel Configurations available in:

No. 1 Steel Assembly

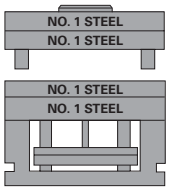

No. 2 Steel Assembly

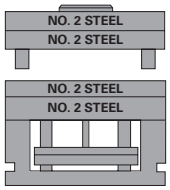

No. 3 Steel Assembly

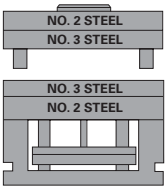

No. 7 Steel Assembly

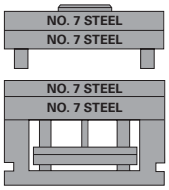

Other steel combinations also available. (Ejector Plates and Housings are No. 1 Steel, unless otherwise specified.) For additional Steel information, see page 42.

14 7/8 x 17 7/8 A-Series Mold Bases

A	B	C	H	ASSEMBLY ITEM NO.	NET WT.
.875 (7/8)	0.875	3.000	9.375	1518A-7-7	630
	1.375	3.000	9.875	1518A-7-13	668
	1.875	3.000	10.375	1518A-7-17	705
	2.375	3.500	11.375	1518A-7-23	752
	2.875	3.500	11.875	1518A-7-27	790
	3.375	4.000	12.875	1518A-7-33	837
	3.875	4.000	13.375	1518A-7-37	875
	4.875	4.500	14.875	1518A-7-47	960
	5.875	4.500	15.875	1518A-7-57	1035

A	B	C	H	ASSEMBLY ITEM NO.	NET WT.
2.375 (2-3/8)	0.875	3.000	10.875	1518A-23-7	743
	1.375	3.500	11.875	1518A-23-13	790
	1.875	3.500	12.375	1518A-23-17	828
	2.375	3.500	12.875	1518A-23-23	865
	2.875	4.000	13.875	1518A-23-27	913
	3.375	4.000	14.375	1518A-23-33	950
	3.875	4.000	14.875	1518A-23-37	988
	4.875	4.500	16.375	1518A-23-47	1073
	5.875	4.500	17.375	1518A-23-57	1148

A	B	C	H	ASSEMBLY ITEM NO.	NET WT.
3.875 (3-7/8)	0.875	3.500	12.875	1518A-37-7	865
	1.375	4.000	13.875	1518A-37-13	913
	1.875	4.000	14.375	1518A-37-17	950
	2.375	4.500	15.375	1518A-37-23	997
	2.875	4.500	15.875	1518A-37-27	1035
	3.375	4.500	16.375	1518A-37-33	1073
	3.875	4.500	16.875	1518A-37-37	1110
	4.875	4.500	17.875	1518A-37-47	1185
	5.875	4.500	18.875	1518A-37-57	1261

A	B	C	H	ASSEMBLY ITEM NO.	NET WT.
1.375 (1-3/8)	0.875	3.000	9.875	1518A-13-7	668
	1.375	3.000	10.375	1518A-13-13	705
	1.875	3.000	10.875	1518A-13-17	743
	2.375	3.500	11.875	1518A-13-23	790
	2.875	3.500	12.375	1518A-13-27	828
	3.375	4.000	13.375	1518A-13-33	875
	3.875	4.000	13.875	1518A-13-37	913
	4.875	4.500	15.375	1518A-13-47	997
	5.875	4.500	16.375	1518A-13-57	1073

A	B	C	H	ASSEMBLY ITEM NO.	NET WT.
2.875 (2-7/8)	0.875	3.000	11.375	1518A-27-7	781
	1.375	3.500	12.375	1518A-27-13	828
	1.875	3.500	12.875	1518A-27-17	865
	2.375	3.500	13.375	1518A-27-23	903
	2.875	4.000	14.375	1518A-27-27	950
	3.375	4.000	14.875	1518A-27-33	988
	3.875	4.000	15.375	1518A-27-37	1026
	4.875	4.500	16.875	1518A-27-47	1110
	5.875	4.500	17.875	1518A-27-57	1186

A	B	C	H	ASSEMBLY ITEM NO.	NET WT.
4.875 (4-7/8)	0.875	3.500	13.875	1518A-47-7	941
	1.375	4.000	14.875	1518A-47-13	988
	1.875	4.000	15.375	1518A-47-17	1026
	2.375	4.500	16.375	1518A-47-23	1073
	2.875	4.500	16.875	1518A-47-27	1110
	3.375	4.500	17.375	1518A-47-33	1148
	3.875	4.500	17.875	1518A-47-37	1186
	4.875	4.500	18.875	1518A-47-47	1261
	5.875	4.500	19.875	1518A-47-57	1336

A	B	C	H	ASSEMBLY ITEM NO.	NET WT.
1.875 (1-7/8)	0.875	3.000	10.375	1518A-17-7	705
	1.375	3.000	10.875	1518A-17-13	743
	1.875	3.500	11.875	1518A-17-17	790
	2.375	3.500	12.375	1518A-17-23	828
	2.875	4.000	13.375	1518A-17-27	875
	3.375	4.000	13.875	1518A-17-33	913
	3.875	4.000	14.375	1518A-17-37	950
	4.875	4.500	15.875	1518A-17-47	1035
	5.875	4.500	16.875	1518A-17-57	1110

A	B	C	H	ASSEMBLY ITEM NO.	NET WT.
3.375 (3-3/8)	0.875	3.500	12.375	1518A-33-7	828
	1.375	4.000	13.375	1518A-33-13	875
	1.875	4.000	13.875	1518A-33-17	913
	2.375	4.000	14.375	1518A-33-23	950
	2.875	4.500	15.375	1518A-33-27	997
	3.375	4.500	15.875	1518A-33-33	1035
	3.875	4.500	16.375	1518A-33-37	1073
	4.875	4.500	17.375	1518A-33-47	1148
	5.875	4.500	18.375	1518A-33-57	1223

A	B	C	H	ASSEMBLY ITEM NO.	NET WT.
5.875 (5-7/8)	0.875	4.000	15.375	1518A-57-7	1026
	1.375	4.000	15.875	1518A-57-13	1063
	1.875	4.500	16.875	1518A-57-17	1110
	2.375	4.500	17.375	1518A-57-23	1148
	2.875	4.500	17.875	1518A-57-27	1186
	3.375	4.500	18.375	1518A-57-33	1223
	3.875	4.500	18.875	1518A-57-37	1261
	4.875	4.500	19.875	1518A-57-47	1336
	5.875	4.500	20.875	1518A-57-57	1412

Other plate thickness, riser height and ejector bar length options available

CP TOP CLAMP PLATE THICKNESS	SU SUPPORT PLATE THICKNESS	BCP BOTTOM CLAMP PLATE THICKNESS	PLATE THICKNESS NO.
0.875	0.875	0.875	7
1.375	1.375	1.375	13
1.875	1.875	1.875	17
2.375	2.375	2.375	23
2.875	2.875	2.875	27
3.375	3.375	3.375	33
3.875	3.875	3.875	37
4.875	4.875	4.875	47
5.875	5.875	5.875	57

See Items 7 & 8 below.

C RISER		
C RISER HEIGHT	RISER HEIGHT NO.	S MAX. STROKE OF EJECTOR BAR
3.000	30	1.063
3.500	35	1.563
4.000	40	2.063
4.500	45	2.563
5.000	50	3.063
5.500	55	3.563
6.000	60	4.063

See Item 8 below.

EB EJECTOR BAR	
E LENGTH NOM.	EJECTOR BAR LENGTH NO.
17.85	18
23.72	23
29.47	29
35.47	35

See Item 6 below.

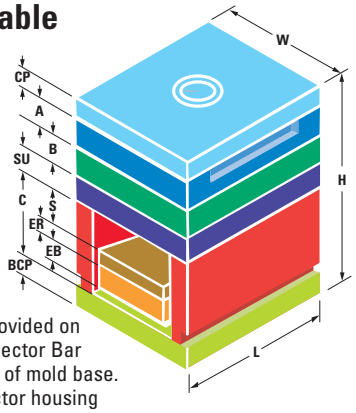

Ejector Housing Covers provided on both ends of mold when Ejector Bar Length **E** is nominal length of mold base. Customer to fabricate ejector housing covers for extended ejector bars.

WHEN ORDERING, PLEASE SPECIFY:

1. Quantity
2. Assembly Item Number (For "B" Series, replace "A" with "B")
3. Steel: #1, #2, #3 or #7 (for other steels, please specify)
4. Locating ring item number:
   Item No. 6501 (**D** = 3.990 Diameter of Locating Ring) standard
   Item No. 6504 (**D** = 3.990 Diameter of Locating Ring) clamp type
   (For other rings see DME Mold Components Catalog)
5. Type of sprue bushing, series letters: (i.e., B, etc.)
   O = Small dia. of sprue bushing orifice: .156, .218, .281 or .343
   R = Spherical radius of sprue bushing: .500 or .750
   (For sprue bushings see DME Mold Components Catalog)
6. Ejector Bar Length **E** (Ejector Bar Length at nominal length of mold base is highlighted in yellow. All other lengths provide an extended ejector bar)
7. Other **CP** Top Clamp Plate or **SU** Support Plate thicknesses as needed (Recommended thicknesses are highlighted in yellow)
8. Other **C** Riser heights as needed. Also, other **BCP** Bottom Clamp Plate thicknesses as needed. Riser height **C** and **BCP** Bottom Clamp Plate thicknesses which are highlighted in yellow are available in #1 Steel in a one-piece Welded Housing. Also, all Riser heights **C** and all **BCP** Bottom Clamp Plate thicknesses are available in #1 or #7 Steel in a Three-Piece Housing (for other steels, please specify)
9. Other features as needed (i.e. Guided Ejection, Lifting Holes, Pry Bar Slots, as well as Leader Pin, Return Pin, or Assembly Screw Relocations, etc.)
10. Method of shipment
    (For inch decimal to fractional conversion table, see page 278.)

14⁷/₈ x 23³/₄ A-Series Mold Bases

See opposite page for general dimensions, ejector stroke data, locating rings, sprue bushings, ejector bar lengths and other ordering information.

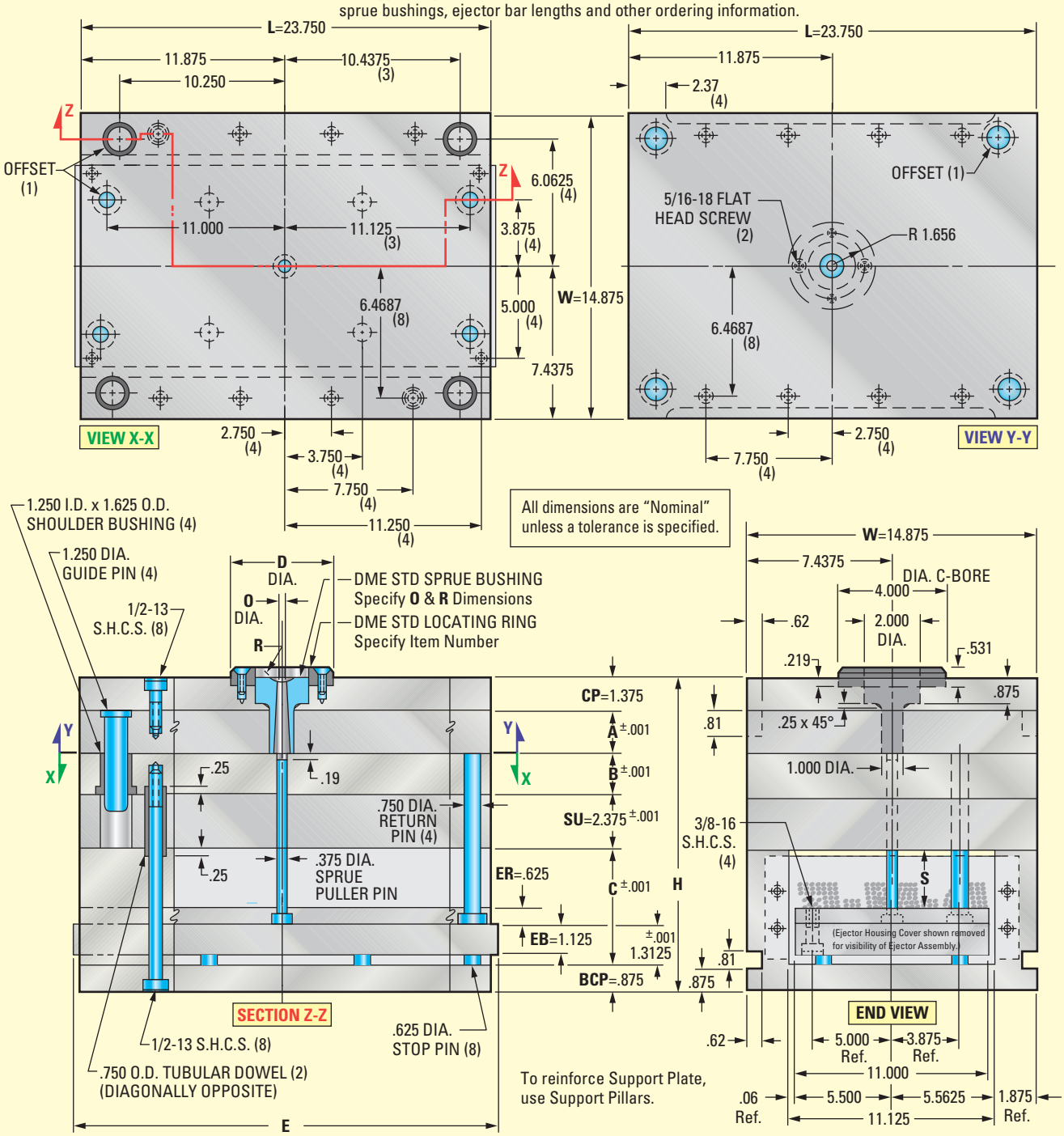

Mold Base Selections

A-Series Assembly

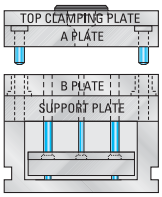

B-Series Assembly

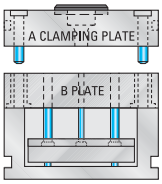

(For X-Series Stripper Plate, AX-Series and T-Series Mold Bases, see pages 173-198.)

Steel Configurations available in:

No. 1 Steel Assembly

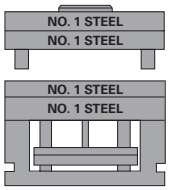

No. 2 Steel Assembly

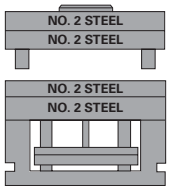

No. 3 Steel Assembly

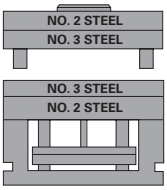

No. 7 Steel Assembly

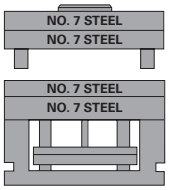

Other steel combinations also available. (Ejector Plates and Housings are No. 1 Steel, unless otherwise specified.) For additional Steel information, see page 42.

14⁷/₈ x 23³/₄ A-Series Mold Bases

A	B	C	H	ASSEMBLY ITEM NO.	NET WT.
1.375 (1-3/8)	1.375	3.000	10.375	1524A-13-13	937
	1.875	3.000	10.875	1524A-13-17	987
	2.375	3.500	11.875	1524A-13-23	1050
	2.875	3.500	12.375	1524A-13-27	1100
	3.375	4.000	13.375	1524A-13-33	1162
	3.875	4.000	13.875	1524A-13-37	1212
	4.875	4.500	15.375	1524A-13-47	1325
	5.875	4.500	16.375	1524A-13-57	1425

A	B	C	H	ASSEMBLY ITEM NO.	NET WT.
2.875 (2-7/8)	1.375	3.500	12.375	1524A-27-13	1100
	1.875	3.500	12.875	1524A-27-17	1150
	2.375	3.500	13.375	1524A-27-23	1200
	2.875	4.000	14.375	1524A-27-27	1262
	3.375	4.000	14.875	1524A-27-33	1312
	3.875	4.000	15.375	1524A-27-37	1363
	4.875	4.500	16.875	1524A-27-47	1475
	5.875	4.500	17.875	1524A-27-57	1575

A	B	C	H	ASSEMBLY ITEM NO.	NET WT.
4.875 (4-7/8)	1.375	4.000	14.875	1524A-47-13	1312
	1.875	4.000	15.375	1524A-47-17	1363
	2.375	4.500	16.375	1524A-47-23	1425
	2.875	4.500	16.875	1524A-47-27	1475
	3.375	4.500	17.375	1524A-47-33	1525
	3.875	4.500	17.875	1524A-47-37	1575
	4.875	4.500	18.875	1524A-47-47	1675
	5.875	4.500	19.875	1524A-47-57	1775

A	B	C	H	ASSEMBLY ITEM NO.	NET WT.
1.875 (1-7/8)	1.375	3.000	10.875	1524A-17-13	987
	1.875	3.500	11.875	1524A-17-17	1050
	2.375	3.500	12.375	1524A-17-23	1100
	2.875	4.000	13.375	1524A-17-27	1162
	3.375	4.000	13.875	1524A-17-33	1212
	3.875	4.000	14.375	1524A-17-37	1262
	4.875	4.500	15.875	1524A-17-47	1375
	5.875	4.500	16.875	1524A-17-57	1475

A	B	C	H	ASSEMBLY ITEM NO.	NET WT.
3.375 (3-3/8)	1.375	4.000	13.375	1524A-33-13	1162
	1.875	4.000	13.875	1524A-33-17	1212
	2.375	4.000	14.375	1524A-33-23	1262
	2.875	4.500	15.375	1524A-33-27	1325
	3.375	4.500	15.875	1524A-33-33	1375
	3.875	4.500	16.375	1524A-33-37	1425
	4.875	4.500	17.375	1524A-33-47	1525
	5.875	4.500	18.375	1524A-33-57	1625

A	B	C	H	ASSEMBLY ITEM NO.	NET WT.
5.875 (5-7/8)	1.375	4.000	15.875	1524A-57-13	1413
	1.875	4.500	16.875	1524A-57-17	1475
	2.375	4.500	17.375	1524A-57-23	1525
	2.875	4.500	17.875	1524A-57-27	1575
	3.375	4.500	18.375	1524A-57-33	1625
	3.875	4.500	18.875	1524A-57-37	1675
	4.875	4.500	19.875	1524A-57-47	1775
	5.875	4.500	20.875	1524A-57-57	1876

A	B	C	H	ASSEMBLY ITEM NO.	NET WT.
2.375 (2-3/8)	1.375	3.500	11.875	1524A-23-13	1050
	1.875	3.500	12.375	1524A-23-17	1100
	2.375	3.500	12.875	1524A-23-23	1150
	2.875	4.000	13.875	1524A-23-27	1212
	3.375	4.000	14.375	1524A-23-33	1262
	3.875	4.000	14.875	1524A-23-37	1312
	4.875	4.500	16.375	1524A-23-47	1425
	5.875	4.500	17.375	1524A-23-57	1525

A	B	C	H	ASSEMBLY ITEM NO.	NET WT.
3.875 (3-7/8)	1.375	4.000	13.875	1524A-37-13	1212
	1.875	4.000	14.375	1524A-37-17	1262
	2.375	4.500	15.375	1524A-37-23	1325
	2.875	4.500	15.875	1524A-37-27	1375
	3.375	4.500	16.375	1524A-37-33	1425
	3.875	4.500	16.875	1524A-37-37	1475
	4.875	4.500	17.875	1524A-37-47	1575
	5.875	4.500	18.875	1524A-37-57	1675

Other plate thickness, riser height and ejector bar length options available

CP TOP CLAMP PLATE THICKNESS	SU SUPPORT PLATE THICKNESS	BCP BOTTOM CLAMP PLATE THICKNESS	PLATE THICKNESS NO.
0.875	0.875	0.875	7
1.375	1.375	1.375	13
1.875	1.875	1.875	17
2.375	2.375	2.375	23
2.875	2.875	2.875	27
3.375	3.375	3.375	33
3.875	3.875	3.875	37
4.875	4.875	4.875	47
5.875	5.875	5.875	57

See Items 7 & 8 below.

C RISER		
C RISER HEIGHT	RISER HEIGHT NO.	S MAX. STROKE OF EJECTOR BAR
3.000	30	1.063
3.500	35	1.563
4.000	40	2.063
4.500	45	2.563
5.000	50	3.063
5.500	55	3.563
6.000	60	4.063

See Item 8 below.

EB EJECTOR BAR	
E LENGTH NOM.	EJECTOR BAR LENGTH NO.
23.72	24
29.47	29
35.47	35

See Item 6 below.

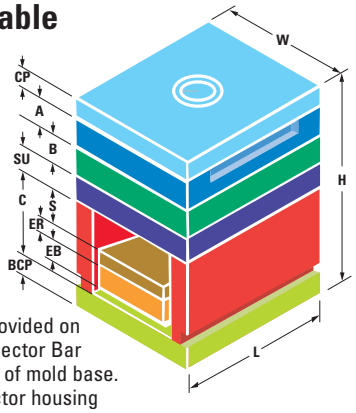

Ejector Housing Covers provided on both ends of mold when Ejector Bar Length **E** is nominal length of mold base. Customer to fabricate ejector housing covers for extended ejector bars.

WHEN ORDERING, PLEASE SPECIFY:

1. Quantity
2. Assembly Item Number (For "B" Series, replace "A" with "B")
3. Steel: #1, #2, #3 or #7 (for other steels, please specify)
4. Locating ring item number:
   Item No. 6501 (**D** = 3.990 Diameter of Locating Ring) standard
   Item No. 6504 (**D** = 3.990 Diameter of Locating Ring) clamp type
   (For other rings see DME Mold Components Catalog)
5. Type of sprue bushing, series letters: (i.e., B, etc.)
   O = Small dia. of sprue bushing orifice: .156, .218, .281 or .343
   R = Spherical radius of sprue bushing: .500 or .750
   (For sprue bushings see DME Mold Components Catalog)
6. Ejector Bar Length **E** (Ejector Bar Length at nominal length of mold base is highlighted in yellow. All other lengths provide an extended ejector bar)
7. Other **CP** Top Clamp Plate or **SU** Support Plate thicknesses as needed (Recommended thicknesses are highlighted in yellow)
8. Other **C** Riser heights as needed. Also, other **BCP** Bottom Clamp Plate thicknesses as needed. Riser height **C** and **BCP** Bottom Clamp Plate thicknesses which are highlighted in yellow are available in #1 Steel in a one-piece Welded Housing. Also, all Riser heights **C** and all **BCP** Bottom Clamp Plate thicknesses are available in #1 or #7 Steel in a Three-Piece Housing (for other steels, please specify)
9. Other features as needed (i.e. Guided Ejection, Lifting Holes, Pry Bar Slots, as well as Leader Pin, Return Pin, or Assembly Screw Relocations, etc.)
10. Method of shipment
    (For inch decimal to fractional conversion table, see page 278.)

14⁷/₈ x 29½ A-Series Mold Bases

See opposite page for general dimensions, ejector stroke data, locating rings, sprue bushings, ejector bar lengths and other ordering information.

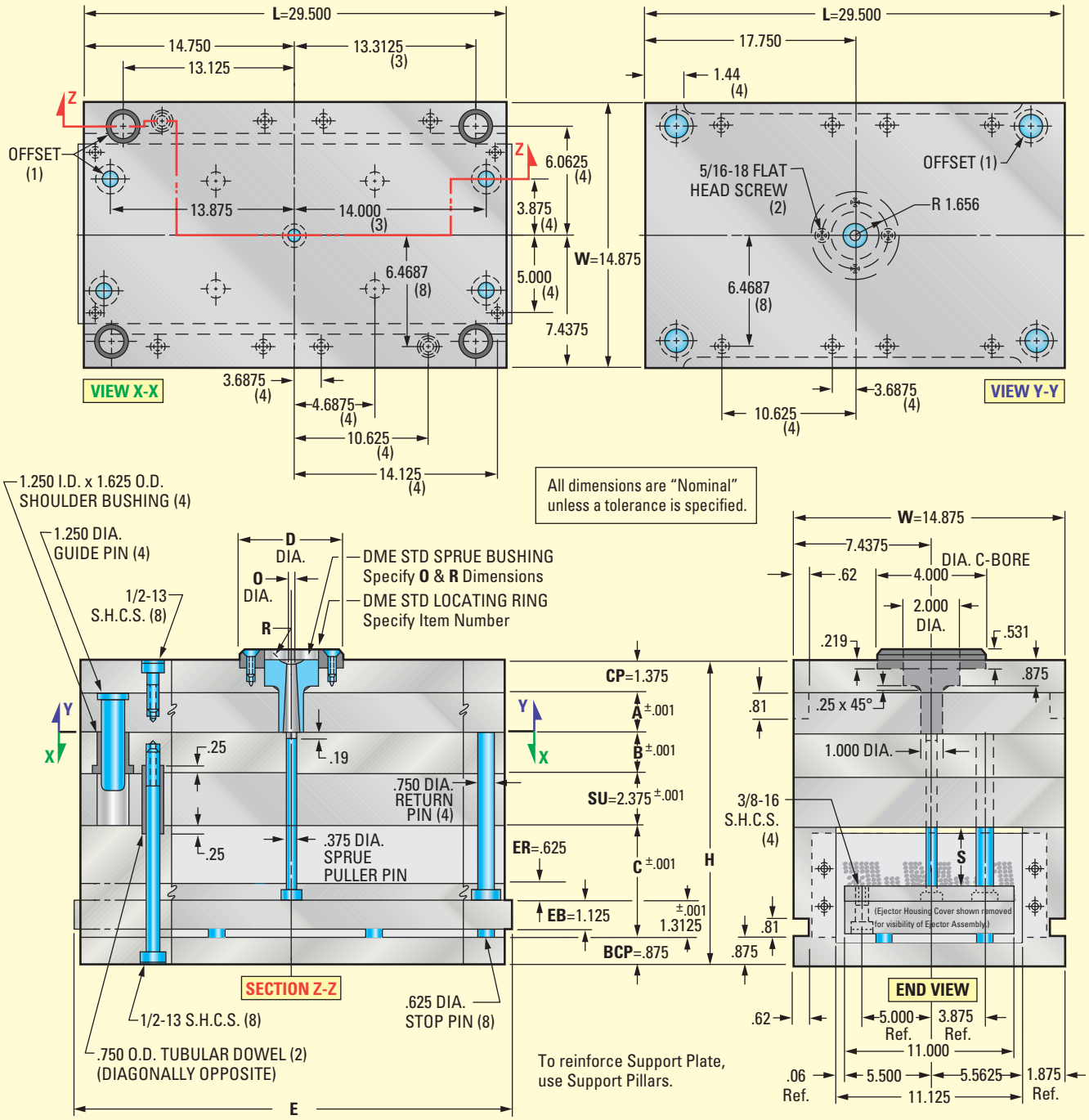

Mold Base Selections

A-Series Assembly

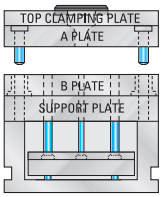

B-Series Assembly

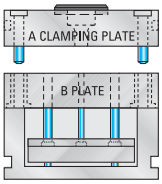

(For X-Series Stripper Plate, AX-Series and T-Series Mold Bases, see pages 173-198.)

Steel Configurations available in:

No. 1 Steel Assembly

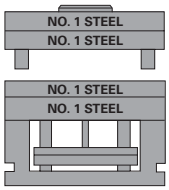

No. 2 Steel Assembly

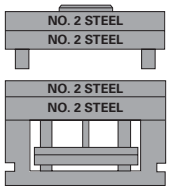

No. 3 Steel Assembly

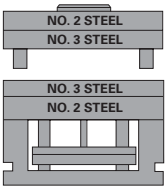

No. 7 Steel Assembly

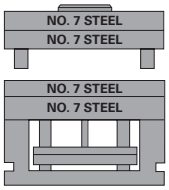

Other steel combinations also available. (Ejector Plates and Housings are No. 1 Steel, unless otherwise specified.) For additional Steel information, see page 42.

14⁷/₈ x 29¹/₂ A-Series Mold Bases

A	B	C	H	ASSEMBLY ITEM NO.	NET WT.
1.375 (1-3/8)	1.375	3.000	10.375	1529A-13-13	1164
	1.875	3.000	10.875	1529A-13-17	1226
	2.375	3.500	11.875	1529A-13-23	1304
	2.875	3.500	12.375	1529A-13-27	1366
	3.375	4.000	13.375	1529A-13-33	1444
	3.875	4.000	13.875	1529A-13-37	1506
	4.875	4.500	15.375	1529A-13-47	1646
	5.875	4.500	16.375	1529A-13-57	1770

A	B	C	H	ASSEMBLY ITEM NO.	NET WT.
2.875 (2-7/8)	1.375	3.500	12.375	1529A-27-13	1366
	1.875	3.500	12.875	1529A-27-17	1428
	2.375	3.500	13.375	1529A-27-23	1490
	2.875	4.000	14.375	1529A-27-27	1568
	3.375	4.000	14.875	1529A-27-33	1630
	3.875	4.000	15.375	1529A-27-37	1692
	4.875	4.500	16.875	1529A-27-47	1832
	5.875	4.500	17.875	1529A-27-57	1957

A	B	C	H	ASSEMBLY ITEM NO.	NET WT.
4.875 (4-7/8)	1.375	4.000	14.875	1529A-47-13	1630
	1.875	4.000	15.375	1529A-47-17	1692
	2.375	4.500	16.375	1529A-47-23	1770
	2.875	4.500	16.875	1529A-47-27	1832
	3.375	4.500	17.375	1529A-47-33	1894
	3.875	4.500	17.875	1529A-47-37	1957
	4.875	4.500	18.875	1529A-47-47	2081
	5.875	4.500	19.875	1529A-47-57	2205

A	B	C	H	ASSEMBLY ITEM NO.	NET WT.
1.875 (1-7/8)	1.375	3.000	10.875	1529A-17-13	1226
	1.875	3.500	11.875	1529A-17-17	1304
	2.375	3.500	12.375	1529A-17-23	1366
	2.875	4.000	13.375	1529A-17-27	1444
	3.375	4.000	13.875	1529A-17-33	1506
	3.875	4.000	14.375	1529A-17-37	1568
	4.875	4.500	15.875	1529A-17-47	1708
	5.875	4.500	16.875	1529A-17-57	1832

A	B	C	H	ASSEMBLY ITEM NO.	NET WT.
3.375 (3-3/8)	1.375	4.000	13.375	1529A-33-13	1444
	1.875	4.000	13.875	1529A-33-17	1506
	2.375	4.000	14.375	1529A-33-23	1568
	2.875	4.500	15.375	1529A-33-27	1646
	3.375	4.500	15.875	1529A-33-33	1708
	3.875	4.500	16.375	1529A-33-37	1770
	4.875	4.500	17.375	1529A-33-47	1894
	5.875	4.500	18.375	1529A-33-57	2019

A	B	C	H	ASSEMBLY ITEM NO.	NET WT.
5.875 (5-7/8)	1.375	4.000	15.875	1529A-57-13	1755
	1.875	4.500	16.875	1529A-57-17	1832
	2.375	4.500	17.375	1529A-57-23	1894
	2.875	4.500	17.875	1529A-57-27	1957
	3.375	4.500	18.375	1529A-57-33	2019
	3.875	4.500	18.875	1529A-57-37	2081
	4.875	4.500	19.875	1529A-57-47	2205
	5.875	4.500	20.875	1529A-57-57	2330

A	B	C	H	ASSEMBLY ITEM NO.	NET WT.
2.375 (2-3/8)	1.375	3.500	11.875	1529A-23-13	1304
	1.875	3.500	12.375	1529A-23-17	1366
	2.375	3.500	12.875	1529A-23-23	1428
	2.875	4.000	13.875	1529A-23-27	1506
	3.375	4.000	14.375	1529A-23-33	1568
	3.875	4.000	14.875	1529A-23-37	1630
	4.875	4.500	16.375	1529A-23-47	1770
	5.875	4.500	17.375	1529A-23-57	1894

A	B	C	H	ASSEMBLY ITEM NO.	NET WT.
3.875 (3-7/8)	1.375	4.000	13.875	1529A-37-13	1506
	1.875	4.000	14.375	1529A-37-17	1568
	2.375	4.500	15.375	1529A-37-23	1646
	2.875	4.500	15.875	1529A-37-27	1708
	3.375	4.500	16.375	1529A-37-33	1770
	3.875	4.500	16.875	1529A-37-37	1832
	4.875	4.500	17.875	1529A-37-47	1957
	5.875	4.500	18.875	1529A-37-57	2081

Other plate thickness, riser height and ejector bar length options available

CP TOP CLAMP PLATE THICKNESS	SU SUPPORT PLATE THICKNESS	BCP BOTTOM CLAMP PLATE THICKNESS	PLATE THICKNESS NO.
0.875	0.875	0.875	7
1.375	1.375	1.375	13
1.875	1.875	1.875	17
2.375	2.375	2.375	23
2.875	2.875	2.875	27
3.375	3.375	3.375	33
3.875	3.875	3.875	37
4.875	4.875	4.875	47
5.875	5.875	5.875	57

See Items 7 & 8 below.

C RISER		
C RISER HEIGHT	RISER HEIGHT NO.	S MAX. STROKE OF EJECTOR BAR
3.000	30	1.063
3.500	35	1.563
4.000	40	2.063
4.500	45	2.563
5.000	50	3.063
5.500	55	3.563
6.000	60	4.063

See Item 8 below.

EB EJECTOR BAR	
E LENGTH NOM.	EJECTOR BAR LENGTH NO.
29.47	29
35.47	35

See Item 6 below.

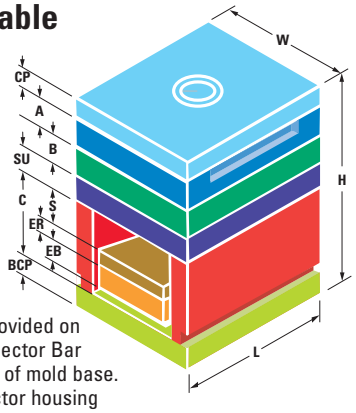

Ejector Housing Covers provided on both ends of mold when Ejector Bar Length **E** is nominal length of mold base. Customer to fabricate ejector housing covers for extended ejector bars.

WHEN ORDERING, PLEASE SPECIFY:

1. Quantity
2. Assembly Item Number (For "B" Series, replace "A" with "B")
3. Steel: #1, #2, #3 or #7 (for other steels, please specify)
4. Locating ring item number:
   Item No. 6501 (**D** = 3.990 Diameter of Locating Ring) standard
   Item No. 6504 (**D** = 3.990 Diameter of Locating Ring) clamp type
   (For other rings see DME Mold Components Catalog)
5. Type of sprue bushing, series letters: (i.e., B, etc.)
   O = Small dia. of sprue bushing orifice: .156, .218, .281 or .343
   R = Spherical radius of sprue bushing: .500 or .750
   (For sprue bushings see DME Mold Components Catalog)
6. Ejector Bar Length **E** (Ejector Bar Length at nominal length of mold base is highlighted in yellow. All other lengths provide an extended ejector bar)
7. Other **CP** Top Clamp Plate or **SU** Support Plate thicknesses as needed (Recommended thicknesses are highlighted in yellow)
8. Other **C** Riser heights as needed. Also, other **BCP** Bottom Clamp Plate thicknesses as needed. Riser height **C** and **BCP** Bottom Clamp Plate thicknesses which are highlighted in yellow are available in #1 Steel in a one-piece Welded Housing. Also, all Riser heights **C** and all **BCP** Bottom Clamp Plate thicknesses are available in #1 or #7 Steel in a Three-Piece Housing (for other steels, please specify)
9. Other features as needed (i.e. Guided Ejection, Lifting Holes, Pry Bar Slots, as well as Leader Pin, Return Pin, or Assembly Screw Relocations, etc.)
10. Method of shipment
    (For inch decimal to fractional conversion table, see page 278.)

15⁷/₈ x 16" A-Series Mold Bases

See opposite page for general dimensions, ejector stroke data, locating rings, sprue bushings, ejector bar lengths and other ordering information.

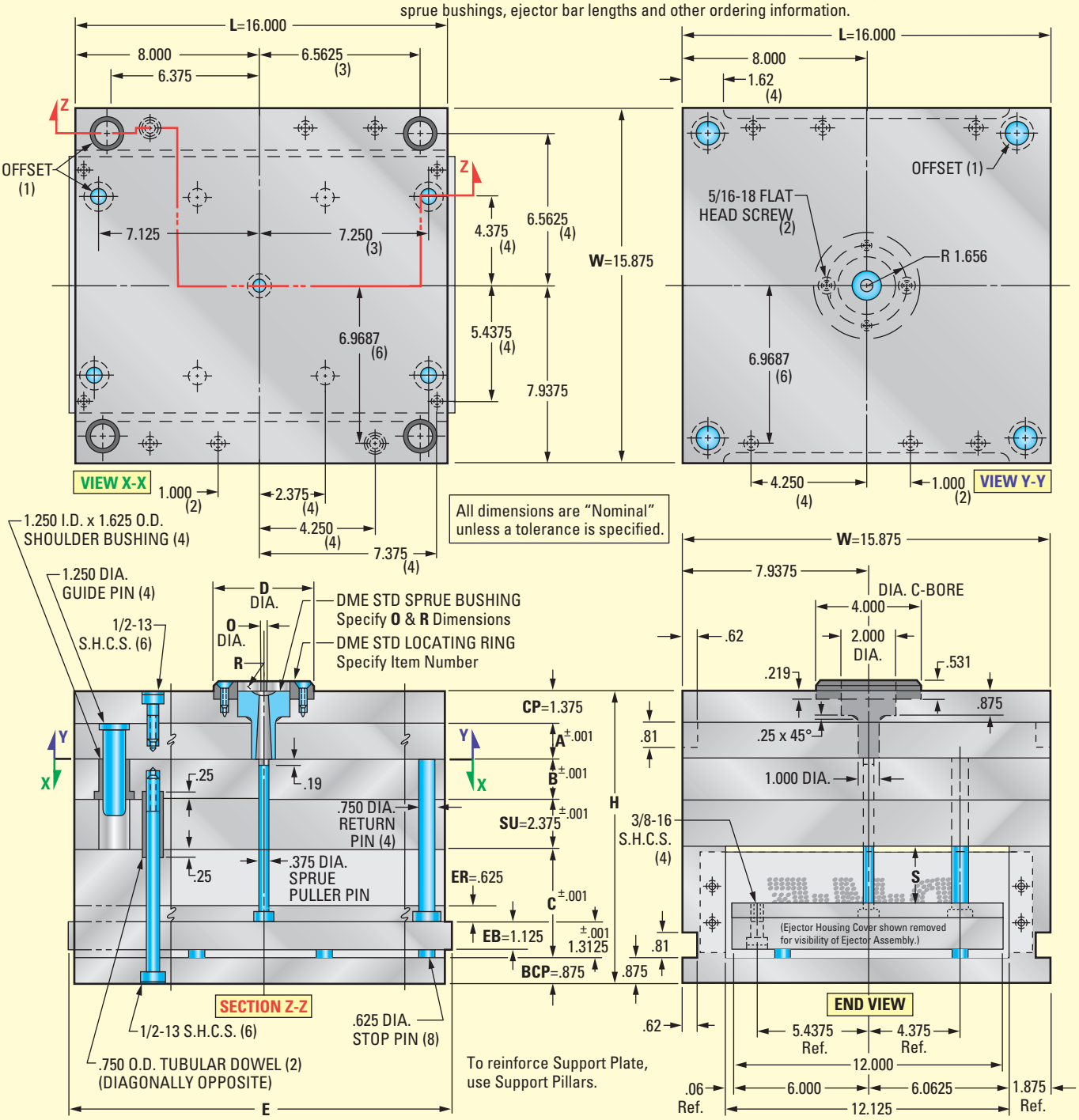

Mold Base Selections

A-Series Assembly

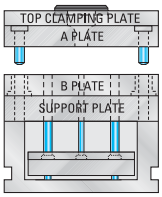

B-Series Assembly

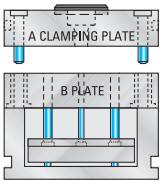

(For X-Series Stripper Plate, AX-Series and T-Series Mold Bases, see pages 173-198.)

Steel Configurations available in:

No. 1 Steel Assembly

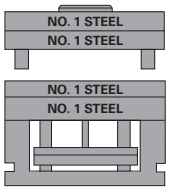

No. 2 Steel Assembly

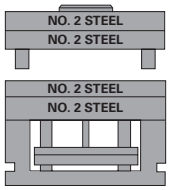

No. 3 Steel Assembly

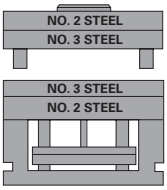

No. 7 Steel Assembly

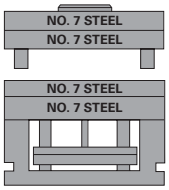

Other steel combinations also available. (Ejector Plates and Housings are No. 1 Steel, unless otherwise specified.) For additional Steel information, see page 42.

15⁷/₈ x 16" A-Series Mold Bases

A	B	C	H	ASSEMBLY ITEM NO.	NET WT.
.875 (7/8)	0.875	3.000	9.375	1616A-7-7	601
	1.375	3.000	9.875	1616A-7-13	637
	1.875	3.000	10.375	1616A-7-17	673
	2.375	3.500	11.375	1616A-7-23	717
	2.875	3.500	11.875	1616A-7-27	753
	3.375	4.000	12.875	1616A-7-33	798
	3.875	4.000	13.375	1616A-7-37	834
	4.875	4.500	14.875	1616A-7-47	914
	5.875	4.500	15.875	1616A-7-57	986

A	B	C	H	ASSEMBLY ITEM NO.	NET WT.
2.375 (2-3/8)	0.875	3.000	10.875	1616A-23-7	709
	1.375	3.500	11.875	1616A-23-13	753
	1.875	3.500	12.375	1616A-23-17	789
	2.375	3.500	12.875	1616A-23-23	825
	2.875	4.000	13.875	1616A-23-27	870
	3.375	4.000	14.375	1616A-23-33	906
	3.875	4.000	14.875	1616A-23-37	942
	4.875	4.500	16.375	1616A-23-47	1022
	5.875	4.500	17.375	1616A-23-57	1094

A	B	C	H	ASSEMBLY ITEM NO.	NET WT.
3.875 (3-7/8)	0.875	3.500	12.875	1616A-37-7	825
	1.375	4.000	13.875	1616A-37-13	870
	1.875	4.000	14.375	1616A-37-17	906
	2.375	4.500	15.375	1616A-37-23	950
	2.875	4.500	15.875	1616A-37-27	986
	3.375	4.500	16.375	1616A-37-33	1022
	3.875	4.500	16.875	1616A-37-37	1058
	4.875	4.500	17.875	1616A-37-47	1130
	5.875	4.500	18.875	1616A-37-57	1202

A	B	C	H	ASSEMBLY ITEM NO.	NET WT.
1.375 (1-3/8)	0.875	3.000	9.875	1616A-13-7	637
	1.375	3.000	10.375	1616A-13-13	673
	1.875	3.000	10.875	1616A-13-17	709
	2.375	3.500	11.875	1616A-13-23	753
	2.875	3.500	12.375	1616A-13-27	789
	3.375	4.000	13.375	1616A-13-33	834
	3.875	4.000	13.875	1616A-13-37	870
	4.875	4.500	15.375	1616A-13-47	950
	5.875	4.500	16.375	1616A-13-57	1022

A	B	C	H	ASSEMBLY ITEM NO.	NET WT.
2.875 (2-7/8)	0.875	3.000	11.375	1616A-27-7	745
	1.375	3.500	12.375	1616A-27-13	789
	1.875	3.500	12.875	1616A-27-17	825
	2.375	3.500	13.375	1616A-27-23	861
	2.875	4.000	14.375	1616A-27-27	906
	3.375	4.000	14.875	1616A-27-33	942
	3.875	4.000	15.375	1616A-27-37	978
	4.875	4.500	16.875	1616A-27-47	1058
	5.875	4.500	17.875	1616A-27-57	1130

A	B	C	H	ASSEMBLY ITEM NO.	NET WT.
4.875 (4-7/8)	0.875	3.500	13.875	1616A-47-7	897
	1.375	4.000	14.875	1616A-47-13	942
	1.875	4.000	15.375	1616A-47-17	978
	2.375	4.500	16.375	1616A-47-23	1022
	2.875	4.500	16.875	1616A-47-27	1058
	3.375	4.500	17.375	1616A-47-33	1094
	3.875	4.500	17.875	1616A-47-37	1130
	4.875	4.500	18.875	1616A-47-47	1202
	5.875	4.500	19.875	1616A-47-57	1274

A	B	C	H	ASSEMBLY ITEM NO.	NET WT.
1.875 (1-7/8)	0.875	3.000	10.375	1616A-17-7	673
	1.375	3.000	10.875	1616A-17-13	709
	1.875	3.500	11.875	1616A-17-17	753
	2.375	3.500	12.375	1616A-17-23	789
	2.875	4.000	13.375	1616A-17-27	834
	3.375	4.000	13.875	1616A-17-33	870
	3.875	4.000	14.375	1616A-17-37	906
	4.875	4.500	15.875	1616A-17-47	986
	5.875	4.500	16.875	1616A-17-57	1058

A	B	C	H	ASSEMBLY ITEM NO.	NET WT.
3.375 (3-3/8)	0.875	3.500	12.375	1616A-33-7	789
	1.375	4.000	13.375	1616A-33-13	834
	1.875	4.000	13.875	1616A-33-17	870
	2.375	4.000	14.375	1616A-33-23	906
	2.875	4.500	15.375	1616A-33-27	950
	3.375	4.500	15.875	1616A-33-33	986
	3.875	4.500	16.375	1616A-33-37	1022
	4.875	4.500	17.375	1616A-33-47	1094
	5.875	4.500	18.375	1616A-33-57	1166

A	B	C	H	ASSEMBLY ITEM NO.	NET WT.
5.875 (5-7/8)	0.875	4.000	15.375	1616A-57-7	978
	1.375	4.000	15.875	1616A-57-13	1014
	1.875	4.500	16.875	1616A-57-17	1058
	2.375	4.500	17.375	1616A-57-23	1094
	2.875	4.500	17.875	1616A-57-27	1130
	3.375	4.500	18.375	1616A-57-33	1166
	3.875	4.500	18.875	1616A-57-37	1202
	4.875	4.500	19.875	1616A-57-47	1274
	5.875	4.500	20.875	1616A-57-57	1346

Other plate thickness, riser height and ejector bar length options available

CP TOP CLAMP PLATE THICKNESS	SU SUPPORT PLATE THICKNESS	BCP BOTTOM CLAMP PLATE THICKNESS	PLATE THICKNESS NO.
0.875	0.875	0.875	7
1.375	1.375	1.375	13
1.875	1.875	1.875	17
2.375	2.375	2.375	23
2.875	2.875	2.875	27
3.375	3.375	3.375	33
3.875	3.875	3.875	37
4.875	4.875	4.875	47
5.875	5.875	5.875	57

See Items 7 & 8 below.

C RISER		
C RISER HEIGHT	RISER HEIGHT NO.	S MAX. STROKE OF EJECTOR BAR
3.000	30	1.063
3.500	35	1.563
4.000	40	2.063
4.500	45	2.563
5.000	50	3.063
5.500	55	3.563
6.000	60	4.063

See Item 8 below.

EB EJECTOR BAR	
E LENGTH NOM.	EJECTOR BAR LENGTH NO.
15.97	16
19.97	20
23.47	23
25.97	26
29.47	29
35.47	35

See Item 6 below.

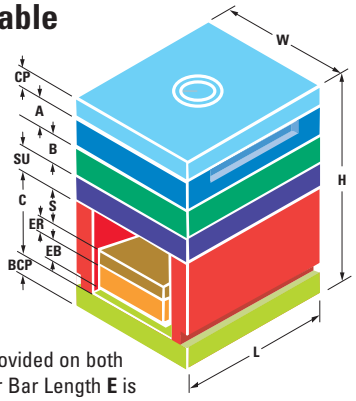

Ejector Housing Covers provided on both ends of mold when Ejector Bar Length **E** is nominal length of mold base. Customer to fabricate ejector housing covers for extended ejector bars.

WHEN ORDERING, PLEASE SPECIFY:

1. Quantity
2. Assembly Item Number (For "B" Series, replace "A" with "B")
3. Steel: #1, #2, #3 or #7 (for other steels, please specify)
4. Locating ring item number:
   Item No. 6501 (**D** = 3.990 Diameter of Locating Ring) standard
   Item No. 6504 (**D** = 3.990 Diameter of Locating Ring) clamp type
   (For other rings see DME Mold Components Catalog)
5. Type of sprue bushing, series letters: (i.e., B, etc.)
   O = Small dia. of sprue bushing orifice: .156, .218, .281 or .343
   R = Spherical radius of sprue bushing: .500 or .750
   (For sprue bushings see DME Mold Components Catalog)
6. Ejector Bar Length **E** (Ejector Bar Length at nominal length of mold base is highlighted in yellow. All other lengths provide an extended ejector bar)
7. Other **CP** Top Clamp Plate or **SU** Support Plate thicknesses as needed (Recommended thicknesses are highlighted in yellow)
8. Other **C** Riser heights as needed. Also, other **BCP** Bottom Clamp Plate thicknesses as needed. Riser height **C** and **BCP** Bottom Clamp Plate thicknesses which are highlighted in yellow are available in #1 Steel in a one-piece Welded Housing. Also, all Riser heights **C** and all **BCP** Bottom Clamp Plate thicknesses are available in #1 or #7 Steel in a Three-Piece Housing (for other steels, please specify)
9. Other features as needed (i.e. Guided Ejection, Lifting Holes, Pry Bar Slots, as well as Leader Pin, Return Pin, or Assembly Screw Relocations, etc.)
10. Method of shipment
    (For inch decimal to fractional conversion table, see page 278.)

15⁷/₈ x 20" A-Series Mold Bases

See opposite page for general dimensions, ejector stroke data, locating rings, sprue bushings, ejector bar lengths and other ordering information.

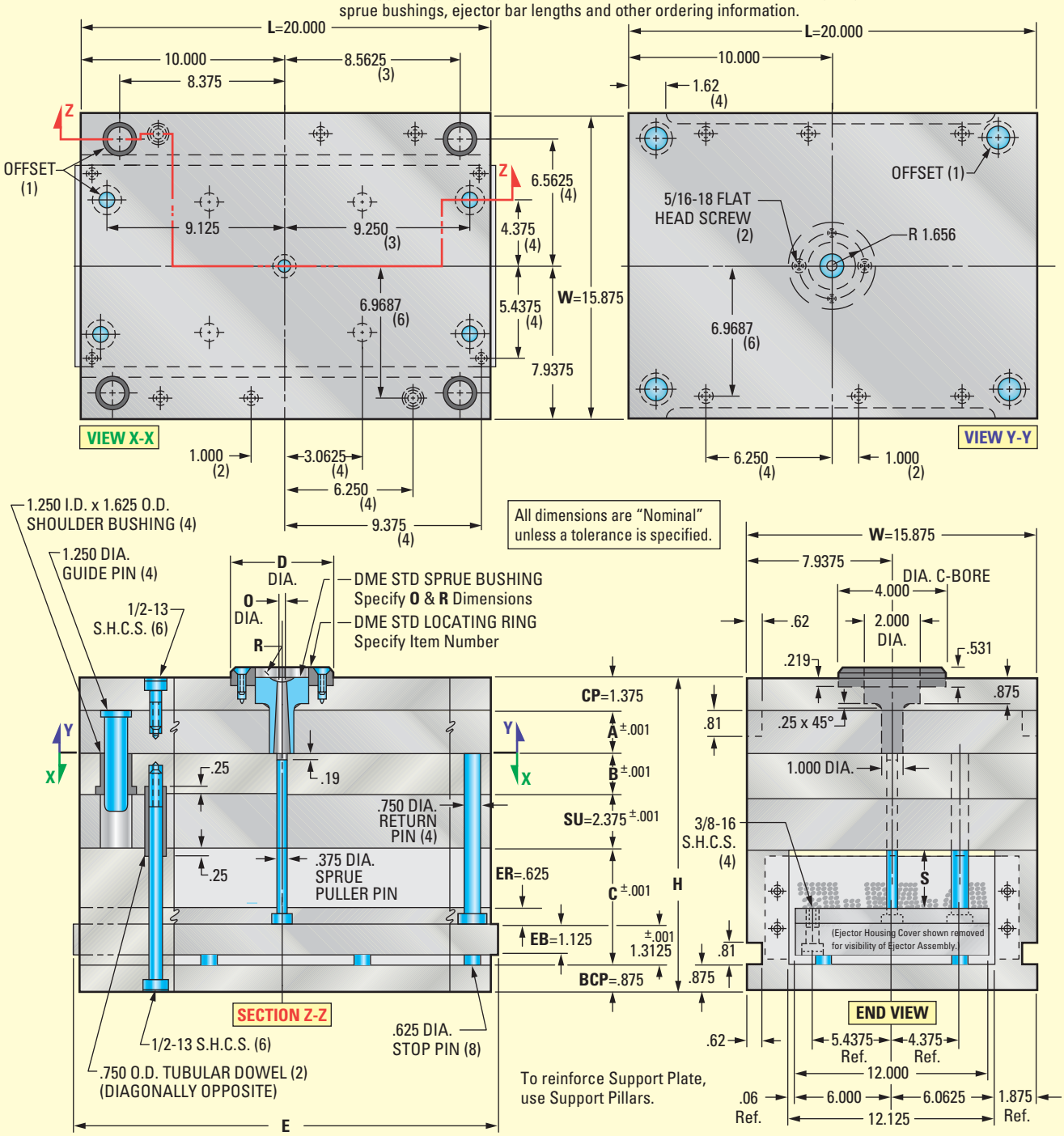

Mold Base Selections

A-Series Assembly

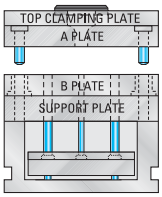

B-Series Assembly

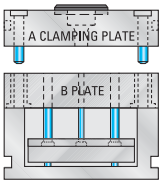

(For X-Series Stripper Plate, AX-Series and T-Series Mold Bases, see pages 173-198.)

Steel Configurations available in:

No. 1 Steel Assembly

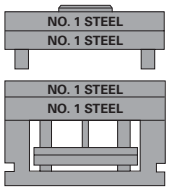

No. 2 Steel Assembly

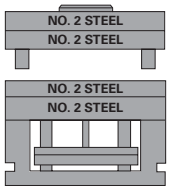

No. 3 Steel Assembly

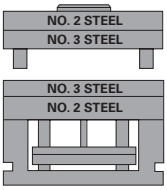

No. 7 Steel Assembly

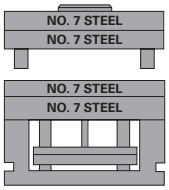

Other steel combinations also available. (Ejector Plates and Housings are No. 1 Steel, unless otherwise specified.) For additional Steel information, see page 42.

15⁷/₈ x 20" A-Series Mold Bases

A	B	C	H	ASSEMBLY ITEM NO.	NET WT.
.875 (7/8)	0.875	3.000	9.375	1620A-7-7	751
	1.375	3.000	9.875	1620A-7-13	796
	1.875	3.000	10.375	1620A-7-17	841
	2.375	3.500	11.375	1620A-7-23	896
	2.875	3.500	11.875	1620A-7-27	941
	3.375	4.000	12.875	1620A-7-33	997
	3.875	4.000	13.375	1620A-7-37	1042
	4.875	4.500	14.875	1620A-7-47	1143
	5.875	4.500	15.875	1620A-7-57	1232

A	B	C	H	ASSEMBLY ITEM NO.	NET WT.
2.375 (2-3/8)	0.875	3.000	10.875	1620A-23-7	886
	1.375	3.500	11.875	1620A-23-13	941
	1.875	3.500	12.375	1620A-23-17	986
	2.375	3.500	12.875	1620A-23-23	1031
	2.875	4.000	13.875	1620A-23-27	1087
	3.375	4.000	14.375	1620A-23-33	1132
	3.875	4.000	14.875	1620A-23-37	1177
	4.875	4.500	16.375	1620A-23-47	1277
	5.875	4.500	17.375	1620A-23-57	1367

A	B	C	H	ASSEMBLY ITEM NO.	NET WT.
3.875 (3-7/8)	0.875	3.500	12.875	1620A-37-7	1031
	1.375	4.000	13.875	1620A-37-13	1087
	1.875	4.000	14.375	1620A-37-17	1132
	2.375	4.500	15.375	1620A-37-23	1187
	2.875	4.500	15.875	1620A-37-27	1232
	3.375	4.500	16.375	1620A-37-33	1277
	3.875	4.500	16.875	1620A-37-37	1322
	4.875	4.500	17.875	1620A-37-47	1412
	5.875	4.500	18.875	1620A-37-57	1502

A	B	C	H	ASSEMBLY ITEM NO.	NET WT.
1.375 (1-3/8)	0.875	3.000	9.875	1620A-13-7	796
	1.375	3.000	10.375	1620A-13-13	841
	1.875	3.000	10.875	1620A-13-17	886
	2.375	3.500	11.875	1620A-13-23	941
	2.875	3.500	12.375	1620A-13-27	986
	3.375	4.000	13.375	1620A-13-33	1042
	3.875	4.000	13.875	1620A-13-37	1087
	4.875	4.500	15.375	1620A-13-47	1187
	5.875	4.500	16.375	1620A-13-57	1277

A	B	C	H	ASSEMBLY ITEM NO.	NET WT.
2.875 (2-7/8)	0.875	3.000	11.375	1620A-27-7	931
	1.375	3.500	12.375	1620A-27-13	986
	1.875	3.500	12.875	1620A-27-17	1031
	2.375	3.500	13.375	1620A-27-23	1076
	2.875	4.000	14.375	1620A-27-27	1132
	3.375	4.000	14.875	1620A-27-33	1177
	3.875	4.000	15.375	1620A-27-37	1222
	4.875	4.500	16.875	1620A-27-47	1322
	5.875	4.500	17.875	1620A-27-57	1412

A	B	C	H	ASSEMBLY ITEM NO.	NET WT.
4.875 (4-7/8)	0.875	3.500	13.875	1620A-47-7	1121
	1.375	4.000	14.875	1620A-47-13	1177
	1.875	4.000	15.375	1620A-47-17	1222
	2.375	4.500	16.375	1620A-47-23	1277
	2.875	4.500	16.875	1620A-47-27	1322
	3.375	4.500	17.375	1620A-47-33	1367
	3.875	4.500	17.875	1620A-47-37	1412
	4.875	4.500	18.875	1620A-47-47	1502
	5.875	4.500	19.875	1620A-47-57	1592

A	B	C	H	ASSEMBLY ITEM NO.	NET WT.
1.875 (1-7/8)	0.875	3.000	10.375	1620A-17-7	841
	1.375	3.000	10.875	1620A-17-13	886
	1.875	3.500	11.875	1620A-17-17	941
	2.375	3.500	12.375	1620A-17-23	986
	2.875	4.000	13.375	1620A-17-27	1042
	3.375	4.000	13.875	1620A-17-33	1087
	3.875	4.000	14.375	1620A-17-37	1132
	4.875	4.500	15.875	1620A-17-47	1232
	5.875	4.500	16.875	1620A-17-57	1322

A	B	C	H	ASSEMBLY ITEM NO.	NET WT.
3.375 (3-3/8)	0.875	3.500	12.375	1620A-33-7	986
	1.375	4.000	13.375	1620A-33-13	1042
	1.875	4.000	13.875	1620A-33-17	1087
	2.375	4.000	14.375	1620A-33-23	1132
	2.875	4.500	15.375	1620A-33-27	1187
	3.375	4.500	15.875	1620A-33-33	1232
	3.875	4.500	16.375	1620A-33-37	1277
	4.875	4.500	17.375	1620A-33-47	1367
	5.875	4.500	18.375	1620A-33-57	1457

A	B	C	H	ASSEMBLY ITEM NO.	NET WT.
5.875 (5-7/8)	0.875	4.000	15.375	1620A-57-7	1222
	1.375	4.000	15.875	1620A-57-13	1267
	1.875	4.500	16.875	1620A-57-17	1322
	2.375	4.500	17.375	1620A-57-23	1367
	2.875	4.500	17.875	1620A-57-27	1412
	3.375	4.500	18.375	1620A-57-33	1457
	3.875	4.500	18.875	1620A-57-37	1502
	4.875	4.500	19.875	1620A-57-47	1592
	5.875	4.500	20.875	1620A-57-57	1682

Other plate thickness, riser height and ejector bar length options available

CP TOP CLAMP PLATE THICKNESS	SU SUPPORT PLATE THICKNESS	BCP BOTTOM CLAMP PLATE THICKNESS	PLATE THICKNESS NO.
0.875	0.875	0.875	7
1.375	1.375	1.375	13
1.875	1.875	1.875	17
2.375	2.375	2.375	23
2.875	2.875	2.875	27
3.375	3.375	3.375	33
3.875	3.875	3.875	37
4.875	4.875	4.875	47
5.875	5.875	5.875	57

See Items 7 & 8 below.

C RISER		
C RISER HEIGHT	RISER HEIGHT NO.	S MAX. STROKE OF EJECTOR BAR
3.000	30	1.063
3.500	35	1.563
4.000	40	2.063
4.500	45	2.563
5.000	50	3.063
5.500	55	3.563
6.000	60	4.063

See Item 8 below.

EB EJECTOR BAR	
E LENGTH NOM.	EJECTOR BAR LENGTH NO.
19.97	20
23.47	23
25.97	26
29.47	29
35.47	35

See Item 6 below.

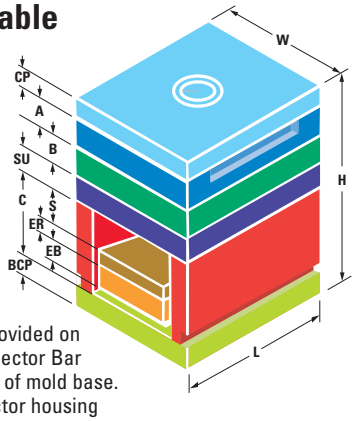

Ejector Housing Covers provided on both ends of mold when Ejector Bar Length **E** is nominal length of mold base. Customer to fabricate ejector housing covers for extended ejector bars.

WHEN ORDERING, PLEASE SPECIFY:

1. Quantity
2. Assembly Item Number (For "B" Series, replace "A" with "B")
3. Steel: #1, #2, #3 or #7 (for other steels, please specify)
4. Locating ring item number:
   Item No. 6501 (**D** = 3.990 Diameter of Locating Ring) standard
   Item No. 6504 (**D** = 3.990 Diameter of Locating Ring) clamp type
   (For other rings see DME Mold Components Catalog)
5. Type of sprue bushing, series letters: (i.e., B, etc.)
   O = Small dia. of sprue bushing orifice: .156, .218, .281 or .343
   R = Spherical radius of sprue bushing: .500 or .750
   (For sprue bushings see DME Mold Components Catalog)
6. Ejector Bar Length **E** (Ejector Bar Length at nominal length of mold base is highlighted in yellow. All other lengths provide an extended ejector bar)
7. Other **CP** Top Clamp Plate or **SU** Support Plate thicknesses as needed (Recommended thicknesses are highlighted in yellow)
8. Other **C** Riser heights as needed. Also, other **BCP** Bottom Clamp Plate thicknesses as needed. Riser height **C** and **BCP** Bottom Clamp Plate thicknesses which are highlighted in yellow are available in #1 Steel in a one-piece Welded Housing. Also, all Riser heights **C** and all **BCP** Bottom Clamp Plate thicknesses are available in #1 or #7 Steel in a Three-Piece Housing (for other steels, please specify)
9. Other features as needed (i.e. Guided Ejection, Lifting Holes, Pry Bar Slots, as well as Leader Pin, Return Pin, or Assembly Screw Relocations, etc.)
10. Method of shipment
    (For inch decimal to fractional conversion table, see page 278.)

15⁷/₈ x 23½ A-Series Mold Bases

See opposite page for general dimensions, ejector stroke data, locating rings, sprue bushings, ejector bar lengths and other ordering information.

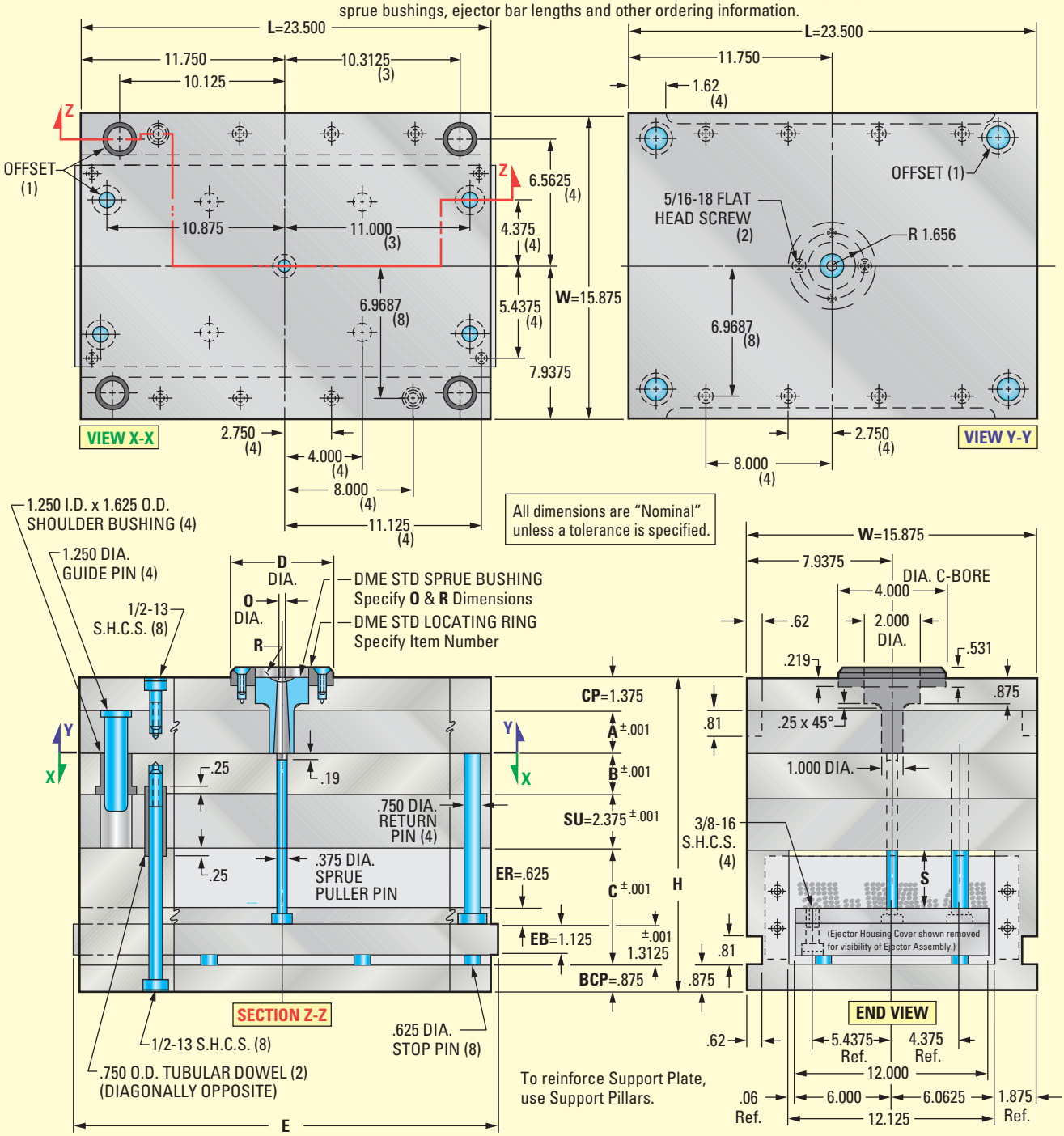

Mold Base Selections

A-Series Assembly

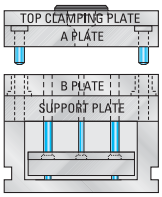

B-Series Assembly

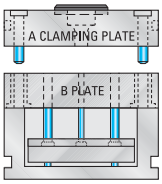

(For X-Series Stripper Plate, AX-Series and T-Series Mold Bases, see pages 173-198.)

Steel Configurations available in:

No. 1 Steel Assembly

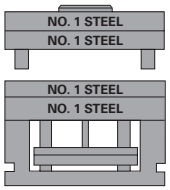

No. 2 Steel Assembly

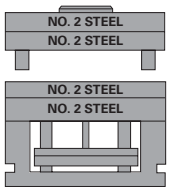

No. 3 Steel Assembly

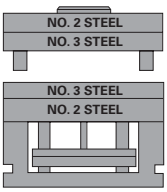

No. 7 Steel Assembly

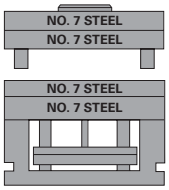

Other steel combinations also available. (Ejector Plates and Housings are No. 1 Steel, unless otherwise specified.) For additional Steel information, see page 42.

15⁷/₈ x 23¹/₂ A-Series Mold Bases

A	B	C	H	ASSEMBLY ITEM NO.	NET WT.
1.375 (1-3/8)	1.375	3.000	10.375	1623A-13-13	988
	1.875	3.000	10.875	1623A-13-17	1041
	2.375	3.500	11.875	1623A-13-23	1106
	2.875	3.500	12.375	1623A-13-27	1159
	3.375	4.000	13.375	1623A-13-33	1224
	3.875	4.000	13.875	1623A-13-37	1277
	4.875	4.500	15.375	1623A-13-47	1395
	5.875	4.500	16.375	1623A-13-57	1501

A	B	C	H	ASSEMBLY ITEM NO.	NET WT.
2.875 (2-7/8)	1.375	3.500	12.375	1623A-27-13	1159
	1.875	3.500	12.875	1623A-27-17	1212
	2.375	3.500	13.375	1623A-27-23	1265
	2.875	4.000	14.375	1623A-27-27	1330
	3.375	4.000	14.875	1623A-27-33	1383
	3.875	4.000	15.375	1623A-27-37	1436
	4.875	4.500	16.875	1623A-27-47	1554
	5.875	4.500	17.875	1623A-27-57	1659

A	B	C	H	ASSEMBLY ITEM NO.	NET WT.
4.875 (4-7/8)	1.375	4.000	14.875	1623A-47-13	1383
	1.875	4.000	15.375	1623A-47-17	1436
	2.375	4.500	16.375	1623A-47-23	1501
	2.875	4.500	16.875	1623A-47-27	1554
	3.375	4.500	17.375	1623A-47-33	1607
	3.875	4.500	17.875	1623A-47-37	1659
	4.875	4.500	18.875	1623A-47-47	1765
	5.875	4.500	19.875	1623A-47-57	1871

A	B	C	H	ASSEMBLY ITEM NO.	NET WT.
1.875 (1-7/8)	1.375	3.000	10.875	1623A-17-13	1041
	1.875	3.000	11.375	1623A-17-17	1106
	2.375	3.500	12.375	1623A-17-23	1159
	2.875	3.500	12.875	1623A-17-27	1224
	3.375	4.000	13.875	1623A-17-33	1277
	3.875	4.000	14.375	1623A-17-37	1330
	4.875	4.500	15.875	1623A-17-47	1448
	5.875	4.500	16.875	1623A-17-57	1554

A	B	C	H	ASSEMBLY ITEM NO.	NET WT.
3.375 (3-3/8)	1.375	4.000	13.375	1623A-33-13	1224
	1.875	4.000	13.875	1623A-33-17	1277
	2.375	4.000	14.375	1623A-33-23	1330
	2.875	4.500	15.375	1623A-33-27	1395
	3.375	4.500	15.875	1623A-33-33	1448
	3.875	4.500	16.375	1623A-33-37	1501
	4.875	4.500	17.375	1623A-33-47	1607
	5.875	4.500	18.375	1623A-33-57	1712

A	B	C	H	ASSEMBLY ITEM NO.	NET WT.
5.875 (5-7/8)	1.375	4.000	15.875	1623A-57-13	1488
	1.875	4.500	16.875	1623A-57-17	1554
	2.375	4.500	17.375	1623A-57-23	1607
	2.875	4.500	17.875	1623A-57-27	1659
	3.375	4.500	18.375	1623A-57-33	1712
	3.875	4.500	18.875	1623A-57-37	1765
	4.875	4.500	19.875	1623A-57-47	1871
	5.875	4.500	20.875	1623A-57-57	1976

A	B	C	H	ASSEMBLY ITEM NO.	NET WT.
2.375 (2-3/8)	1.375	3.500	11.875	1623A-23-13	1106
	1.875	3.500	12.375	1623A-23-17	1159
	2.375	3.500	12.875	1623A-23-23	1212
	2.875	4.000	13.875	1623A-23-27	1277
	3.375	4.000	14.375	1623A-23-33	1330
	3.875	4.000	14.875	1623A-23-37	1383
	4.875	4.500	16.375	1623A-23-47	1501
	5.875	4.500	17.375	1623A-23-57	1607

A	B	C	H	ASSEMBLY ITEM NO.	NET WT.
3.875 (3-7/8)	1.375	4.000	13.875	1623A-37-13	1277
	1.875	4.000	14.375	1623A-37-17	1330
	2.375	4.500	15.375	1623A-37-23	1395
	2.875	4.500	15.875	1623A-37-27	1448
	3.375	4.500	16.375	1623A-37-33	1501
	3.875	4.500	16.875	1623A-37-37	1554
	4.875	4.500	17.875	1623A-37-47	1659
	5.875	4.500	18.875	1623A-37-57	1765

Other plate thickness, riser height and ejector bar length options available

CP TOP CLAMP PLATE THICKNESS	SU SUPPORT PLATE THICKNESS	BCP BOTTOM CLAMP PLATE THICKNESS	PLATE THICKNESS NO.
0.875	0.875	0.875	7
1.375	1.375	1.375	13
1.875	1.875	1.875	17
2.375	2.375	2.375	23
2.875	2.875	2.875	27
3.375	3.375	3.375	33
3.875	3.875	3.875	37
4.875	4.875	4.875	47
5.875	5.875	5.875	57

See Items 7 & 8 below.

C RISER		
C RISER HEIGHT	RISER HEIGHT NO.	S MAX. STROKE OF EJECTOR BAR
3.000	30	1.063
3.500	35	1.563
4.000	40	2.063
4.500	45	2.563
5.000	50	3.063
5.500	55	3.563
6.000	60	4.063

See Item 8 below.

EB EJECTOR BAR	
E LENGTH NOM.	EJECTOR BAR LENGTH NO.
23.47	23
25.97	26
29.47	29
35.47	35

See Item 6 below.

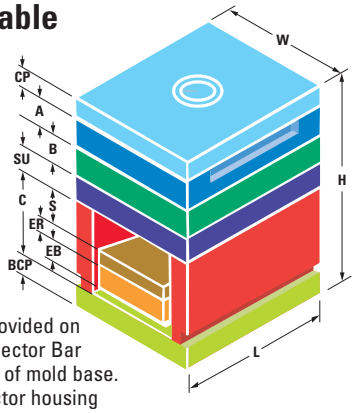

Ejector Housing Covers provided on both ends of mold when Ejector Bar Length **E** is nominal length of mold base. Customer to fabricate ejector housing covers for extended ejector bars.

WHEN ORDERING, PLEASE SPECIFY:

1. Quantity
2. Assembly Item Number (For "B" Series, replace "A" with "B")
3. Steel: #1, #2, #3 or #7 (for other steels, please specify)
4. Locating ring item number:
   Item No. 6501 (**D** = 3.990 Diameter of Locating Ring) standard
   Item No. 6504 (**D** = 3.990 Diameter of Locating Ring) clamp type
   (For other rings see DME Mold Components Catalog)
5. Type of sprue bushing, series letters: (i.e., B, etc.)
   O = Small dia. of sprue bushing orifice: .156, .218, .281 or .343
   R = Spherical radius of sprue bushing: .500 or .750
   (For sprue bushings see DME Mold Components Catalog)
6. Ejector Bar Length **E** (Ejector Bar Length at nominal length of mold base is highlighted in yellow. All other lengths provide an extended ejector bar)
7. Other **CP** Top Clamp Plate or **SU** Support Plate thicknesses as needed (Recommended thicknesses are highlighted in yellow)
8. Other **C** Riser heights as needed. Also, other **BCP** Bottom Clamp Plate thicknesses as needed. Riser height **C** and **BCP** Bottom Clamp Plate thicknesses which are highlighted in yellow are available in #1 Steel in a one-piece Welded Housing. Also, all Riser heights **C** and all **BCP** Bottom Clamp Plate thicknesses are available in #1 or #7 Steel in a Three-Piece Housing (for other steels, please specify)
9. Other features as needed (i.e. Guided Ejection, Lifting Holes, Pry Bar Slots, as well as Leader Pin, Return Pin, or Assembly Screw Relocations, etc.)
10. Method of shipment
    (For inch decimal to fractional conversion table, see page 278.)

15⁷/₈ x 26" A-Series Mold Bases

See opposite page for general dimensions, ejector stroke data, locating rings, sprue bushings, ejector bar lengths and other ordering information.

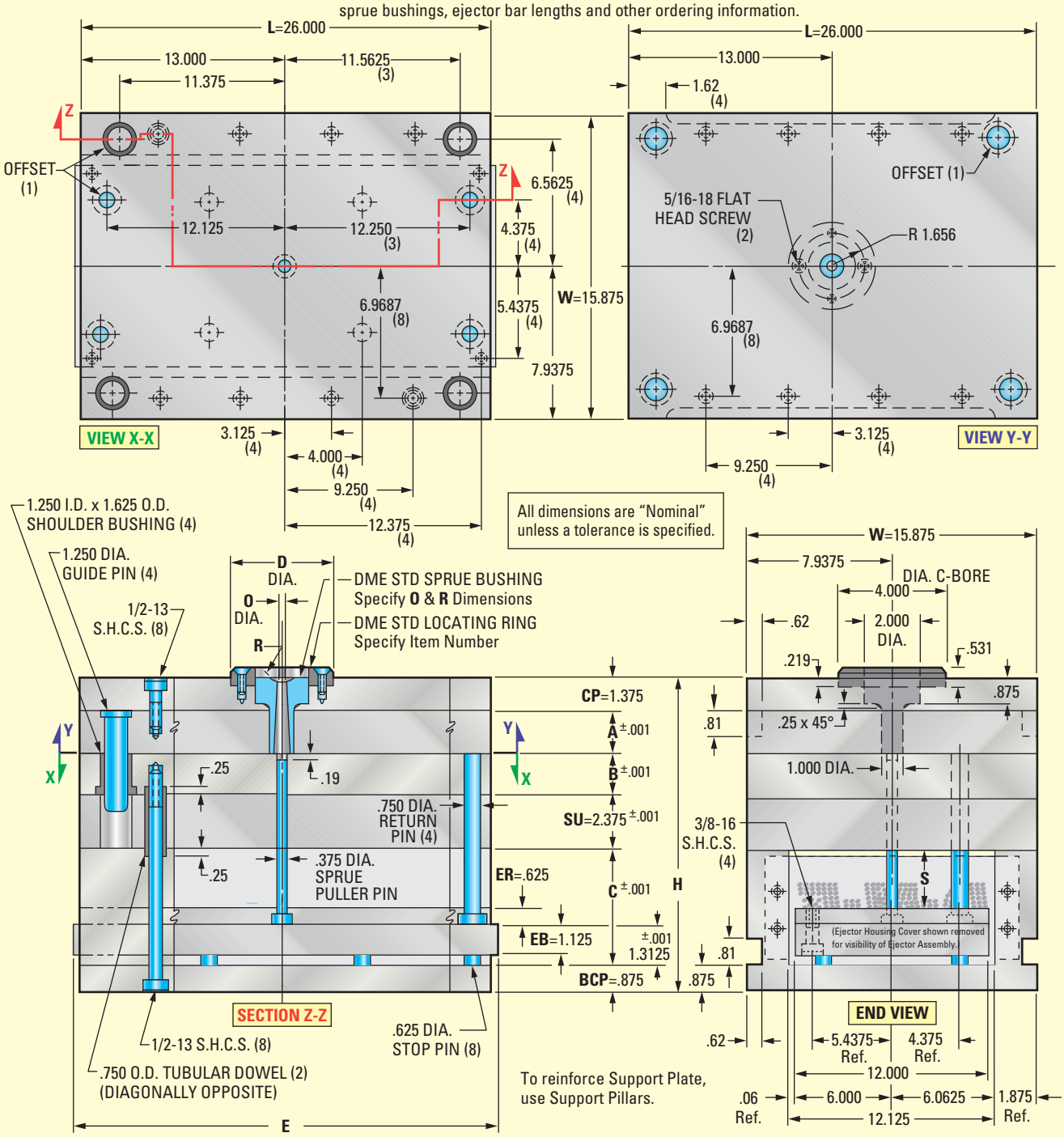

All dimensions are "Nominal" unless a tolerance is specified.

Mold Base Selections

A-Series Assembly

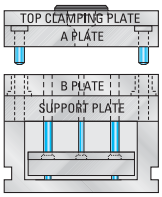

B-Series Assembly

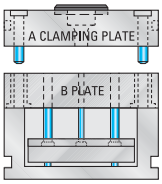

(For X-Series Stripper Plate, AX-Series and T-Series Mold Bases, see pages 173-198.)

Steel Configurations available in:

No. 1 Steel Assembly

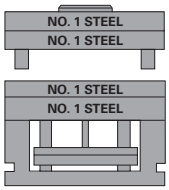

No. 2 Steel Assembly

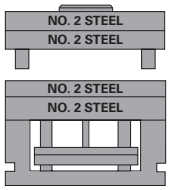

No. 3 Steel Assembly

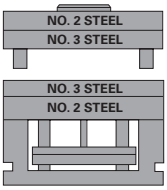

No. 7 Steel Assembly

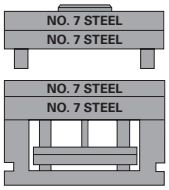

Other steel combinations also available. (Ejector Plates and Housings are No. 1 Steel, unless otherwise specified.) For additional Steel information, see page 42.

15⁷/₈ x 26" A-Series Mold Bases

A	B	C	H	ASSEMBLY ITEM NO.	NET WT.
1.375 (1-3/8)	1.375	3.000	10.375	1626A-13-13	1093
	1.875	3.000	10.875	1626A-13-17	1151
	2.375	3.500	11.875	1626A-13-23	1224
	2.875	3.500	12.375	1626A-13-27	1282
	3.375	4.000	13.375	1626A-13-33	1354
	3.875	4.000	13.875	1626A-13-37	1413
	4.875	4.500	15.375	1626A-13-47	1544
	5.875	4.500	16.375	1626A-13-57	1661

A	B	C	H	ASSEMBLY ITEM NO.	NET WT.
2.875 (2-7/8)	1.375	3.500	12.375	1626A-27-13	1282
	1.875	3.500	12.875	1626A-27-17	1341
	2.375	3.500	13.375	1626A-27-23	1399
	2.875	4.000	14.375	1626A-27-27	1471
	3.375	4.000	14.875	1626A-27-33	1530
	3.875	4.000	15.375	1626A-27-37	1588
	4.875	4.500	16.875	1626A-27-47	1719
	5.875	4.500	17.875	1626A-27-57	1836

A	B	C	H	ASSEMBLY ITEM NO.	NET WT.
4.875 (4-7/8)	1.375	4.000	14.875	1626A-47-13	1530
	1.875	4.000	15.375	1626A-47-17	1588
	2.375	4.500	16.375	1626A-47-23	1661
	2.875	4.500	16.875	1626A-47-27	1719
	3.375	4.500	17.375	1626A-47-33	1778
	3.875	4.500	17.875	1626A-47-37	1836
	4.875	4.500	18.875	1626A-47-47	1953
	5.875	4.500	19.875	1626A-47-57	2070

A	B	C	H	ASSEMBLY ITEM NO.	NET WT.
1.875 (1-7/8)	1.375	3.000	10.875	1626A-17-13	1151
	1.875	3.000	11.375	1626A-17-17	1224
	2.375	3.500	12.375	1626A-17-23	1282
	2.875	3.500	12.875	1626A-17-27	1354
	3.375	4.000	13.875	1626A-17-33	1413
	3.875	4.000	14.375	1626A-17-37	1471
	4.875	4.500	15.875	1626A-17-47	1602
	5.875	4.500	16.875	1626A-17-57	1719

A	B	C	H	ASSEMBLY ITEM NO.	NET WT.
3.375 (3-3/8)	1.375	4.000	13.375	1626A-33-13	1354
	1.875	4.000	13.875	1626A-33-17	1413
	2.375	4.000	14.375	1626A-33-23	1471
	2.875	4.500	15.375	1626A-33-27	1544
	3.375	4.500	15.875	1626A-33-33	1602
	3.875	4.500	16.375	1626A-33-37	1661
	4.875	4.500	17.375	1626A-33-47	1778
	5.875	4.500	18.375	1626A-33-57	1894

A	B	C	H	ASSEMBLY ITEM NO.	NET WT.
5.875 (5-7/8)	1.375	4.000	15.875	1626A-57-13	1647
	1.875	4.500	16.875	1626A-57-17	1719
	2.375	4.500	17.375	1626A-57-23	1778
	2.875	4.500	17.875	1626A-57-27	1836
	3.375	4.500	18.375	1626A-57-33	1894
	3.875	4.500	18.875	1626A-57-37	1953
	4.875	4.500	19.875	1626A-57-47	2070
	5.875	4.500	20.875	1626A-57-57	2187

A	B	C	H	ASSEMBLY ITEM NO.	NET WT.
2.375 (2-3/8)	1.375	3.500	11.875	1626A-23-13	1224
	1.875	3.500	12.375	1626A-23-17	1282
	2.375	3.500	12.875	1626A-23-23	1341
	2.875	4.000	13.875	1626A-23-27	1413
	3.375	4.000	14.375	1626A-23-33	1471
	3.875	4.000	14.875	1626A-23-37	1530
	4.875	4.500	16.375	1626A-23-47	1661
	5.875	4.500	17.375	1626A-23-57	1778

A	B	C	H	ASSEMBLY ITEM NO.	NET WT.
3.875 (3-7/8)	1.375	4.000	13.875	1626A-37-13	1413
	1.875	4.000	14.375	1626A-37-17	1471
	2.375	4.500	15.375	1626A-37-23	1544
	2.875	4.500	15.875	1626A-37-27	1602
	3.375	4.500	16.375	1626A-37-33	1661
	3.875	4.500	16.875	1626A-37-37	1719
	4.875	4.500	17.875	1626A-37-47	1836
	5.875	4.500	18.875	1626A-37-57	1953

Other plate thickness, riser height and ejector bar length options available

CP TOP CLAMP PLATE THICKNESS	SU SUPPORT PLATE THICKNESS	BCP BOTTOM CLAMP PLATE THICKNESS	PLATE THICKNESS NO.
0.875	0.875	0.875	7
1.375	1.375	1.375	13
1.875	1.875	1.875	17
2.375	2.375	2.375	23
2.875	2.875	2.875	27
3.375	3.375	3.375	33
3.875	3.875	3.875	37
4.875	4.875	4.875	47
5.875	5.875	5.875	57

See Items 7 & 8 below.

C RISER		
C RISER HEIGHT	RISER HEIGHT NO.	S MAX. STROKE OF EJECTOR BAR
3.000	30	1.063
3.500	35	1.563
4.000	40	2.063
4.500	45	2.563
5.000	50	3.063
5.500	55	3.563
6.000	60	4.063

See Item 8 below.

EB EJECTOR BAR	
E LENGTH NOM.	EJECTOR BAR LENGTH NO.
25.97	26
29.47	29
35.47	35

See Item 6 below.

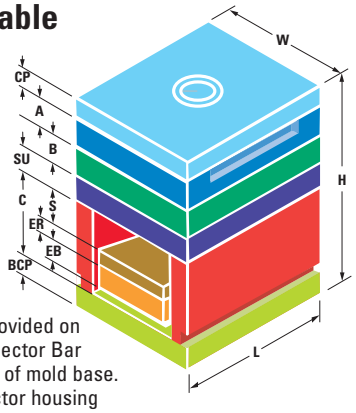

Ejector Housing Covers provided on both ends of mold when Ejector Bar Length **E** is nominal length of mold base. Customer to fabricate ejector housing covers for extended ejector bars.

WHEN ORDERING, PLEASE SPECIFY:

1. Quantity
2. Assembly Item Number (For "B" Series, replace "A" with "B")
3. Steel: #1, #2, #3 or #7 (for other steels, please specify)
4. Locating ring item number:
   Item No. 6501 (**D** = 3.990 Diameter of Locating Ring) standard
   Item No. 6504 (**D** = 3.990 Diameter of Locating Ring) clamp type
   (For other rings see DME Mold Components Catalog)
5. Type of sprue bushing, series letters: (i.e., B, etc.)
   O = Small dia. of sprue bushing orifice: .156, .218, .281 or .343
   R = Spherical radius of sprue bushing: .500 or .750
   (For sprue bushings see DME Mold Components Catalog)
6. Ejector Bar Length **E** (Ejector Bar Length at nominal length of mold base is highlighted in yellow. All other lengths provide an extended ejector bar)
7. Other **CP** Top Clamp Plate or **SU** Support Plate thicknesses as needed (Recommended thicknesses are highlighted in yellow)
8. Other **C** Riser heights as needed. Also, other **BCP** Bottom Clamp Plate thicknesses as needed. Riser height **C** and **BCP** Bottom Clamp Plate thicknesses which are highlighted in yellow are available in #1 Steel in a one-piece Welded Housing. Also, all Riser heights **C** and all **BCP** Bottom Clamp Plate thicknesses are available in #1 or #7 Steel in a Three-Piece Housing (for other steels, please specify)
9. Other features as needed (i.e. Guided Ejection, Lifting Holes, Pry Bar Slots, as well as Leader Pin, Return Pin, or Assembly Screw Relocations, etc.)
10. Method of shipment
    (For inch decimal to fractional conversion table, see page 278.)

15⁷/₈ x 29¹/₂ A-Series Mold Bases

See opposite page for general dimensions, ejector stroke data, locating rings, sprue bushings, ejector bar lengths and other ordering information.

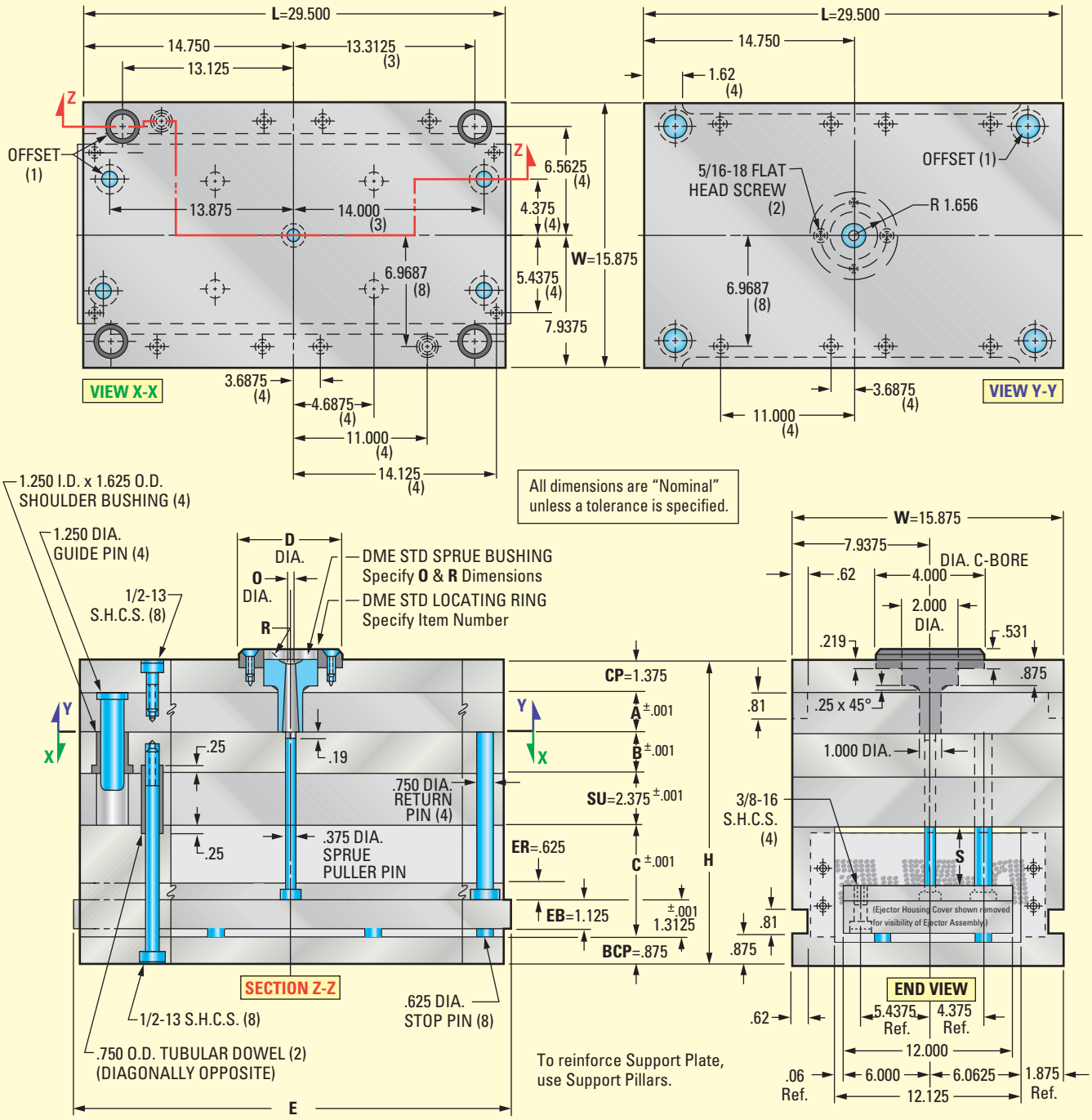

Mold Base Selections

A-Series Assembly

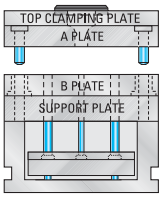

B-Series Assembly

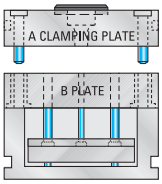

(For X-Series Stripper Plate, AX-Series and T-Series Mold Bases, see pages 173-198.)

Steel Configurations available in:

No. 1 Steel Assembly

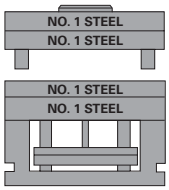

No. 2 Steel Assembly

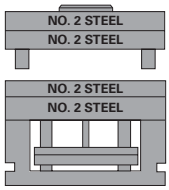

No. 3 Steel Assembly

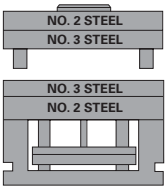

No. 7 Steel Assembly

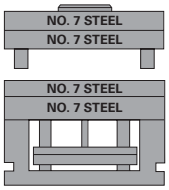

Other steel combinations also available. (Ejector Plates and Housings are No. 1 Steel, unless otherwise specified.) For additional Steel information, see page 42.

15⁷/₈ x 29¹/₂ A-Series Mold Bases

A	B	C	H	ASSEMBLY ITEM NO.	NET WT.
1.375 (1-3/8)	1.375	3.000	10.375	1629A-13-13	1240
	1.875	3.000	10.875	1629A-13-17	1306
	2.375	3.500	11.875	1629A-13-23	1388
	2.875	3.500	12.375	1629A-13-27	1455
	3.375	4.000	13.375	1629A-13-33	1537
	3.875	4.000	13.875	1629A-13-37	1603
	4.875	4.500	15.375	1629A-13-47	1751
	5.875	4.500	16.375	1629A-13-57	1884

A	B	C	H	ASSEMBLY ITEM NO.	NET WT.
2.875 (2-7/8)	1.375	3.500	12.375	1629A-27-13	1455
	1.875	3.500	12.875	1629A-27-17	1521
	2.375	3.500	13.375	1629A-27-23	1587
	2.875	4.000	14.375	1629A-27-27	1669
	3.375	4.000	14.875	1629A-27-33	1736
	3.875	4.000	15.375	1629A-27-37	1802
	4.875	4.500	16.875	1629A-27-47	1950
	5.875	4.500	17.875	1629A-27-57	2083

A	B	C	H	ASSEMBLY ITEM NO.	NET WT.
4.875 (4-7/8)	1.375	4.000	14.875	1629A-47-13	1736
	1.875	4.000	15.375	1629A-47-17	1802
	2.375	4.500	16.375	1629A-47-23	1884
	2.875	4.500	16.875	1629A-47-27	1950
	3.375	4.500	17.375	1629A-47-33	2017
	3.875	4.500	17.875	1629A-47-37	1083
	4.875	4.500	18.875	1629A-47-47	2216
	5.875	4.500	19.875	1629A-47-57	2348

A	B	C	H	ASSEMBLY ITEM NO.	NET WT.
1.875 (1-7/8)	1.375	3.000	10.875	1629A-17-13	1306
	1.875	3.000	11.375	1629A-17-17	1388
	2.375	3.500	12.375	1629A-17-23	1455
	2.875	3.500	12.875	1629A-17-27	1537
	3.375	4.000	13.875	1629A-17-33	1603
	3.875	4.000	14.375	1629A-17-37	1669
	4.875	4.500	15.875	1629A-17-47	1818
	5.875	4.500	16.875	1629A-17-57	1950

A	B	C	H	ASSEMBLY ITEM NO.	NET WT.
3.375 (3-3/8)	1.375	4.000	13.375	1629A-33-13	1537
	1.875	4.000	13.875	1629A-33-17	1603
	2.375	4.000	14.375	1629A-33-23	1669
	2.875	4.500	15.375	1629A-33-27	1751
	3.375	4.500	15.875	1629A-33-33	1818
	3.875	4.500	16.375	1629A-33-37	1884
	4.875	4.500	17.375	1629A-33-47	2017
	5.875	4.500	18.375	1629A-33-57	2149

A	B	C	H	ASSEMBLY ITEM NO.	NET WT.
5.875 (5-7/8)	1.375	4.000	15.875	1629A-57-13	1868
	1.875	4.500	16.875	1629A-57-17	1950
	2.375	4.500	17.375	1629A-57-23	2017
	2.875	4.500	17.875	1629A-57-27	2083
	3.375	4.500	18.375	1629A-57-33	2149
	3.875	4.500	18.875	1629A-57-37	2216
	4.875	4.500	19.875	1629A-57-47	2348
	5.875	4.500	20.875	1629A-57-57	2481

A	B	C	H	ASSEMBLY ITEM NO.	NET WT.
2.375 (2-3/8)	1.375	3.500	11.875	1629A-23-13	1388
	1.875	3.500	12.375	1629A-23-17	1455
	2.375	3.500	12.875	1629A-23-23	1521
	2.875	4.000	13.875	1629A-23-27	1603
	3.375	4.000	14.375	1629A-23-33	1669
	3.875	4.000	14.875	1629A-23-37	1736
	4.875	4.500	16.375	1629A-23-47	1884
	5.875	4.500	17.375	1629A-23-57	2017

A	B	C	H	ASSEMBLY ITEM NO.	NET WT.
3.875 (3-7/8)	1.375	4.000	13.875	1629A-37-13	1603
	1.875	4.000	14.375	1629A-37-17	1669
	2.375	4.500	15.375	1629A-37-23	1751
	2.875	4.500	15.875	1629A-37-27	1818
	3.375	4.500	16.375	1629A-37-33	1884
	3.875	4.500	16.875	1629A-37-37	1950
	4.875	4.500	17.875	1629A-37-47	2-93
	5.875	4.500	18.875	1629A-37-57	2216

Other plate thickness, riser height and ejector bar length options available

CP TOP CLAMP PLATE THICKNESS	SU SUPPORT PLATE THICKNESS	BCP BOTTOM CLAMP PLATE THICKNESS	PLATE THICKNESS NO.
0.875	0.875	0.875	7
1.375	1.375	1.375	13
1.875	1.875	1.875	17
2.375	2.375	2.375	23
2.875	2.875	2.875	27
3.375	3.375	3.375	33
3.875	3.875	3.875	37
4.875	4.875	4.875	47
5.875	5.875	5.875	57

See Items 7 & 8 below.

C RISER		
C RISER HEIGHT	RISER HEIGHT NO.	S MAX. STROKE OF EJECTOR BAR
3.000	30	1.063
3.500	35	1.563
4.000	40	2.063
4.500	45	2.563
5.000	50	3.063
5.500	55	3.563
6.000	60	4.063

See Item 8 below.

EB EJECTOR BAR	
E LENGTH NOM.	EJECTOR BAR LENGTH NO.
29.47	29
35.47	35

See Item 6 below.

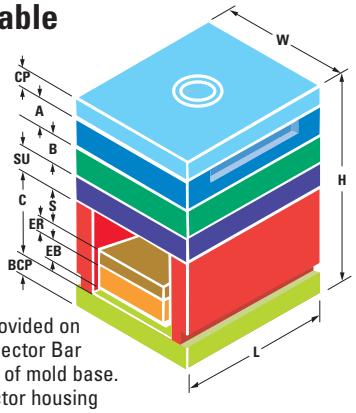

Ejector Housing Covers provided on both ends of mold when Ejector Bar Length **E** is nominal length of mold base. Customer to fabricate ejector housing covers for extended ejector bars.

WHEN ORDERING, PLEASE SPECIFY:

1. Quantity
2. Assembly Item Number (For "B" Series, replace "A" with "B")
3. Steel: #1, #2, #3 or #7 (for other steels, please specify)
4. Locating ring item number:
   Item No. 6501 (**D** = 3.990 Diameter of Locating Ring) standard
   Item No. 6504 (**D** = 3.990 Diameter of Locating Ring) clamp type
   (For other rings see DME Mold Components Catalog)
5. Type of sprue bushing, series letters: (i.e., B, etc.)
   O = Small dia. of sprue bushing orifice: .156, .218, .281 or .343
   R = Spherical radius of sprue bushing: .500 or .750
   (For sprue bushings see DME Mold Components Catalog)
6. Ejector Bar Length **E** (Ejector Bar Length at nominal length of mold base is highlighted in yellow. All other lengths provide an extended ejector bar)
7. Other **CP** Top Clamp Plate or **SU** Support Plate thicknesses as needed (Recommended thicknesses are highlighted in yellow)
8. Other **C** Riser heights as needed. Also, other **BCP** Bottom Clamp Plate thicknesses as needed. Riser height **C** and **BCP** Bottom Clamp Plate thicknesses which are highlighted in yellow are available in #1 Steel in a one-piece Welded Housing. Also, all Riser heights **C** and all **BCP** Bottom Clamp Plate thicknesses are available in #1 or #7 Steel in a Three-Piece Housing (for other steels, please specify)
9. Other features as needed (i.e. Guided Ejection, Lifting Holes, Pry Bar Slots, as well as Leader Pin, Return Pin, or Assembly Screw Relocations, etc.)
10. Method of shipment
    (For inch decimal to fractional conversion table, see page 278.)

15⁷/₈ x 35¹/₂ A-Series Mold Bases

See opposite page for general dimensions, ejector stroke data, locating rings, sprue bushings, ejector bar lengths and other ordering information.

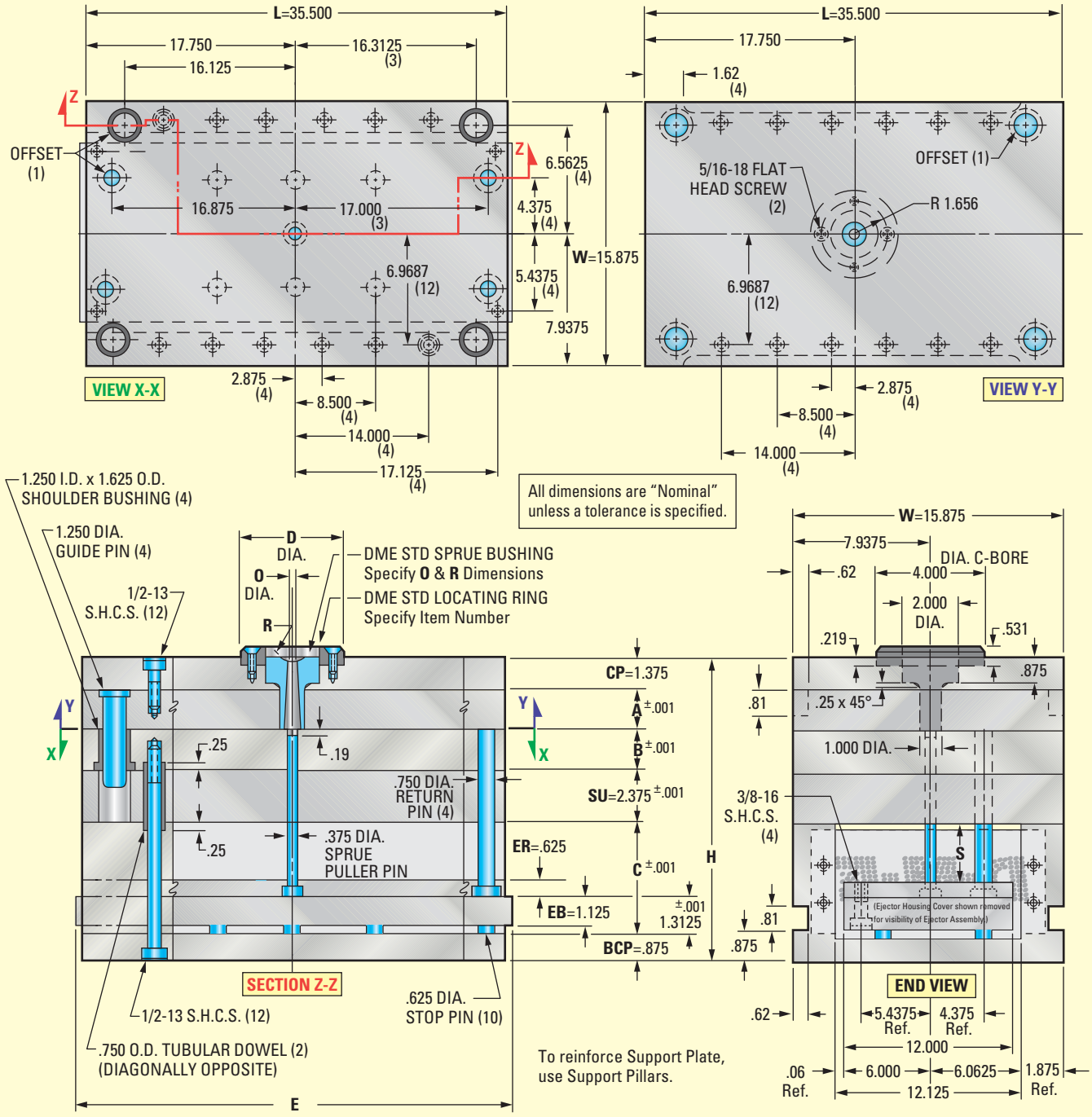

Mold Base Selections

A-Series Assembly

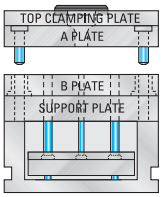

B-Series Assembly

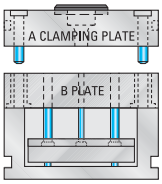

(For X-Series Stripper Plate, AX-Series and T-Series Mold Bases, see pages 173-198.)

Steel Configurations available in:

No. 1 Steel Assembly

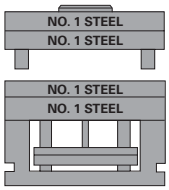

No. 2 Steel Assembly

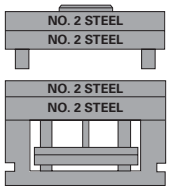

No. 3 Steel Assembly

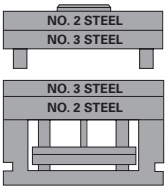

No. 7 Steel Assembly

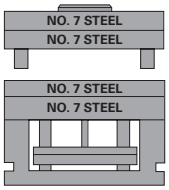

Other steel combinations also available. (Ejector Plates and Housings are No. 1 Steel, unless otherwise specified.) For additional Steel information, see page 42.

15⁷/₈ x 35¹/₂ A-Series Mold Bases

A	B	C	H	ASSEMBLY ITEM NO.	NET WT.
1.375 (1-3/8)	1.375	3.000	10.375	1635A-13-13	1492
	1.875	3.000	10.875	1635A-13-17	1572
	2.375	3.500	11.875	1635A-13-23	1671
	2.875	3.500	12.375	1635A-13-27	1750
	3.375	4.000	13.375	1635A-13-33	1849
	3.875	4.000	13.875	1635A-13-37	1929
	4.875	4.500	15.375	1635A-13-47	2107
	5.875	4.500	16.375	1635A-13-57	2267

A	B	C	H	ASSEMBLY ITEM NO.	NET WT.
2.875 (2-7/8)	1.375	3.500	12.375	1635A-27-13	1750
	1.875	3.500	12.875	1635A-27-17	1830
	2.375	3.500	13.375	1635A-27-23	1910
	2.875	4.000	14.375	1635A-27-27	2009
	3.375	4.000	14.875	1635A-27-33	2089
	3.875	4.000	15.375	1635A-27-37	2168
	4.875	4.500	16.875	1635A-27-47	2347
	5.875	4.500	17.875	1635A-27-57	2507

A	B	C	H	ASSEMBLY ITEM NO.	NET WT.
4.875 (4-7/8)	1.375	4.000	14.875	1635A-47-13	2089
	1.875	4.000	15.375	1635A-47-17	2168
	2.375	4.500	16.375	1635A-47-23	2267
	2.875	4.500	16.875	1635A-47-27	2347
	3.375	4.500	17.375	1635A-47-33	2427
	3.875	4.500	17.875	1635A-47-37	2507
	4.875	4.500	18.875	1635A-47-47	2666
	5.875	4.500	19.875	1635A-47-57	2826

A	B	C	H	ASSEMBLY ITEM NO.	NET WT.
1.875 (1-7/8)	1.375	3.000	10.875	1635A-17-13	1572
	1.875	3.000	11.375	1635A-17-17	1671
	2.375	3.500	12.375	1635A-17-23	1750
	2.875	3.500	12.875	1635A-17-27	1849
	3.375	4.000	13.875	1635A-17-33	1929
	3.875	4.000	14.375	1635A-17-37	2009
	4.875	4.500	15.875	1635A-17-47	2187
	5.875	4.500	16.875	1635A-17-57	2347

A	B	C	H	ASSEMBLY ITEM NO.	NET WT.
3.375 (3-3/8)	1.375	4.000	13.375	1635A-33-13	1849
	1.875	4.000	13.875	1635A-33-17	1929
	2.375	4.000	14.375	1635A-33-23	2009
	2.875	4.500	15.375	1635A-33-27	2107
	3.375	4.500	15.875	1635A-33-33	2187
	3.875	4.500	16.375	1635A-33-37	2267
	4.875	4.500	17.375	1635A-33-47	2427
	5.875	4.500	18.375	1635A-33-57	2586

A	B	C	H	ASSEMBLY ITEM NO.	NET WT.
5.875 (5-7/8)	1.375	4.000	15.875	1635A-57-13	2248
	1.875	4.500	16.875	1635A-57-17	2347
	2.375	4.500	17.375	1635A-57-23	2427
	2.875	4.500	17.875	1635A-57-27	2507
	3.375	4.500	18.375	1635A-57-33	2586
	3.875	4.500	18.875	1635A-57-37	2666
	4.875	4.500	19.875	1635A-57-47	2826
	5.875	4.500	20.875	1635A-57-57	2987

A	B	C	H	ASSEMBLY ITEM NO.	NET WT.
2.375 (2-3/8)	1.375	3.500	11.875	1635A-23-13	1671
	1.875	3.500	12.375	1635A-23-17	1750
	2.375	3.500	12.875	1635A-23-23	1830
	2.875	4.000	13.875	1635A-23-27	1929
	3.375	4.000	14.375	1635A-23-33	2009
	3.875	4.000	14.875	1635A-23-37	2089
	4.875	4.500	16.375	1635A-23-47	2267
	5.875	4.500	17.375	1635A-23-57	2427

A	B	C	H	ASSEMBLY ITEM NO.	NET WT.
3.875 (3-7/8)	1.375	4.000	13.875	1635A-37-13	1929
	1.875	4.000	14.375	1635A-37-17	2009
	2.375	4.500	15.375	1635A-37-23	2107
	2.875	4.500	15.875	1635A-37-27	2187
	3.375	4.500	16.375	1635A-37-33	2267
	3.875	4.500	16.875	1635A-37-37	2347
	4.875	4.500	17.875	1635A-37-47	2507
	5.875	4.500	18.875	1635A-37-57	2666

Other plate thickness, riser height and ejector bar length options available

CP TOP CLAMP PLATE THICKNESS	SU SUPPORT PLATE THICKNESS	BCP BOTTOM CLAMP PLATE THICKNESS	PLATE THICKNESS NO.
0.875	0.875	0.875	7
1.375	1.375	1.375	13
1.875	1.875	1.875	17
2.375	2.375	2.375	23
2.875	2.875	2.875	27
3.375	3.375	3.375	33
3.875	3.875	3.875	37
4.875	4.875	4.875	47
5.875	5.875	5.875	57

See Items 7 & 8 below.

C RISER		
C RISER HEIGHT	RISER HEIGHT NO.	S MAX. STROKE OF EJECTOR BAR
3.000	30	1.063
3.500	35	1.563
4.000	40	2.063
4.500	45	2.563
5.000	50	3.063
5.500	55	3.563
6.000	60	4.063

See Item 8 below.

EB EJECTOR BAR	
E LENGTH NOM.	EJECTOR BAR LENGTH NO.
35.47	35

See Item 6 below.

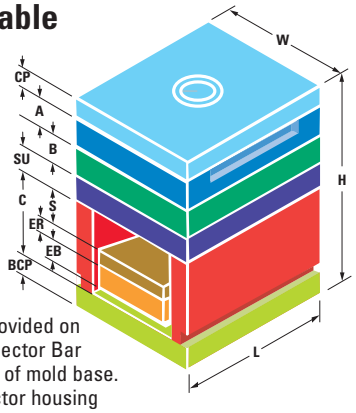

Ejector Housing Covers provided on both ends of mold when Ejector Bar Length **E** is nominal length of mold base. Customer to fabricate ejector housing covers for extended ejector bars.

WHEN ORDERING, PLEASE SPECIFY:

1. Quantity
2. Assembly Item Number (For "B" Series, replace "A" with "B")
3. Steel: #1, #2, #3 or #7 (for other steels, please specify)
4. Locating ring item number:
   Item No. 6501 (**D** = 3.990 Diameter of Locating Ring) standard
   Item No. 6504 (**D** = 3.990 Diameter of Locating Ring) clamp type
   (For other rings see DME Mold Components Catalog)
5. Type of sprue bushing, series letters: (i.e., B, etc.)
   O = Small dia. of sprue bushing orifice: .156, .218, .281 or .343
   R = Spherical radius of sprue bushing: .500 or .750
   (For sprue bushings see DME Mold Components Catalog)
6. Ejector Bar Length **E** (Ejector Bar Length at nominal length of mold base is highlighted in yellow. All other lengths provide an extended ejector bar)
7. Other **CP** Top Clamp Plate or **SU** Support Plate thicknesses as needed (Recommended thicknesses are highlighted in yellow)
8. Other **C** Riser heights as needed. Also, other **BCP** Bottom Clamp Plate thicknesses as needed. Riser height **C** and **BCP** Bottom Clamp Plate thicknesses which are highlighted in yellow are available in #1 Steel in a one-piece Welded Housing. Also, all Riser heights **C** and all **BCP** Bottom Clamp Plate thicknesses are available in #1 or #7 Steel in a Three-Piece Housing (for other steels, please specify)
9. Other features as needed (i.e. Guided Ejection, Lifting Holes, Pry Bar Slots, as well as Leader Pin, Return Pin, or Assembly Screw Relocations, etc.)
10. Method of shipment
    (For inch decimal to fractional conversion table, see page 278.)

DME A-Series Mold Bases

OVER 75 TRILLION POSSIBLE MOLD BASE CONFIGURATIONS

A-Series Mold Bases

Table of Contents

88A....52-53
812A....54-55
108A....56-57
1012A....58-59
1016A....60-61
1020A....62-63
1112A....64-65
1114A....66-67
1118A....68-69
1123A....70-71
1212A....72-73
1215A....74-75
1220A....76-77
1223A....78-79
1315A....80-81
1318A....82-83
1321A....84-85
1323A....86-87
1326A....88-89
1329A....90-91
1518A....92-93
1524A....94-95
1529A....96-97
1616A....98-99
1620A....100-101
1623A....102-103
1626A....104-105
1629A....106-107
1635A....108-109
1724A....110-111
1729A....112-113
1818A....114-115
1820A....116-117
1823A....118-119
1826A....120-121
1829A....122-123
1835A....124-125
1924A....126-127
1929A....128-129
1935A....130-131
2424A....132-133
2429A....134-135
2435A....136-137
B-Series Mold Bases....138

16½ x 23¾ A-Series Mold Bases

See opposite page for general dimensions, ejector stroke data, locating rings, sprue bushings, ejector bar lengths and other ordering information.

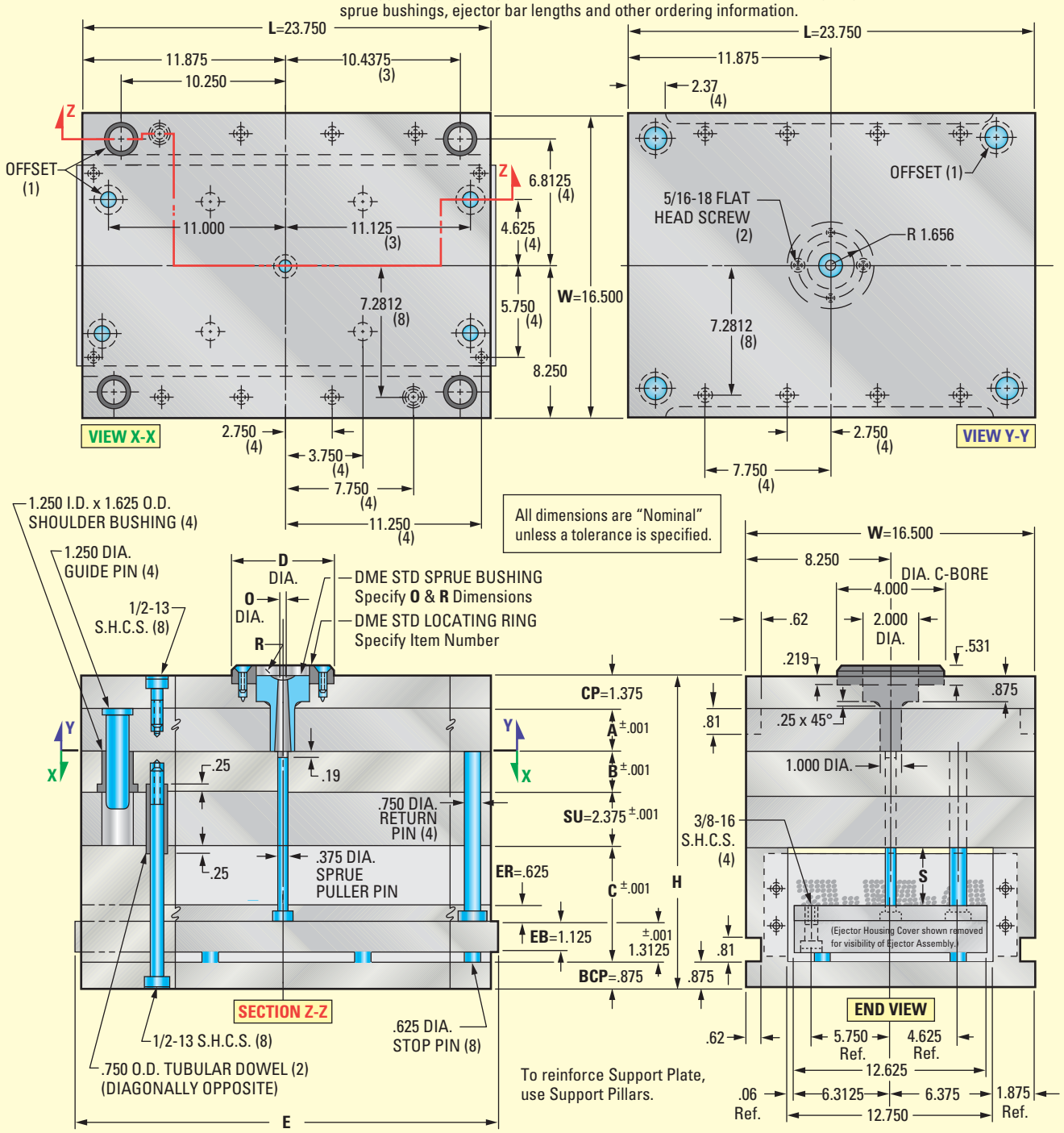

Mold Base Selections

A-Series Assembly

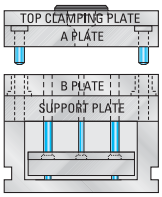

B-Series Assembly

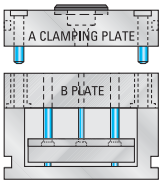

(For X-Series Stripper Plate, AX-Series and T-Series Mold Bases, see pages 173-198.)

Steel Configurations available in:

No. 1 Steel Assembly

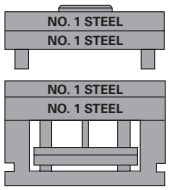

No. 2 Steel Assembly

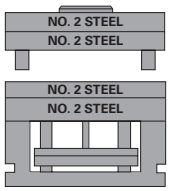

No. 3 Steel Assembly

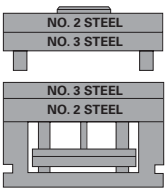

No. 7 Steel Assembly

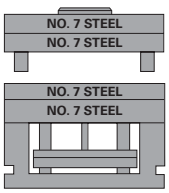

Other steel combinations also available. (Ejector Plates and Housings are No. 1 Steel, unless otherwise specified.) For additional Steel information, see page 42.

16½ x 23¾ A-Series Mold Bases

A	B	C	H	ASSEMBLY ITEM NO.	NET WT.
1.375 (1-3/8)	1.375	3.000	10.375	1724A-13-13	1037
	1.875	3.000	10.875	1724A-13-17	1092
	2.375	3.500	11.875	1724A-13-23	1160
	2.875	3.500	12.375	1724A-13-27	1216
	3.375	4.000	13.375	1724A-13-33	1284
	3.875	4.000	13.875	1724A-13-37	1340
	4.875	4.500	15.375	1724A-13-47	1463
	5.875	4.500	16.375	1724A-13-57	1574

A	B	C	H	ASSEMBLY ITEM NO.	NET WT.
1.875 (1-7/8)	1.375	3.000	10.875	1724A-17-13	1092
	1.875	3.000	11.375	1724A-17-17	1160
	2.375	3.500	12.375	1724A-17-23	1216
	2.875	3.500	12.875	1724A-17-27	1284
	3.375	4.000	13.875	1724A-17-33	1340
	3.875	4.000	14.375	1724A-17-37	1395
	4.875	4.500	15.875	1724A-17-47	1519
	5.875	4.500	16.875	1724A-17-57	1630

A	B	C	H	ASSEMBLY ITEM NO.	NET WT.
2.375 (2-3/8)	1.375	3.500	11.875	1724A-23-13	1160
	1.875	3.500	12.375	1724A-23-17	1216
	2.375	3.500	12.875	1724A-23-23	1271
	2.875	4.000	13.875	1724A-23-27	1340
	3.375	4.000	14.375	1724A-23-33	1395
	3.875	4.000	14.875	1724A-23-37	1451
	4.875	4.500	16.375	1724A-23-47	1574
	5.875	4.500	17.375	1724A-23-57	1685

A	B	C	H	ASSEMBLY ITEM NO.	NET WT.
2.875 (2-7/8)	1.375	3.500	12.375	1724A-27-13	1216
	1.875	3.500	12.875	1724A-27-17	1271
	2.375	3.500	13.375	1724A-27-23	1327
	2.875	4.000	14.375	1724A-27-27	1395
	3.375	4.000	14.875	1724A-27-33	1451
	3.875	4.000	15.375	1724A-27-37	1506
	4.875	4.500	16.875	1724A-27-47	1630
	5.875	4.500	17.875	1724A-27-57	1741

A	B	C	H	ASSEMBLY ITEM NO.	NET WT.
3.375 (3-3/8)	1.375	4.000	13.375	1724A-33-13	1284
	1.875	4.000	13.875	1724A-33-17	1340
	2.375	4.000	14.375	1724A-33-23	1395
	2.875	4.500	15.375	1724A-33-27	1463
	3.375	4.500	15.875	1724A-33-33	1519
	3.875	4.500	16.375	1724A-33-37	1574
	4.875	4.500	17.375	1724A-33-47	1685
	5.875	4.500	18.375	1724A-33-57	1796

A	B	C	H	ASSEMBLY ITEM NO.	NET WT.
3.875 (3-7/8)	1.375	4.000	13.875	1724A-37-13	1340
	1.875	4.000	14.375	1724A-37-17	1395
	2.375	4.500	15.375	1724A-37-23	1463
	2.875	4.500	15.875	1724A-37-27	1519
	3.375	4.500	16.375	1724A-37-33	1574
	3.875	4.500	16.875	1724A-37-37	1630
	4.875	4.500	17.875	1724A-37-47	1741
	5.875	4.500	18.875	1724A-37-57	1852

A	B	C	H	ASSEMBLY ITEM NO.	NET WT.
4.875 (4-7/8)	1.375	4.000	14.875	1724A-47-13	1451
	1.875	4.000	15.375	1724A-47-17	1506
	2.375	4.500	16.375	1724A-47-23	1574
	2.875	4.500	16.875	1724A-47-27	1630
	3.375	4.500	17.375	1724A-47-33	1685
	3.875	4.500	17.875	1724A-47-37	1741
	4.875	4.500	18.875	1724A-47-47	1852
	5.875	4.500	19.875	1724A-47-57	1963

A	B	C	H	ASSEMBLY ITEM NO.	NET WT.
5.875 (5-7/8)	1.375	4.000	15.875	1724A-57-13	1562
	1.875	4.500	16.875	1724A-57-17	1630
	2.375	4.500	17.375	1724A-57-23	1685
	2.875	4.500	17.875	1724A-57-27	1741
	3.375	4.500	18.375	1724A-57-33	1796
	3.875	4.500	18.875	1724A-57-37	1852
	4.875	4.500	19.875	1724A-57-47	1963
	5.875	4.500	20.875	1724A-57-57	2074

Other plate thickness, riser height and ejector bar length options available

CP TOP CLAMP PLATE THICKNESS	SU SUPPORT PLATE THICKNESS	BCP BOTTOM CLAMP PLATE THICKNESS	PLATE THICKNESS NO.
0.875	0.875	0.875	7
1.375	1.375	1.375	13
1.875	1.875	1.875	17
2.375	2.375	2.375	23
2.875	2.875	2.875	27
3.375	3.375	3.375	33
3.875	3.875	3.875	37
4.875	4.875	4.875	47
5.875	5.875	5.875	57

See Items 7 & 8 below.

C RISER		
C RISER HEIGHT	RISER HEIGHT NO.	S MAX. STROKE OF EJECTOR BAR
3.000	30	1.063
3.500	35	1.563
4.000	40	2.063
4.500	45	2.563
5.000	50	3.063
5.500	55	3.563
6.000	60	4.063

See Item 8 below.

EB EJECTOR BAR	
E LENGTH NOM.	EJECTOR BAR LENGTH NO.
23.72	24
29.47	29
35.47	35

See Item 6 below.

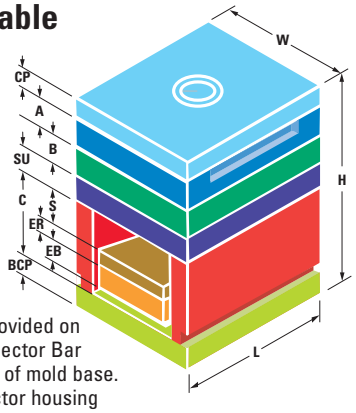

Ejector Housing Covers provided on both ends of mold when Ejector Bar Length **E** is nominal length of mold base. Customer to fabricate ejector housing covers for extended ejector bars.

WHEN ORDERING, PLEASE SPECIFY:

1. Quantity
2. Assembly Item Number (For "B" Series, replace "A" with "B")
3. Steel: #1, #2, #3 or #7 (for other steels, please specify)
4. Locating ring item number:
   Item No. 6501 (**D** = 3.990 Diameter of Locating Ring) standard
   Item No. 6504 (**D** = 3.990 Diameter of Locating Ring) clamp type
   (For other rings see DME Mold Components Catalog)
5. Type of sprue bushing, series letters: (i.e., B, etc.)
   O = Small dia. of sprue bushing orifice: .156, .218, .281 or .343
   R = Spherical radius of sprue bushing: .500 or .750
   (For sprue bushings see DME Mold Components Catalog)
6. Ejector Bar Length **E** (Ejector Bar Length at nominal length of mold base is highlighted in yellow. All other lengths provide an extended ejector bar)
7. Other **CP** Top Clamp Plate or **SU** Support Plate thicknesses as needed (Recommended thicknesses are highlighted in yellow)
8. Other **C** Riser heights as needed. Also, other **BCP** Bottom Clamp Plate thicknesses as needed. Riser height **C** and **BCP** Bottom Clamp Plate thicknesses which are highlighted in yellow are available in #1 Steel in a one-piece Welded Housing. Also, all Riser heights **C** and all **BCP** Bottom Clamp Plate thicknesses are available in #1 or #7 Steel in a Three-Piece Housing (for other steels, please specify)
9. Other features as needed (i.e. Guided Ejection, Lifting Holes, Pry Bar Slots, as well as Leader Pin, Return Pin, or Assembly Screw Relocations, etc.)
10. Method of shipment
    (For inch decimal to fractional conversion table, see page 278.)

16½ x 29½ A-Series Mold Bases

See opposite page for general dimensions, ejector stroke data, locating rings, sprue bushings, ejector bar lengths and other ordering information.

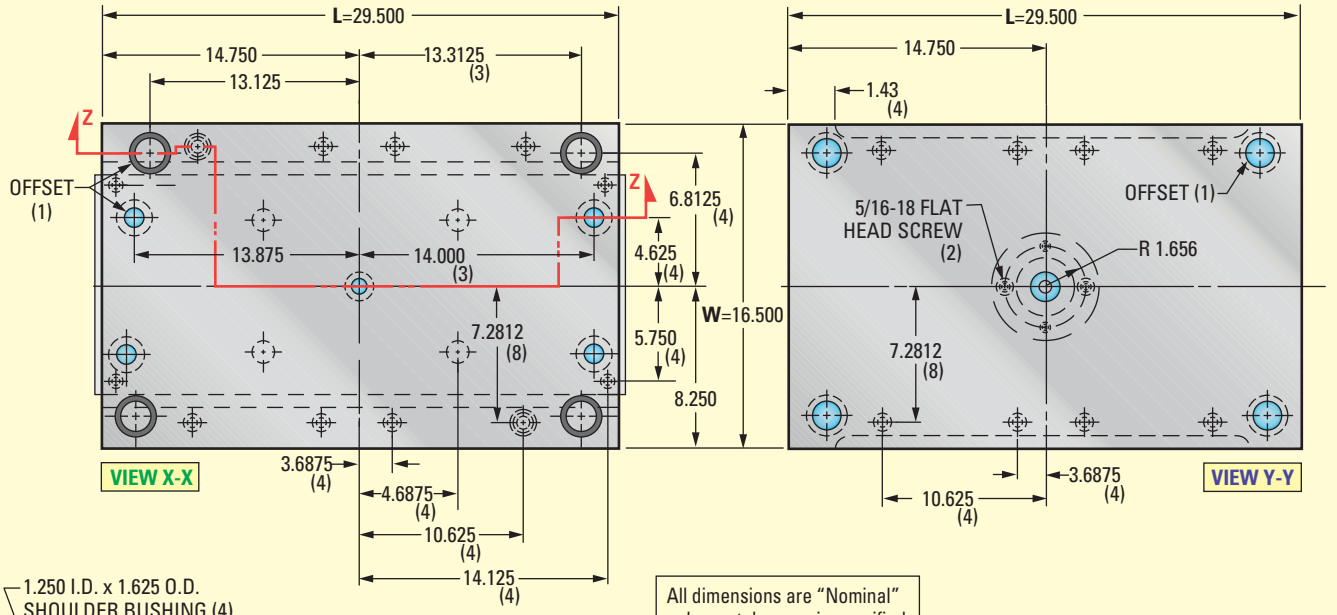

All dimensions are "Nominal" unless a tolerance is specified.

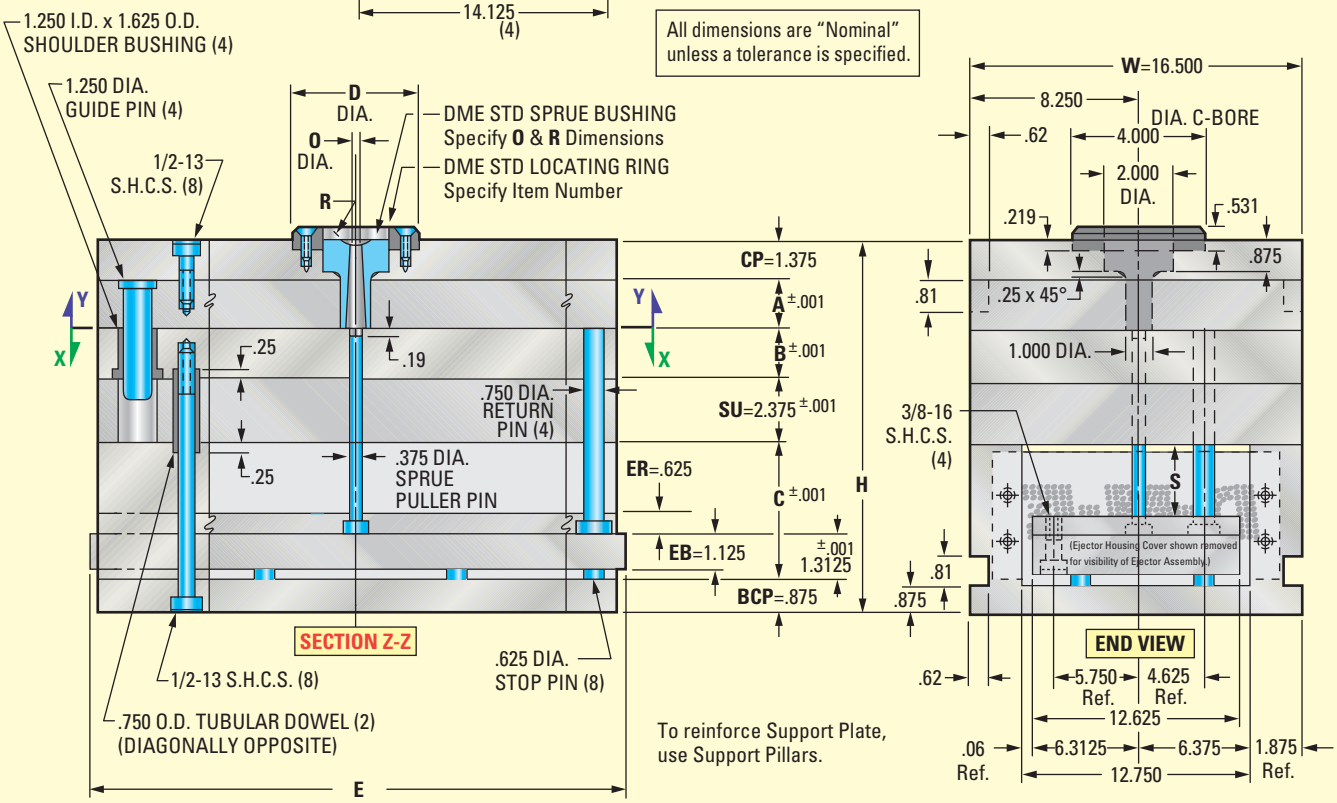

To reinforce Support Plate, use Support Pillars.

Mold Base Selections

A-Series Assembly

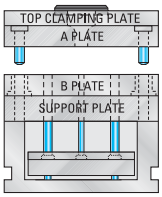

B-Series Assembly

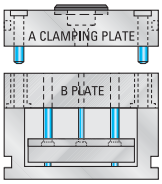

(For X-Series Stripper Plate, AX-Series and T-Series Mold Bases, see pages 173-198.)

Steel Configurations available in:

No. 1 Steel Assembly

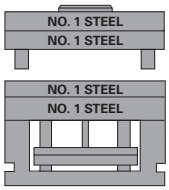

No. 2 Steel Assembly

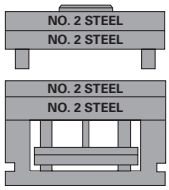

No. 3 Steel Assembly

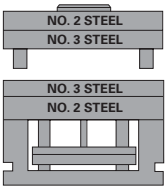

No. 7 Steel Assembly

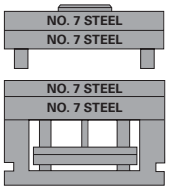

Other steel combinations also available. (Ejector Plates and Housings are No. 1 Steel, unless otherwise specified.) For additional Steel information, see page 42.

16½ x 29½ A-Series Mold Bases

A	B	C	H	ASSEMBLY ITEM NO.	NET WT.
1.375 (1-3/8)	1.375	3.000	10.375	1729A-13-13	1288
	1.875	3.000	10.875	1729A-13-17	1357
	2.375	3.500	11.875	1729A-13-23	1441
	2.875	3.500	12.375	1729A-13-27	1510
	3.375	4.000	13.375	1729A-13-33	1595
	3.875	4.000	13.875	1729A-13-37	1664
	4.875	4.500	15.375	1729A-13-47	1817
	5.875	4.500	16.375	1729A-13-57	1955

A	B	C	H	ASSEMBLY ITEM NO.	NET WT.
2.875 (2-7/8)	1.375	3.500	12.375	1729A-27-13	1510
	1.875	3.500	12.875	1729A-27-17	1579
	2.375	3.500	13.375	1729A-27-23	1648
	2.875	4.000	14.375	1729A-27-27	1733
	3.375	4.000	14.875	1729A-27-33	1802
	3.875	4.000	15.375	1729A-27-37	1871
	4.875	4.500	16.875	1729A-27-47	2024
	5.875	4.500	17.875	1729A-27-57	2162

A	B	C	H	ASSEMBLY ITEM NO.	NET WT.
4.875 (4-7/8)	1.375	4.000	14.875	1729A-47-13	1802
	1.875	4.000	15.375	1729A-47-17	1871
	2.375	4.500	16.375	1729A-47-23	1955
	2.875	4.500	16.875	1729A-47-27	2024
	3.375	4.500	17.375	1729A-47-33	2093
	3.875	4.500	17.875	1729A-47-37	2162
	4.875	4.500	18.875	1729A-47-47	2300
	5.875	4.500	19.875	1729A-47-57	2438

A	B	C	H	ASSEMBLY ITEM NO.	NET WT.
1.875 (1-7/8)	1.375	3.000	10.875	1729A-17-13	1357
	1.875	3.000	11.375	1729A-17-17	1441
	2.375	3.500	12.375	1729A-17-23	1510
	2.875	3.500	12.875	1729A-17-27	1595
	3.375	4.000	13.875	1729A-17-33	1664
	3.875	4.000	14.375	1729A-17-37	1733
	4.875	4.500	15.875	1729A-17-47	1886
	5.875	4.500	16.875	1729A-17-57	2024

A	B	C	H	ASSEMBLY ITEM NO.	NET WT.
3.375 (3-3/8)	1.375	4.000	13.375	1729A-33-13	1595
	1.875	4.000	13.875	1729A-33-17	1664
	2.375	4.000	14.375	1729A-33-23	1733
	2.875	4.500	15.375	1729A-33-27	1817
	3.375	4.500	15.875	1729A-33-33	1886
	3.875	4.500	16.375	1729A-33-37	1955
	4.875	4.500	17.375	1729A-33-47	2093
	5.875	4.500	18.375	1729A-33-57	2231

A	B	C	H	ASSEMBLY ITEM NO.	NET WT.
5.875 (5-7/8)	1.375	4.000	15.875	1729A-57-13	1940
	1.875	4.500	16.875	1729A-57-17	2024
	2.375	4.500	17.375	1729A-57-23	2093
	2.875	4.500	17.875	1729A-57-27	2162
	3.375	4.500	18.375	1729A-57-33	2231
	3.875	4.500	18.875	1729A-57-37	2300
	4.875	4.500	19.875	1729A-57-47	2438
	5.875	4.500	20.875	1729A-57-57	2576

A	B	C	H	ASSEMBLY ITEM NO.	NET WT.
2.375 (2-3/8)	1.375	3.500	11.875	1729A-23-13	1441
	1.875	3.500	12.375	1729A-23-17	1510
	2.375	3.500	12.875	1729A-23-23	1579
	2.875	4.000	13.875	1729A-23-27	1664
	3.375	4.000	14.375	1729A-23-33	1733
	3.875	4.000	14.875	1729A-23-37	1802
	4.875	4.500	16.375	1729A-23-47	1955
	5.875	4.500	17.375	1729A-23-57	2093

A	B	C	H	ASSEMBLY ITEM NO.	NET WT.
3.875 (3-7/8)	1.375	4.000	13.875	1729A-37-13	1664
	1.875	4.000	14.375	1729A-37-17	1733
	2.375	4.500	15.375	1729A-37-23	1817
	2.875	4.500	15.875	1729A-37-27	1886
	3.375	4.500	16.375	1729A-37-33	1955
	3.875	4.500	16.875	1729A-37-37	2024
	4.875	4.500	17.875	1729A-37-47	2162
	5.875	4.500	18.875	1729A-37-57	2300

Other plate thickness, riser height and ejector bar length options available

CP TOP CLAMP PLATE THICKNESS	SU SUPPORT PLATE THICKNESS	BCP BOTTOM CLAMP PLATE THICKNESS	PLATE THICKNESS NO.
0.875	0.875	0.875	7
1.375	1.375	1.375	13
1.875	1.875	1.875	17
2.375	2.375	2.375	23
2.875	2.875	2.875	27
3.375	3.375	3.375	33
3.875	3.875	3.875	37
4.875	4.875	4.875	47
5.875	5.875	5.875	57

See Items 7 & 8 below.

C RISER		
C RISER HEIGHT	RISER HEIGHT NO.	S MAX. STROKE OF EJECTOR BAR
3.000	30	1.063
3.500	35	1.563
4.000	40	2.063
4.500	45	2.563
5.000	50	3.063
5.500	55	3.563
6.000	60	4.063

See Item 8 below.

EB EJECTOR BAR	
E LENGTH NOM.	EJECTOR BAR LENGTH NO.
29.47	29
35.47	35

See Item 6 below.

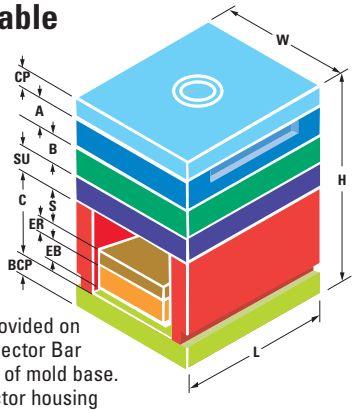

Ejector Housing Covers provided on both ends of mold when Ejector Bar Length **E** is nominal length of mold base. Customer to fabricate ejector housing covers for extended ejector bars.

WHEN ORDERING, PLEASE SPECIFY:

1. Quantity
2. Assembly Item Number (For "B" Series, replace "A" with "B")
3. Steel: #1, #2, #3 or #7 (for other steels, please specify)
4. Locating ring item number:
   Item No. 6501 (**D** = 3.990 Diameter of Locating Ring) standard
   Item No. 6504 (**D** = 3.990 Diameter of Locating Ring) clamp type
   (For other rings see DME Mold Components Catalog)
5. Type of sprue bushing, series letters: (i.e., B, etc.)
   O = Small dia. of sprue bushing orifice: .156, .218, .281 or .343
   R = Spherical radius of sprue bushing: .500 or .750
   (For sprue bushings see DME Mold Components Catalog)
6. Ejector Bar Length **E** (Ejector Bar Length at nominal length of mold base is highlighted in yellow. All other lengths provide an extended ejector bar)
7. Other **CP** Top Clamp Plate or **SU** Support Plate thicknesses as needed (Recommended thicknesses are highlighted in yellow)
8. Other **C** Riser heights as needed. Also, other **BCP** Bottom Clamp Plate thicknesses as needed. Riser height **C** and **BCP** Bottom Clamp Plate thicknesses which are highlighted in yellow are available in #1 Steel in a one-piece Welded Housing. Also, all Riser heights **C** and all **BCP** Bottom Clamp Plate thicknesses are available in #1 or #7 Steel in a Three-Piece Housing (for other steels, please specify)
9. Other features as needed (i.e. Guided Ejection, Lifting Holes, Pry Bar Slots, as well as Leader Pin, Return Pin, or Assembly Screw Relocations, etc.)
10. Method of shipment
    (For inch decimal to fractional conversion table, see page 278.)

17⁷/₈ x 18" A-Series Mold Bases

See opposite page for general dimensions, ejector stroke data, locating rings, sprue bushings, ejector bar lengths and other ordering information.

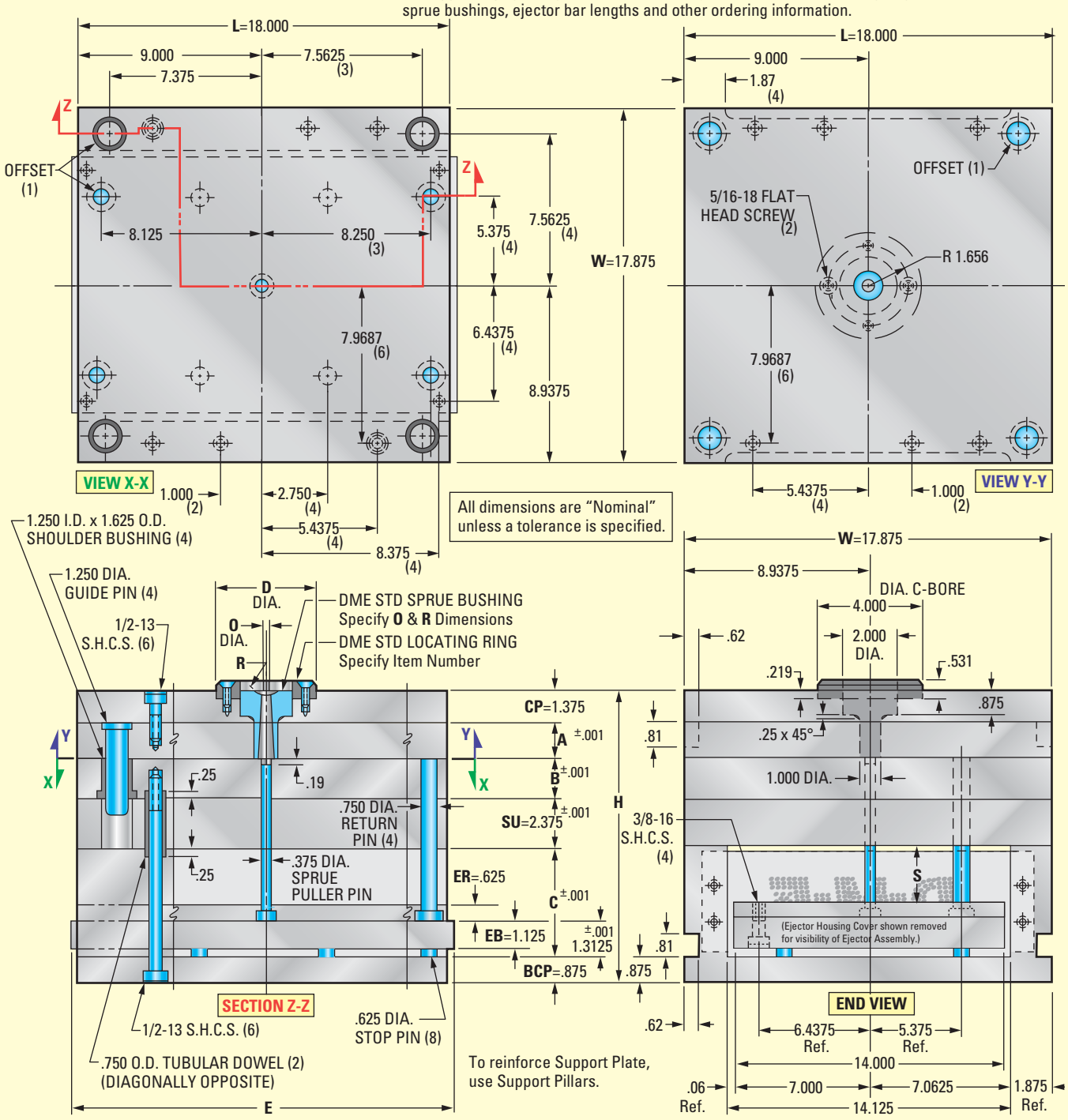

Mold Base Selections

A-Series Assembly

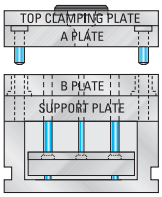

B-Series Assembly

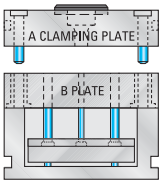

(For X-Series Stripper Plate, AX-Series and T-Series Mold Bases, see pages 173-198.)

Steel Configurations available in:

No. 1 Steel Assembly

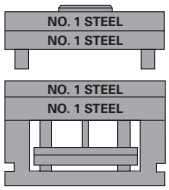

No. 2 Steel Assembly

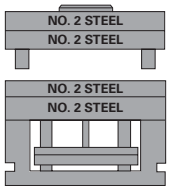

No. 3 Steel Assembly

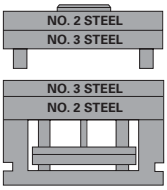

No. 7 Steel Assembly

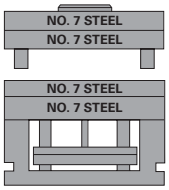

Other steel combinations also available. (Ejector Plates and Housings are No. 1 Steel, unless otherwise specified.) For additional Steel information, see page 42.

17⁷/₈ x 18" A-Series Mold Bases

A	B	C	H	ASSEMBLY ITEM NO.	NET WT.
1.375 (1-3/8)	1.375	3.000	10.375	1818A-13-13	850
	1.875	3.000	10.875	1818A-13-17	985
	2.375	3.500	11.875	1818A-13-23	951
	2.875	3.500	12.375	1818A-13-27	996
	3.375	4.000	13.375	1818A-13-33	1051
	3.875	4.000	13.875	1818A-13-37	1097
	4.875	4.500	15.375	1818A-13-47	1198
	5.875	4.500	16.375	1818A-13-57	1289

A	B	C	H	ASSEMBLY ITEM NO.	NET WT.
2.875 (2-7/8)	1.375	3.500	12.375	1818A-27-13	996
	1.875	3.500	12.875	1818A-27-17	1042
	2.375	3.500	13.375	1818A-27-23	107
	2.875	4.000	14.375	1818A-27-27	1142
	3.375	4.000	14.875	1818A-27-33	1188
	3.875	4.000	15.375	1818A-27-37	1234
	4.875	4.500	16.875	1818A-27-47	1334
	5.875	4.500	17.875	1818A-27-57	1426

A	B	C	H	ASSEMBLY ITEM NO.	NET WT.
4.875 (4-7/8)	1.375	4.000	14.875	1818A-47-13	1188
	1.875	4.000	15.375	1818A-47-17	1234
	2.375	4.500	16.375	1818A-47-23	1289
	2.875	4.500	16.875	1818A-47-27	1334
	3.375	4.500	17.375	1818A-47-33	1380
	3.875	4.500	17.875	1818A-47-37	1426
	4.875	4.500	18.875	1818A-47-47	1517
	5.875	4.500	19.875	1818A-47-57	1608

A	B	C	H	ASSEMBLY ITEM NO.	NET WT.
1.875 (1-7/8)	1.375	3.000	10.875	1818A-17-13	895
	1.875	3.000	11.375	1818A-17-17	941
	2.375	3.500	12.375	1818A-17-23	996
	2.875	3.500	12.875	1818A-17-27	1042
	3.375	4.000	13.875	1818A-17-33	1097
	3.875	4.000	14.375	1818A-17-37	1142
	4.875	4.500	15.875	1818A-17-47	1243
	5.875	4.500	16.875	1818A-17-57	1334

A	B	C	H	ASSEMBLY ITEM NO.	NET WT.
3.375 (3-3/8)	1.375	4.000	13.375	1818A-33-13	1051
	1.875	4.000	13.875	1818A-33-17	1097
	2.375	4.000	14.375	1818A-33-23	1142
	2.875	4.500	15.375	1818A-33-27	1198
	3.375	4.500	15.875	1818A-33-33	1243
	3.875	4.500	16.375	1818A-33-37	1289
	4.875	4.500	17.375	1818A-33-47	1380
	5.875	4.500	18.375	1818A-33-57	1471

A	B	C	H	ASSEMBLY ITEM NO.	NET WT.
5.875 (5-7/8)	1.375	4.000	15.875	1818A-57-13	1279
	1.875	4.500	16.875	1818A-57-17	1334
	2.375	4.500	17.375	1818A-57-23	1380
	2.875	4.500	17.875	1818A-57-27	1426
	3.375	4.500	18.375	1818A-57-33	1471
	3.875	4.500	18.875	1818A-57-37	1517
	4.875	4.500	19.875	1818A-57-47	1608
	5.875	4.500	20.875	1818A-57-57	1699

A	B	C	H	ASSEMBLY ITEM NO.	NET WT.
2.375 (2-3/8)	1.375	3.500	11.875	1818A-23-13	951
	1.875	3.500	12.375	1818A-23-17	996
	2.375	3.500	12.875	1818A-23-23	1042
	2.875	4.000	13.875	1818A-23-27	1097
	3.375	4.000	14.375	1818A-23-33	1142
	3.875	4.000	14.875	1818A-23-37	1188
	4.875	4.500	16.375	1818A-23-47	1289
	5.875	4.500	17.375	1818A-23-57	1380

A	B	C	H	ASSEMBLY ITEM NO.	NET WT.
3.875 (3-7/8)	1.375	4.000	13.875	1818A-37-13	1097
	1.875	4.000	14.375	1818A-37-17	1142
	2.375	4.500	15.375	1818A-37-23	1198
	2.875	4.500	15.875	1818A-37-27	1243
	3.375	4.500	16.375	1818A-37-33	1289
	3.875	4.500	16.875	1818A-37-37	1334
	4.875	4.500	17.875	1818A-37-47	1426
	5.875	4.500	18.875	1818A-37-57	1517

Other plate thickness, riser height and ejector bar length options available

CP TOP CLAMP PLATE THICKNESS	SU SUPPORT PLATE THICKNESS	BCP BOTTOM CLAMP PLATE THICKNESS	PLATE THICKNESS NO.
0.875	0.875	0.875	7
1.375	1.375	1.375	13
1.875	1.875	1.875	17
2.375	2.375	2.375	23
2.875	2.875	2.875	27
3.375	3.375	3.375	33
3.875	3.875	3.875	37
4.875	4.875	4.875	47
5.875	5.875	5.875	57

See Items 7 & 8 below.

C RISER		
C RISER HEIGHT	RISER HEIGHT NO.	S MAX. STROKE OF EJECTOR BAR
3.000	30	1.063
3.500	35	1.563
4.000	40	2.063
4.500	45	2.563
5.000	50	3.063
5.500	55	3.563
6.000	60	4.063

See Item 8 below.

EB EJECTOR BAR	
E LENGTH NOM.	EJECTOR BAR LENGTH NO.
17.97	18
19.97	20
23.47	23
25.97	26
29.47	29
35.47	35

See Item 6 below.

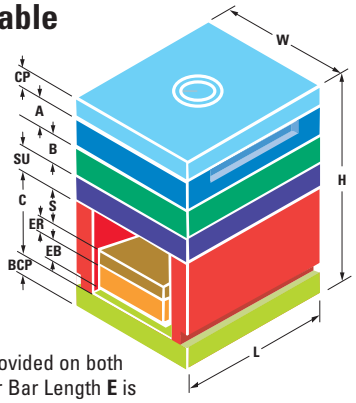

Ejector Housing Covers provided on both ends of mold when Ejector Bar Length **E** is nominal length of mold base. Customer to fabricate ejector housing covers for extended ejector bars.

WHEN ORDERING, PLEASE SPECIFY:

1. Quantity
2. Assembly Item Number (For "B" Series, replace "A" with "B")
3. Steel: #1, #2, #3 or #7 (for other steels, please specify)
4. Locating ring item number:
   Item No. 6501 (**D** = 3.990 Diameter of Locating Ring) standard
   Item No. 6504 (**D** = 3.990 Diameter of Locating Ring) clamp type
   (For other rings see DME Mold Components Catalog)
5. Type of sprue bushing, series letters: (i.e., B, etc.)
   O = Small dia. of sprue bushing orifice: .156, .218, .281 or .343
   R = Spherical radius of sprue bushing: .500 or .750
   (For sprue bushings see DME Mold Components Catalog)
6. Ejector Bar Length **E** (Ejector Bar Length at nominal length of mold base is highlighted in yellow. All other lengths provide an extended ejector bar)
7. Other **CP** Top Clamp Plate or **SU** Support Plate thicknesses as needed (Recommended thicknesses are highlighted in yellow)
8. Other **C** Riser heights as needed. Also, other **BCP** Bottom Clamp Plate thicknesses as needed. Riser height **C** and **BCP** Bottom Clamp Plate thicknesses which are highlighted in yellow are available in #1 Steel in a one-piece Welded Housing. Also, all Riser heights **C** and all **BCP** Bottom Clamp Plate thicknesses are available in #1 or #7 Steel in a Three-Piece Housing (for other steels, please specify)
9. Other features as needed (i.e. Guided Ejection, Lifting Holes, Pry Bar Slots, as well as Leader Pin, Return Pin, or Assembly Screw Relocations, etc.)
10. Method of shipment
    (For inch decimal to fractional conversion table, see page 278.)

17⁷/₈ x 20" A-Series Mold Bases

See opposite page for general dimensions, ejector stroke data, locating rings, sprue bushings, ejector bar lengths and other ordering information.

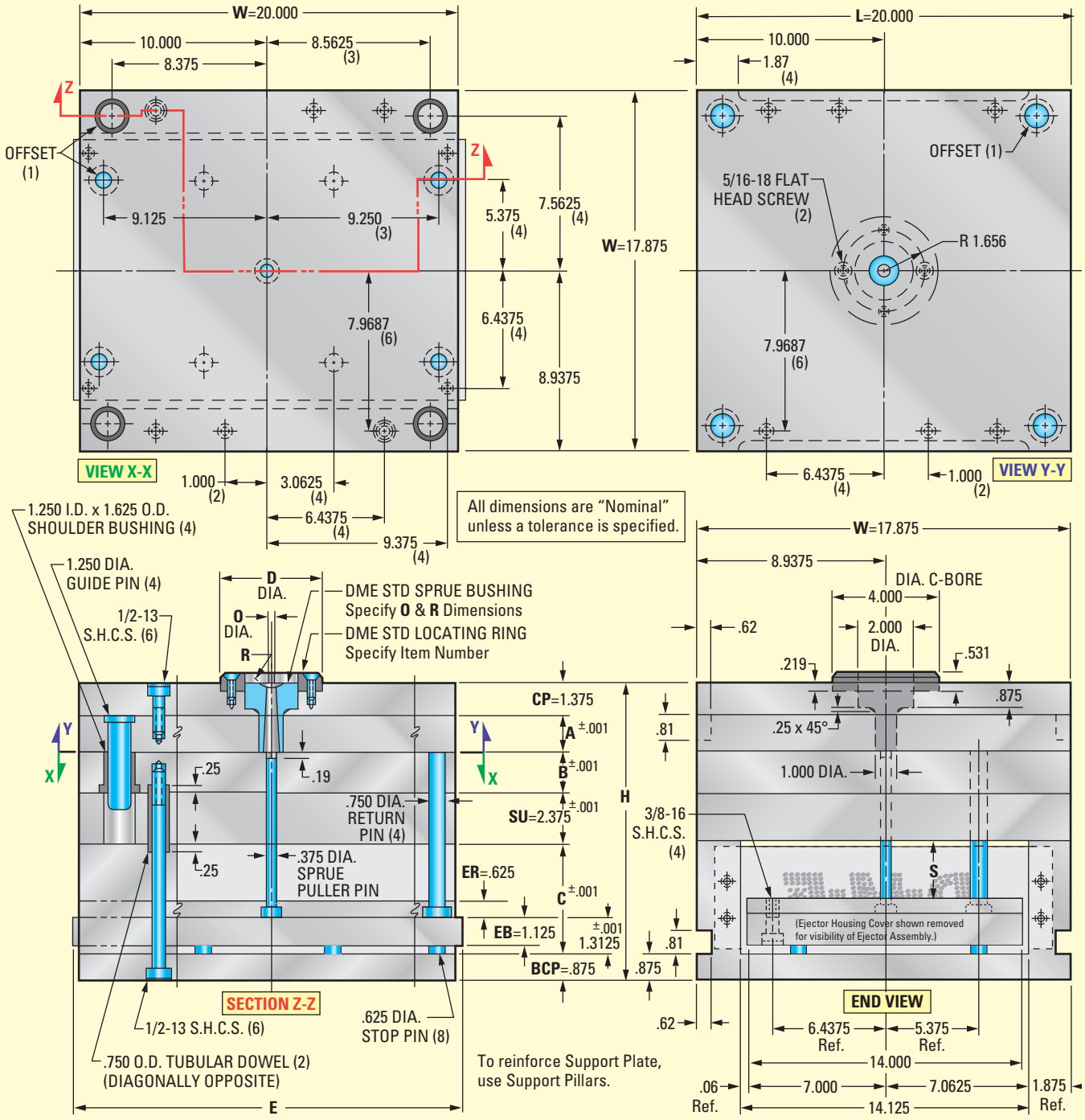

Mold Base Selections

A-Series Assembly

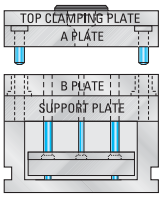

B-Series Assembly

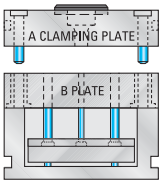

(For X-Series Stripper Plate, AX-Series and T-Series Mold Bases, see pages 173-198.)

Steel Configurations available in:

No. 1 Steel Assembly

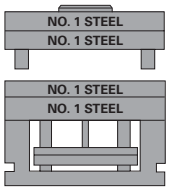

No. 2 Steel Assembly

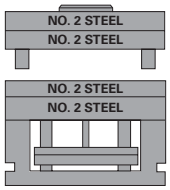

No. 3 Steel Assembly

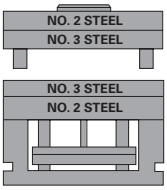

No. 7 Steel Assembly

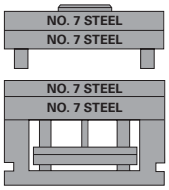

Other steel combinations also available. (Ejector Plates and Housings are No. 1 Steel, unless otherwise specified.) For additional Steel information, see page 42.

17 7/8 x 20" A-Series Mold Bases

A	B	C	H	ASSEMBLY ITEM NO.	NET WT.
1.375 (1-3/8)	1.375	3.000	10.375	1820A-13-13	944
	1.875	3.000	10.875	1820A-13-17	995
	2.375	3.500	11.875	1820A-13-23	1056
	2.875	3.500	12.375	1820A-13-27	1107
	3.375	4.000	13.375	1820A-13-33	1168
	3.875	4.000	13.875	1820A-13-37	1219
	4.875	4.500	15.375	1820A-13-47	1331
	5.875	4.500	16.375	1820A-13-57	1432

A	B	C	H	ASSEMBLY ITEM NO.	NET WT.
2.875 (2-7/8)	1.375	3.500	12.375	1820A-27-13	1107
	1.875	3.500	12.875	1820A-27-17	1157
	2.375	3.500	13.375	1820A-27-23	1208
	2.875	4.000	14.375	1820A-27-27	1269
	3.375	4.000	14.875	1820A-27-33	1320
	3.875	4.000	15.375	1820A-27-37	1371
	4.875	4.500	16.875	1820A-27-47	1483
	5.875	4.500	17.875	1820A-27-57	1584

A	B	C	H	ASSEMBLY ITEM NO.	NET WT.
4.875 (4-7/8)	1.375	4.000	14.875	1820A-47-13	1320
	1.875	4.000	15.375	1820A-47-17	1371
	2.375	4.500	16.375	1820A-47-23	1432
	2.875	4.500	16.875	1820A-47-27	1483
	3.375	4.500	17.375	1820A-47-33	1533
	3.875	4.500	17.875	1820A-47-37	1584
	4.875	4.500	18.875	1820A-47-47	1685
	5.875	4.500	19.875	1820A-47-57	1786

A	B	C	H	ASSEMBLY ITEM NO.	NET WT.
1.875 (1-7/8)	1.375	3.000	10.875	1820A-17-13	995
	1.875	3.000	11.375	1820A-17-17	1046
	2.375	3.500	12.375	1820A-17-23	1107
	2.875	3.500	12.875	1820A-17-27	1157
	3.375	4.000	13.875	1820A-17-33	1219
	3.875	4.000	14.375	1820A-17-37	1269
	4.875	4.500	15.875	1820A-17-47	1381
	5.875	4.500	16.875	1820A-17-57	1483

A	B	C	H	ASSEMBLY ITEM NO.	NET WT.
3.375 (3-3/8)	1.375	4.000	13.375	1820A-33-13	1168
	1.875	4.000	13.875	1820A-33-17	1219
	2.375	4.000	14.375	1820A-33-23	1269
	2.875	4.500	15.375	1820A-33-27	1331
	3.375	4.500	15.875	1820A-33-33	1381
	3.875	4.500	16.375	1820A-33-37	1432
	4.875	4.500	17.375	1820A-33-47	1533
	5.875	4.500	18.375	1820A-33-57	1634

A	B	C	H	ASSEMBLY ITEM NO.	NET WT.
5.875 (5-7/8)	1.375	4.000	15.875	1820A-57-13	1421
	1.875	4.500	16.875	1820A-57-17	1483
	2.375	4.500	17.375	1820A-57-23	1533
	2.875	4.500	17.875	1820A-57-27	1584
	3.375	4.500	18.375	1820A-57-33	1634
	3.875	4.500	18.875	1820A-57-37	1685
	4.875	4.500	19.875	1820A-57-47	1786
	5.875	4.500	20.875	1820A-57-57	1888

A	B	C	H	ASSEMBLY ITEM NO.	NET WT.
2.375 (2-3/8)	1.375	3.500	11.875	1820A-23-13	1056
	1.875	3.500	12.375	1820A-23-17	1107
	2.375	3.500	12.875	1820A-23-23	1157
	2.875	4.000	13.875	1820A-23-27	1219
	3.375	4.000	14.375	1820A-23-33	1269
	3.875	4.000	14.875	1820A-23-37	1320
	4.875	4.500	16.375	1820A-23-47	1432
	5.875	4.500	17.375	1820A-23-57	1533

A	B	C	H	ASSEMBLY ITEM NO.	NET WT.
3.875 (3-7/8)	1.375	4.000	13.875	1820A-37-13	1219
	1.875	4.000	14.375	1820A-37-17	1269
	2.375	4.500	15.375	1820A-37-23	1331
	2.875	4.500	15.875	1820A-37-27	1381
	3.375	4.500	16.375	1820A-37-33	1432
	3.875	4.500	16.875	1820A-37-37	1483
	4.875	4.500	17.875	1820A-37-47	1584
	5.875	4.500	18.875	1820A-37-57	1685

Other plate thickness, riser height and ejector bar length options available

CP TOP CLAMP PLATE THICKNESS	SU SUPPORT PLATE THICKNESS	BCP BOTTOM CLAMP PLATE THICKNESS	PLATE THICKNESS NO.
0.875	0.875	0.875	7
1.375	1.375	1.375	13
1.875	1.875	1.875	17
2.375	2.375	2.375	23
2.875	2.875	2.875	27
3.375	3.375	3.375	33
3.875	3.875	3.875	37
4.875	4.875	4.875	47
5.875	5.875	5.875	57

See Items 7 & 8 below.

C RISER		
C RISER HEIGHT	RISER HEIGHT NO.	S MAX. STROKE OF EJECTOR BAR
3.000	30	1.063
3.500	35	1.563
4.000	40	2.063
4.500	45	2.563
5.000	50	3.063
5.500	55	3.563
6.000	60	4.063

See Item 8 below.

EB EJECTOR BAR	
E LENGTH NOM.	EJECTOR BAR LENGTH NO.
19.97	20
23.47	23
25.97	26
29.47	29
35.47	35

See Item 6 below.

Ejector Housing Covers provided on both ends of mold when Ejector Bar Length **E** is nominal length of mold base. Customer to fabricate ejector housing covers for extended ejector bars.

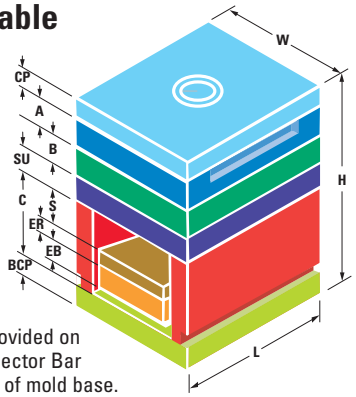

WHEN ORDERING, PLEASE SPECIFY:

1. Quantity
2. Assembly Item Number (For "B" Series, replace "A" with "B")
3. Steel: #1, #2, #3 or #7 (for other steels, please specify)
4. Locating ring item number:
   Item No. 6501 (**D** = 3.990 Diameter of Locating Ring) standard
   Item No. 6504 (**D** = 3.990 Diameter of Locating Ring) clamp type
   (For other rings see DME Mold Components Catalog)
5. Type of sprue bushing, series letters: (i.e., B, etc.)
   O = Small dia. of sprue bushing orifice: .156, .218, .281 or .343
   R = Spherical radius of sprue bushing: .500 or .750
   (For sprue bushings see DME Mold Components Catalog)
6. Ejector Bar Length **E** (Ejector Bar Length at nominal length of mold base is highlighted in yellow. All other lengths provide an extended ejector bar)
7. Other **CP** Top Clamp Plate or **SU** Support Plate thicknesses as needed (Recommended thicknesses are highlighted in yellow)
8. Other **C** Riser heights as needed. Also, other **BCP** Bottom Clamp Plate thicknesses as needed. Riser height **C** and **BCP** Bottom Clamp Plate thicknesses which are highlighted in yellow are available in #1 Steel in a one-piece Welded Housing. Also, all Riser heights **C** and all **BCP** Bottom Clamp Plate thicknesses are available in #1 or #7 Steel in a Three-Piece Housing (for other steels, please specify)
9. Other features as needed (i.e. Guided Ejection, Lifting Holes, Pry Bar Slots, as well as Leader Pin, Return Pin, or Assembly Screw Relocations, etc.)
10. Method of shipment
    (For inch decimal to fractional conversion table, see page 278.)

17 7/8 x 23 1/2 A-Series Mold Bases

See opposite page for general dimensions, ejector stroke data, locating rings, sprue bushings, ejector bar lengths and other ordering information.

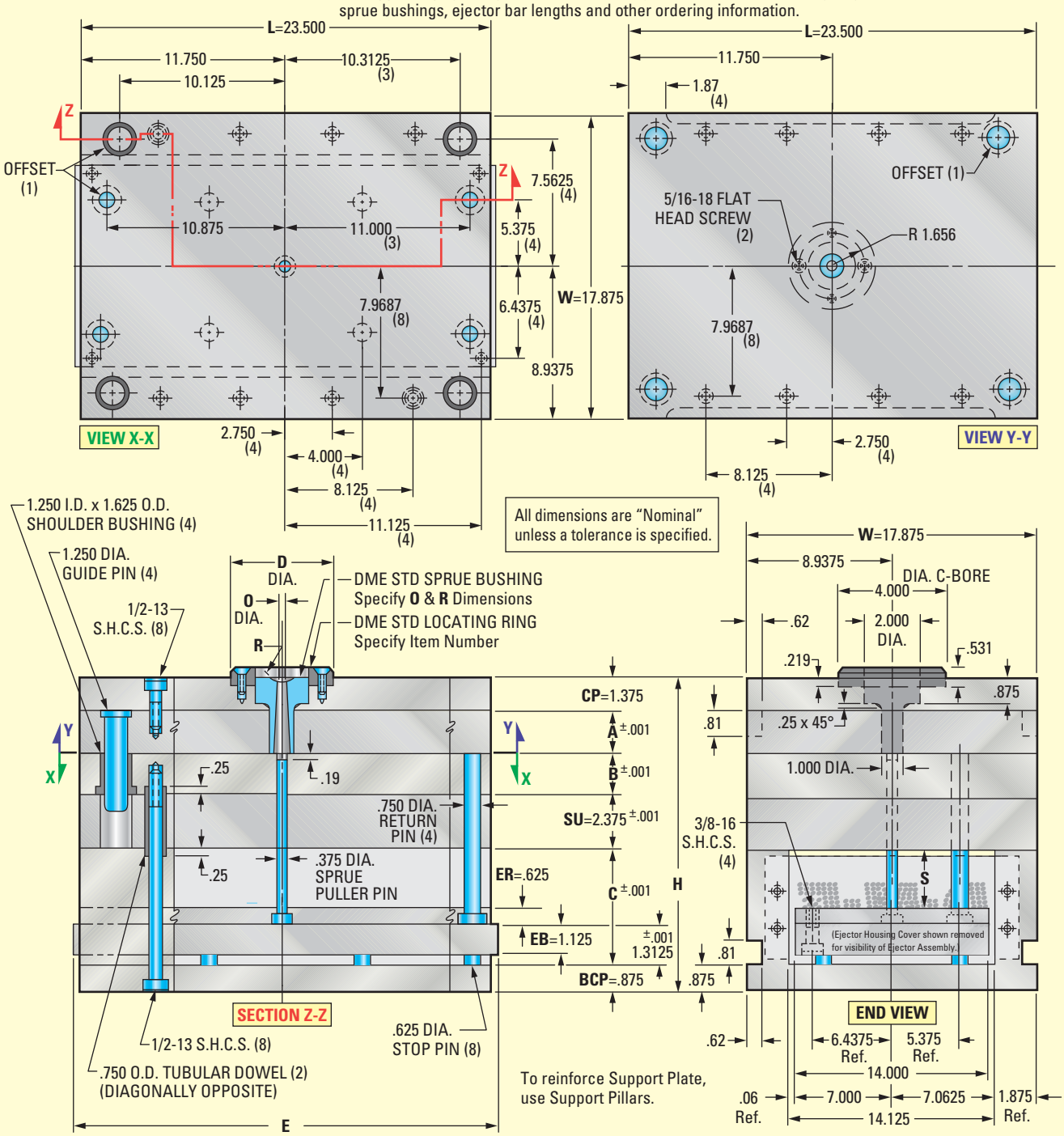

Mold Base Selections

A-Series Assembly

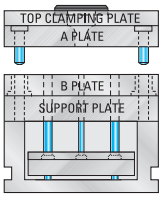

B-Series Assembly

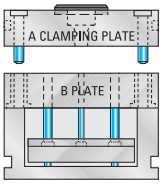

(For X-Series Stripper Plate, AX-Series and T-Series Mold Bases, see pages 173-198.)

Steel Configurations available in:

No. 1 Steel Assembly

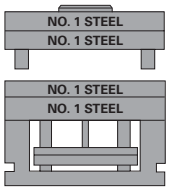

No. 2 Steel Assembly

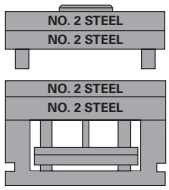

No. 3 Steel Assembly

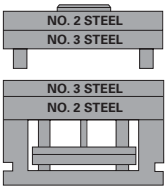

No. 7 Steel Assembly

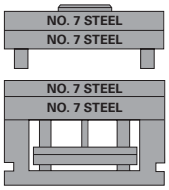

Other steel combinations also available. (Ejector Plates and Housings are No. 1 Steel, unless otherwise specified.) For additional Steel information, see page 42.

17⁷/₈ x 23¹/₂ A-Series Mold Bases

A	B	C	H	ASSEMBLY ITEM NO.	NET WT.
1.375 (1-3/8)	1.375	3.000	10.375	1823A-13-13	1109
	1.875	3.000	10.875	1823A-13-17	1169
	2.375	3.500	11.875	1823A-13-23	1241
	2.875	3.500	12.375	1823A-13-27	1300
	3.375	4.000	13.375	1823A-13-33	1372
	3.875	4.000	13.875	1823A-13-37	1432
	4.875	4.500	15.375	1823A-13-47	1563
	5.875	4.500	16.375	1823A-13-57	1682

A	B	C	H	ASSEMBLY ITEM NO.	NET WT.
2.875 (2-7/8)	1.375	3.500	12.375	1823A-27-13	1300
	1.875	3.500	12.875	1823A-27-17	1360
	2.375	3.500	13.375	1823A-27-23	1419
	2.875	4.000	14.375	1823A-27-27	1491
	3.375	4.000	14.875	1823A-27-33	1551
	3.875	4.000	15.375	1823A-27-37	1610
	4.875	4.500	16.875	1823A-27-47	1742
	5.875	4.500	17.875	1823A-27-57	1861

A	B	C	H	ASSEMBLY ITEM NO.	NET WT.
4.875 (4-7/8)	1.375	4.000	14.875	1823A-47-13	1551
	1.875	4.000	15.375	1823A-47-17	1610
	2.375	4.500	16.375	1823A-47-23	1682
	2.875	4.500	16.875	1823A-47-27	1742
	3.375	4.500	17.375	1823A-47-33	1801
	3.875	4.500	17.875	1823A-47-37	1861
	4.875	4.500	18.875	1823A-47-47	1980
	5.875	4.500	19.875	1823A-47-57	2099

A	B	C	H	ASSEMBLY ITEM NO.	NET WT.
1.875 (1-7/8)	1.375	3.000	10.875	1823A-17-13	1169
	1.875	3.000	11.375	1823A-17-17	1228
	2.375	3.500	12.375	1823A-17-23	1300
	2.875	3.500	12.875	1823A-17-27	1360
	3.375	4.000	13.875	1823A-17-33	1432
	3.875	4.000	14.375	1823A-17-37	1491
	4.875	4.500	15.875	1823A-17-47	1623
	5.875	4.500	16.875	1823A-17-57	1742

A	B	C	H	ASSEMBLY ITEM NO.	NET WT.
3.375 (3-3/8)	1.375	4.000	13.375	1823A-33-13	1372
	1.875	4.000	13.875	1823A-33-17	1432
	2.375	4.000	14.375	1823A-33-23	1491
	2.875	4.500	15.375	1823A-33-27	1563
	3.375	4.500	15.875	1823A-33-33	1623
	3.875	4.500	16.375	1823A-33-37	1682
	4.875	4.500	17.375	1823A-33-47	1801
	5.875	4.500	18.375	1823A-33-57	1920

A	B	C	H	ASSEMBLY ITEM NO.	NET WT.
5.875 (5-7/8)	1.375	4.000	15.875	1823A-57-13	1670
	1.875	4.500	16.875	1823A-57-17	1742
	2.375	4.500	17.375	1823A-57-23	1801
	2.875	4.500	17.875	1823A-57-27	1861
	3.375	4.500	18.375	1823A-57-33	1920
	3.875	4.500	18.875	1823A-57-37	1980
	4.875	4.500	19.875	1823A-57-47	2099
	5.875	4.500	20.875	1823A-57-57	2218

A	B	C	H	ASSEMBLY ITEM NO.	NET WT.
2.375 (2-3/8)	1.375	3.500	11.875	1823A-23-13	1241
	1.875	3.500	12.375	1823A-23-17	1300
	2.375	3.500	12.875	1823A-23-23	1360
	2.875	4.000	13.875	1823A-23-27	1432
	3.375	4.000	14.375	1823A-23-33	1491
	3.875	4.000	14.875	1823A-23-37	1551
	4.875	4.500	16.375	1823A-23-47	1682
	5.875	4.500	17.375	1823A-23-57	1801

A	B	C	H	ASSEMBLY ITEM NO.	NET WT.
3.875 (3-7/8)	1.375	4.000	13.875	1823A-37-13	1432
	1.875	4.000	14.375	1823A-37-17	1491
	2.375	4.500	15.375	1823A-37-23	1563
	2.875	4.500	15.875	1823A-37-27	1623
	3.375	4.500	16.375	1823A-37-33	1682
	3.875	4.500	16.875	1823A-37-37	1842
	4.875	4.500	17.875	1823A-37-47	1861
	5.875	4.500	18.875	1823A-37-57	1980

Other plate thickness, riser height and ejector bar length options available

CP TOP CLAMP PLATE THICKNESS	SU SUPPORT PLATE THICKNESS	BCP BOTTOM CLAMP PLATE THICKNESS	PLATE THICKNESS NO.
0.875	0.875	0.875	7
1.375	1.375	1.375	13
1.875	1.875	1.875	17
2.375	2.375	2.375	23
2.875	2.875	2.875	27
3.375	3.375	3.375	33
3.875	3.875	3.875	37
4.875	4.875	4.875	47
5.875	5.875	5.875	57

See Items 7 & 8 below.

C RISER		
C RISER HEIGHT	RISER HEIGHT NO.	S MAX. STROKE OF EJECTOR BAR
3.000	30	1.063
3.500	35	1.563
4.000	40	2.063
4.500	45	2.563
5.000	50	3.063
5.500	55	3.563
6.000	60	4.063

See Item 8 below.

EB EJECTOR BAR	
E LENGTH NOM.	EJECTOR BAR LENGTH NO.
23.47	23
25.97	26
29.47	29
35.47	35

See Item 6 below.

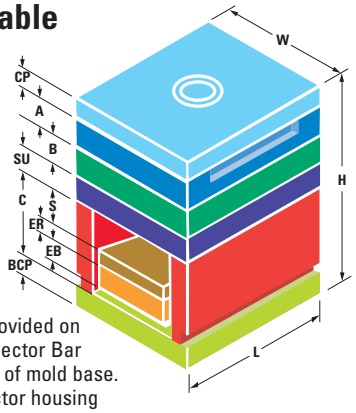

Ejector Housing Covers provided on both ends of mold when Ejector Bar Length **E** is nominal length of mold base. Customer to fabricate ejector housing covers for extended ejector bars.

WHEN ORDERING, PLEASE SPECIFY:

1. Quantity
2. Assembly Item Number (For "B" Series, replace "A" with "B")
3. Steel: #1, #2, #3 or #7 (for other steels, please specify)
4. Locating ring item number:
   Item No. 6501 (**D** = 3.990 Diameter of Locating Ring) standard
   Item No. 6504 (**D** = 3.990 Diameter of Locating Ring) clamp type
   (For other rings see DME Mold Components Catalog)
5. Type of sprue bushing, series letters: (i.e., B, etc.)
   O = Small dia. of sprue bushing orifice: .156, .218, .281 or .343
   R = Spherical radius of sprue bushing: .500 or .750
   (For sprue bushings see DME Mold Components Catalog)
6. Ejector Bar Length **E** (Ejector Bar Length at nominal length of mold base is highlighted in yellow. All other lengths provide an extended ejector bar)
7. Other **CP** Top Clamp Plate or **SU** Support Plate thicknesses as needed (Recommended thicknesses are highlighted in yellow)
8. Other **C** Riser heights as needed. Also, other **BCP** Bottom Clamp Plate thicknesses as needed. Riser height **C** and **BCP** Bottom Clamp Plate thicknesses which are highlighted in yellow are available in #1 Steel in a one-piece Welded Housing. Also, all Riser heights **C** and all **BCP** Bottom Clamp Plate thicknesses are available in #1 or #7 Steel in a Three-Piece Housing (for other steels, please specify)
9. Other features as needed (i.e. Guided Ejection, Lifting Holes, Pry Bar Slots, as well as Leader Pin, Return Pin, or Assembly Screw Relocations, etc.)
10. Method of shipment
    (For inch decimal to fractional conversion table, see page 278.)

17⁷/₈ x 26" A-Series Mold Bases

See opposite page for general dimensions, ejector stroke data, locating rings, sprue bushings, ejector bar lengths and other ordering information.

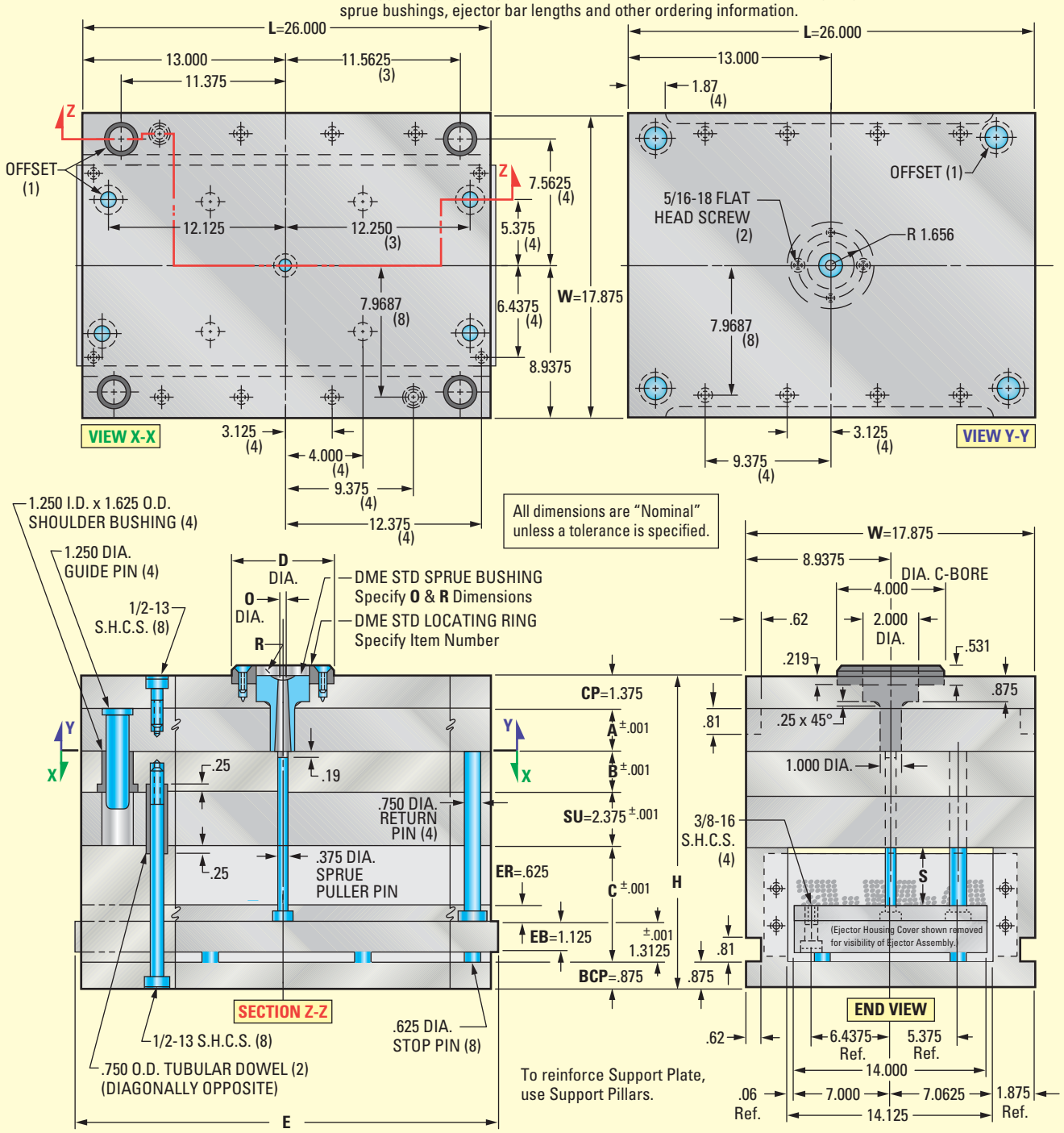

Mold Base Selections

A-Series Assembly

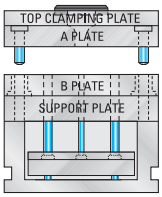

B-Series Assembly

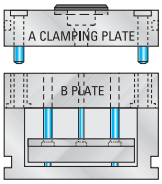

(For X-Series Stripper Plate, AX-Series and T-Series Mold Bases, see pages 173-198.)

Steel Configurations available in:

No. 1 Steel Assembly

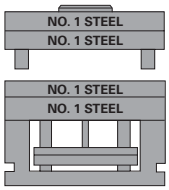

No. 2 Steel Assembly

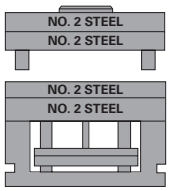

No. 3 Steel Assembly

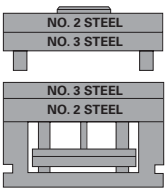

No. 7 Steel Assembly

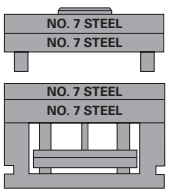

Other steel combinations also available. (Ejector Plates and Housings are No. 1 Steel, unless otherwise specified.) For additional Steel information, see page 42.

17⁷/₈ x 26" A-Series Mold Bases

A	B	C	H	ASSEMBLY ITEM NO.	NET WT.
1.375 (1-3/8)	1.375	3.000	10.375	1826A-13-13	1227
	1.875	3.000	10.875	1826A-13-17	1293
	2.375	3.500	11.875	1826A-13-23	1373
	2.875	3.500	12.375	1826A-13-27	1439
	3.375	4.000	13.375	1826A-13-33	1518
	3.875	4.000	13.875	1826A-13-37	1584
	4.875	4.500	15.375	1826A-13-47	1730
	5.875	4.500	16.375	1826A-13-57	1861

A	B	C	H	ASSEMBLY ITEM NO.	NET WT.
2.875 (2-7/8)	1.375	3.500	12.375	1826A-27-13	1439
	1.875	3.500	12.875	1826A-27-17	1504
	2.375	3.500	13.375	1826A-27-23	1570
	2.875	4.000	14.375	1826A-27-27	1650
	3.375	4.000	14.875	1826A-27-33	1716
	3.875	4.000	15.375	1826A-27-37	1782
	4.875	4.500	16.875	1826A-27-47	1927
	5.875	4.500	17.875	1826A-27-57	2059

A	B	C	H	ASSEMBLY ITEM NO.	NET WT.
4.875 (4-7/8)	1.375	4.000	14.875	1826A-47-13	1716
	1.875	4.000	15.375	1826A-47-17	1782
	2.375	4.500	16.375	1826A-47-23	1861
	2.875	4.500	16.875	1826A-47-27	1927
	3.375	4.500	17.375	1826A-47-33	1993
	3.875	4.500	17.875	1826A-47-37	2059
	4.875	4.500	18.875	1826A-47-47	2190
	5.875	4.500	19.875	1826A-47-57	2322

A	B	C	H	ASSEMBLY ITEM NO.	NET WT.
1.875 (1-7/8)	1.375	3.000	10.875	1826A-17-13	1293
	1.875	3.000	11.375	1826A-17-17	1359
	2.375	3.500	12.375	1826A-17-23	1439
	2.875	3.500	12.875	1826A-17-27	1504
	3.375	4.000	13.875	1826A-17-33	1584
	3.875	4.000	14.375	1826A-17-37	1650
	4.875	4.500	15.875	1826A-17-47	1795
	5.875	4.500	16.875	1826A-17-57	1927

A	B	C	H	ASSEMBLY ITEM NO.	NET WT.
3.375 (3-3/8)	1.375	4.000	13.375	1826A-33-13	1518
	1.875	4.000	13.875	1826A-33-17	1584
	2.375	4.000	14.375	1826A-33-23	1650
	2.875	4.500	15.375	1826A-33-27	1730
	3.375	4.500	15.875	1826A-33-33	1795
	3.875	4.500	16.375	1826A-33-37	1861
	4.875	4.500	17.375	1826A-33-47	1993
	5.875	4.500	18.375	1826A-33-57	2125

A	B	C	H	ASSEMBLY ITEM NO.	NET WT.
5.875 (5-7/8)	1.375	4.000	15.875	1826A-57-13	1847
	1.875	4.500	16.875	1826A-57-17	1927
	2.375	4.500	17.375	1826A-57-23	1993
	2.875	4.500	17.875	1826A-57-27	2059
	3.375	4.500	18.375	1826A-57-33	2125
	3.875	4.500	18.875	1826A-57-37	2190
	4.875	4.500	19.875	1826A-57-47	2322
	5.875	4.500	20.875	1826A-57-57	2454

A	B	C	H	ASSEMBLY ITEM NO.	NET WT.
2.375 (2-3/8)	1.375	3.500	11.875	1826A-23-13	1373
	1.875	3.500	12.375	1826A-23-17	1439
	2.375	3.500	12.875	1826A-23-23	1504
	2.875	4.000	13.875	1826A-23-27	1584
	3.375	4.000	14.375	1826A-23-33	1650
	3.875	4.000	14.875	1826A-23-37	1716
	4.875	4.500	16.375	1826A-23-47	1861
	5.875	4.500	17.375	1826A-23-57	1993

A	B	C	H	ASSEMBLY ITEM NO.	NET WT.
3.875 (3-7/8)	1.375	4.000	13.875	1826A-37-13	1584
	1.875	4.000	14.375	1826A-37-17	1650
	2.375	4.500	15.375	1826A-37-23	1730
	2.875	4.500	15.875	1826A-37-27	1795
	3.375	4.500	16.375	1826A-37-33	1861
	3.875	4.500	16.875	1826A-37-37	1927
	4.875	4.500	17.875	1826A-37-47	2059
	5.875	4.500	18.875	1826A-37-57	2190

Other plate thickness, riser height and ejector bar length options available

CP TOP CLAMP PLATE THICKNESS	SU SUPPORT PLATE THICKNESS	BCP BOTTOM CLAMP PLATE THICKNESS	PLATE THICKNESS NO.
0.875	0.875	0.875	7
1.375	1.375	1.375	13
1.875	1.875	1.875	17
2.375	2.375	2.375	23
2.875	2.875	2.875	27
3.375	3.375	3.375	33
3.875	3.875	3.875	37
4.875	4.875	4.875	47
5.875	5.875	5.875	57

See Items 7 & 8 below.

C RISER		
C RISER HEIGHT	RISER HEIGHT NO.	S MAX. STROKE OF EJECTOR BAR
3.000	30	1.063
3.500	35	1.563
4.000	40	2.063
4.500	45	2.563
5.000	50	3.063
5.500	55	3.563
6.000	60	4.063

See Item 8 below.

EB EJECTOR BAR	
E LENGTH NOM.	EJECTOR BAR LENGTH NO.
25.97	26
29.47	29
35.47	35

See Item 6 below.

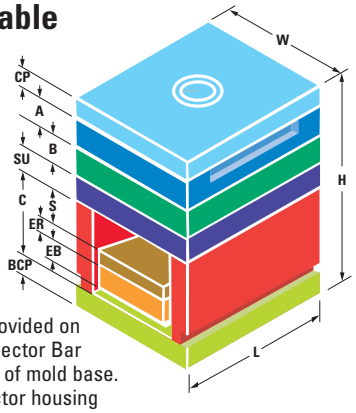

Ejector Housing Covers provided on both ends of mold when Ejector Bar Length **E** is nominal length of mold base. Customer to fabricate ejector housing covers for extended ejector bars.

WHEN ORDERING, PLEASE SPECIFY:

1. Quantity
2. Assembly Item Number (For "B" Series, replace "A" with "B")
3. Steel: #1, #2, #3 or #7 (for other steels, please specify)
4. Locating ring item number:
   Item No. 6501 (**D** = 3.990 Diameter of Locating Ring) standard
   Item No. 6504 (**D** = 3.990 Diameter of Locating Ring) clamp type
   (For other rings see DME Mold Components Catalog)
5. Type of sprue bushing, series letters: (i.e., B, etc.)
   O = Small dia. of sprue bushing orifice: .156, .218, .281 or .343
   R = Spherical radius of sprue bushing: .500 or .750
   (For sprue bushings see DME Mold Components Catalog)
6. Ejector Bar Length **E** (Ejector Bar Length at nominal length of mold base is highlighted in yellow. All other lengths provide an extended ejector bar)
7. Other **CP** Top Clamp Plate or **SU** Support Plate thicknesses as needed (Recommended thicknesses are highlighted in yellow)
8. Other **C** Riser heights as needed. Also, other **BCP** Bottom Clamp Plate thicknesses as needed. Riser height **C** and **BCP** Bottom Clamp Plate thicknesses which are highlighted in yellow are available in #1 Steel in a one-piece Welded Housing. Also, all Riser heights **C** and all **BCP** Bottom Clamp Plate thicknesses are available in #1 or #7 Steel in a Three-Piece Housing (for other steels, please specify)
9. Other features as needed (i.e. Guided Ejection, Lifting Holes, Pry Bar Slots, as well as Leader Pin, Return Pin, or Assembly Screw Relocations, etc.)
10. Method of shipment
    (For inch decimal to fractional conversion table, see page 278.)

17⁷/₈ x 29¹/₂ A-Series Mold Bases

See opposite page for general dimensions, ejector stroke data, locating rings, sprue bushings, ejector bar lengths and other ordering information.

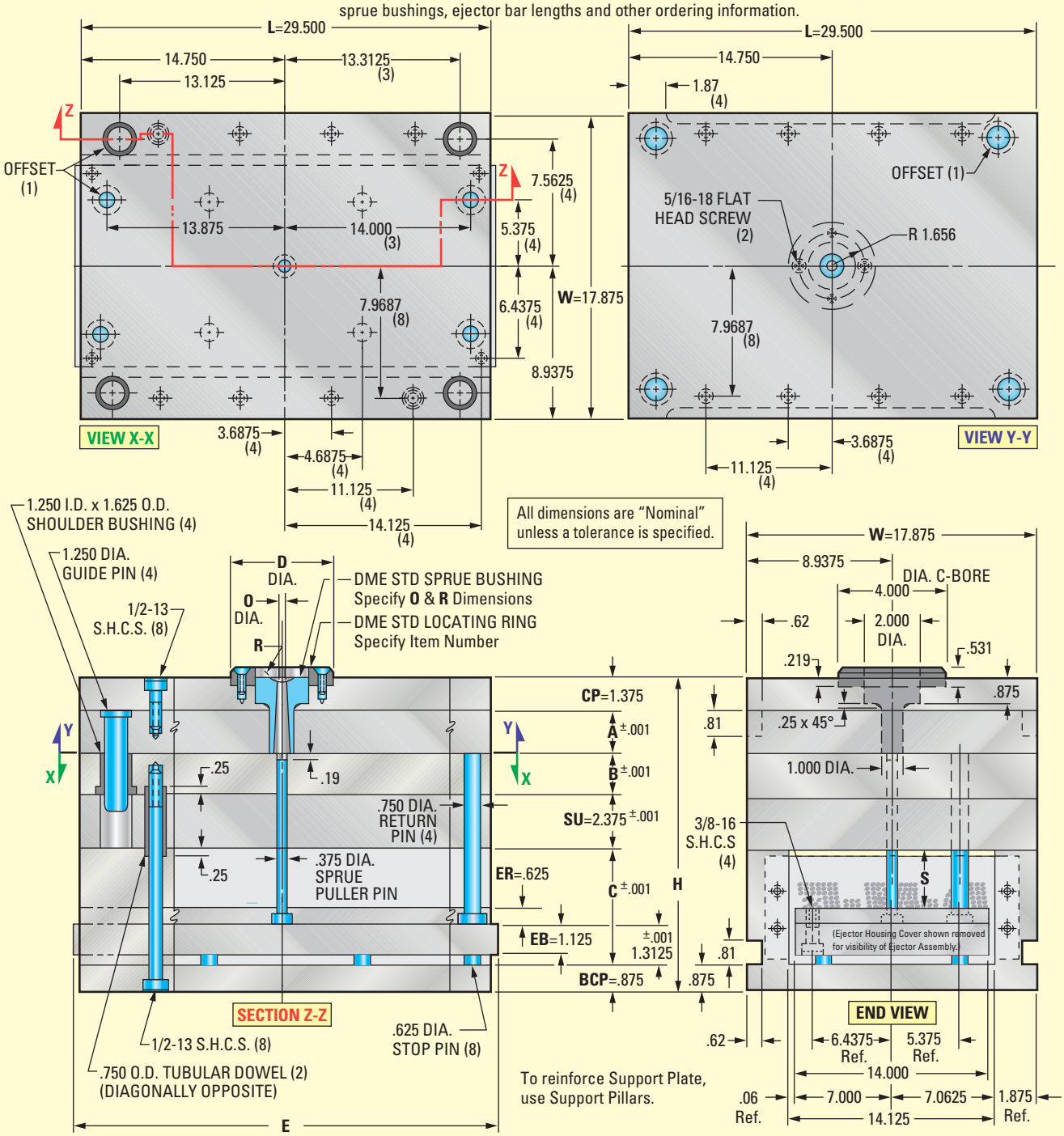

Mold Base Selections

A-Series Assembly

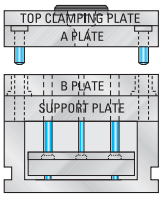

B-Series Assembly

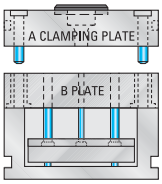

(For X-Series Stripper Plate, AX-Series and T-Series Mold Bases, see pages 173-198.)

Steel Configurations available in:

No. 1 Steel Assembly

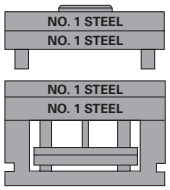

No. 2 Steel Assembly

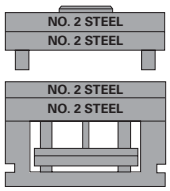

No. 3 Steel Assembly

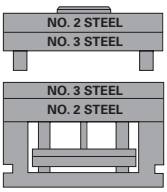

No. 7 Steel Assembly

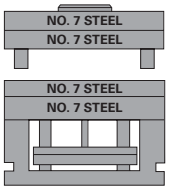

Other steel combinations also available. (Ejector Plates and Housings are No. 1 Steel, unless otherwise specified.) For additional Steel information, see page 42.

17 7/8 x 29 1/2 A-Series Mold Bases

A	B	C	H	ASSEMBLY ITEM NO.	NET WT.
1.375 (1-3/8)	1.375	3.000	10.375	1829A-13-13	1392
	1.875	3.000	10.875	1829A-13-17	1467
	2.375	3.500	11.875	1829A-13-23	1558
	2.875	3.500	12.375	1829A-13-27	1632
	3.375	4.000	13.375	1829A-13-33	1723
	3.875	4.000	13.875	1829A-13-37	1797
	4.875	4.500	15.375	1829A-13-47	1962
	5.875	4.500	16.375	1829A-13-57	2112

A	B	C	H	ASSEMBLY ITEM NO.	NET WT.
2.875 (2-7/8)	1.375	3.500	12.375	1829A-27-13	1632
	1.875	3.500	12.875	1829A-27-17	1707
	2.375	3.500	13.375	1829A-27-23	1782
	2.875	4.000	14.375	1829A-27-27	1872
	3.375	4.000	14.875	1829A-27-33	1947
	3.875	4.000	15.375	1829A-27-37	2021
	4.875	4.500	16.875	1829A-27-47	2186
	5.875	4.500	17.875	1829A-27-57	2336

A	B	C	H	ASSEMBLY ITEM NO.	NET WT.
4.875 (4-7/8)	1.375	4.000	14.875	1829A-47-13	1947
	1.875	4.000	15.375	1829A-47-17	2021
	2.375	4.500	16.375	1829A-47-23	2112
	2.875	4.500	16.875	1829A-47-27	2186
	3.375	4.500	17.375	1829A-47-33	2261
	3.875	4.500	17.875	1829A-47-37	2336
	4.875	4.500	18.875	1829A-47-47	2485
	5.875	4.500	19.875	1829A-47-57	2635

A	B	C	H	ASSEMBLY ITEM NO.	NET WT.
1.875 (1-7/8)	1.375	3.000	10.875	1829A-17-13	1467
	1.875	3.000	11.375	1829A-17-17	1542
	2.375	3.500	12.375	1829A-17-23	1632
	2.875	3.500	12.875	1829A-17-27	1707
	3.375	4.000	13.875	1829A-17-33	1797
	3.875	4.000	14.375	1829A-17-37	1872
	4.875	4.500	15.875	1829A-17-47	2037
	5.875	4.500	16.875	1829A-17-57	2186

A	B	C	H	ASSEMBLY ITEM NO.	NET WT.
3.375 (3-3/8)	1.375	4.000	13.375	1829A-33-13	1723
	1.875	4.000	13.875	1829A-33-17	1797
	2.375	4.000	14.375	1829A-33-23	1872
	2.875	4.500	15.375	1829A-33-27	1962
	3.375	4.500	15.875	1829A-33-33	2037
	3.875	4.500	16.375	1829A-33-37	2112
	4.875	4.500	17.375	1829A-33-47	2261
	5.875	4.500	18.375	1829A-33-57	2410

A	B	C	H	ASSEMBLY ITEM NO.	NET WT.
5.875 (5-7/8)	1.375	4.000	15.875	1829A-57-13	2096
	1.875	4.500	16.875	1829A-57-17	2186
	2.375	4.500	17.375	1829A-57-23	2261
	2.875	4.500	17.875	1829A-57-27	2336
	3.375	4.500	18.375	1829A-57-33	2410
	3.875	4.500	18.875	1829A-57-37	2485
	4.875	4.500	19.875	1829A-57-47	2635
	5.875	4.500	20.875	1829A-57-57	2784

A	B	C	H	ASSEMBLY ITEM NO.	NET WT.
2.375 (2-3/8)	1.375	3.500	11.875	1829A-23-13	1558
	1.875	3.500	12.375	1829A-23-17	1632
	2.375	3.500	12.875	1829A-23-23	1707
	2.875	4.000	13.875	1829A-23-27	1797
	3.375	4.000	14.375	1829A-23-33	1872
	3.875	4.000	14.875	1829A-23-37	1947
	4.875	4.500	16.375	1829A-23-47	2112
	5.875	4.500	17.375	1829A-23-57	2261

A	B	C	H	ASSEMBLY ITEM NO.	NET WT.
3.875 (3-7/8)	1.375	4.000	13.875	1829A-37-13	1797
	1.875	4.000	14.375	1829A-37-17	1872
	2.375	4.500	15.375	1829A-37-23	1962
	2.875	4.500	15.875	1829A-37-27	2037
	3.375	4.500	16.375	1829A-37-33	2112
	3.875	4.500	16.875	1829A-37-37	2186
	4.875	4.500	17.875	1829A-37-47	2336
	5.875	4.500	18.875	1829A-37-57	2485

Other plate thickness, riser height and ejector bar length options available

CP TOP CLAMP PLATE THICKNESS	SU SUPPORT PLATE THICKNESS	BCP BOTTOM CLAMP PLATE THICKNESS	PLATE THICKNESS NO.
0.875	0.875	0.875	7
1.375	1.375	1.375	13
1.875	1.875	1.875	17
2.375	2.375	2.375	23
2.875	2.875	2.875	27
3.375	3.375	3.375	33
3.875	3.875	3.875	37
4.875	4.875	4.875	47
5.875	5.875	5.875	57

See Items 7 & 8 below.

C RISER		
C RISER HEIGHT	RISER HEIGHT NO.	S MAX. STROKE OF EJECTOR BAR
3.000	30	1.063
3.500	35	1.563
4.000	40	2.063
4.500	45	2.563
5.000	50	3.063
5.500	55	3.563
6.000	60	4.063

See Item 8 below.

EB EJECTOR BAR	
E LENGTH NOM.	EJECTOR BAR LENGTH NO.
29.47	29
35.47	35

See Item 6 below.

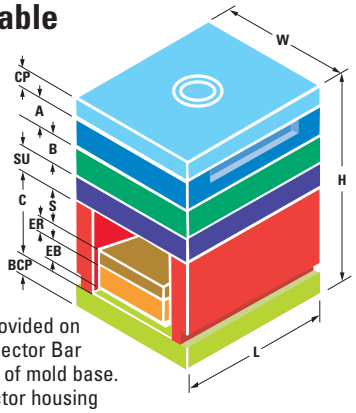

Ejector Housing Covers provided on both ends of mold when Ejector Bar Length **E** is nominal length of mold base. Customer to fabricate ejector housing covers for extended ejector bars.

WHEN ORDERING, PLEASE SPECIFY:

1. Quantity
2. Assembly Item Number (For "B" Series, replace "A" with "B")
3. Steel: #1, #2, #3 or #7 (for other steels, please specify)
4. Locating ring item number:
   Item No. 6501 (**D** = 3.990 Diameter of Locating Ring) standard
   Item No. 6504 (**D** = 3.990 Diameter of Locating Ring) clamp type
   (For other rings see DME Mold Components Catalog)
5. Type of sprue bushing, series letters: (i.e., B, etc.)
   O = Small dia. of sprue bushing orifice: .156, .218, .281 or .343
   R = Spherical radius of sprue bushing: .500 or .750
   (For sprue bushings see DME Mold Components Catalog)
6. Ejector Bar Length **E** (Ejector Bar Length at nominal length of mold base is highlighted in yellow. All other lengths provide an extended ejector bar)
7. Other **CP** Top Clamp Plate or **SU** Support Plate thicknesses as needed (Recommended thicknesses are highlighted in yellow)
8. Other **C** Riser heights as needed. Also, other **BCP** Bottom Clamp Plate thicknesses as needed. Riser height **C** and **BCP** Bottom Clamp Plate thicknesses which are highlighted in yellow are available in #1 Steel in a one-piece Welded Housing. Also, all Riser heights **C** and all **BCP** Bottom Clamp Plate thicknesses are available in #1 or #7 Steel in a Three-Piece Housing (for other steels, please specify)
9. Other features as needed (i.e. Guided Ejection, Lifting Holes, Pry Bar Slots, as well as Leader Pin, Return Pin, or Assembly Screw Relocations, etc.)
10. Method of shipment
    (For inch decimal to fractional conversion table, see page 278.)

17⁷/₈ x 35¹/₂ A-Series Mold Bases

See opposite page for general dimensions, ejector stroke data, locating rings, sprue bushings, ejector bar lengths and other ordering information.

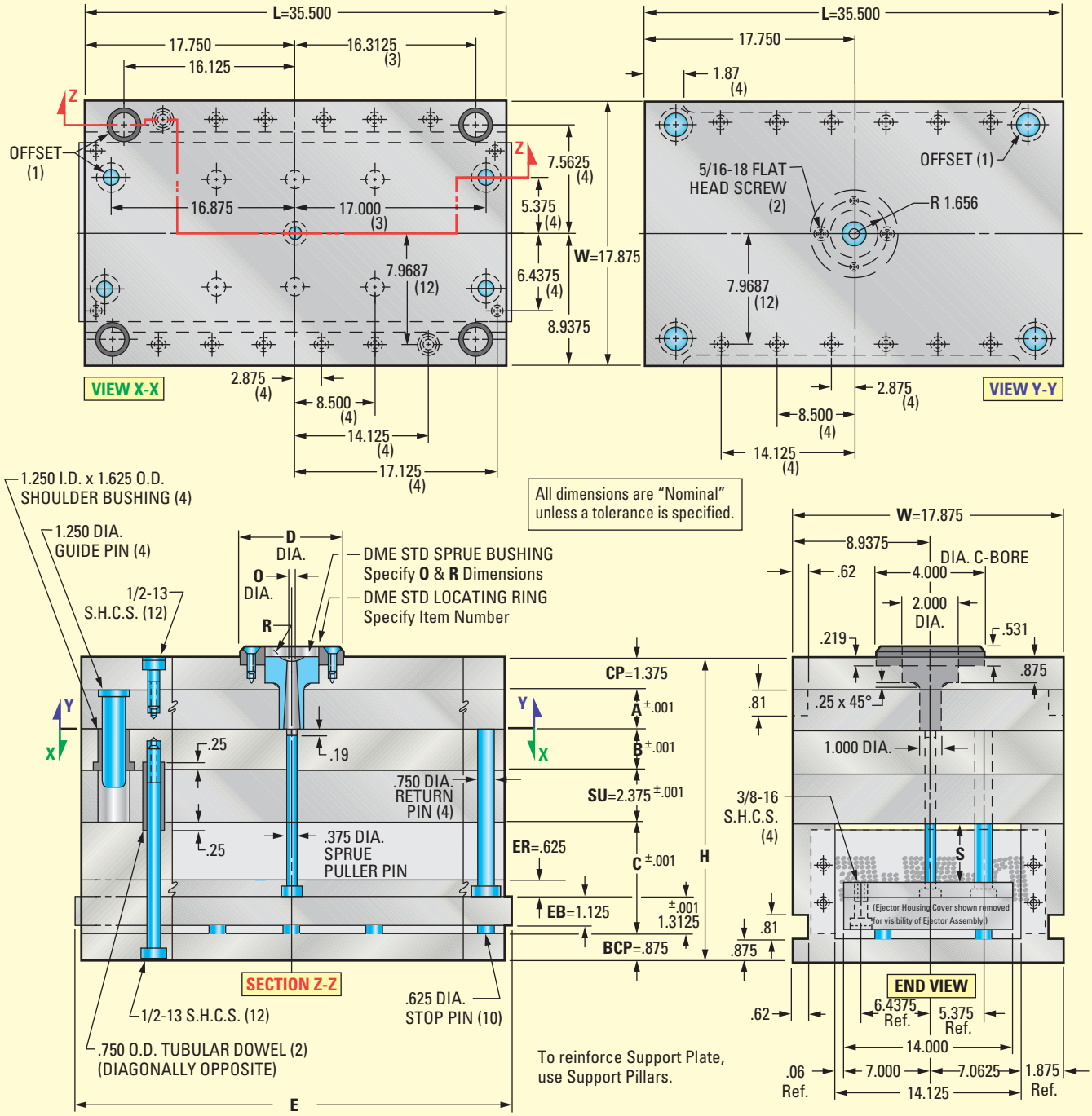

Mold Base Selections

A-Series Assembly

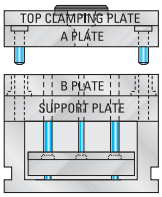

B-Series Assembly

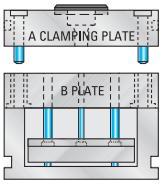

(For X-Series Stripper Plate, AX-Series and T-Series Mold Bases, see pages 173-198.)

Steel Configurations available in:

No. 1 Steel Assembly

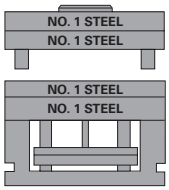

No. 2 Steel Assembly

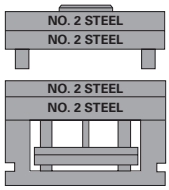

No. 3 Steel Assembly

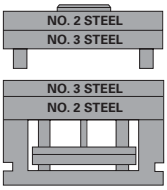

No. 7 Steel Assembly

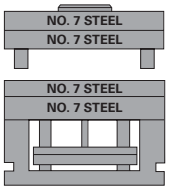

Other steel combinations also available. (Ejector Plates and Housings are No. 1 Steel, unless otherwise specified.) For additional Steel information, see page 42.

17⁷/₈ x 35¹/₂ A-Series Mold Bases

A	B	C	H	ASSEMBLY ITEM NO.	NET WT.
1.375 (1-3/8)	1.375	3.000	10.375	1835A-13-13	1676
	1.875	3.000	10.875	1835A-13-17	1766
	2.375	3.500	11.875	1835A-13-23	1874
	2.875	3.500	12.375	1835A-13-27	1964
	3.375	4.000	13.375	1835A-13-33	2073
	3.875	4.000	13.875	1835A-13-37	2163
	4.875	4.500	15.375	1835A-13-47	2361
	5.875	4.500	16.375	1835A-13-57	2541

A	B	C	H	ASSEMBLY ITEM NO.	NET WT.
2.875 (2-7/8)	1.375	3.500	12.375	1835A-27-13	1964
	1.875	3.500	12.875	1835A-27-17	2054
	2.375	3.500	13.375	1835A-27-23	2144
	2.875	4.000	14.375	1835A-27-27	2253
	3.375	4.000	14.875	1835A-27-33	2343
	3.875	4.000	15.375	1835A-27-37	2433
	4.875	4.500	16.875	1835A-27-47	2631
	5.875	4.500	17.875	1835A-27-57	2811

A	B	C	H	ASSEMBLY ITEM NO.	NET WT.
4.875 (4-7/8)	1.375	4.000	14.875	1835A-47-13	2343
	1.875	4.000	15.375	1835A-47-17	2433
	2.375	4.500	16.375	1835A-47-23	2541
	2.875	4.500	16.875	1835A-47-27	2631
	3.375	4.500	17.375	1835A-47-33	2721
	3.875	4.500	17.875	1835A-47-37	2811
	4.875	4.500	18.875	1835A-47-47	2991
	5.875	4.500	19.875	1835A-47-57	3170

A	B	C	H	ASSEMBLY ITEM NO.	NET WT.
1.875 (1-7/8)	1.375	3.000	10.875	1835A-17-13	1766
	1.875	3.000	11.375	1835A-17-17	1855
	2.375	3.500	12.375	1835A-17-23	1964
	2.875	3.500	12.875	1835A-17-27	2054
	3.375	4.000	13.875	1835A-17-33	2163
	3.875	4.000	14.375	1835A-17-37	2253
	4.875	4.500	15.875	1835A-17-47	2451
	5.875	4.500	16.875	1835A-17-57	2631

A	B	C	H	ASSEMBLY ITEM NO.	NET WT.
3.375 (3-3/8)	1.375	4.000	13.375	1835A-33-13	2073
	1.875	4.000	13.875	1835A-33-17	2163
	2.375	4.000	14.375	1835A-33-23	2253
	2.875	4.500	15.375	1835A-33-27	2361
	3.375	4.500	15.875	1835A-33-33	2451
	3.875	4.500	16.375	1835A-33-37	2541
	4.875	4.500	17.375	1835A-33-47	2721
	5.875	4.500	18.375	1835A-33-57	2901

A	B	C	H	ASSEMBLY ITEM NO.	NET WT.
5.875 (5-7/8)	1.375	4.000	15.875	1835A-57-13	2522
	1.875	4.500	16.875	1835A-57-17	2631
	2.375	4.500	17.375	1835A-57-23	2721
	2.875	4.500	17.875	1835A-57-27	2811
	3.375	4.500	18.375	1835A-57-33	2901
	3.875	4.500	18.875	1835A-57-37	2991
	4.875	4.500	19.875	1835A-57-47	3170
	5.875	4.500	20.875	1835A-57-57	3350

A	B	C	H	ASSEMBLY ITEM NO.	NET WT.
2.375 (2-3/8)	1.375	3.500	11.875	1835A-23-13	1874
	1.875	3.500	12.375	1835A-23-17	1964
	2.375	3.500	12.875	1835A-23-23	2054
	2.875	4.000	13.875	1835A-23-27	2163
	3.375	4.000	14.375	1835A-23-33	2253
	3.875	4.000	14.875	1835A-23-37	2343
	4.875	4.500	16.375	1835A-23-47	2541
	5.875	4.500	17.375	1835A-23-57	2721

A	B	C	H	ASSEMBLY ITEM NO.	NET WT.
3.875 (3-7/8)	1.375	4.000	13.875	1835A-37-13	2163
	1.875	4.000	14.375	1835A-37-17	2253
	2.375	4.500	15.375	1835A-37-23	2361
	2.875	4.500	15.875	1835A-37-27	2451
	3.375	4.500	16.375	1835A-37-33	2541
	3.875	4.500	16.875	1835A-37-37	2631
	4.875	4.500	17.875	1835A-37-47	2811
	5.875	4.500	18.875	1835A-37-57	2991

Other plate thickness, riser height and ejector bar length options available

CP TOP CLAMP PLATE THICKNESS	SU SUPPORT PLATE THICKNESS	BCP BOTTOM CLAMP PLATE THICKNESS	PLATE THICKNESS NO.
0.875	0.875	0.875	7
1.375	1.375	1.375	13
1.875	1.875	1.875	17
2.375	2.375	2.375	23
2.875	2.875	2.875	27
3.375	3.375	3.375	33
3.875	3.875	3.875	37
4.875	4.875	4.875	47
5.875	5.875	5.875	57

See Items 7 & 8 below.

C RISER		
C RISER HEIGHT	RISER HEIGHT NO.	S MAX. STROKE OF EJECTOR BAR
3.000	30	1.063
3.500	35	1.563
4.000	40	2.063
4.500	45	2.563
5.000	50	3.063
5.500	55	3.563
6.000	60	4.063

See Item 8 below.

EB EJECTOR BAR	
E LENGTH NOM.	EJECTOR BAR LENGTH NO.
35.47	35

See Item 6 below.

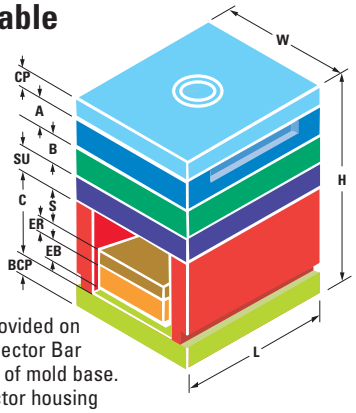

Ejector Housing Covers provided on both ends of mold when Ejector Bar Length **E** is nominal length of mold base. Customer to fabricate ejector housing covers for extended ejector bars.

WHEN ORDERING, PLEASE SPECIFY:

1. Quantity
2. Assembly Item Number (For "B" Series, replace "A" with "B")
3. Steel: #1, #2, #3 or #7 (for other steels, please specify)
4. Locating ring item number:
   Item No. 6501 (**D** = 3.990 Diameter of Locating Ring) standard
   Item No. 6504 (**D** = 3.990 Diameter of Locating Ring) clamp type
   (For other rings see DME Mold Components Catalog)
5. Type of sprue bushing, series letters: (i.e., B, etc.)
   O = Small dia. of sprue bushing orifice: .156, .218, .281 or .343
   R = Spherical radius of sprue bushing: .500 or .750
   (For sprue bushings see DME Mold Components Catalog)
6. Ejector Bar Length **E** (Ejector Bar Length at nominal length of mold base is highlighted in yellow. All other lengths provide an extended ejector bar)
7. Other **CP** Top Clamp Plate or **SU** Support Plate thicknesses as needed (Recommended thicknesses are highlighted in yellow)
8. Other **C** Riser heights as needed. Also, other **BCP** Bottom Clamp Plate thicknesses as needed. Riser height **C** and **BCP** Bottom Clamp Plate thicknesses which are highlighted in yellow are available in #1 Steel in a one-piece Welded Housing. Also, all Riser heights **C** and all **BCP** Bottom Clamp Plate thicknesses are available in #1 or #7 Steel in a Three-Piece Housing (for other steels, please specify)
9. Other features as needed (i.e. Guided Ejection, Lifting Holes, Pry Bar Slots, as well as Leader Pin, Return Pin, or Assembly Screw Relocations, etc.)
10. Method of shipment
    (For inch decimal to fractional conversion table, see page 278.)

DME A-Series Mold Bases

OVER 75 TRILLION POSSIBLE MOLD BASE CONFIGURATIONS

Table of Contents

88A....52-53
812A....54-55
108A....56-57
1012A....58-59
1016A....60-61
1020A....62-63
1112A....64-65
1114A....66-67
1118A....68-69
1123A....70-71
1212A....72-73
1215A....74-75
1220A....76-77
1223A....78-79
1315A....80-81
1318A....82-83
1321A....84-85
1323A....86-87
1326A....88-89
1329A....90-91
1518A....92-93
1524A....94-95
1529A....96-97
1616A....98-99
1620A....100-101
1623A....102-103
1626A....104-105
1629A....106-107
1635A....108-109
1724A....110-111
1729A....112-113
1818A....114-115
1820A....116-117
1823A....118-119
1826A....120-121
1829A....122-123
1835A....124-125
1924A....126-127
1929A....128-129
1935A....130-131
2424A....132-133
2429A....134-135
2435A....136-137
B-Series Mold Bases....138

19½ x 23¾ A-Series Mold Bases

See opposite page for general dimensions, ejector stroke data, locating rings, sprue bushings, ejector bar lengths and other ordering information.

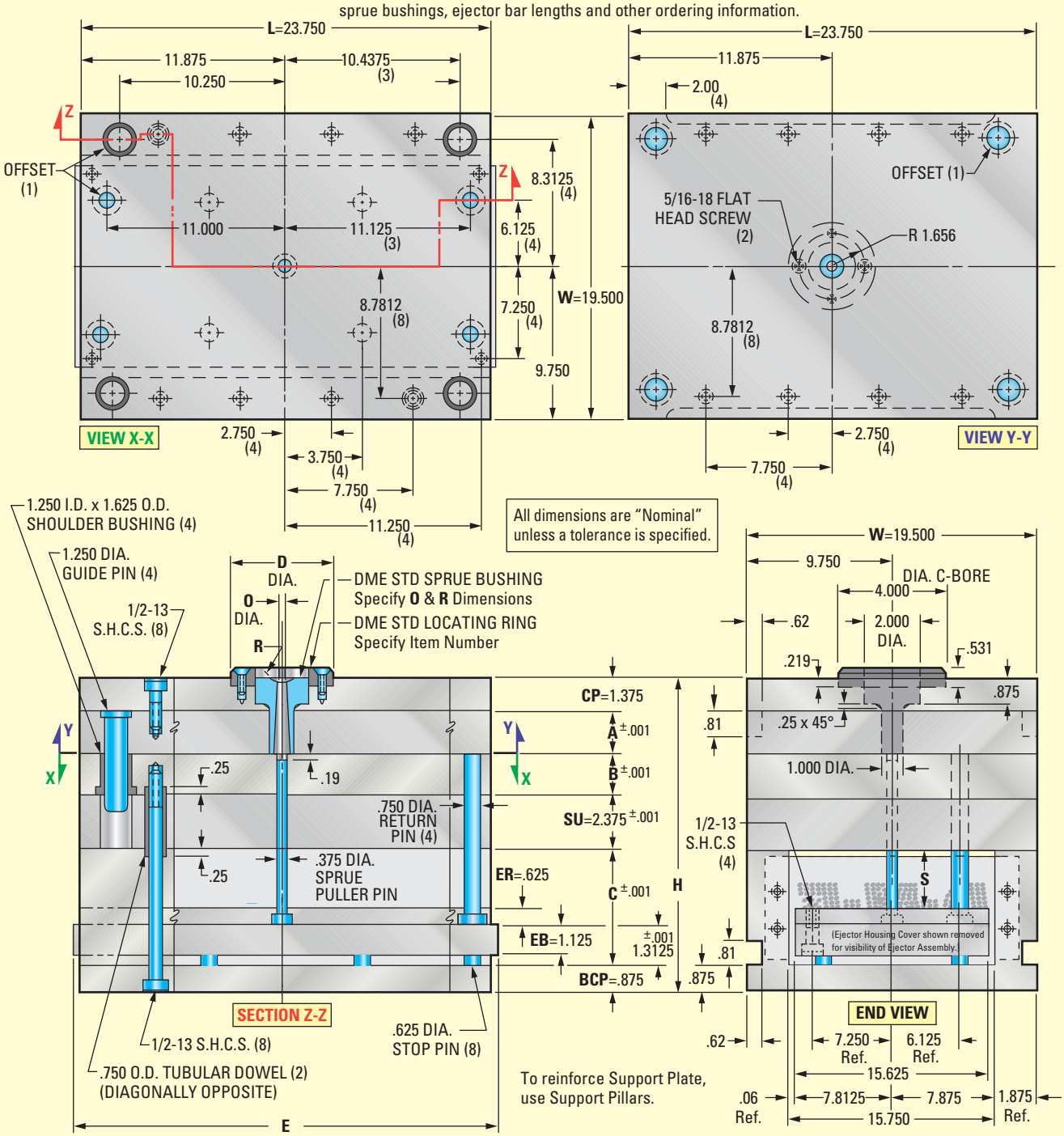

Mold Base Selections

A-Series Assembly

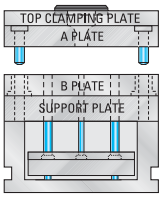

B-Series Assembly

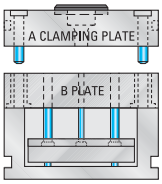

(For X-Series Stripper Plate, AX-Series and T-Series Mold Bases, see pages 173-198.)

Steel Configurations available in:

No. 1 Steel Assembly

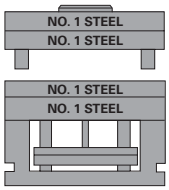

No. 2 Steel Assembly

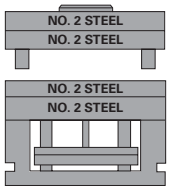

No. 3 Steel Assembly

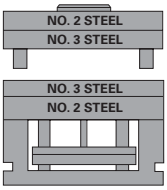

No. 7 Steel Assembly

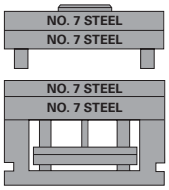

Other steel combinations also available. (Ejector Plates and Housings are No. 1 Steel, unless otherwise specified.) For additional Steel information, see page 42.

19½ x 23¾ A-Series Mold Bases

A	B	C	H	ASSEMBLY ITEM NO.	NET WT.
1.375 (1-3/8)	1.375	3.000	10.375	1924A-13-13	1221
	1.875	3.000	10.875	1924A-13-17	1287
	2.375	3.500	11.875	1924A-13-23	1365
	2.875	3.500	12.375	1924A-13-27	1430
	3.375	4.000	13.375	1924A-13-33	1509
	3.875	4.000	13.875	1924A-13-37	1574
	4.875	4.500	15.375	1924A-13-47	1718
	5.875	4.500	16.375	1924A-13-57	1849

A	B	C	H	ASSEMBLY ITEM NO.	NET WT.
2.875 (2-7/8)	1.375	3.500	12.375	1924A-27-13	1430
	1.875	3.500	12.875	1924A-27-17	1496
	2.375	3.500	13.375	1924A-27-23	1562
	2.875	4.000	14.375	1924A-27-27	1640
	3.375	4.000	14.875	1924A-27-33	1705
	3.875	4.000	15.375	1924A-27-37	1771
	4.875	4.500	16.875	1924A-27-47	1915
	5.875	4.500	17.875	1924A-27-57	2046

A	B	C	H	ASSEMBLY ITEM NO.	NET WT.
4.875 (4-7/8)	1.375	4.000	14.875	1924A-47-13	1705
	1.875	4.000	15.375	1924A-47-17	1771
	2.375	4.500	16.375	1924A-47-23	1849
	2.875	4.500	16.875	1924A-47-27	1915
	3.375	4.500	17.375	1924A-47-33	1980
	3.875	4.500	17.875	1924A-47-37	2046
	4.875	4.500	18.875	1924A-47-47	2177
	5.875	4.500	19.875	1924A-47-57	2308

A	B	C	H	ASSEMBLY ITEM NO.	NET WT.
1.875 (1-7/8)	1.375	3.000	10.875	1924A-17-13	1287
	1.875	3.000	11.375	1924A-17-17	1352
	2.375	3.500	12.375	1924A-17-23	1430
	2.875	3.500	12.875	1924A-17-27	1496
	3.375	4.000	13.875	1924A-17-33	1574
	3.875	4.000	14.375	1924A-17-37	1640
	4.875	4.500	15.875	1924A-17-47	1784
	5.875	4.500	16.875	1924A-17-57	1915

A	B	C	H	ASSEMBLY ITEM NO.	NET WT.
3.375 (3-3/8)	1.375	4.000	13.375	1924A-33-13	1509
	1.875	4.000	13.875	1924A-33-17	1574
	2.375	4.000	14.375	1924A-33-23	1640
	2.875	4.500	15.375	1924A-33-27	1718
	3.375	4.500	15.875	1924A-33-33	1784
	3.875	4.500	16.375	1924A-33-37	1849
	4.875	4.500	17.375	1924A-33-47	1980
	5.875	4.500	18.375	1924A-33-57	2112

A	B	C	H	ASSEMBLY ITEM NO.	NET WT.
5.875 (5-7/8)	1.375	4.000	15.875	1924A-57-13	1837
	1.875	4.500	16.875	1924A-57-17	1915
	2.375	4.500	17.375	1924A-57-23	1980
	2.875	4.500	17.875	1924A-57-27	2046
	3.375	4.500	18.375	1924A-57-33	2112
	3.875	4.500	18.875	1924A-57-37	2177
	4.875	4.500	19.875	1924A-57-47	2308
	5.875	4.500	20.875	1924A-57-57	2440

A	B	C	H	ASSEMBLY ITEM NO.	NET WT.
2.375 (2-3/8)	1.375	3.500	11.875	1924A-23-13	1365
	1.875	3.500	12.375	1924A-23-17	1430
	2.375	3.500	12.875	1924A-23-23	1496
	2.875	4.000	13.875	1924A-23-27	1574
	3.375	4.000	14.375	1924A-23-33	1640
	3.875	4.000	14.875	1924A-23-37	1705
	4.875	4.500	16.375	1924A-23-47	1849
	5.875	4.500	17.375	1924A-23-57	1980

A	B	C	H	ASSEMBLY ITEM NO.	NET WT.
3.875 (3-7/8)	1.375	4.000	13.875	1924A-37-13	1574
	1.875	4.000	14.375	1924A-37-17	1640
	2.375	4.500	15.375	1924A-37-23	1718
	2.875	4.500	15.875	1924A-37-27	1784
	3.375	4.500	16.375	1924A-37-33	1849
	3.875	4.500	16.875	1924A-37-37	1915
	4.875	4.500	17.875	1924A-37-47	2046
	5.875	4.500	18.875	1924A-37-57	2177

Other plate thickness, riser height and ejector bar length options available

CP TOP CLAMP PLATE THICKNESS	SU SUPPORT PLATE THICKNESS	BCP BOTTOM CLAMP PLATE THICKNESS	PLATE THICKNESS NO.
0.875	0.875	0.875	7
1.375	1.375	1.375	13
1.875	1.875	1.875	17
2.375	2.375	2.375	23
2.875	2.875	2.875	27
3.375	3.375	3.375	33
3.875	3.875	3.875	37
4.875	4.875	4.875	47
5.875	5.875	5.875	57

See Items 7 & 8 below.

C RISER		
C RISER HEIGHT	RISER HEIGHT NO.	S MAX. STROKE OF EJECTOR BAR
3.000	30	1.063
3.500	35	1.563
4.000	40	2.063
4.500	45	2.563
5.000	50	3.063
5.500	55	3.563
6.000	60	4.063

See Item 8 below.

EB EJECTOR BAR	
E LENGTH NOM.	EJECTOR BAR LENGTH NO.
23.72	24
29.47	29
35.47	35

See Item 6 below.

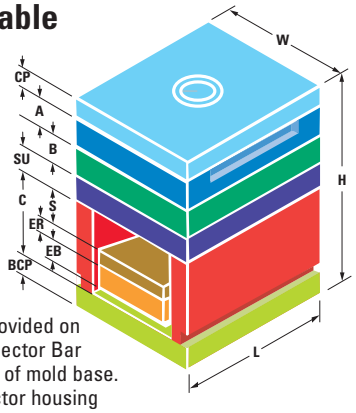

Ejector Housing Covers provided on both ends of mold when Ejector Bar Length **E** is nominal length of mold base. Customer to fabricate ejector housing covers for extended ejector bars.

WHEN ORDERING, PLEASE SPECIFY:

1. Quantity
2. Assembly Item Number (For "B" Series, replace "A" with "B")
3. Steel: #1, #2, #3 or #7 (for other steels, please specify)
4. Locating ring item number:
   Item No. 6501 (**D** = 3.990 Diameter of Locating Ring) standard
   Item No. 6504 (**D** = 3.990 Diameter of Locating Ring) clamp type
   (For other rings see DME Mold Components Catalog)
5. Type of sprue bushing, series letters: (i.e., B, etc.)
   O = Small dia. of sprue bushing orifice: .156, .218, .281 or .343
   R = Spherical radius of sprue bushing: .500 or .750
   (For sprue bushings see DME Mold Components Catalog)
6. Ejector Bar Length **E** (Ejector Bar Length at nominal length of mold base is highlighted in yellow. All other lengths provide an extended ejector bar)
7. Other **CP** Top Clamp Plate or **SU** Support Plate thicknesses as needed (Recommended thicknesses are highlighted in yellow)
8. Other **C** Riser heights as needed. Also, other **BCP** Bottom Clamp Plate thicknesses as needed. Riser height **C** and **BCP** Bottom Clamp Plate thicknesses which are highlighted in yellow are available in #1 Steel in a one-piece Welded Housing. Also, all Riser heights **C** and all **BCP** Bottom Clamp Plate thicknesses are available in #1 or #7 Steel in a Three-Piece Housing (for other steels, please specify)
9. Other features as needed (i.e. Guided Ejection, Lifting Holes, Pry Bar Slots, as well as Leader Pin, Return Pin, or Assembly Screw Relocations, etc.)
10. Method of shipment
    (For inch decimal to fractional conversion table, see page 278.)

19½ x 29½ A-Series Mold Bases

See opposite page for general dimensions, ejector stroke data, locating rings, sprue bushings, ejector bar lengths and other ordering information.

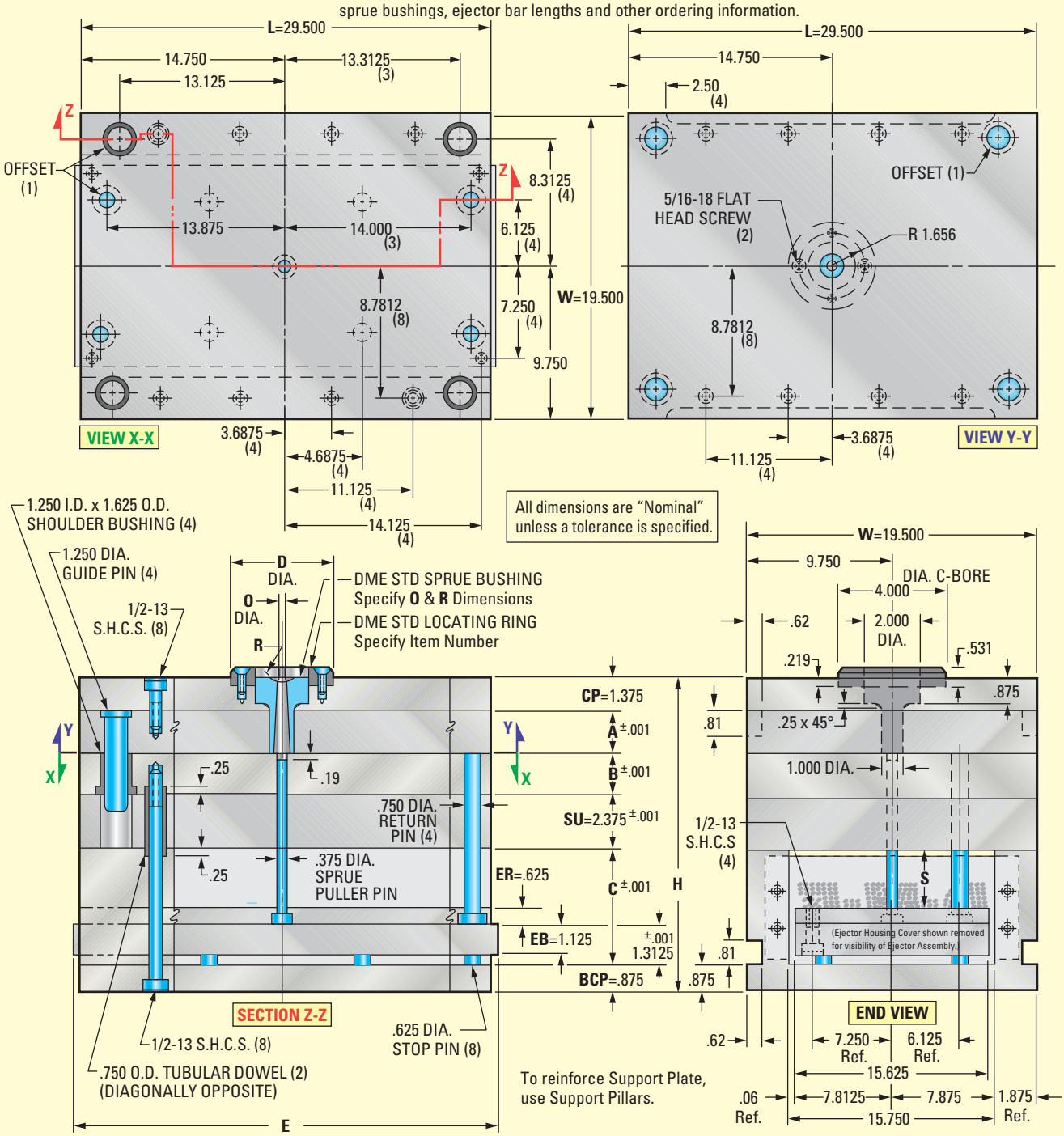

Mold Base Selections

A-Series Assembly

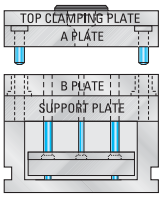

B-Series Assembly

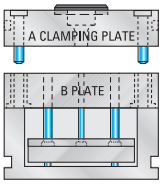

(For X-Series Stripper Plate, AX-Series and T-Series Mold Bases, see pages 173-198.)

Steel Configurations available in:

No. 1 Steel Assembly

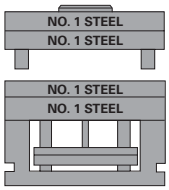

No. 2 Steel Assembly

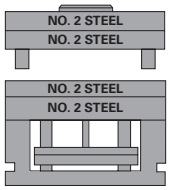

No. 3 Steel Assembly

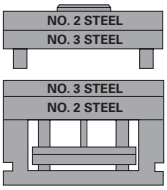

No. 7 Steel Assembly

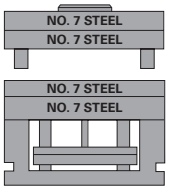

Other steel combinations also available. (Ejector Plates and Housings are No. 1 Steel, unless otherwise specified.) For additional Steel information, see page 42.

19½ x 29½ A-Series Mold Bases

A	B	C	H	ASSEMBLY ITEM NO.	NET WT.
1.375 (1-3/8)	1.375	3.000	10.375	1929A-13-13	1516
	1.875	3.000	10.875	1929A-13-17	1598
	2.375	3.500	11.875	1929A-13-23	1695
	2.875	3.500	12.375	1929A-13-27	1777
	3.375	4.000	13.375	1929A-13-33	1874
	3.875	4.000	13.875	1929A-13-37	1955
	4.875	4.500	15.375	1929A-13-47	2134
	5.875	4.500	16.375	1929A-13-57	2297

A	B	C	H	ASSEMBLY ITEM NO.	NET WT.
2.875 (2-7/8)	1.375	3.500	12.375	1929A-27-13	1777
	1.875	3.500	12.875	1929A-27-17	1858
	2.375	3.500	13.375	1929A-27-23	1849
	2.875	4.000	14.375	1929A-27-27	2037
	3.375	4.000	14.875	1929A-27-33	2118
	3.875	4.000	15.375	1929A-27-37	2200
	4.875	4.500	16.875	1929A-27-47	2378
	5.875	4.500	17.875	1929A-27-57	2541

A	B	C	H	ASSEMBLY ITEM NO.	NET WT.
4.875 (4-7/8)	1.375	4.000	14.875	1929A-47-13	2118
	1.875	4.000	15.375	1929A-47-17	2200
	2.375	4.500	16.375	1929A-47-23	2297
	2.875	4.500	16.875	1929A-47-27	2378
	3.375	4.500	17.375	1929A-47-33	2460
	3.875	4.500	17.875	1929A-47-37	2541
	4.875	4.500	18.875	1929A-47-47	2704
	5.875	4.500	19.875	1929A-47-57	2867

A	B	C	H	ASSEMBLY ITEM NO.	NET WT.
1.875 (1-7/8)	1.375	3.000	10.875	1929A-17-13	1598
	1.875	3.000	11.375	1929A-17-17	1679
	2.375	3.500	12.375	1929A-17-23	1777
	2.875	3.500	12.875	1929A-17-27	1858
	3.375	4.000	13.875	1929A-17-33	1955
	3.875	4.000	14.375	1929A-17-37	2037
	4.875	4.500	15.875	1929A-17-47	2215
	5.875	4.500	16.875	1929A-17-57	2378

A	B	C	H	ASSEMBLY ITEM NO.	NET WT.
3.375 (3-3/8)	1.375	4.000	13.375	1929A-33-13	1874
	1.875	4.000	13.875	1929A-33-17	1955
	2.375	4.000	14.375	1929A-33-23	2037
	2.875	4.500	15.375	1929A-33-27	2134
	3.375	4.500	15.875	1929A-33-33	2215
	3.875	4.500	16.375	1929A-33-37	2297
	4.875	4.500	17.375	1929A-33-47	2460
	5.875	4.500	18.375	1929A-33-57	2623

A	B	C	H	ASSEMBLY ITEM NO.	NET WT.
5.875 (5-7/8)	1.375	4.000	15.875	1929A-57-13	2281
	1.875	4.500	16.875	1929A-57-17	2378
	2.375	4.500	17.375	1929A-57-23	2460
	2.875	4.500	17.875	1929A-57-27	2541
	3.375	4.500	18.375	1929A-57-33	2623
	3.875	4.500	18.875	1929A-57-37	2704
	4.875	4.500	19.875	1929A-57-47	2867
	5.875	4.500	20.875	1929A-57-57	3030

A	B	C	H	ASSEMBLY ITEM NO.	NET WT.
2.375 (2-3/8)	1.375	3.500	11.875	1929A-23-13	1695
	1.875	3.500	12.375	1929A-23-17	1777
	2.375	3.500	12.875	1929A-23-23	1858
	2.875	4.000	13.875	1929A-23-27	1955
	3.375	4.000	14.375	1929A-23-33	2037
	3.875	4.000	14.875	1929A-23-37	2118
	4.875	4.500	16.375	1929A-23-47	2297
	5.875	4.500	17.375	1929A-23-57	2460

A	B	C	H	ASSEMBLY ITEM NO.	NET WT.
3.875 (3-7/8)	1.375	4.000	13.875	1929A-37-13	1955
	1.875	4.000	14.375	1929A-37-17	2037
	2.375	4.500	15.375	1929A-37-23	2134
	2.875	4.500	15.875	1929A-37-27	2215
	3.375	4.500	16.375	1929A-37-33	2297
	3.875	4.500	16.875	1929A-37-37	2378
	4.875	4.500	17.875	1929A-37-47	2541
	5.875	4.500	18.875	1929A-37-57	2704

Other plate thickness, riser height and ejector bar length options available

CP TOP CLAMP PLATE THICKNESS	SU SUPPORT PLATE THICKNESS	BCP BOTTOM CLAMP PLATE THICKNESS	PLATE THICKNESS NO.
0.875	0.875	0.875	7
1.375	1.375	1.375	13
1.875	1.875	1.875	17
2.375	2.375	2.375	23
2.875	2.875	2.875	27
3.375	3.375	3.375	33
3.875	3.875	3.875	37
4.875	4.875	4.875	47
5.875	5.875	5.875	57

See Items 7 & 8 below.

C RISER		
C RISER HEIGHT	RISER HEIGHT NO.	S MAX. STROKE OF EJECTOR BAR
3.000	30	1.063
3.500	35	1.563
4.000	40	2.063
4.500	45	2.563
5.000	50	3.063
5.500	55	3.563
6.000	60	4.063

See Item 8 below.

EB EJECTOR BAR	
E LENGTH NOM.	EJECTOR BAR LENGTH NO.
29.47	29
35.47	35

See Item 6 below.

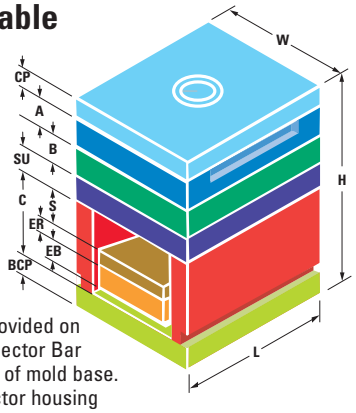

Ejector Housing Covers provided on both ends of mold when Ejector Bar Length **E** is nominal length of mold base. Customer to fabricate ejector housing covers for extended ejector bars.

WHEN ORDERING, PLEASE SPECIFY:

1. Quantity
2. Assembly Item Number (For "B" Series, replace "A" with "B")
3. Steel: #1, #2, #3 or #7 (for other steels, please specify)
4. Locating ring item number:
   Item No. 6501 (**D** = 3.990 Diameter of Locating Ring) standard
   Item No. 6504 (**D** = 3.990 Diameter of Locating Ring) clamp type
   (For other rings see DME Mold Components Catalog)
5. Type of sprue bushing, series letters: (i.e., B, etc.)
   O = Small dia. of sprue bushing orifice: .156, .218, .281 or .343
   R = Spherical radius of sprue bushing: .500 or .750
   (For sprue bushings see DME Mold Components Catalog)
6. Ejector Bar Length **E** (Ejector Bar Length at nominal length of mold base is highlighted in yellow. All other lengths provide an extended ejector bar)
7. Other **CP** Top Clamp Plate or **SU** Support Plate thicknesses as needed (Recommended thicknesses are highlighted in yellow)
8. Other **C** Riser heights as needed. Also, other **BCP** Bottom Clamp Plate thicknesses as needed. Riser height **C** and **BCP** Bottom Clamp Plate thicknesses which are highlighted in yellow are available in #1 Steel in a one-piece Welded Housing. Also, all Riser heights **C** and all **BCP** Bottom Clamp Plate thicknesses are available in #1 or #7 Steel in a Three-Piece Housing (for other steels, please specify)
9. Other features as needed (i.e. Guided Ejection, Lifting Holes, Pry Bar Slots, as well as Leader Pin, Return Pin, or Assembly Screw Relocations, etc.)
10. Method of shipment
    (For inch decimal to fractional conversion table, see page 278.)

19½ x 35½ A-Series Mold Bases

See opposite page for general dimensions, ejector stroke data, locating rings, sprue bushings, ejector bar lengths and other ordering information.

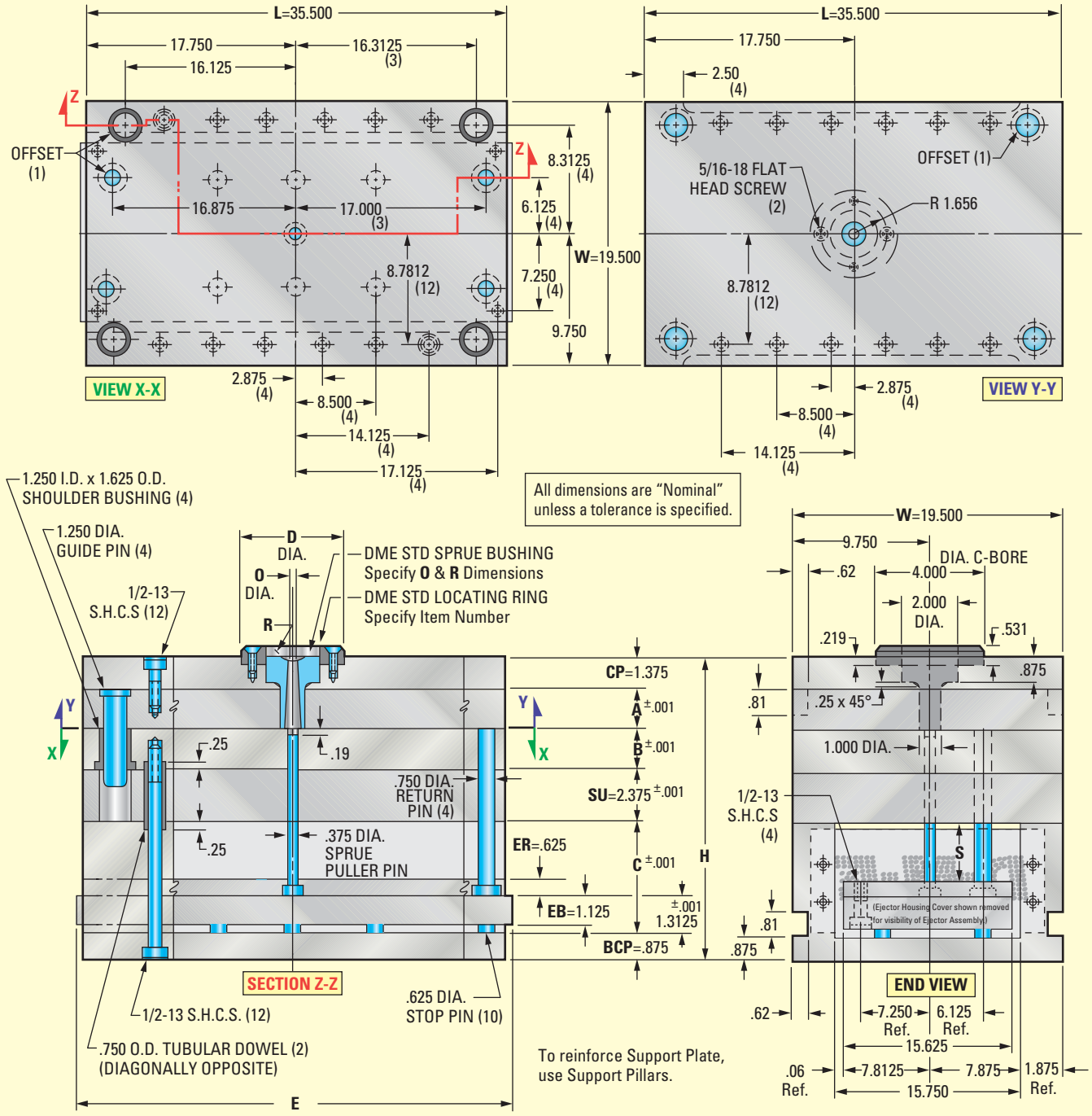

Mold Base Selections

A-Series Assembly

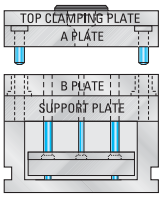

B-Series Assembly

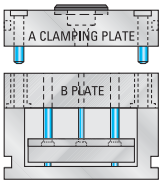

(For X-Series Stripper Plate, AX-Series and T-Series Mold Bases, see pages 173-198.)

Steel Configurations available in:

No. 1 Steel Assembly

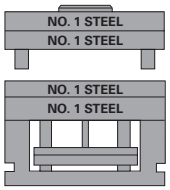

No. 2 Steel Assembly

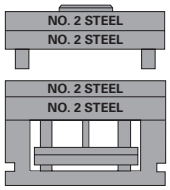

No. 3 Steel Assembly

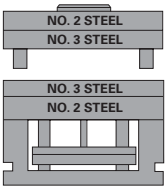

No. 7 Steel Assembly

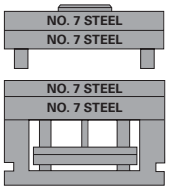

Other steel combinations also available. (Ejector Plates and Housings are No. 1 Steel, unless otherwise specified.) For additional Steel information, see page 42.

19½ x 35½ A-Series Mold Bases

A	B	C	H	ASSEMBLY ITEM NO.	NET WT.
1.375 (1-3/8)	1.375	3.000	10.375	1935A-13-13	1825
	1.875	3.000	10.875	1935A-13-17	1923
	2.375	3.500	11.875	1935A-13-23	2040
	2.875	3.500	12.375	1935A-13-27	2138
	3.375	4.000	13.375	1935A-13-33	2255
	3.875	4.000	13.875	1935A-13-37	2353
	4.875	4.500	15.375	1935A-13-47	2568
	5.875	4.500	16.375	1935A-13-57	2764

A	B	C	H	ASSEMBLY ITEM NO.	NET WT.
2.875 (2-7/8)	1.375	3.500	12.375	1935A-27-13	2138
	1.875	3.500	12.875	1935A-27-17	2236
	2.375	3.500	13.375	1935A-27-23	2334
	2.875	4.000	14.375	1935A-27-27	2451
	3.375	4.000	14.875	1935A-27-33	2549
	3.875	4.000	15.375	1935A-27-37	2647
	4.875	4.500	16.875	1935A-27-47	2862
	5.875	4.500	17.875	1935A-27-57	3058

A	B	C	H	ASSEMBLY ITEM NO.	NET WT.
4.875 (4-7/8)	1.375	4.000	14.875	1935A-47-13	2549
	1.875	4.000	15.375	1935A-47-17	2647
	2.375	4.500	16.375	1935A-47-23	2764
	2.875	4.500	16.875	1935A-47-27	2862
	3.375	4.500	17.375	1935A-47-33	2960
	3.875	4.500	17.875	1935A-47-37	3058
	4.875	4.500	18.875	1935A-47-47	3254
	5.875	4.500	19.875	1935A-47-57	3450

A	B	C	H	ASSEMBLY ITEM NO.	NET WT.
1.875 (1-7/8)	1.375	3.000	10.875	1935A-17-13	1923
	1.875	3.000	11.375	1935A-17-17	2021
	2.375	3.500	12.375	1935A-17-23	2138
	2.875	3.500	12.875	1935A-17-27	2236
	3.375	4.000	13.875	1935A-17-33	2353
	3.875	4.000	14.375	1935A-17-37	2451
	4.875	4.500	15.875	1935A-17-47	2666
	5.875	4.500	16.875	1935A-17-57	2862

A	B	C	H	ASSEMBLY ITEM NO.	NET WT.
3.375 (3-3/8)	1.375	4.000	13.375	1935A-33-13	2255
	1.875	4.000	13.875	1935A-33-17	2353
	2.375	4.000	14.375	1935A-33-23	2451
	2.875	4.500	15.375	1935A-33-27	2568
	3.375	4.500	15.875	1935A-33-33	2666
	3.875	4.500	16.375	1935A-33-37	2764
	4.875	4.500	17.375	1935A-33-47	2960
	5.875	4.500	18.375	1935A-33-57	3156

A	B	C	H	ASSEMBLY ITEM NO.	NET WT.
5.875 (5-7/8)	1.375	4.000	15.875	1935A-57-13	2745
	1.875	4.500	16.875	1935A-57-17	2862
	2.375	4.500	17.375	1935A-57-23	2960
	2.875	4.500	17.875	1935A-57-27	3058
	3.375	4.500	18.375	1935A-57-33	3156
	3.875	4.500	18.875	1935A-57-37	3254
	4.875	4.500	19.875	1935A-57-47	3450
	5.875	4.500	20.875	1935A-57-57	3646

A	B	C	H	ASSEMBLY ITEM NO.	NET WT.
2.375 (2-3/8)	1.375	3.500	11.875	1935A-23-13	2040
	1.875	3.500	12.375	1935A-23-17	2138
	2.375	3.500	12.875	1935A-23-23	2236
	2.875	4.000	13.875	1935A-23-27	2353
	3.375	4.000	14.375	1935A-23-33	2451
	3.875	4.000	14.875	1935A-23-37	2549
	4.875	4.500	16.375	1935A-23-47	2764
	5.875	4.500	17.375	1935A-23-57	2960

A	B	C	H	ASSEMBLY ITEM NO.	NET WT.
3.875 (3-7/8)	1.375	4.000	13.875	1935A-37-13	2353
	1.875	4.000	14.375	1935A-37-17	2451
	2.375	4.500	15.375	1935A-37-23	2568
	2.875	4.500	15.875	1935A-37-27	2666
	3.375	4.500	16.375	1935A-37-33	2764
	3.875	4.500	16.875	1935A-37-37	2862
	4.875	4.500	17.875	1935A-37-47	3058
	5.875	4.500	18.875	1935A-37-57	3254

Other plate thickness, riser height and ejector bar length options available

CP TOP CLAMP PLATE THICKNESS	SU SUPPORT PLATE THICKNESS	BCP BOTTOM CLAMP PLATE THICKNESS	PLATE THICKNESS NO.
0.875	0.875	0.875	7
1.375	1.375	1.375	13
1.875	1.875	1.875	17
2.375	2.375	2.375	23
2.875	2.875	2.875	27
3.375	3.375	3.375	33
3.875	3.875	3.875	37
4.875	4.875	4.875	47
5.875	5.875	5.875	57

See Items 7 & 8 below.

C RISER		
C RISER HEIGHT	RISER HEIGHT NO.	S MAX. STROKE OF EJECTOR BAR
3.000	30	1.063
3.500	35	1.563
4.000	40	2.063
4.500	45	2.563
5.000	50	3.063
5.500	55	3.563
6.000	60	4.063

See Item 8 below.

EB EJECTOR BAR	
E LENGTH NOM.	EJECTOR BAR LENGTH NO.
35.47	35

See Item 6 below.

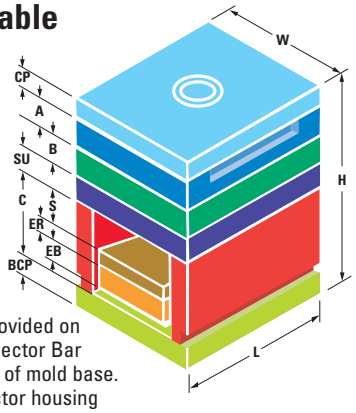

Ejector Housing Covers provided on both ends of mold when Ejector Bar Length **E** is nominal length of mold base. Customer to fabricate ejector housing covers for extended ejector bars.

WHEN ORDERING, PLEASE SPECIFY:

1. Quantity
2. Assembly Item Number (For "B" Series, replace "A" with "B")
3. Steel: #1, #2, #3 or #7 (for other steels, please specify)
4. Locating ring item number:
   Item No. 6501 (**D** = 3.990 Diameter of Locating Ring) standard
   Item No. 6504 (**D** = 3.990 Diameter of Locating Ring) clamp type
   (For other rings see DME Mold Components Catalog)
5. Type of sprue bushing, series letters: (i.e., B, etc.)
   O = Small dia. of sprue bushing orifice: .156, .218, .281 or .343
   R = Spherical radius of sprue bushing: .500 or .750
   (For sprue bushings see DME Mold Components Catalog)
6. Ejector Bar Length **E** (Ejector Bar Length at nominal length of mold base is highlighted in yellow. All other lengths provide an extended ejector bar)
7. Other **CP** Top Clamp Plate or **SU** Support Plate thicknesses as needed (Recommended thicknesses are highlighted in yellow)
8. Other **C** Riser heights as needed. Also, other **BCP** Bottom Clamp Plate thicknesses as needed. Riser height **C** and **BCP** Bottom Clamp Plate thicknesses which are highlighted in yellow are available in #1 Steel in a one-piece Welded Housing. Also, all Riser heights **C** and all **BCP** Bottom Clamp Plate thicknesses are available in #1 or #7 Steel in a Three-Piece Housing (for other steels, please specify)
9. Other features as needed (i.e. Guided Ejection, Lifting Holes, Pry Bar Slots, as well as Leader Pin, Return Pin, or Assembly Screw Relocations, etc.)
10. Method of shipment
    (For inch decimal to fractional conversion table, see page 278.)

23¾ x 23¾ A-Series Mold Bases

See opposite page for general dimensions, ejector stroke data, locating rings, sprue bushings, ejector bar lengths and other ordering information.

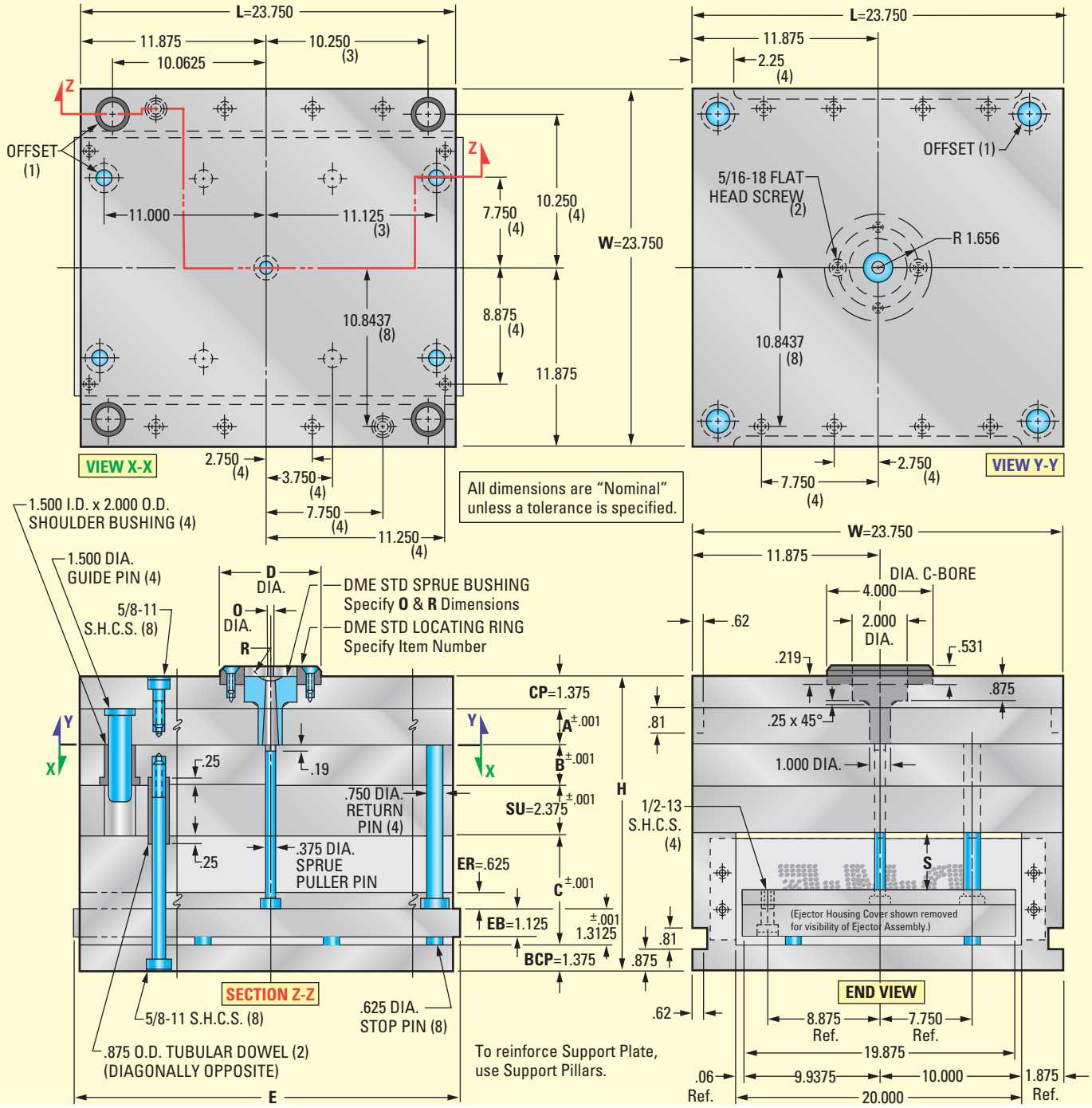

Mold Base Selections

A-Series Assembly

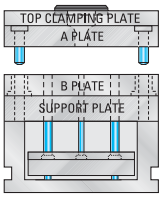

B-Series Assembly

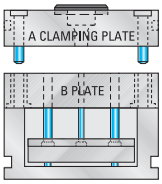

(For X-Series Stripper Plate, AX-Series and T-Series Mold Bases, see pages 173-198.)

Steel Configurations available in:

No. 1 Steel Assembly

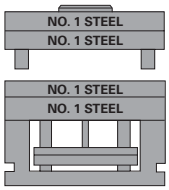

No. 2 Steel Assembly

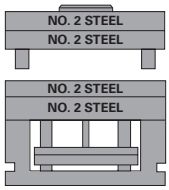

No. 3 Steel Assembly

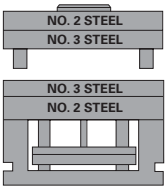

No. 7 Steel Assembly

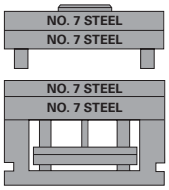

Other steel combinations also available. (Ejector Plates and Housings are No. 1 Steel, unless otherwise specified.) For additional Steel information, see page 42.

23¾ x 23¾ A-Series Mold Bases

A	B	C	H	ASSEMBLY ITEM NO.	NET WT.
1.375 (1-3/8)	1.375	3.000	10.875	2424A-13-13	1562
	1.875	3.000	11.375	2424A-13-17	1642
	2.375	3.500	12.375	2424A-13-23	1734
	2.875	3.500	12.875	2424A-13-27	1814
	3.375	4.000	13.875	2424A-13-33	1907
	3.875	4.000	14.375	2424A-13-37	1987
	4.875	4.500	15.875	2424A-13-47	2159
	5.875	4.500	16.875	2424A-13-57	2319

A	B	C	H	ASSEMBLY ITEM NO.	NET WT.
2.875 (2-7/8)	1.375	3.500	12.875	2424A-27-13	1814
	1.875	3.500	13.375	2424A-27-17	1894
	2.375	3.500	13.875	2424A-27-23	1974
	2.875	4.000	14.875	2424A-27-27	2066
	3.375	4.000	15.375	2424A-27-33	2146
	3.875	4.000	15.875	2424A-27-37	2226
	4.875	4.500	17.375	2424A-27-47	2399
	5.875	4.500	18.375	2424A-27-57	2558

A	B	C	H	ASSEMBLY ITEM NO.	NET WT.
4.875 (4-7/8)	1.375	4.000	15.375	2424A-47-13	2146
	1.875	4.000	15.875	2424A-47-17	2226
	2.375	4.500	16.875	2424A-47-23	2319
	2.875	4.500	17.375	2424A-47-27	2399
	3.375	4.500	17.875	2424A-47-33	2479
	3.875	4.500	18.375	2424A-47-37	2558
	4.875	4.500	19.375	2424A-47-47	2718
	5.875	4.500	20.375	2424A-47-57	2878

A	B	C	H	ASSEMBLY ITEM NO.	NET WT.
1.875 (1-7/8)	1.375	3.000	11.375	2424A-17-13	1642
	1.875	3.000	11.875	2424A-17-17	1722
	2.375	3.500	12.875	2424A-17-23	1814
	2.875	3.500	13.375	2424A-17-27	1894
	3.375	4.000	14.375	2424A-17-33	1987
	3.875	4.000	14.875	2424A-17-37	2066
	4.875	4.500	16.375	2424A-17-47	2239
	5.875	4.500	17.375	2424A-17-57	2399

A	B	C	H	ASSEMBLY ITEM NO.	NET WT.
3.375 (3-3/8)	1.375	4.000	13.875	2424A-33-13	1907
	1.875	4.000	14.375	2424A-33-17	1987
	2.375	4.000	14.875	2424A-33-23	2066
	2.875	4.500	15.875	2424A-33-27	2159
	3.375	4.500	16.375	2424A-33-33	2239
	3.875	4.500	16.875	2424A-33-37	2319
	4.875	4.500	17.875	2424A-33-47	2479
	5.875	4.500	18.875	2424A-33-57	2638

A	B	C	H	ASSEMBLY ITEM NO.	NET WT.
5.875 (5-7/8)	1.375	4.000	16.375	2424A-57-13	2306
	1.875	4.500	17.375	2424A-57-17	2399
	2.375	4.500	17.875	2424A-57-23	2479
	2.875	4.500	18.375	2424A-57-27	2558
	3.375	4.500	18.875	2424A-57-33	2638
	3.875	4.500	19.375	2424A-57-37	2718
	4.875	4.500	20.375	2424A-57-47	1878
	5.875	4.500	21.375	2424A-57-57	3038

A	B	C	H	ASSEMBLY ITEM NO.	NET WT.
2.375 (2-3/8)	1.375	3.500	12.375	2424A-23-13	1734
	1.875	3.500	12.875	2424A-23-17	1814
	2.375	3.500	13.375	2424A-23-23	1894
	2.875	4.000	14.375	2424A-23-27	1987
	3.375	4.000	14.875	2424A-23-33	2066
	3.875	4.000	15.375	2424A-23-37	2146
	4.875	4.500	16.875	2424A-23-47	2319
	5.875	4.500	17.875	2424A-23-57	2479

A	B	C	H	ASSEMBLY ITEM NO.	NET WT.
3.875 (3-7/8)	1.375	4.000	14.375	2424A-37-13	1987
	1.875	4.000	14.875	2424A-37-17	2066
	2.375	4.500	15.875	2424A-37-23	2159
	2.875	4.500	16.375	2424A-37-27	2239
	3.375	4.500	16.875	2424A-37-33	2319
	3.875	4.500	17.375	2424A-37-37	2399
	4.875	4.500	18.375	2424A-37-47	2558
	5.875	4.500	19.375	2424A-37-57	2718

Other plate thickness, riser height and ejector bar length options available

CP TOP CLAMP PLATE THICKNESS	SU SUPPORT PLATE THICKNESS	BCP BOTTOM CLAMP PLATE THICKNESS	PLATE THICKNESS NO.
0.875	0.875	0.875	7
1.375	1.375	1.375	13
1.875	1.875	1.875	17
2.375	2.375	2.375	23
2.875	2.875	2.875	27
3.375	3.375	3.375	33
3.875	3.875	3.875	37
4.875	4.875	4.875	47
5.875	5.875	5.875	57

See Items 7 & 8 below.

C RISER		
C RISER HEIGHT	RISER HEIGHT NO.	S MAX. STROKE OF EJECTOR BAR
3.000	30	1.063
3.500	35	1.563
4.000	40	2.063
4.500	45	2.563
5.000	50	3.063
5.500	55	3.563
6.000	60	4.063

See Item 8 below.

EB EJECTOR BAR	
E LENGTH NOM.	EJECTOR BAR LENGTH NO.
23.72	24
29.47	29
35.47	35

See Item 6 below.

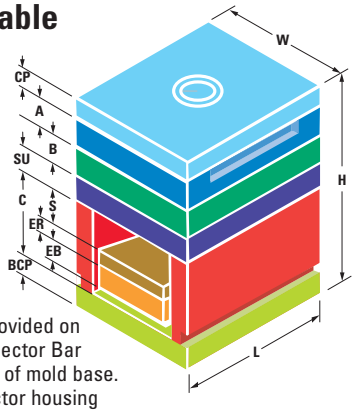

Ejector Housing Covers provided on both ends of mold when Ejector Bar Length **E** is nominal length of mold base. Customer to fabricate ejector housing covers for extended ejector bars.

WHEN ORDERING, PLEASE SPECIFY:

1. Quantity
2. Assembly Item Number (For "B" Series, replace "A" with "B")
3. Steel: #1, #2, #3 or #7 (for other steels, please specify)
4. Locating ring item number:
   Item No. 6501 (**D** = 3.990 Diameter of Locating Ring) standard
   Item No. 6504 (**D** = 3.990 Diameter of Locating Ring) clamp type
   (For other rings see DME Mold Components Catalog)
5. Type of sprue bushing, series letters: (i.e., B, etc.)
   O = Small dia. of sprue bushing orifice: .156, .218, .281 or .343
   R = Spherical radius of sprue bushing: .500 or .750
   (For sprue bushings see DME Mold Components Catalog)
6. Ejector Bar Length **E** (Ejector Bar Length at nominal length of mold base is highlighted in yellow. All other lengths provide an extended ejector bar)
7. Other **CP** Top Clamp Plate or **SU** Support Plate thicknesses as needed (Recommended thicknesses are highlighted in yellow)
8. Other **C** Riser heights as needed. Also, other **BCP** Bottom Clamp Plate thicknesses as needed. Riser height **C** and **BCP** Bottom Clamp Plate thicknesses which are highlighted in yellow are available in #1 Steel in a one-piece Welded Housing. Also, all Riser heights **C** and all **BCP** Bottom Clamp Plate thicknesses are available in #1 or #7 Steel in a Three-Piece Housing (for other steels, please specify)
9. Other features as needed (i.e. Guided Ejection, Lifting Holes, Pry Bar Slots, as well as Leader Pin, Return Pin, or Assembly Screw Relocations, etc.)
10. Method of shipment
    (For inch decimal to fractional conversion table, see page 278.)

23¾ x 29½ A-Series Mold Bases

See opposite page for general dimensions, ejector stroke data, locating rings, sprue bushings, ejector bar lengths and other ordering information.

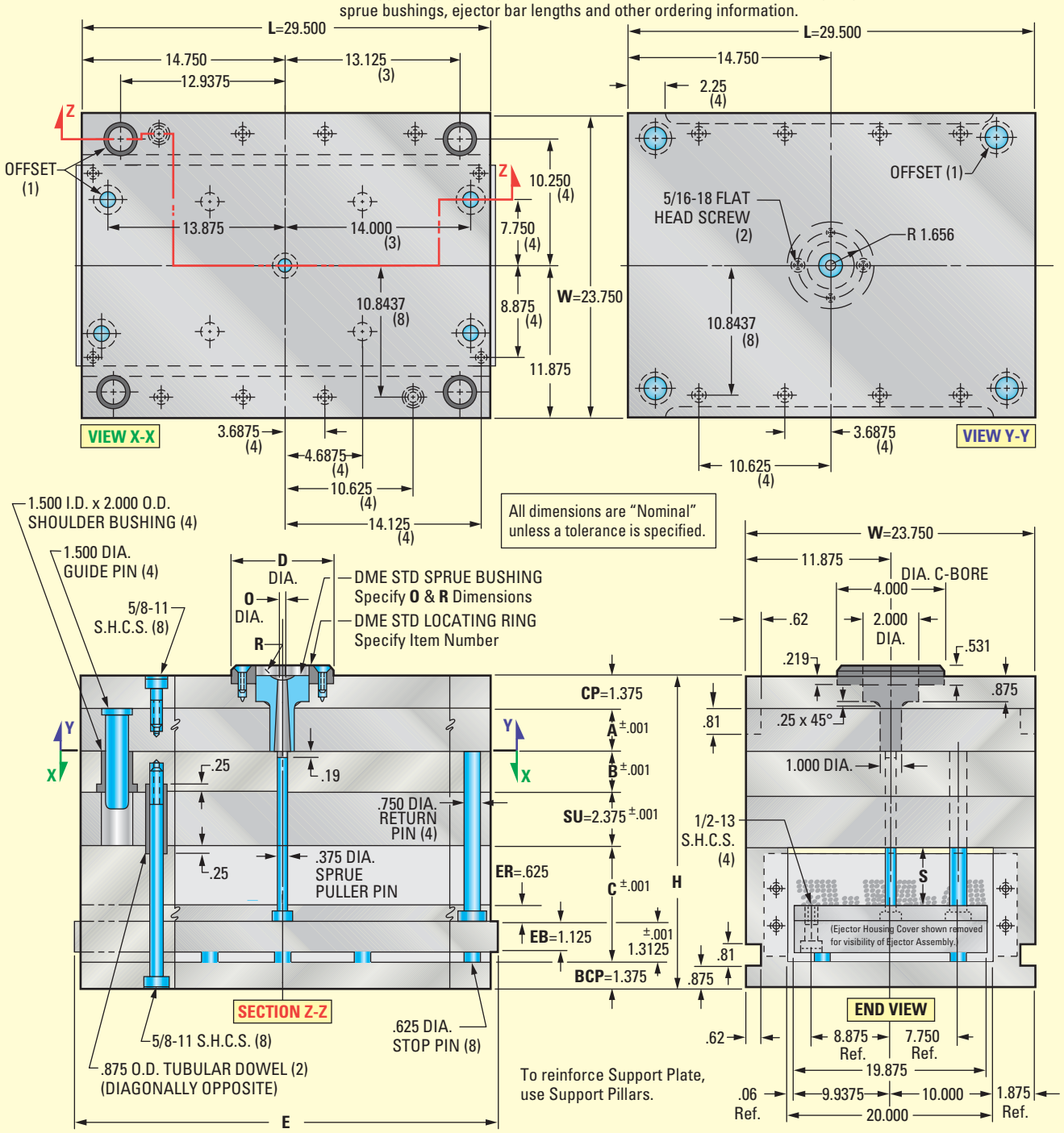

Mold Base Selections

A-Series Assembly

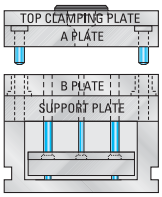

B-Series Assembly

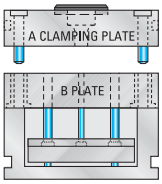

(For X-Series Stripper Plate, AX-Series and T-Series Mold Bases, see pages 173-198.)

Steel Configurations available in:

No. 1 Steel Assembly

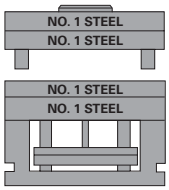

No. 2 Steel Assembly

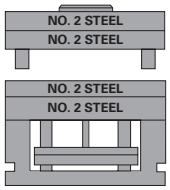

No. 3 Steel Assembly

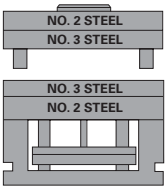

No. 7 Steel Assembly

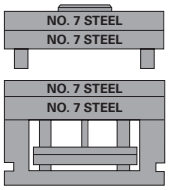

Other steel combinations also available. (Ejector Plates and Housings are No. 1 Steel, unless otherwise specified.) For additional Steel information, see page 42.

23¾ x 29½ A-Series Mold Bases

A	B	C	H	ASSEMBLY ITEM NO.	NET WT.
1.375 (1-3/8)	1.375	3.000	10.875	2429A-13-13	1940
	1.875	3.000	11.375	2429A-13-17	2039
	2.375	3.500	12.375	2429A-13-23	2154
	2.875	3.500	12.875	2429A-13-27	2253
	3.375	4.000	13.875	2429A-13-33	2368
	3.875	4.000	14.375	2429A-13-37	2467
	4.875	4.500	15.875	2429A-13-47	2681
	5.875	4.500	16.875	2429A-13-57	2880

A	B	C	H	ASSEMBLY ITEM NO.	NET WT.
2.875 (2-7/8)	1.375	3.500	12.875	2429A-27-13	2253
	1.875	3.500	13.375	2429A-27-17	2352
	2.375	3.500	13.875	2429A-27-23	2452
	2.875	4.000	14.875	2429A-27-27	2567
	3.375	4.000	15.375	2429A-27-33	2666
	3.875	4.000	15.875	2429A-27-37	2765
	4.875	4.500	17.375	2429A-27-47	2979
	5.875	4.500	18.375	2429A-27-57	3178

A	B	C	H	ASSEMBLY ITEM NO.	NET WT.
4.875 (4-7/8)	1.375	4.000	15.375	2429A-47-13	2666
	1.875	4.000	15.875	2429A-47-17	2765
	2.375	4.500	16.875	2429A-47-23	2880
	2.875	4.500	17.375	2429A-47-27	2979
	3.375	4.500	17.875	2429A-47-33	3078
	3.875	4.500	18.375	2429A-47-37	3178
	4.875	4.500	19.375	2429A-47-47	3376
	5.875	4.500	20.375	2429A-47-57	3575

A	B	C	H	ASSEMBLY ITEM NO.	NET WT.
1.875 (1-7/8)	1.375	3.000	11.375	2429A-17-13	2039
	1.875	3.000	11.875	2429A-17-17	2138
	2.375	3.500	12.875	2429A-17-23	2253
	2.875	3.500	13.375	2429A-17-27	2352
	3.375	4.000	14.375	2429A-17-33	2467
	3.875	4.000	14.875	2429A-17-37	2567
	4.875	4.500	16.375	2429A-17-47	2781
	5.875	4.500	17.375	2429A-17-57	2979

A	B	C	H	ASSEMBLY ITEM NO.	NET WT.
3.375 (3-3/8)	1.375	4.000	13.875	2429A-33-13	2368
	1.875	4.000	14.375	2429A-33-17	2467
	2.375	4.000	14.875	2429A-33-23	2567
	2.875	4.500	15.875	2429A-33-27	2681
	3.375	4.500	16.375	2429A-33-33	2781
	3.875	4.500	16.875	2429A-33-37	2880
	4.875	4.500	17.875	2429A-33-47	3078
	5.875	4.500	18.875	2429A-33-57	3277

A	B	C	H	ASSEMBLY ITEM NO.	NET WT.
5.875 (5-7/8)	1.375	4.000	16.375	2429A-57-13	2864
	1.875	4.500	17.375	2429A-57-17	2979
	2.375	4.500	17.875	2429A-57-23	3078
	2.875	4.500	18.375	2429A-57-27	3178
	3.375	4.500	18.875	2429A-57-33	3277
	3.875	4.500	19.375	2429A-57-37	3376
	4.875	4.500	20.375	2429A-57-47	3575
	5.875	4.500	21.375	2429A-57-57	3773

A	B	C	H	ASSEMBLY ITEM NO.	NET WT.
2.375 (2-3/8)	1.375	3.500	12.375	2429A-23-13	2154
	1.875	3.500	12.875	2429A-23-17	2253
	2.375	3.500	13.375	2429A-23-23	2352
	2.875	4.000	14.375	2429A-23-27	2467
	3.375	4.000	14.875	2429A-23-33	2567
	3.875	4.000	15.375	2429A-23-37	2666
	4.875	4.500	16.875	2429A-23-47	2880
	5.875	4.500	17.875	2429A-23-57	3078

A	B	C	H	ASSEMBLY ITEM NO.	NET WT.
3.875 (3-7/8)	1.375	4.000	14.375	2429A-37-13	2467
	1.875	4.000	14.875	2429A-37-17	2567
	2.375	4.500	15.875	2429A-37-23	2681
	2.875	4.500	16.375	2429A-37-27	2781
	3.375	4.500	16.875	2429A-37-33	2880
	3.875	4.500	17.375	2429A-37-37	2979
	4.875	4.500	18.375	2429A-37-47	3178
	5.875	4.500	19.375	2429A-37-57	3376

Other plate thickness, riser height and ejector bar length options available

CP TOP CLAMP PLATE THICKNESS	SU SUPPORT PLATE THICKNESS	BCP BOTTOM CLAMP PLATE THICKNESS	PLATE THICKNESS NO.
0.875	0.875	0.875	7
1.375	1.375	1.375	13
1.875	1.875	1.875	17
2.375	2.375	2.375	23
2.875	2.875	2.875	27
3.375	3.375	3.375	33
3.875	3.875	3.875	37
4.875	4.875	4.875	47
5.875	5.875	5.875	57

See Items 7 & 8 below.

C RISER		
C RISER HEIGHT	RISER HEIGHT NO.	S MAX. STROKE OF EJECTOR BAR
3.000	30	1.063
3.500	35	1.563
4.000	40	2.063
4.500	45	2.563
5.000	50	3.063
5.500	55	3.563
6.000	60	4.063

See Item 8 below.

EB EJECTOR BAR	
E LENGTH NOM.	EJECTOR BAR LENGTH NO.
29.47	29
35.47	35

See Item 6 below.

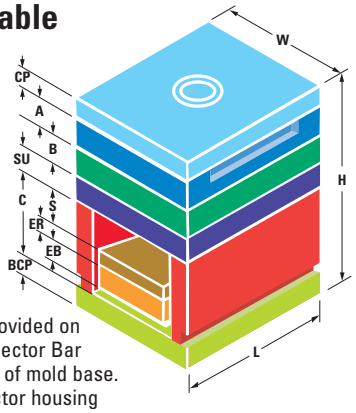

Ejector Housing Covers provided on both ends of mold when Ejector Bar Length **E** is nominal length of mold base. Customer to fabricate ejector housing covers for extended ejector bars.

WHEN ORDERING, PLEASE SPECIFY:

1. Quantity
2. Assembly Item Number (For "B" Series, replace "A" with "B")
3. Steel: #1, #2, #3 or #7 (for other steels, please specify)
4. Locating ring item number:
   Item No. 6501 (**D** = 3.990 Diameter of Locating Ring) standard
   Item No. 6504 (**D** = 3.990 Diameter of Locating Ring) clamp type
   (For other rings see DME Mold Components Catalog)
5. Type of sprue bushing, series letters: (i.e., B, etc.)
   O = Small dia. of sprue bushing orifice: .156, .218, .281 or .343
   R = Spherical radius of sprue bushing: .500 or .750
   (For sprue bushings see DME Mold Components Catalog)
6. Ejector Bar Length **E** (Ejector Bar Length at nominal length of mold base is highlighted in yellow. All other lengths provide an extended ejector bar)
7. Other **CP** Top Clamp Plate or **SU** Support Plate thicknesses as needed (Recommended thicknesses are highlighted in yellow)
8. Other **C** Riser heights as needed. Also, other **BCP** Bottom Clamp Plate thicknesses as needed. Riser height **C** and **BCP** Bottom Clamp Plate thicknesses which are highlighted in yellow are available in #1 Steel in a one-piece Welded Housing. Also, all Riser heights **C** and all **BCP** Bottom Clamp Plate thicknesses are available in #1 or #7 Steel in a Three-Piece Housing (for other steels, please specify)
9. Other features as needed (i.e. Guided Ejection, Lifting Holes, Pry Bar Slots, as well as Leader Pin, Return Pin, or Assembly Screw Relocations, etc.)
10. Method of shipment
    (For inch decimal to fractional conversion table, see page 278.)

23¾ x 35½ A-Series Mold Bases

See opposite page for general dimensions, ejector stroke data, locating rings, sprue bushings, ejector bar lengths and other ordering information.

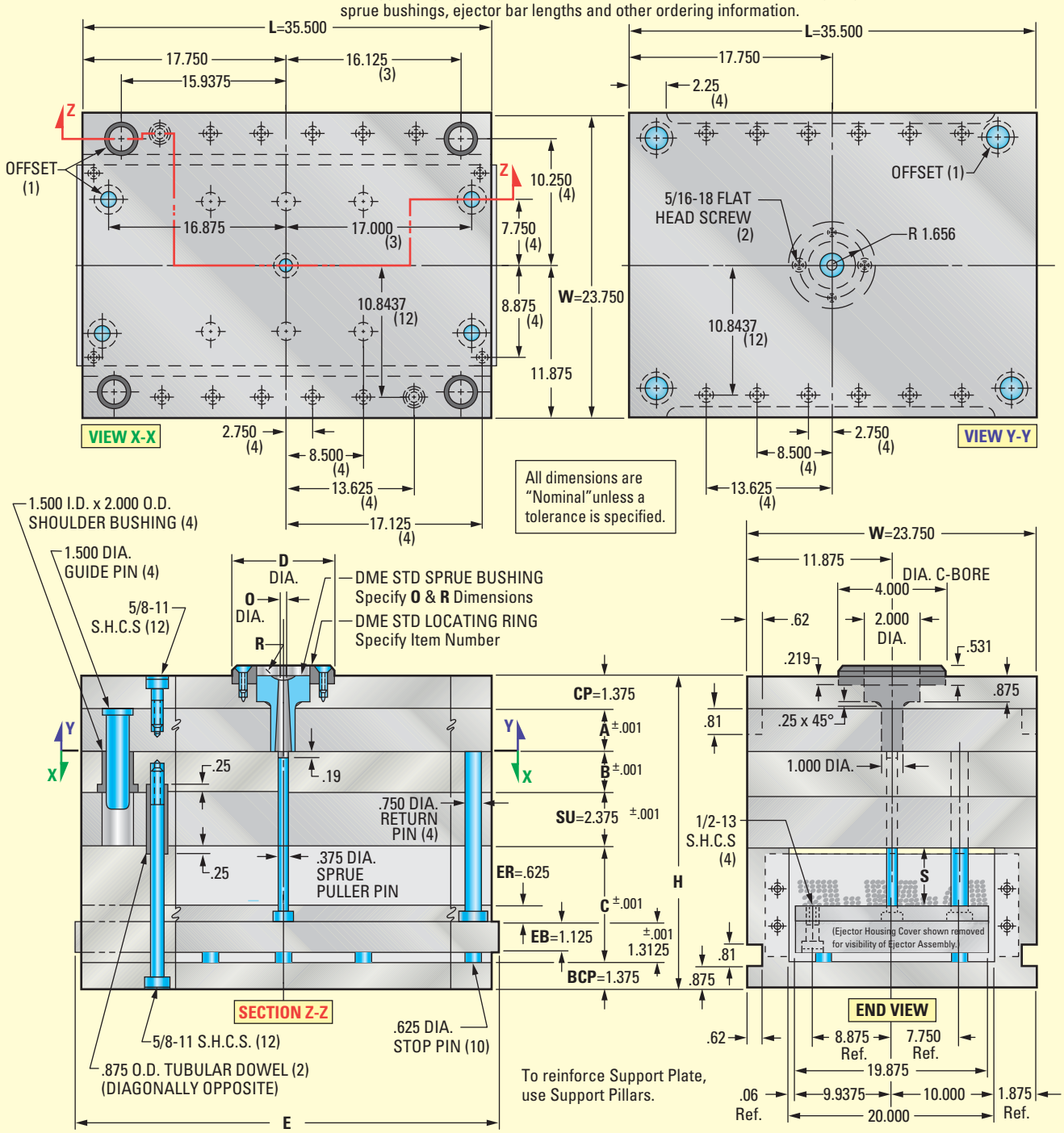

Mold Base Selections

A-Series Assembly

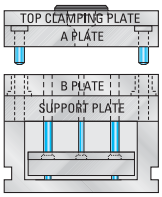

B-Series Assembly

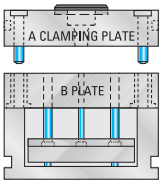

(For X-Series Stripper Plate, AX-Series and T-Series Mold Bases, see pages 173-198.)

Steel Configurations available in:

No. 1 Steel Assembly

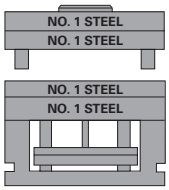

No. 2 Steel Assembly

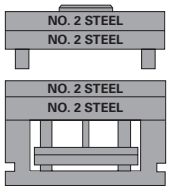

No. 3 Steel Assembly

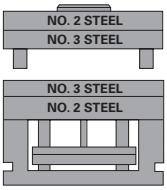

No. 7 Steel Assembly

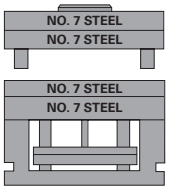

Other steel combinations also available. (Ejector Plates and Housings are No. 1 Steel, unless otherwise specified.) For additional Steel information, see page 42.

23¾ x 35½ A-Series Mold Bases

A	B	C	H	ASSEMBLY ITEM NO.	NET WT.
1.375 (1-3/8)	1.375	3.000	10.875	2435A-13-13	2334
	1.875	3.000	11.375	2435A-13-17	2454
	2.375	3.500	12.375	2435A-13-23	2592
	2.875	3.500	12.875	2435A-13-27	2711
	3.375	4.000	13.875	2435A-13-33	2850
	3.875	4.000	14.375	2435A-13-37	2969
	4.875	4.500	15.875	2435A-13-47	3227
	5.875	4.500	16.875	2435A-13-57	3466

A	B	C	H	ASSEMBLY ITEM NO.	NET WT.
2.875 (2-7/8)	1.375	3.500	12.875	2435A-27-13	2711
	1.875	3.500	13.375	2435A-27-17	2831
	2.375	3.500	13.875	2435A-27-23	2950
	2.875	4.000	14.875	2435A-27-27	3089
	3.375	4.000	15.375	2435A-27-33	3208
	3.875	4.000	15.875	2435A-27-37	3327
	4.875	4.500	17.375	2435A-27-47	3585
	5.875	4.500	18.375	2435A-27-57	3824

A	B	C	H	ASSEMBLY ITEM NO.	NET WT.
4.875 (4-7/8)	1.375	4.000	15.375	2435A-47-13	3208
	1.875	4.000	15.875	2435A-47-17	3327
	2.375	4.500	16.875	2435A-47-23	3466
	2.875	4.500	17.375	2435A-47-27	3585
	3.375	4.500	17.875	2435A-47-33	3705
	3.875	4.500	18.375	2435A-47-37	3824
	4.875	4.500	19.375	2435A-47-47	4063
	5.875	4.500	20.375	2435A-47-57	4302

A	B	C	H	ASSEMBLY ITEM NO.	NET WT.
1.875 (1-7/8)	1.375	3.000	11.375	2435A-17-13	2454
	1.875	3.000	11.875	2435A-17-17	2573
	2.375	3.500	12.875	2435A-17-23	2711
	2.875	3.500	13.375	2435A-17-27	2831
	3.375	4.000	14.375	2435A-17-33	2969
	3.875	4.000	14.875	2435A-17-37	3089
	4.875	4.500	16.375	2435A-17-47	3346
	5.875	4.500	17.375	2435A-17-57	3585

A	B	C	H	ASSEMBLY ITEM NO.	NET WT.
3.375 (3-3/8)	1.375	4.000	13.875	2435A-33-13	2850
	1.875	4.000	14.375	2435A-33-17	2969
	2.375	4.000	14.875	2435A-33-23	3089
	2.875	4.500	15.875	2435A-33-27	3227
	3.375	4.500	16.375	2435A-33-33	3346
	3.875	4.500	16.875	2435A-33-37	3466
	4.875	4.500	17.875	2435A-33-47	3705
	5.875	4.500	18.875	2435A-33-57	3943

A	B	C	H	ASSEMBLY ITEM NO.	NET WT.
5.875 (5-7/8)	1.375	4.000	16.375	2435A-57-13	3447
	1.875	4.500	17.375	2435A-57-17	3585
	2.375	4.500	17.875	2435A-57-23	3705
	2.875	4.500	18.375	2435A-57-27	3824
	3.375	4.500	18.875	2435A-57-33	3943
	3.875	4.500	19.375	2435A-57-37	4063
	4.875	4.500	20.375	2435A-57-47	4302
	5.875	4.500	21.375	2435A-57-57	4541

A	B	C	H	ASSEMBLY ITEM NO.	NET WT.
2.375 (2-3/8)	1.375	3.500	12.375	2435A-23-13	2592
	1.875	3.500	12.875	2435A-23-17	2711
	2.375	3.500	13.375	2435A-23-23	2831
	2.875	4.000	14.375	2435A-23-27	2969
	3.375	4.000	14.875	2435A-23-33	3089
	3.875	4.000	15.375	2435A-23-37	3208
	4.875	4.500	16.875	2435A-23-47	3466
	5.875	4.500	17.875	2435A-23-57	3705

A	B	C	H	ASSEMBLY ITEM NO.	NET WT.
3.875 (3-7/8)	1.375	4.000	14.375	2435A-37-13	2969
	1.875	4.000	14.875	2435A-37-17	3089
	2.375	4.500	15.875	2435A-37-23	3227
	2.875	4.500	16.375	2435A-37-27	3346
	3.375	4.500	16.875	2435A-37-33	3466
	3.875	4.500	17.375	2435A-37-37	3585
	4.875	4.500	18.375	2435A-37-47	3824
	5.875	4.500	19.375	2435A-37-57	4063

Other plate thickness, riser height and ejector bar length options available

CP TOP CLAMP PLATE THICKNESS	SU SUPPORT PLATE THICKNESS	BCP BOTTOM CLAMP PLATE THICKNESS	PLATE THICKNESS NO.
0.875	0.875	0.875	7
1.375	1.375	1.375	13
1.875	1.875	1.875	17
2.375	2.375	2.375	23
2.875	2.875	2.875	27
3.375	3.375	3.375	33
3.875	3.875	3.875	37
4.875	4.875	4.875	47
5.875	5.875	5.875	57

See Items 7 & 8 below.

C RISER		
C RISER HEIGHT	RISER HEIGHT NO.	S MAX. STROKE OF EJECTOR BAR
3.000	30	1.063
3.500	35	1.563
4.000	40	2.063
4.500	45	2.563
5.000	50	3.063
5.500	55	3.563
6.000	60	4.063

See Item 8 below.

EB EJECTOR BAR	
E LENGTH NOM.	EJECTOR BAR LENGTH NO.
35.47	35

See Item 6 below.

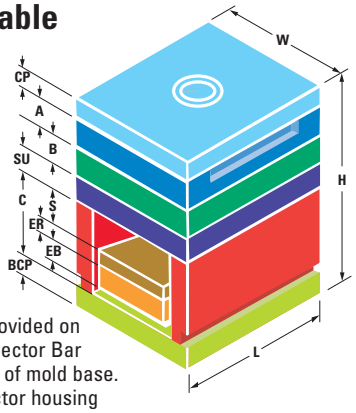

Ejector Housing Covers provided on both ends of mold when Ejector Bar Length **E** is nominal length of mold base. Customer to fabricate ejector housing covers for extended ejector bars.

WHEN ORDERING, PLEASE SPECIFY:

1. Quantity
2. Assembly Item Number (For "B" Series, replace "A" with "B")
3. Steel: #1, #2, #3 or #7 (for other steels, please specify)
4. Locating ring item number:
   Item No. 6501 (**D** = 3.990 Diameter of Locating Ring) standard
   Item No. 6504 (**D** = 3.990 Diameter of Locating Ring) clamp type
   (For other rings see DME Mold Components Catalog)
5. Type of sprue bushing, series letters: (i.e., B, etc.)
   O = Small dia. of sprue bushing orifice: .156, .218, .281 or .343
   R = Spherical radius of sprue bushing: .500 or .750
   (For sprue bushings see DME Mold Components Catalog)
6. Ejector Bar Length **E** (Ejector Bar Length at nominal length of mold base is highlighted in yellow. All other lengths provide an extended ejector bar)
7. Other **CP** Top Clamp Plate or **SU** Support Plate thicknesses as needed (Recommended thicknesses are highlighted in yellow)
8. Other **C** Riser heights as needed. Also, other **BCP** Bottom Clamp Plate thicknesses as needed. Riser height **C** and **BCP** Bottom Clamp Plate thicknesses which are highlighted in yellow are available in #1 Steel in a one-piece Welded Housing. Also, all Riser heights **C** and all **BCP** Bottom Clamp Plate thicknesses are available in #1 or #7 Steel in a Three-Piece Housing (for other steels, please specify)
9. Other features as needed (i.e. Guided Ejection, Lifting Holes, Pry Bar Slots, as well as Leader Pin, Return Pin, or Assembly Screw Relocations, etc.)
10. Method of shipment
    (For inch decimal to fractional conversion table, see page 278.)

Available in 43 Nominal Sizes

The DME "B" Series Mold Base offers economy of design without sacrificing the high-quality steel and workmanship of the "A" Series. The two mold bases are identical except for the "B" Series "two-plate" design. A thicker "A" plate acts as both Top Clamping Plate and upper Cavity Plate. Similarly, a thicker "B" plate eliminates the need for a Support Plate on the "B" side of the mold. The "B" Series is sometimes specified for single-cavity plastics molds or die-cast dies where the cavity and core are machined directly into the Cavity Plates; or where overall mold height is critical. As a two-plate design, cavity inserts have to be installed into "blind" pockets.

Instructions for ordering:

"B" Series Mold Bases are available in the same variety of steels, sizes and plate combinations as the "A" Series. Since the clamp slots are located in the "A" plate, the recommended minimum "A" plate thickness for a "B" Series Mold Base is 1.875. If an "A" plate less than 1.875 is desired, exact clamp slot and center hold specifications must be provided.

Unless otherwise specified, the size and location of return pins and screws will be identical to those of the corresponding size "A" Series Mold Base. In addition, unless otherwise specified, the riser height will be supplied to conform with the standard "C" dimension listed for the corresponding size "A" Series Mold Base.

To create assembly item number:

Use item number prefix shown in chart at right, followed by A and B plate thickness codes.

Example: 10.875 x 14 B-Series with 2.375 A-Plate and 2.875 B-Plate = 1114B-23-27

PLATE THICKNESS CODES	
THICKNESS	CODE
.875*	7
1.375*	13
1.875	17
2.375	23
2.875	27
3.375	33
3.875	37
4.875	47
5.875	57

*Not recommended for "A" Plate. See instructions for ordering on this page.

STANDARD SIZE		ITEM NO. PREFIX
W	L	
7.875	7.875	88B
	11.875	812B
9.875	8.000	108B
	11.875	1012B
	16.000	1016B
	20.000	1020B
10.875	12.000	1112B
	14.000	1114B
	18.000	1118B
	23.500	1123B
11.875	12.000	1212B
	15.000	1215B
	20.000	1220B
	23.500	1223B
13.375	15.000	1315B
	18.000	1318B
	20.750	1321B
	23.500	1323B
	26.000	1326B
	29.500	1329B
14.875	17.875	1518B
	23.750	1524B
	29.500	1529B

STANDARD SIZE		ITEM NO. PREFIX
W	L	
15.875	16.000	1616B
	20.000	1620B
	23.500	1623B
	26.000	1626B
	29.500	1629B
	35.500	1635B
16.500	23.750	1724B
	29.500	1729B
17.875	18.000	1818B
	20.000	1820B
	23.500	1823B
	26.000	1826B
	29.500	1829B
	35.500	1835B
19.500	23.750	1924B
	29.500	1929B
	35.500	1935B
23.750	23.750	2424B
	29.500	2429B
	35.500	2435B

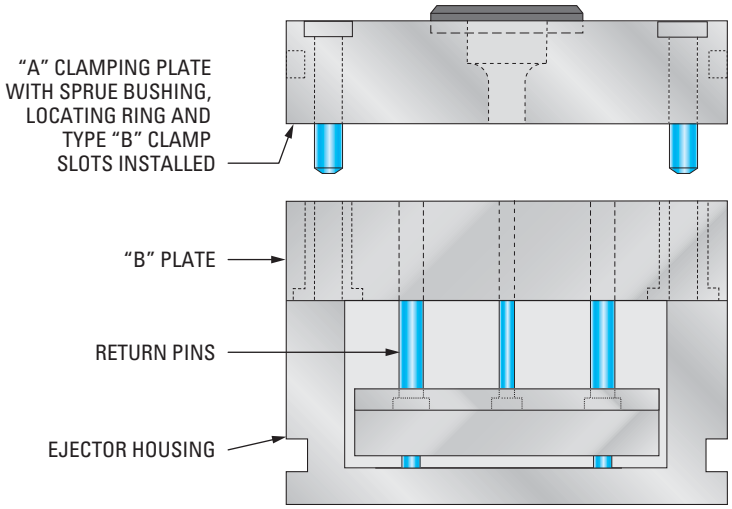

WHEN ORDERING, PLEASE SPECIFY:

1. Quantity
2. Assembly Item Number (as created above)
3. Steel: #1, #2, #3 or #7 (for other steels, please specify)
4. Locating ring item number:
   Item No. 6501 (**D** = 3.990 Diameter of Locating Ring) standard
   Item No. 6504 (**D** = 3.990 Diameter of Locating Ring) clamp type
   (For other rings see DME Mold Components Catalog)
5. Type of sprue bushing, series letters: (i.e., B, etc.)
   O = Small dia. of sprue bushing orifice: .156, .218, .281 or .343
   R = Spherical radius of sprue bushing: .500 or .750
   (For sprue bushings see DME Mold Components Catalog)
6. Ejector Bar Length **E** (Ejector Bar Length at nominal length of mold base is highlighted in yellow. All other lengths provide an extended ejector bar)
7. Other **C** Riser heights as needed. Also, other **BCP** Bottom Clamp Plate thicknesses as needed. Riser height **C** and **BCP** Bottom Clamp Plate thicknesses which are highlighted in yellow are available in #1 Steel in a one-piece Welded Housing. Also, all Riser heights **C** and all **BCP** Bottom Clamp Plate thicknesses are available in #1 or #7 Steel in a three-piece Housing (for other steels, please specify)
8. Other features as needed (i.e. Guided Ejection, Lifting Holes, Pry Bar Slots, as well as Leader Pin, Return Pin, or Assembly Screw Relocations, etc.)
9. Method of shipment
   (For inch decimal to fractional conversion table, see page 278.)

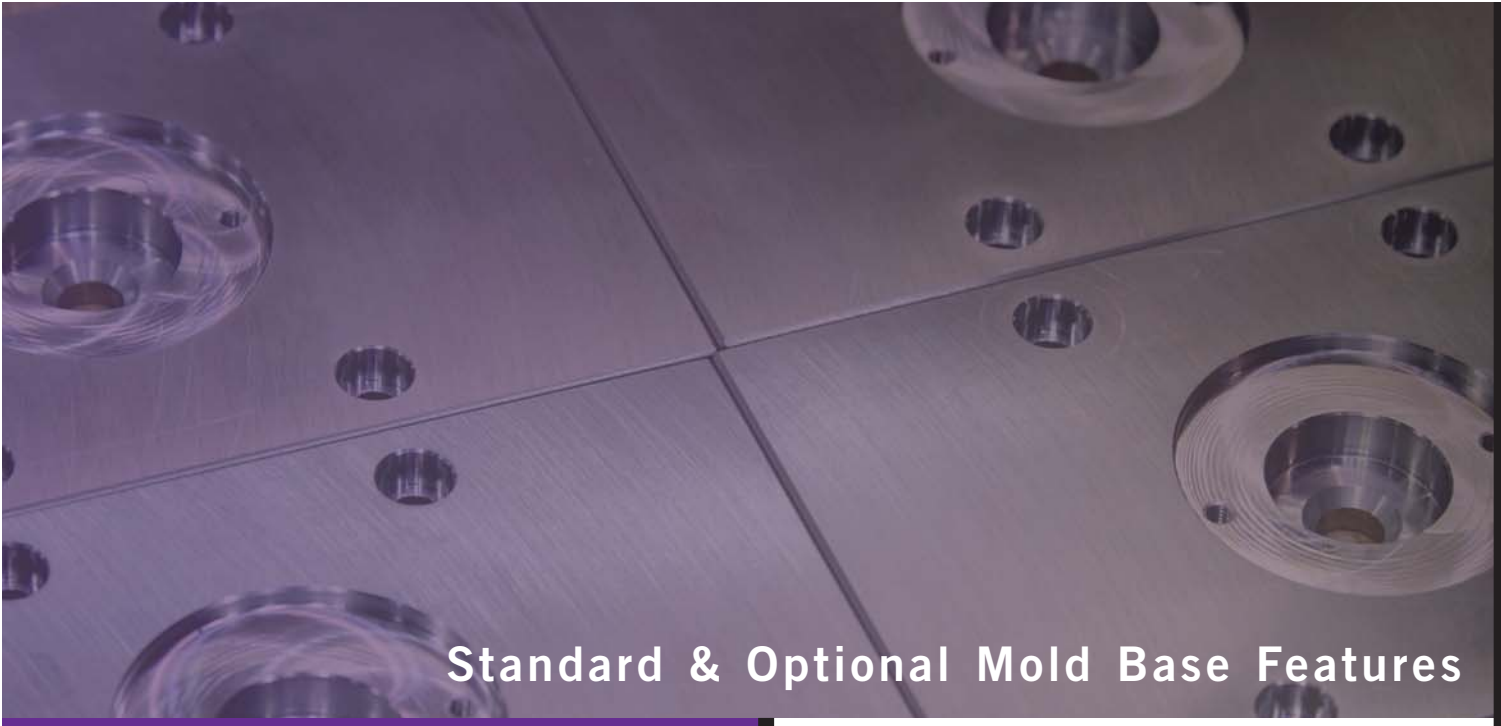

Standard & Optional Mold Base Features

CONFIGURE YOUR MOLD BASE TO YOUR EXACT NEEDS

Table of Contents

Feature Overview *140-145*
Locating Rings *146*
Sprue Bushings *147*
Upper & Lower Assembly Screws *148-149*
Clamp Slots *150*
Leader Pins & Bushings *151*
Return Pins, Stop Pins & Sprue Puller Pins *152-153*
Ejector Assembly Screws *156*
Ejector Housing & Cover *154-155*
Recommended Additional SHCS *157-158*
American Mold Base Features *159*
Self-Lubricating Bushings *160*
Pry Slots *161*
Guided Ejection Systems *162-163*
Lifting Hole Location *164*
Pockets *165*
Support Pillars *166-167*
Leader Pin Vents, Spring Pockets & Mold Straps *168*
Waterlines *169*
Three-Plate Extension Bushing *170*
Interlocks *171*
Insulator Sheets *172*

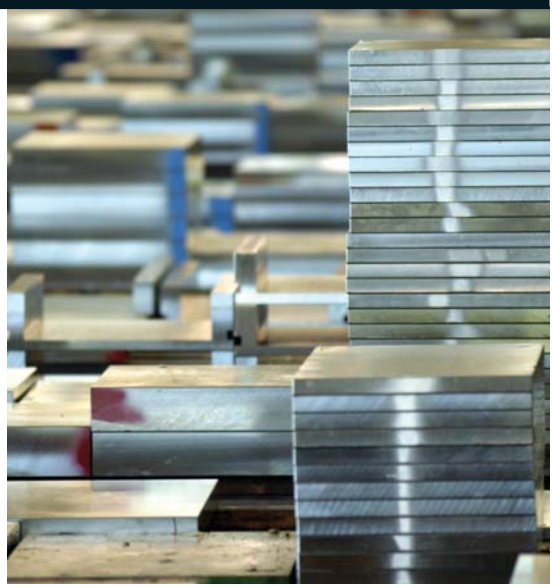

UNLIMITED Mold Base Selections

With **DME mold bases,** the only limit to your mold base is your imagination. Need guided ejection? Want vented leader pins? Prefer a three-piece ejector housing? DME Custom Mold Bases are available in an infinite number of possible configurations – one of them is perfect for your specific application.

All this and more, and at a competitive price. And, because it's from DME, you know it'll be done right the first time, on time – *every* time.

A whole new way of ordering

You can choose from an extensive menu of options to configure exactly the mold base you need. What some companies would call "a special" is no problem with DME mold bases.

Widest range of features and sizes available

DME Custom Mold Bases aren't just a limited range of common sizes – no one offers more in the industry. More sizes. More high-quality steel types. More plate thicknesses. More value-added features.

Made to order

What you want – not just what's in stock. That's the philosophy of the DME mold base offer. Our leading-edge manufacturing and workflow technologies enable us to build your custom-configured mold base with unparalleled speed. Most configurations can be shipped in only a few days.

Buy only the features you need

The DME mold base offer is driven by a simple premise: Your mold base is made up of only the specific features you want. No paying for "extras" that you didn't need. You can even specify the steel type – at the plate level – to enable customization to meet your objectives.

Why DME Mold Bases?

We understand the challenges you face. We know that anything that gives you an edge in today's competitive marketplace can enable a business advantage. That's why we work to get you a mold base that's configured exactly the way you need it, as quickly as possible, without price premiums.

American Mold Base Standard Features

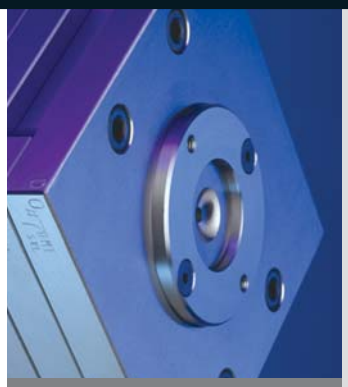

Locating Rings

The Locating Ring aligns the mold base to the stationary platen side of the press and positions the sprue bushing correctly.

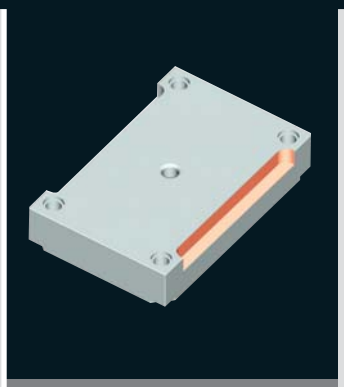

Clamp Slots

Clamp Slots facilitate clamping the mold to the platen of the press. DME mold bases offer four slot types to ensure the best fit for the requirements of your application.

Sprue Bushings

The Sprue Bushing provides a seat at the spherical radius for the nozzle of the press. This provides a path for the material from the nozzle to the runner system.

Leader Pins, Vents and Bushings

Leader Pins and Bushings align both halves of the mold at the parting line. Leader Pin Vents, which allow trapped air to escape from the mold, are designed into all 15-inch-and-wider series molds. When desired, they can be specified on smaller molds.

Upper and Lower Assembly Screws

Assembly screws are used to hold the plates of the upper and lower halves of the mold together. For simplicity, the upper and lower assembly screws are generally placed in similar positions.

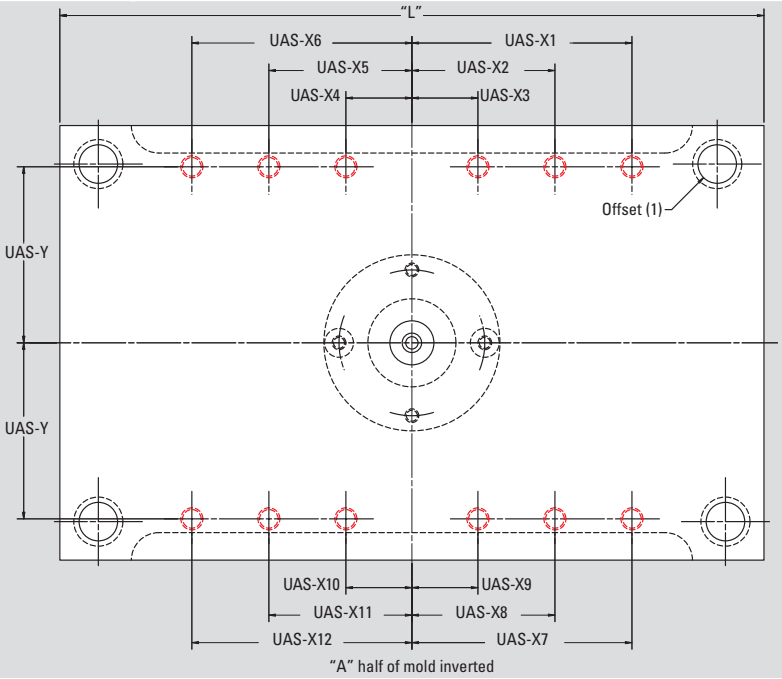

American Mold Base Standard Features

Ejector Housing and Cover

DME housing types fit all application demands. A one-piece welded housing is available for customers requiring maximum rigidity and robust durability. For maximum flexibility of configuration options, a three-piece housing is also available.

For additional operator safety, DME mold bases include an ejector housing cover, except when a longer length ejector bar is selected. The cover is fastened on both sides with 5/16-18 button-head cap screws.

S STANDARD FEATURES

Ejector Assembly Screws

Ejector assembly screws are used to hold the plate of the ejector assembly together. Recommended position will be provided but you can specify any different position.

S STANDARD FEATURES

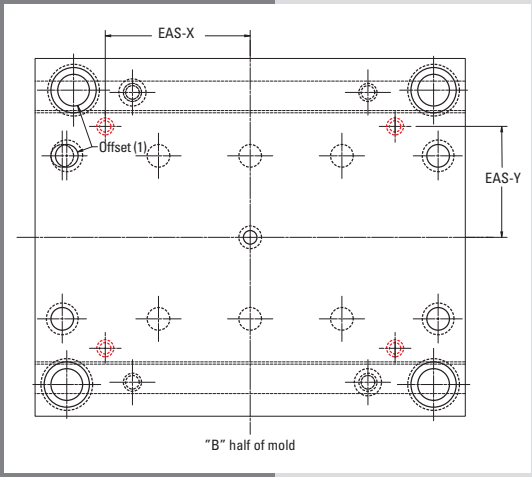

Return Pins, Stop Pins and Sprue Puller Pins

Return Pins are used to ensure correct return of the ejector assembly to the home position. DME return pins are precision-ground from superior quality hotwork die steel. Stop Pins arrest travel – preventing excessive wear and possible housing damage. The Sprue Puller Pin removes material from the Sprue Bushing at the end of the molding cycle.

S STANDARD FEATURES

Self-Lubricating Bushings

Saves design and moldmaking costs for lubrication and fittings. Reduces wear and galling. Lowers maintenance and repair costs. Eliminates contamination... ideal for "clean room" environments.

S STANDARD FEATURES

American Mold Base Optional Features

Guided Ejection Systems

5 5-DAY SHIPPING

Guided Ejection Systems hold the ejector assembly in alignment and support the weight of the ejector assembly throughout the molding cycle – greatly reducing wear on ejection components and preventing cocking of the ejector assembly.

Pry Slots

5 5-DAY SHIPPING

DME mold bases feature Pry Slots, installed in any plate specified, on the parting and/or non-parting line side. This provides handling ease when opening and/or disassembling a mold.

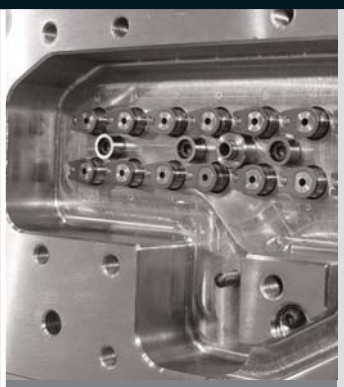

Pockets and Spring Pockets

5 5-DAY SHIPPING

Per customer specifications, DME finishes any type of cavity and core pockets. See the DME Mold Components catalog for spring free lengths and hole dimensions.

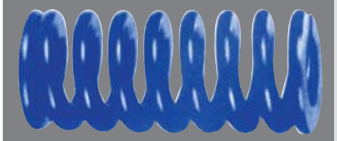

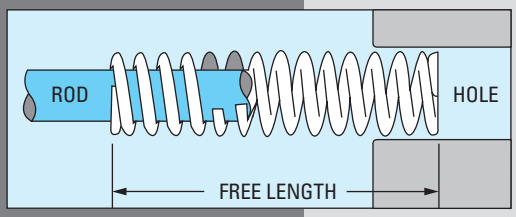

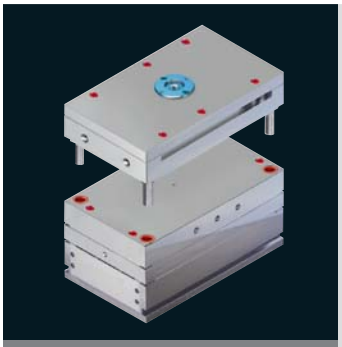

Lifting Holes

5 5-DAY SHIPPING

Lifting Holes can be used to install hoist rings for ease of handling. DME mold bases can be configured only with Lifting Holes which are appropriate for the specific mold base size. Refer to DME Mold Components catalog for a comprehensive selection of Hoist Rings.

Mold Strap Holes

5 5-DAY SHIPPING

Machined holes will be for mounting mold straps. Please provide desired positions and quantity (minimum 2).

American Mold Base Optional Features

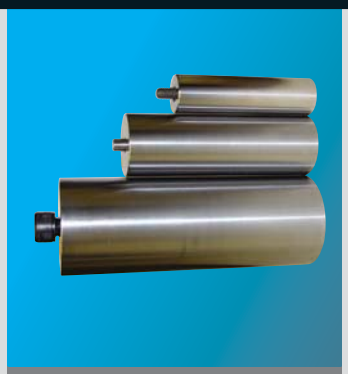

Support Pillars

5 5-DAY SHIPPING

Support pillars should be used liberally since they greatly increase the capacity of the mold to support the projected area of the cavities, runner and sprue. By providing additional support, they prevent deflection of the mold.

Interlocks

11 11-DAY SHIPPING

Provides positive alignment between adjacent plates when mold has one or multiple parting line openings. This provides close alignment for interlock cavities and cores in stripper plate type molds.

Waterlines

7 7-DAY SHIPPING

Waterlines and plugs are provided per customer specifications for optimal cooling efficiency.

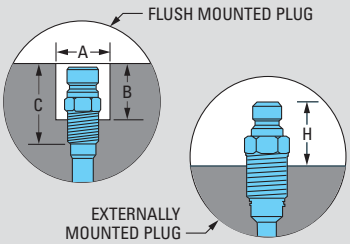

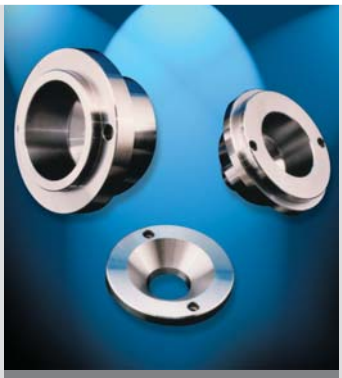

3-Plate Extension Bushings

7 7-DAY SHIPPING

These 3-plate extension bushings can save material, reduce cycle time and help prevent runner hang-ups in 3-plate molds.

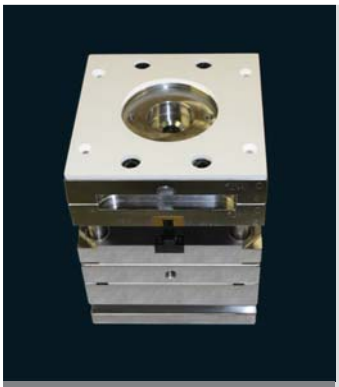

Insulator Sheets Standard or Pre-Machined

These sheets have excellent non-deformation characteristics and a compressive strength which is higher than asbestos and mica materials. Compression molded for high impact strength, they are supplied micro-finished top and bottom, parallel within ±.002.

Available in Standard or Pre-machined

Locating Rings

Features supplied as standard unless otherwise specified.

The Locating Ring aligns the mold base to the stationary platen side of the press and positions the sprue bushing correctly.

FOR QUOTING OR ORDERING, SPECIFY:

Locating Rings

❑ Standard 6501 D = 3.990

Other _____
(refer to table below and DME Mold Components catalog)

Position/Omission:

Position on center ❑ Center

or relocate to

X _____ Y _____

❑ Omit locating ring machining
❑ Omit locating ring
❑ Rotate tapped holes

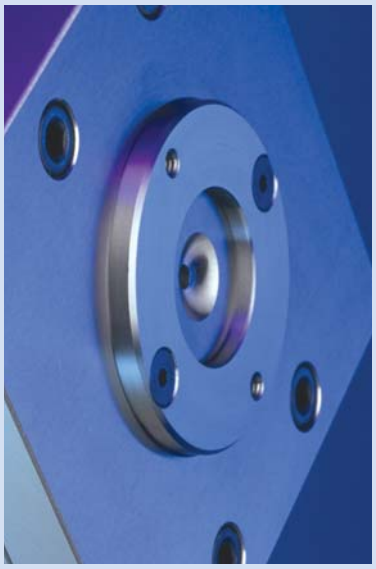

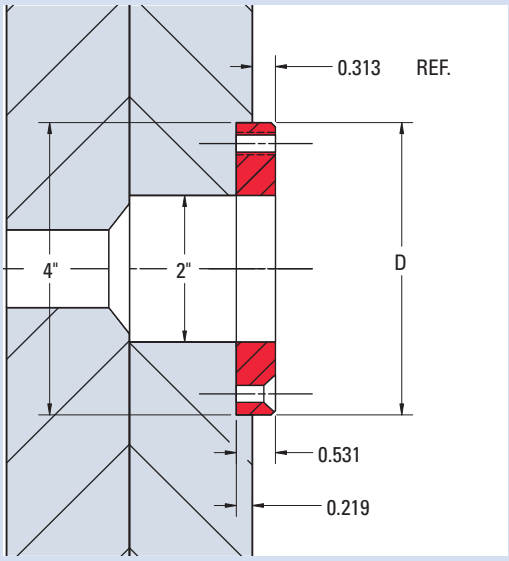

Locating ring #6501 shown; refer to DME Mold Components catalog for dimensions of other locating rings.

Locating Ring Options

ITEM NUMBER	Ø D	DESCRIPTION
6500	2.615	
6501	3.990	STANDARD SERIES
6501LN	3.990	LN SERIES
6502	4.990	
6503	2.000	
6504	3.990	CLAMP TYPE
6505LN	5.990	LN SERIES
6510	7.995	
6511	2.990	
6520	3.990	EXTENSION NOZZLE TYPE
6521	3.990	STANDARD SERIES
6522	3.990	EXTENSION NOZZLE TYPE
6524	3.990	CLAMP TYPE
6534**	1.574	TOP AND BOTTOM RING
6535	3.541	
6536	4.331	TOP RING
6537	4.331	BOTTOM RING
6541*	3.990	STANDARD SERIES
6544*	3.990	CLAMP TYPE

* For use with high-temperature insulator sheets.
** For use with 3.5 x 3.75 Arburg Mold Bases.
See DME Mold Components catalog for dimensions of other locating rings.

Sprue Bushings

The Sprue Bushing provides a seat at the spherical radius for the nozzle of the press. This provides a path for the material from the nozzle to the runner system.

Features supplied as standard unless otherwise specified.

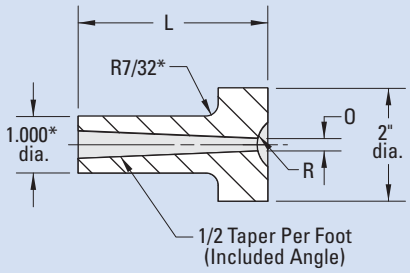

*For 88 & 812 mold base diameter is .750 and R equals 1/8

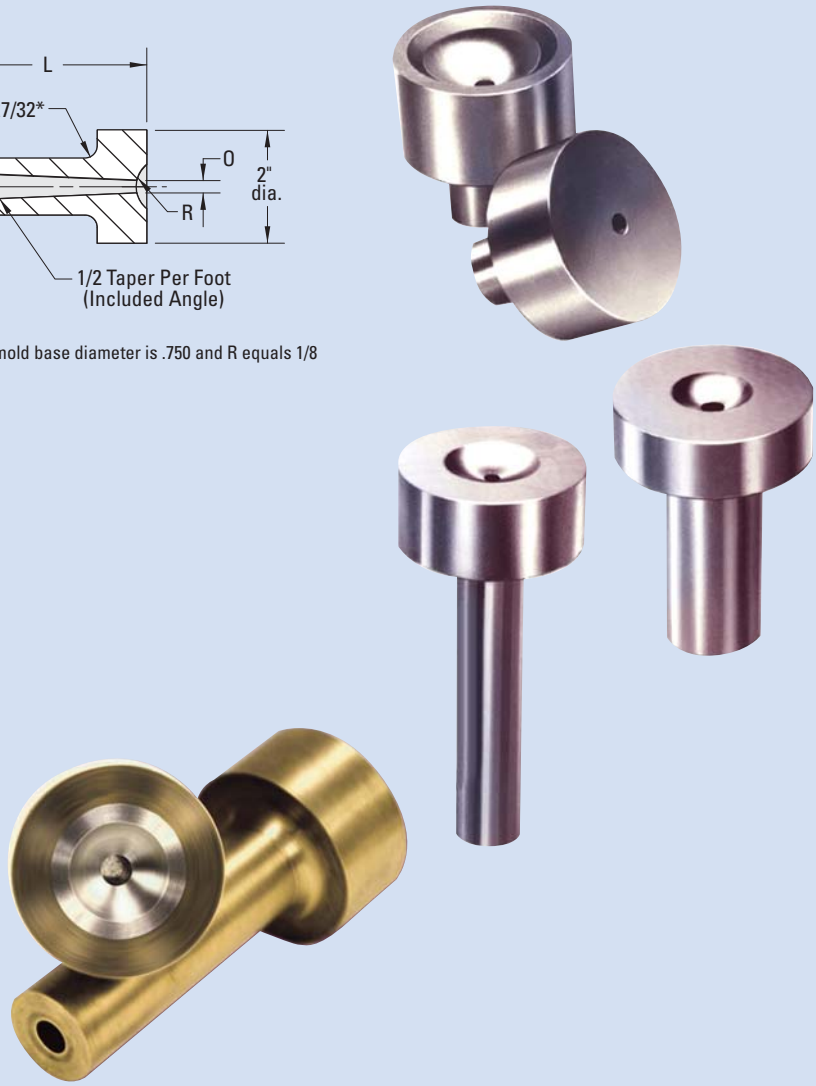

FOR QUOTING OR ORDERING, SPECIFY:

Sprue Bushing Series

Standard "B" or "U" (for 88 and 812 mold bases) Series or select any standard DME sprue bushings including DME high-performance sprue bushings.

O (Orifice) _____

R (Radius) _____

NOTE: Refer to DME Mold Components catalog for more information on our complete line of sprue bushings.

Position/Omission:

Position on center ❑ Center

or relocate to

X _____ Y _____

❑ Omit sprue bushing hole

❑ Omit sprue bushing part

Upper and Lower Assembly Screws

Features supplied as standard unless otherwise specified.

Assembly screws are used to hold the plates of the upper and lower halves of the mold together. For simplicity, the upper and lower assembly screws are generally placed in similar positions.

FOR QUOTING OR ORDERING, SPECIFY:

Upper Assembly Screws

Recommended position from table (see opposite page) provided standard. If a different position is required, specify below.

Position: ❑ **STD** ❑ **Specify**

UASx1 _____
UASx2 _____
UASx3 _____
UASx4 _____
UASx5 _____
UASx6 _____
UASx7 _____
UASx8 _____
UASx9 _____
UASx10 _____
UASx11 _____
UASx12 _____
UASy _____
Omit hole _____
Omit part _____

❑ Omit upper assembly holes

❑ Omit upper assembly screws

Lower Assembly Screws

Recommended position from table (see opposite page) provided standard. If a different position is required, specify below.

Position: ❑ **STD** ❑ **Specify**

LASx1 _____
LASx2 _____
LASx3 _____
LASx4 _____
LASx5 _____
LASx6 _____
LASx7 _____
LASx8 _____
LASx9 _____
LASx10 _____
LASx11 _____
LASx12 _____
LASy _____
Omit Hole _____
Omit Part _____

❑ Omit lower assembly holes

❑ Omit lower assembly screws

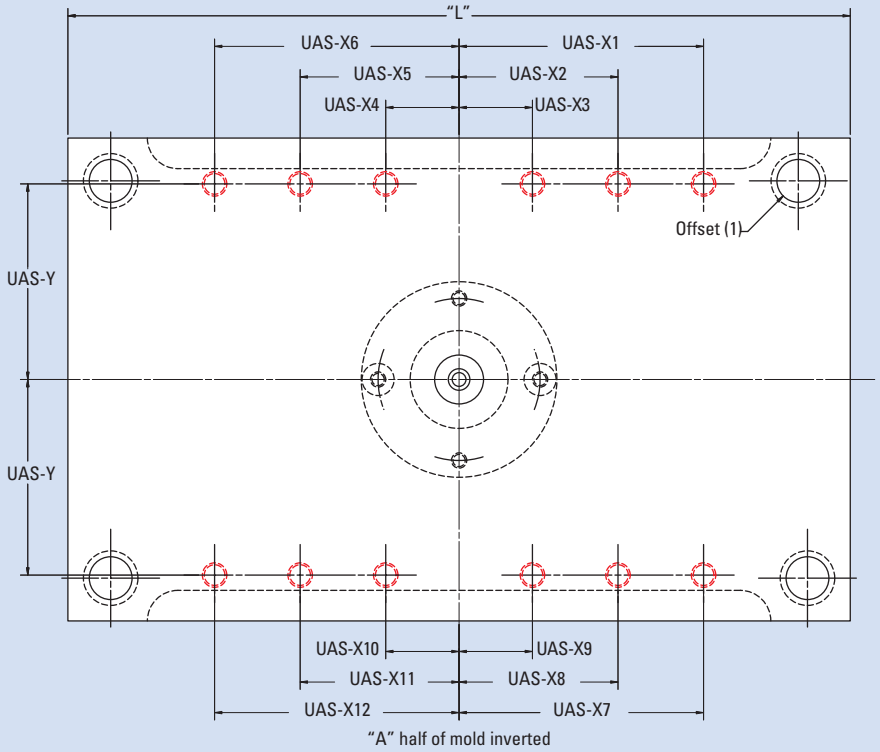

"A" half of mold inverted

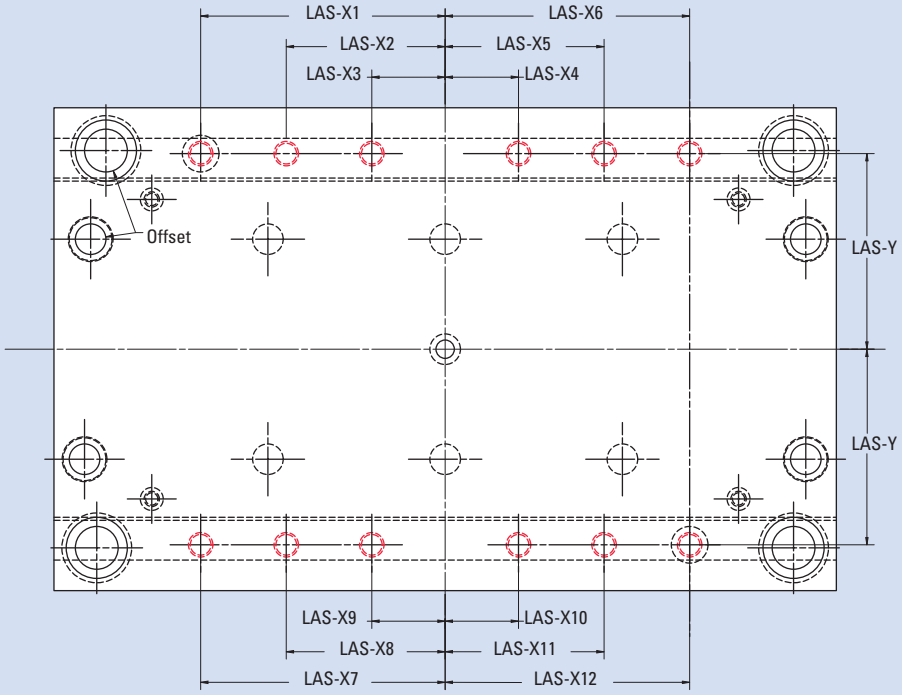

"B" half of mold

Upper and Lower Assembly Screw Positions

BASE SIZE	SCREW SIZE	UASy LASy	UASx1 LASx1	UASx2 LASx2	UASx3 LASx3	UASx4 LASx4	UASx5 LASx5	UASx6 LASx6	UASx7 LASx7	UASx8 LASx8	UASx9 LASx9	UASx10 LASx10	UASx11 LASx11	UASx12 LASx12
88	1/2-13	3.125	1.375	—	—	—	—	1.375	1.375	—	—	—	—	1.375
812	1/2-13	3.125	2.250	—	—	—	—	2.250	2.250	—	—	—	—	2.250
108	1/2-13	4.000	1.875	—	—	—	—	1.875	1.875	—	—	—	—	1.875
1012	1/2-13	4.000	3.250	—	—	—	—	3.250	3.250	—	—	—	—	3.250
1016	1/2-13	4.000	5.000	—	—	—	—	5.000	5.000	—	—	—	—	5.000
1020	1/2-13	4.000	6.500	—	—	1.000	—	6.500	6.500	—	1.000	—	—	6.500
1112	1/2-13	4.469	3.188	—	—	—	—	3.188	3.188	—	—	—	—	3.188
1114	1/2-13	4.469	3.188	—	—	—	—	3.188	3.188	—	—	—	—	3.188
1118	1/2-13	4.469	5.875	—	—	1.000	—	5.875	5.875	—	1.000	—	—	5.875
1123	1/2-13	4.469	8.625	—	3.188	3.188	—	8.625	8.625	—	3.188	3.188	—	8.625
1212	1/2-13	4.969	2.812	—	—	—	—	2.812	2.812	—	—	—	—	2.812
1215	1/2-13	4.969	4.500	—	—	1.000	—	4.500	4.500	—	1.000	—	—	4.500
1220	1/2-13	4.969	6.625	—	—	1.000	—	6.625	6.625	—	1.000	—	—	6.625
1223	1/2-13	4.969	8.625	—	2.812	2.812	—	8.625	8.625	—	2.812	2.812	—	8.625
1315	1/2-13	5.719	4.500	—	—	1.000	—	4.500	4.500	—	1.000	—	—	4.500
1318	1/2-13	5.719	5.438	—	—	1.000	—	5.438	5.438	—	1.000	—	—	5.438
1321	1/2-13	5.719	6.750	—	—	1.000	—	6.750	6.750	—	1.000	—	—	6.750
1323	1/2-13	5.719	8.125	—	2.750	2.750	—	8.125	8.125	—	2.750	2.750	—	8.125
1326	1/2-13	5.719	9.375	—	3.250	3.250	—	9.375	9.375	—	3.250	3.250	—	9.375
1329	1/2-13	5.719	11.125	—	3.250	3.250	—	11.125	11.125	—	3.250	3.250	—	11.125
1518	1/2-13	6.469	5.438	—	—	1.000	—	5.438	5.438	—	1.000	—	—	5.438
1524	1/2-13	6.469	7.750	—	2.750	2.750	—	7.750	7.750	—	2.750	2.750	—	7.750
1529	1/2-13	6.469	10.625	—	3.688	3.688	—	10.625	10.625	—	3.688	3.688	—	10.625
1616	1/2-13	6.969	4.250	—	—	1.000	—	4.250	4.250	—	1.000	—	—	4.250
1620	1/2-13	6.969	6.250	—	—	1.000	—	6.250	6.250	—	1.000	—	—	6.250
1623	1/2-13	6.969	8.000	—	2.750	2.750	—	8.000	8.000	—	2.750	2.750	—	8.000
1626	1/2-13	6.969	9.250	—	3.125	3.125	—	9.250	9.250	—	3.125	3.125	—	9.250
1629	1/2-13	6.969	11.000	—	3.688	3.688	—	11.000	11.000	—	3.688	3.688	—	11.000
1635	1/2-13	6.969	14.000	8.500	2.875	2.875	8.500	14.000	14.000	8.500	2.875	2.875	8.500	14.000
1724	1/2-13	7.281	7.750	—	2.750	2.750	—	7.750	7.750	—	2.750	2.750	—	7.750
1729	1/2-13	7.281	10.625	—	3.688	3.688	—	10.625	10.625	—	3.688	3.688	—	10.625
1818	1/2-13	7.969	5.438	—	—	1.000	—	5.438	5.438	—	1.000	—	—	5.438
1820	1/2-13	7.969	6.438	—	—	1.000	—	6.438	6.438	—	1.000	—	—	6.438
1823	1/2-13	7.969	8.125	—	2.750	2.750	—	8.125	8.125	—	2.750	2.750	—	8.125
1826	1/2-13	7.969	9.375	—	3.125	3.125	—	9.375	9.375	—	3.125	3.125	—	9.375
1829	1/2-13	7.969	11.125	—	3.688	3.688	—	11.125	11.125	—	3.688	3.688	—	11.125
1835	1/2-13	7.969	14.125	8.500	2.875	2.875	8.500	14.125	14.125	8.500	2.875	2.875	8.500	14.125
1924	1/2-13	8.781	7.750	—	2.750	2.750	—	7.750	7.750	—	2.750	2.750	—	7.750
1929	1/2-13	8.781	11.125	—	3.688	3.688	—	11.125	11.125	—	3.688	3.688	—	11.125
1935	1/2-13	8.781	14.125	8.500	2.875	2.875	8.500	14.125	14.125	8.500	2.875	2.875	8.500	14.125
2424	5/8-11	10.844	7.750	—	2.750	2.750	—	7.750	7.750	—	2.750	2.750	—	7.750
2429	5/8-11	10.844	10.625	—	3.688	3.688	—	10.625	10.625	—	3.688	3.688	—	10.625
2435	5/8-11	10.844	13.625	8.500	2.750	2.750	8.500	13.625	13.625	8.500	2.750	2.750	8.500	13.625

Clamp Slots

Features supplied as standard unless otherwise specified.

Clamp Slots facilitate clamping the mold to the platen of the press. DME American Standard Mold Bases offer four slot types (shown below) to ensure the best fit for the requirements of your application.

FOR QUOTING OR ORDERING, SPECIFY:

Clamp Slot Type

- ❑ **Type A** - Machined when Top Clamping Plate is 0.875 or 1.375
- ❑ **Type B** - Machined in plates that are 2.375 or thicker
- ❑ **Type C** - Machined only when specified by a customer and top clamp plate is 1.375
- ❑ **Type D** - Machined plates that are 1.875 thick

Other options include:

- ❑ Omit upper clamp slot
- ❑ Omit lower clamp slot (3-piece housing supplied)
- ❑ Machine entire length
- ❑ Machine all four sides

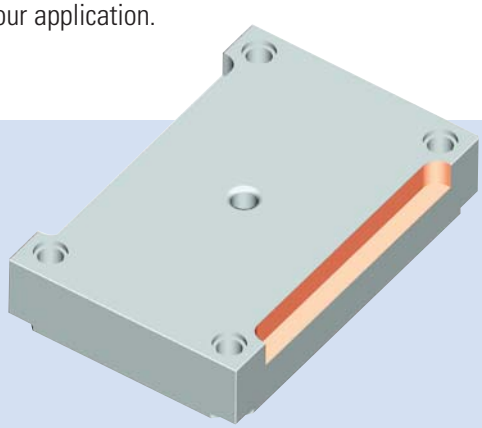

Type A

Machined when Top Clamping Plate is 0.875 or 1.375

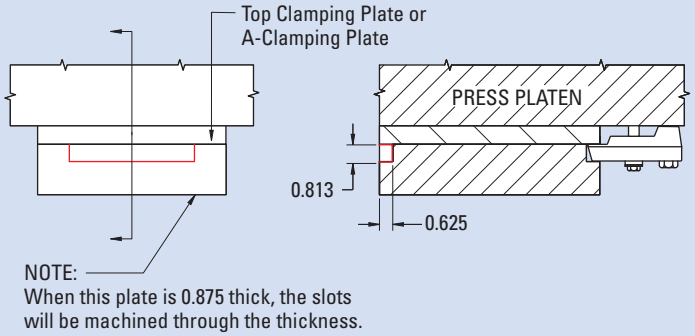

Type B

Machined in plates that are 2.375 or thicker

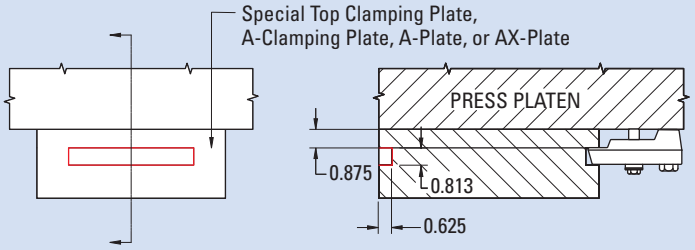

Type C

Machined only when specified by a customer

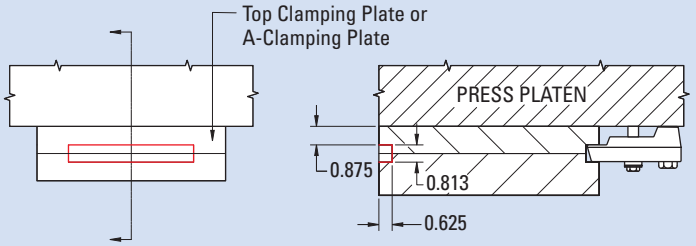

Type D

Machined plates that are 1.875 thick

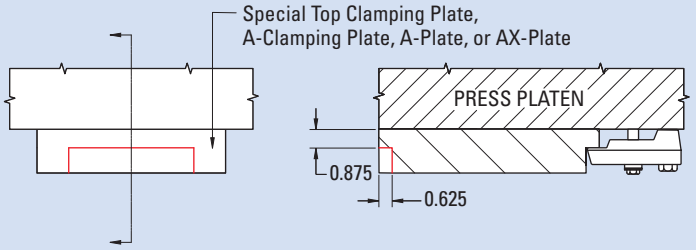

Guide Pins and Bushings

Guide Pins and Bushings align both halves of the mold at the parting line.

Features supplied as standard unless otherwise specified.

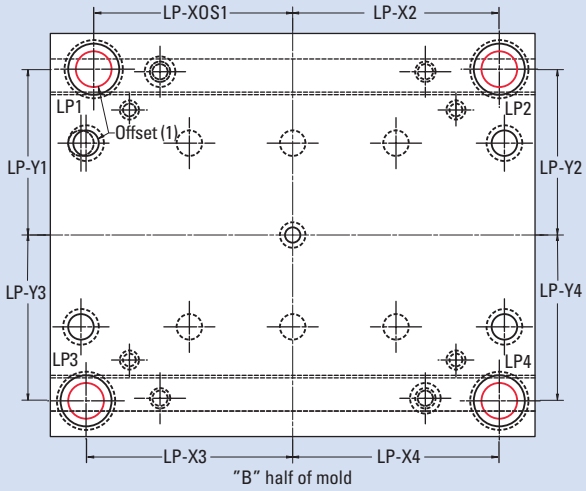

Guide Pin Positions

SIZE	DIA	LPxos	LPx	LPy
88	0.750	3.000	3.125	3.125
812	0.750	5.000	5.125	3.125
108	0.750	2.938	3.125	4.062
1012	0.875	4.875	5.062	4.062
1016	0.875	6.938	7.125	4.062
1020	0.875	8.938	9.125	4.062
1112	0.875	4.938	5.125	4.562
1114	0.875	5.938	6.125	4.562
1118	0.875	7.938	8.125	4.562
1123	0.875	10.688	10.875	4.562
1212	1.000	4.625	4.812	5.000
1215	1.000	6.125	6.312	5.000
1220	1.000	8.625	8.812	5.000
1223	1.000	10.375	10.562	5.000
1315	1.000	6.125	6.312	5.688
1318	1.000	7.375	7.562	5.688
1321	1.000	8.750	8.938	5.688
1323	1.000	10.125	10.312	5.688
1326	1.000	11.375	11.562	5.688
1329	1.000	13.125	13.312	5.688
1518	1.250	7.375	7.562	6.062
1524	1.250	10.250	10.438	6.062
1529	1.250	13.125	13.312	6.062
1616	1.250	6.375	6.562	6.562
1620	1.250	8.375	8.562	6.562
1623	1.250	10.125	10.312	6.562
1626	1.250	11.375	11.562	6.562
1629	1.250	13.125	13.312	6.562
1635	1.250	16.125	16.312	6.562
1724	1.250	10.250	10.438	6.812
1729	1.250	13.125	13.312	6.812
1818	1.250	7.375	7.562	7.562
1820	1.250	8.375	8.562	7.562
1823	1.250	10.125	10.312	7.562
1826	1.250	11.375	11.562	7.562
1829	1.250	13.125	13.312	7.562
1835	1.250	16.125	16.312	7.562
1924	1.250	10.250	10.438	8.312
1929	1.250	13.125	13.312	8.312
1935	1.250	16.125	16.312	8.312
2424	1.500	10.062	10.250	10.250
2429	1.500	12.938	13.125	10.250
2435	1.500	15.938	16.125	10.250

FOR QUOTING OR ORDERING, SPECIFY:

Guide Pins

Diameter: ❑ **STD** ❑ **Specify**

Recommended diameter from table provided standard. If a different diameter is required, specify below.

Diameter Options:

❑ 0.750 ❑ 2.000
❑ 0.875 ❑ 2.500
❑ 1.000 ❑ 3.000
❑ 1.500

Length: ❑ **STD** ❑ **Specify**

Recommended pin length for A-Series mold base (A Plate Thickness + B Plate Thickness + 1/2) provided standard. If a different pin length is required, specify below.

Specify Pin Length: _____

Position: ❑ **STD** ❑ **Specify**

Recommended position from table provided standard (bushing location will correspond). If a different position is required, specify below.

LPxos1 _____ LPy1 _____
LPx2 _____ LPy2 _____
LPx3 _____ LPy3 _____
LPx4 _____ LPy4 _____

Guide Pin Bushings

Type/Omission:

❑ Steel
❑ Bronze
❑ Self-Lubricating
❑ Omit Machining for Leader Pin and Bushings
❑ Omit Guide Pin and Bushing

Return Pins, Stop Pins and Sprue Puller Pins

Features supplied as standard unless otherwise specified.

FOR QUOTING OR ORDERING, SPECIFY:

Return Pins

Position: ❑ **STD** ❑ **Specify**

Recommended position from table provided standard. If a different position is required, specify below.

❑ **Position 1**
Standard outboard position for maximum space.

❑ **Position 2**
Inboard position to allow for spring pockets.

Position/Omission:

RPxos1 _____ RPy1 _____
RPx2 _____ RPy2 _____
RPx3 _____ RPy3 _____
RPx4 _____ RPy4 _____

❑ Omit machining for return pins
❑ Omit return pins

Length: ❑ **STD** ❑ **Specify**_____
Diameter: ❑ **STD** ❑ **Specify**_____

Sprue Puller Pins

Diameter: ❑ **STD** ❑ **Specify**

Recommended diameter provided standard (.375 diameter, except 88 and 812 are .250 diameter). If a different diameter is required, specify below.

❑ .250
❑ .3125
❑ .375

Length: ❑ **STD** ❑ **Specify**

Position/Omission:

Position on center ❑ Center

or relocate to

X _____ Y _____

❑ Omit machining for sprue puller pin
❑ Omit sprue puller pin

Return Pins are used to ensure correct return of the ejector assembly to the home position. DME return pins are precision-ground from superior quality hotwork die steel.

Stop Pins arrest travel – preventing excessive wear and possible housing damage.

The Sprue Puller Pin removes material from the Sprue Bushing at the end of the molding cycle. It's positioned directly below the Sprue Bushing and is retained between the ejector bar and ejector retainer.

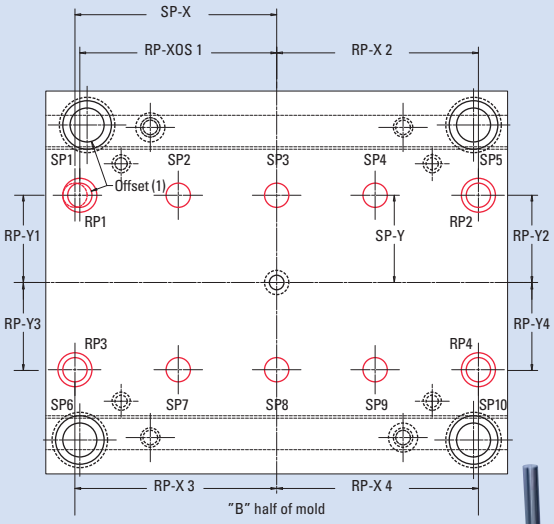

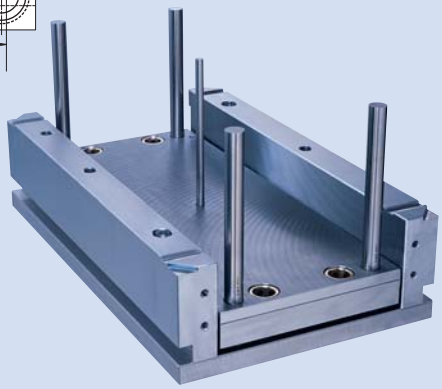

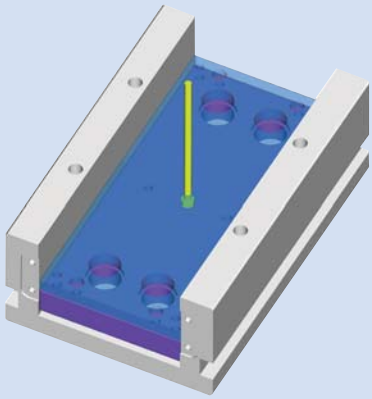

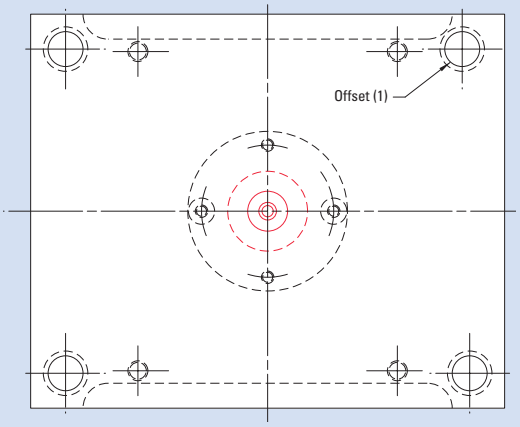

Return Pins, Stop Pins and Sprue Puller Pins

Mold Base Return Pin and Stop Pin Positions

BASE SIZE	RP DIAMETER (RECOMMENDED)	RP-y SP-y	POSITION 1		POSITION 2		SP-x1 SP-x6	SP-x2 SP-x7	SP-x3 SP-x8	SP-x4 SP-x9	SP-x5 SP-x10
			RP-xos	RP-x	RP-xos	RP-x					
88	0.500	1.500	3.250	3.375	3.188	3.312	3.375				3.375
812	0.500	1.500	5.250	5.375	5.188	5.312	5.375		On Center		5.375
108	0.625	2.250	3.250	3.375	3.125	3.250	3.375				3.375
1012	0.625	2.250	5.188	5.312	5.063	5.188	5.312		On Center		5.312
1016	0.625	2.250	7.250	7.375	7.125	7.250	7.375	2.500		2.500	7.375
1020	0.625	2.250	9.250	9.375	9.125	9.250	9.375	3.125		3.125	9.375
1112	0.625	2.812	5.250	5.375	5.125	5.250	5.375		On Center		5.375
1114	0.625	2.812	6.250	6.375	6.125	6.250	6.375		On Center		6.375
1118	0.625	2.812	8.250	8.375	8.125	8.250	8.375		On Center		8.375
1123	0.625	2.812	11.000	11.125	10.875	11.000	11.125	3.750		3.750	11.125
1212	0.750	3.188	5.250	5.375	5.000	5.125	5.375		On Center		5.375
1215	0.750	3.188	6.750	6.875	6.500	6.625	6.875	2.250		2.250	6.875
1220	0.750	3.188	9.250	9.375	9.000	9.125	9.375	3.094		3.094	9.375
1223	0.750	3.188	11.000	11.125	10.750	10.875	11.125	3.750		3.750	11.125
1315	0.750	3.812	6.750	6.875	6.500	6.625	6.875	2.250		2.250	6.875
1318	0.750	3.812	8.250	8.375	8.000	8.125	8.375	2.750		2.750	8.375
1321	0.750	3.812	9.500	9.625	9.375	9.500	9.625	4.000		4.000	9.625
1323	0.750	3.812	10.875	11.000	10.750	10.875	11.000	4.000		4.000	11.000
1326	0.750	3.812	12.125	12.250	12.000	12.125	12.250	4.000		4.000	12.250
1329	0.750	3.812	13.875	14.000	13.750	13.875	14.000	5.000		5.000	14.000
1518	0.750	3.875	8.125	8.250	7.938	8.062	8.250	2.750		2.750	8.250
1524	0.750	3.875	11.000	11.125	10.875	11.000	11.125	3.750		3.750	11.125
1529	0.750	3.875	13.875	14.000	13.750	13.875	14.000	4.688		4.688	14.000
1616	0.750	4.375	7.125	7.250	7.000	7.125	7.250	2.375		2.375	7.250
1620	0.750	4.375	9.125	9.250	9.000	9.125	9.250	3.062		3.062	9.250
1623	0.750	4.375	10.875	11.000	10.750	10.875	11.000	4.000		4.000	11.000
1626	0.750	4.375	12.125	12.250	12.000	12.125	12.250	4.000		4.000	12.250
1629	0.750	4.375	13.875	14.000	13.750	13.875	14.000	4.688		4.688	14.000
1635	0.750	4.375	16.875	17.000	16.750	16.875	17.000	8.500	On Center	8.500	17.000
1724	0.750	4.625	11.000	11.125	10.875	11.000	11.125	3.750		3.750	11.125
1729	0.750	4.625	13.875	14.000	13.750	13.875	14.000	4.688		4.688	14.000
1818	0.750	5.375	8.125	8.250	8.000	8.125	8.250	2.750		2.750	8.250
1820	0.750	5.375	9.125	9.250	9.000	9.125	9.250	3.062		3.062	9.250
1823	0.750	5.375	10.875	11.000	10.750	10.875	11.000	4.000		4.000	11.000
1826	0.750	5.375	12.125	12.250	12.000	12.125	12.250	4.000		4.000	12.250
1829	0.750	5.375	13.875	14.000	13.750	13.875	14.000	4.688		4.688	14.000
1835	0.750	5.375	16.875	17.000	16.750	16.875	17.000	8.500	On Center	8.500	17.000
1924	0.750	6.125	11.000	11.125	10.875	11.000	11.125	3.750		3.750	11.125
1929	0.750	6.125	13.875	14.000	13.750	13.875	14.000	4.688		4.688	14.000
1935	0.750	6.125	16.875	17.000	16.750	16.875	17.000	8.500	On Center	8.500	17.000
2424	0.750	7.750	11.000	11.125	10.875	11.000	11.125	3.750		3.750	11.125
2429	0.750	7.750	13.875	14.000	13.750	13.875	14.000	4.688		4.688	14.000
2435	0.750	7.750	16.875	17.000	16.750	16.875	17.000	8.500	On Center	8.500	17.000

Ejector Housing and Cover

Features supplied as standard unless otherwise specified.

Ejector Housing Cover

For additional operator safety, DME Standard Mold Bases include an ejector housing cover, except when a longer length ejector bar is selected. The cover is fastened on both sides with 5/16-18 button-head cap screws.

Ejector Housing

A wide selection of housing types are certain to fit all application demands. A one-piece welded housing is available for customers requiring maximum rigidity and robust durability. For maximum flexibility of configuration options, a three-piece housing is also available.

FOR QUOTING OR ORDERING, SPECIFY:

Ejector Housing Type

- ❑ **Welded Housing**

Available in #1 steel

- ❑ **3-Piece Housing**
- ❑ DME #1 steel
- ❑ DME #7 steel

Riser Height:

- ❑ 2.500
- ❑ 3.000
- ❑ 3.500
- ❑ 4.000
- ❑ 4.500
- ❑ 5.000*
- ❑ 5.500*
- ❑ 6.000*
- ❑ Other _____

*Available in 3-Piece only

Bottom Clamp Plate Thickness for 3-Piece Housing

- ❑ 0.875
- ❑ 1.375
- ❑ 1.875
- ❑ 2.375
- ❑ 2.875
- ❑ 3.375
- ❑ 3.875
- ❑ 4.875
- ❑ 5.875
- ❑ Other _____

Ejector Housing and Cover

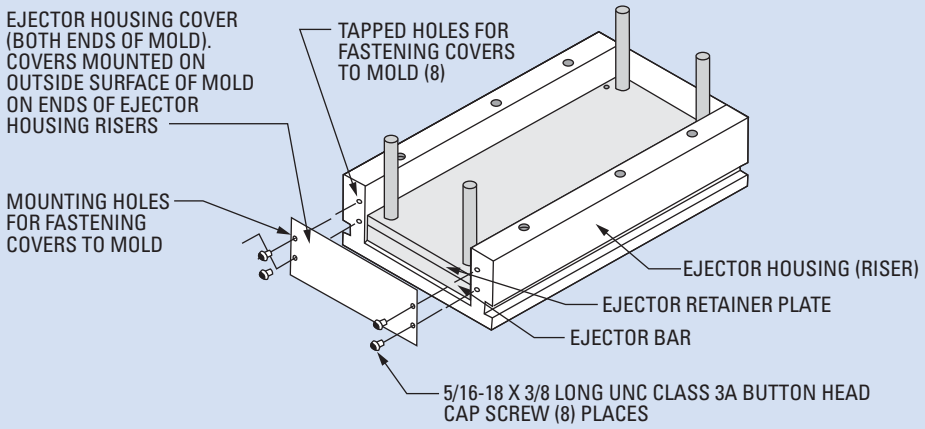

Recommended Dimensions for Drilling and Tapping

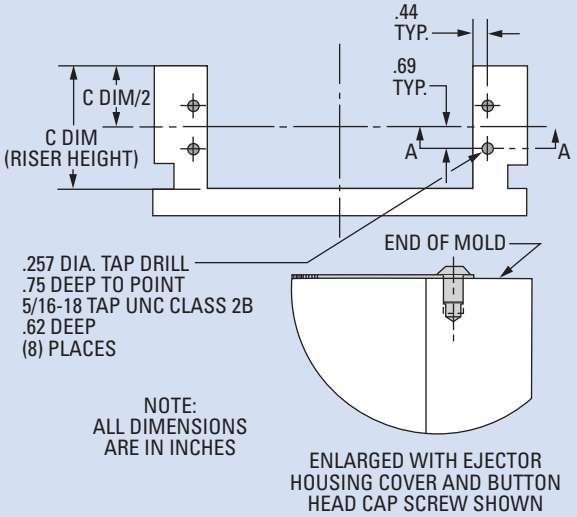

Ejector Housing Cover Item Numbers

HOUSING WIDTH CODE	RISER HEIGHT CODE							
	25	30	35	40	45	50	55	60
08	EHCS0825	EHCS0830	EHCS0835	EHCS0840	EHCS0845	EHCS0850	EHCS0855	EHCS0860
10	EHCS1025	EHCS1030	EHCS1035	EHCS1040	EHCS1045	EHCS1050	EHCS1055	EHCS1060
11	EHCS1125	EHCS1130	EHCS1135	EHCS1140	EHCS1145	EHCS1150	EHCS1155	EHCS1160
12	EHCS1225	EHCS1230	EHCS1235	EHCS1240	EHCS1245	EHCS1250	EHCS1255	EHCS1260
13	EHCS1325	EHCS1330	EHCS1335	EHCS1340	EHCS1345	EHCS1350	EHCS1355	EHCS1360
15	EHCS1525	EHCS1530	EHCS1535	EHCS1540	EHCS1545	EHCS1550	EHCS1555	EHCS1560
16	EHCS1625	EHCS1630	EHCS1635	EHCS1640	EHCS1645	EHCS1650	EHCS1655	EHCS1660
17	EHCS1725	EHCS1730	EHCS1735	EHCS1740	EHCS1745	EHCS1750	EHCS1755	EHCS1760
18	EHCS1825	EHCS1830	EHCS1835	EHCS1840	EHCS1845	EHCS1850	EHCS1855	EHCS1860
19	EHCS1925	EHCS1930	EHCS1935	EHCS1940	EHCS1945	EHCS1950	EHCS1955	EHCS1960
24	EHCS2425	EHCS2430	EHCS2435	EHCS2440	EHCS2445	EHCS2450	EHCS2455	EHCS2460

NOTE: EHC item numbers are assembled from the prefix EHCS plus the width code and thickness code.
Example: EHCS0825 would be the cover for an 88 or 812 with a riser of 2.5".

Ejector Assembly Screws

Features supplied as standard unless otherwise specified.

Ejector Assembly Screws are used to hold the plates of the ejector assembly together (including the ejector bar and retainer).

FOR QUOTING OR ORDERING, SPECIFY:

Ejector Assembly Screws

Position: ❑ **STD** ❑ **Specify**

Recommended position from table provided standard. If a different position is required, specify below.

EASx _____

EASy _____

❑ Omit upper assembly holes

❑ Omit upper assembly screws

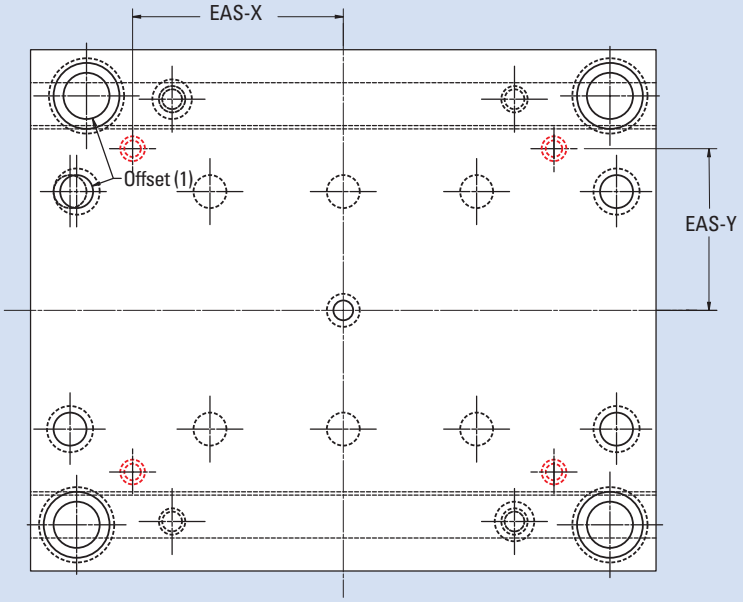

"B" half of mold

Ejector Assembly Screw Positions

BASE SIZE	SCREW SIZE	EASx	EASy	BASE SIZE	SCREW SIZE	EASx	EASy
88	5/16-18	3.375	2.250	1518	3/8-16	8.312	5.000
812	5/16-18	5.375	2.250	1524	3/8-16	11.250	5.000
108	5/16-18	3.375	3.062	1529	3/8-16	14.125	5.000
1012	5/16-18	5.312	3.062	1616	3/8-16	7.375	5.438
1016	5/16-18	7.375	3.062	1620	3/8-16	9.375	5.438
1020	5/16-18	9.375	3.062	1623	3/8-16	11.125	5.438
1112	5/16-18	4.562	3.312	1626	3/8-16	12.375	5.438
1114	5/16-18	5.562	3.312	1629	3/8-16	14.125	5.438
1118	5/16-18	7.562	3.312	1635	3/8-16	17.125	5.438
1123	5/16-18	10.312	3.312	1724	3/8-16	11.250	5.750
1212	5/16-18	4.500	3.812	1729	3/8-16	14.125	5.750
1215	5/16-18	6.000	3.812	1818	3/8-16	8.375	6.438
1220	5/16-18	8.500	3.812	1820	3/8-16	9.375	6.438
1223	5/16-18	10.250	3.812	1823	3/8-16	11.125	6.438
*1315	3/8-16	5.812	4.250	1826	3/8-16	12.375	6.438
*1318	3/8-16	7.312	4.250	1829	3/8-16	14.125	6.438
1321	3/8-16	8.688	4.250	1835	3/8-16	17.125	6.438
1323	3/8-16	10.062	4.250	1924	1/2-13	11.250	7.250
1326	3/8-16	11.312	4.250	1929	1/2-13	14.125	7.250
1329	3/8-16	13.062	4.250	1935	1/2-13	17.125	7.250
				2424	1/2-13	11.250	8.875
				2429	1/2-13	14.125	8.875
				2435	1/2-13	17.125	8.875

*New X dimension effective 10/02.

Minimum Recommended Additional Assembly SHCS

MOLD BASE SIZE	A PLATE THICKNESS	EXISTING TOTAL NUMBER OF SHCS	MOLDING MACHINE FORCE (TONS) / MOLD OPENING FORCE (LBS.)										
			15 THROUGH 400 3000 THROUGH 80,000	425 85,000	450 90,000	475 95,000	500 100,000	525 105,000	550 110,000	575 115,000	600 120,000	625 125,000	650 130,000
88	.875 1.375 TO 5.875	4 4	0 0	+1 0	+1 0	+1 0	+1 0	+1 +1	+2 +1	+2 +1	+2 +1	+2 +1	+2 +2
812	.0875 1.375 TO 5.875	4 4	0 0	+1 0	+1 0	+1 0	+1 0	+1 +1	+2 +1	+2 +1	+2 +1	+2 +1	+2 +2
108	.875 1.375 TO 5.875	4 4	0 0	+1 0	+1 0	+1 0	+1 0	+1 +1	+2 +1	+2 +1	+2 +1	+2 +1	+2 +2
1012	.875 1.375 TO 5.875	4 4	0 0	+1 0	+1 0	+1 0	+1 0	+1 +1	+2 +1	+2 +1	+2 +1	+2 +1	+2 +2
1016	.875 1.375 TO 5.875	4 4	0 0	+1 0	+1 0	+1 0	+1 0	+1 +1	+2 +1	+2 +1	+2 +1	+2 +1	+2 +2
1020	.875 1.375 TO 5.875	4 4	0 0	+1 0	+1 0	+1 0	+1 0	+1 +1	+2 +1	+2 +1	+2 +1	+2 +1	+2 +2
1112	.875 1.375 TO 5.875	4 4	0 0	+1 0	+1 0	+1 0	+1 0	+1 +1	+2 +1	+2 +1	+2 +1	+2 +1	+2 +2
1114	.875 1.375 TO 5.875	4 4	0 0	+1 0	+1 0	+1 0	+1 0	+1 +1	+2 +1	+2 +1	+2 +1	+2 +1	+2 +2
1118	.875 1.375 TO 5.875	4 4	0 0	+1 0	+1 0	+1 0	+1 0	+1 +1	+2 +1	+2 +1	+2 +1	+2 +1	+2 +2
1123	.875 1.375 TO 5.875	8 8	0 0	0 0	0 0	0 0	0 0	0 0	0 0	0 0	0 0	0 0	0 0
1212	.875 1.375 TO 5.875	4 4	0 0	+1 0	+1 0	+1 0	+1 0	+1 +1	+2 +1	+2 +1	+2 +1	+2 +1	+2 +2
1215	.875 1.375 TO 5.875	4 4	0 0	+1 0	+1 0	+1 0	+1 0	+1 +1	+2 +1	+2 +1	+2 +1	+2 +1	+2 +2
1220	.875 1.375 TO 5.875	4 4	0 0	+1 0	+1 0	+1 0	+1 0	+1 +1	+2 +1	+2 +1	+2 +1	+2 +1	+2 +2
1223	.875 1.375 TO 5.875	8 8	0 0	0 0	0 0	0 0	0 0	0 0	0 0	0 0	0 0	0 0	0 0
1315	.875 1.375 TO 5.875	4 4	0 0	+1 0	+1 0	+1 0	+1 0	+1 +1	+2 +1	+2 +1	+2 +1	+2 +1	+2 +2
1318	.875 1.375 TO 5.875	4 4	0 0	+1 0	+1 0	+1 0	+1 0	+1 +1	+2 +1	+2 +1	+2 +1	+2 +1	+2 +2
1321	.875 1.375 TO 5.875	4 4	0 0	+1 0	+1 0	+1 0	+1 0	+1 +1	+2 +1	+2 +1	+2 +1	+2 +1	+2 +2
1323	.875 1.375 TO 5.875	8 8	0 0	0 0	0 0	0 0	0 0	0 0	0 0	0 0	0 0	0 0	0 0
1326	.875 1.375 TO 5.875	8 8	0 0	0 0	0 0	0 0	0 0	0 0	0 0	0 0	0 0	0 0	0 0
1329	.875 1.375 TO 5.875	8 8	0 0	0 0	0 0	0 0	0 0	0 0	0 0	0 0	0 0	0 0	0 0
1518	.875 1.375 TO 5.875	4 4	0 0	+1 0	+1 0	+1 0	+1 0	+1 +1	+2 +1	+2 +1	+2 +1	+2 +1	+2 +2
1524	.875 1.375 TO 5.875	8 8	0 0	0 0	0 0	0 0	0 0	0 0	0 0	0 0	0 0	0 0	0 0
1529	.875 1.375 TO 5.875	8 8	0 0	0 0	0 0	0 0	0 0	0 0	0 0	0 0	0 0	0 0	0 0
1616	.875 1.375 TO 5.875	4 4	0 0	+1 0	+1 0	+1 0	+1 0	+1 +1	+2 +1	+2 +1	+2 +1	+2 +1	+2 +2
1620	.875 1.375 TO 5.875	4 4	0 0	+1 0	+1 0	+1 0	+1 0	+1 +1	+2 +1	+2 +1	+2 +1	+2 +1	+2 +2
1623	.875 1.375 TO 5.875	8 8	0 0	0 0	0 0	0 0	0 0	0 0	0 0	0 0	0 0	0 0	0 0
1626	.875 1.375 TO 5.875	8 8	0 0	0 0	0 0	0 0	0 0	0 0	0 0	0 0	0 0	0 0	0 0
1629	.875 1.375 TO 5.875	8 8	0 0	0 0	0 0	0 0	0 0	0 0	0 0	0 0	0 0	0 0	0 0
1635	.875 1.375 TO 5.875	12 12	0 0	0 0	0 0	0 0	0 0	0 0	0 0	0 0	0 0	0 0	0 0
1724	.875 1.375 TO 5.875	8 8	0 0	0 0	0 0	0 0	0 0	0 0	0 0	0 0	0 0	0 0	0 0
1729	.875 1.375 TO 5.875	8 8	0 0	0 0	0 0	0 0	0 0	0 0	0 0	0 0	0 0	0 0	0 0
1818	.875 1.375 TO 5.875	4 4	0 0	+1 0	+1 0	+1 0	+1 0	+1 +1	+2 +1	+2 +1	+2 +1	+2 +1	+2 +2
1820	.875 1.375 TO 5.875	4 4	0 0	+1 0	+1 0	+1 0	+1 0	+1 +1	+2 +1	+2 +1	+2 +1	+2 +1	+2 +2
1823	.875 1.375 TO 5.875	8 8	0 0	0 0	0 0	0 0	0 0	0 0	0 0	0 0	0 0	0 0	0 0
1826	.875 1.375 TO 5.875	8 8	0 0	0 0	0 0	0 0	0 0	0 0	0 0	0 0	0 0	0 0	0 0
1829	.875 1.375 TO 5.875	8 8	0 0	0 0	0 0	0 0	0 0	0 0	0 0	0 0	0 0	0 0	0 0
1835	.875 1.375 TO 5.875	12 12	0 0	0 0	0 0	0 0	0 0	0 0	0 0	0 0	0 0	0 0	0 0
1924	.875 1.375 TO 5.875	8 8	0 0	0 0	0 0	0 0	0 0	0 0	0 0	0 0	0 0	0 0	0 0
1929	.875 1.375 TO 5.875	8 8	0 0	0 0	0 0	0 0	0 0	0 0	0 0	0 0	0 0	0 0	0 0
1935	.875 1.375 TO 5.875	12 12	0 0	0 0	0 0	0 0	0 0	0 0	0 0	0 0	0 0	0 0	0 0
2424	.875 1.375 TO 5.875	8 8	0 0	0 0	0 0	0 0	0 0	0 0	0 0	0 0	0 0	0 0	0 0
2429	.875 1.375 TO 5.875	8 8	0 0	0 0	0 0	0 0	0 0	0 0	0 0	0 0	0 0	0 0	0 0
2435	.875 1.375 TO 5.875	12 12	0 0	0 0	0 0	0 0	0 0	0 0	0 0	0 0	0 0	0 0	0 0

NOTES:
1. Blue color configurations require additional assembly screws.
2. Numbers of additional assembly screws suggested are minimum required.
3. No safety factor considered. The moldmaker is entirely responsible for the chosen configuration.

KEY:
- = No additional assembly screws required
- = Add screws as noted (+)
- N/A = Not available/not recommended

Minimum Recommended Additional Assembly SHCS

MOLD BASE SIZE	A PLATE THICKNESS	EXISTING TOTAL NUMBER OF SHCS	MOLDING MACHINE FORCE (TONS) / MOLD OPENING FORCE (LBS.)													
			675 135,000	700 140,000	725 145,000	750 150,000	775 155,000	800 160,000	825 165,000	850 170,000	875 175,000	900 180,000	925 185,000	950 190,000	975 195,000	1000 200,000
88	.875 1.375 TO 5.875	4 4	+4 +2	+4 +2	+4 +2	+4 +2	+4 +4	+4 +4	+4 +4	+4 +4	+4 +4	+4 +4	+4 +4	N/A +4	N/A +4	N/A +4
812	.875 1.375 TO 5.875	4 4	+4 +2	+4 +2	+4 +2	+4 +2	+4 +4	+4 +4	+4 +4	+4 +4	+4 +4	+4 +4	+4 +4	N/A +4	N/A +4	N/A +4
108	.875 1.375 TO 5.875	4 4	+4 +2	+4 +2	+4 +2	+4 +2	+4 +4	+4 +4	+4 +4	+4 +4	+4 +4	+4 +4	+4 +4	N/A +4	N/A +4	N/A +4
1012	.875 1.375 TO 5.875	4 4	+4 +2	+4 +2	+4 +2	+4 +2	+4 +4	+4 +4	+4 +4	+4 +4	+4 +4	+4 +4	+4 +4	N/A +4	N/A +4	N/A +4
1016	.875 1.375 TO 5.875	4 4	+4 +2	+4 +2	+4 +2	+4 +2	+4 +4	+4 +4	+4 +4	+4 +4	+4 +4	+4 +4	+4 +4	N/A +4	N/A +4	N/A +4
1020	.875 1.375 TO 5.875	4 4	+4 +2	+4 +2	+4 +2	+4 +2	+4 +4	+4 +4	+4 +4	+4 +4	+4 +4	+4 +4	+4 +4	N/A +4	N/A +4	N/A +4
1112	.875 1.375 TO 5.875	4 4	+4 +2	+4 +2	+4 +2	+4 +2	+4 +4	+4 +4	+4 +4	+4 +4	+4 +4	+4 +4	+4 +4	N/A +4	N/A +4	N/A +4
1114	.875 1.375 TO 5.875	4 4	+4 +2	+4 +2	+4 +2	+4 +2	+4 +4	+4 +4	+4 +4	+4 +4	+4 +4	+4 +4	+4 +4	N/A +4	N/A +4	N/A +4
1118	.875 1.375 TO 5.875	4 4	+4 +2	+4 +2	+4 +2	+4 +2	+4 +4	+4 +4	+4 +4	+4 +4	+4 +4	+4 +4	+4 +4	N/A +4	N/A +4	N/A +4
1123	.875 1.375 TO 5.875	8 8	0 0	0 0	0 0	0 0	0 0	0 0	0 0	0 0	0 0	0 0	0 0	+2 0	+2 0	+2 0
1212	.875 1.375 TO 5.875	4 4	+4 +2	+4 +2	+4 +2	+4 +2	+4 +4	+4 +4	+4 +4	+4 +4	+4 +4	+4 +4	+4 +4	+6 +4	+6 +4	+6 +4
1215	.875 1.375 TO 5.875	4 4	+4 +2	+4 +2	+4 +2	+4 +2	+4 +4	+4 +4	+4 +4	+4 +4	+4 +4	+4 +4	+4 +4	+6 +4	+6 +4	+6 +4
1220	.875 1.375 TO 5.875	4 4	+4 +2	+4 +2	+4 +2	+4 +2	+4 +4	+4 +4	+4 +4	+4 +4	+4 +4	+4 +4	+4 +4	+6 +4	+6 +4	+6 +4
1223	.875 1.375 TO 5.875	8 8	0 0	0 0	0 0	0 0	0 0	0 0	0 0	0 0	0 0	0 0	0 0	+2 0	+2 0	+2 0
1315	.875 1.375 TO 5.875	4 4	+4 +2	+4 +2	+4 +2	+4 +2	+4 +4	+4 +4	+4 +4	+4 +4	+4 +4	+4 +4	+4 +4	+6 +4	+6 +4	+6 +4
1318	.875 1.375 TO 5.875	4 4	+4 +2	+4 +2	+4 +2	+4 +2	+4 +4	+4 +4	+4 +4	+4 +4	+4 +4	+4 +4	+4 +4	+6 +4	+6 +4	+6 +4
1321	.875 1.375 TO 5.875	4 4	+4 +2	+4 +2	+4 +2	+4 +2	+4 +4	+4 +4	+4 +4	+4 +4	+4 +4	+4 +4	+4 +4	+6 +4	+6 +4	+6 +4
1323	.875 1.375 TO 5.875	8 8	0 0	0 0	0 0	0 0	0 0	0 0	0 0	0 0	0 0	0 0	0 0	+2 0	+2 0	+2 0
1326	.875 1.375 TO 5.875	8 8	0 0	0 0	0 0	0 0	0 0	0 0	0 0	0 0	0 0	0 0	0 0	+2 0	+2 0	+2 0
1329	.875 1.375 TO 5.875	8 8	0 0	0 0	0 0	0 0	0 0	0 0	0 0	0 0	0 0	0 0	0 0	+2 0	+2 0	+2 0
1518	.875 1.375 TO 5.875	4 4	+4 +2	+4 +2	+4 +2	+4 +2	+4 +4	+4 +4	+4 +4	+4 +4	+4 +4	+4 +4	+4 +4	+6 +4	+6 +4	+6 +4
1524	.875 1.375 TO 5.875	8 8	0 0	0 0	0 0	0 0	0 0	0 0	0 0	0 0	0 0	0 0	0 0	+2 0	+2 0	+2 0
1529	.875 1.375 TO 5.875	8 8	0 0	0 0	0 0	0 0	0 0	0 0	0 0	0 0	0 0	0 0	0 0	+2 0	+2 0	+2 0
1616	.875 1.375 TO 5.875	4 4	+4 +2	+4 +2	+4 +2	+4 +2	+4 +4	+4 +4	+4 +4	+4 +4	+4 +4	+4 +4	+4 +4	+6 +4	+6 +4	+6 +4
1620	.875 1.375 TO 5.875	4 4	+4 +2	+4 +2	+4 +2	+4 +2	+4 +4	+4 +4	+4 +4	+4 +4	+4 +4	+4 +4	+4 +4	+6 +4	+6 +4	+6 +4
1623	.875 1.375 TO 5.875	8 8	0 0	0 0	0 0	0 0	0 0	0 0	0 0	0 0	0 0	0 0	0 0	+2 0	+2 0	+2 0
1626	.875 1.375 TO 5.875	8 8	0 0	0 0	0 0	0 0	0 0	0 0	0 0	0 0	0 0	0 0	0 0	+2 0	+2 0	+2 0
1629	.875 1.375 TO 5.875	8 8	0 0	0 0	0 0	0 0	0 0	0 0	0 0	0 0	0 0	0 0	0 0	+2 0	+2 0	+2 0
1635	.875 1.375 TO 5.875	12 12	0 0	0 0	0 0	0 0	0 0	0 0	0 0	0 0	0 0	0 0	0 0	0 0	0 0	0 0
1724	.875 1.375 TO 5.875	8 8	0 0	0 0	0 0	0 0	0 0	0 0	0 0	0 0	0 0	0 0	0 0	+2 0	+2 0	+2 0
1729	.875 1.375 TO 5.875	8 8	0 0	0 0	0 0	0 0	0 0	0 0	0 0	0 0	0 0	0 0	0 0	+2 0	+2 0	+2 0
1818	.875 1.375 TO 5.875	4 4	+4 +2	+4 +2	+4 +2	+4 +2	+4 +4	+4 +4	+4 +4	+4 +4	+4 +4	+4 +4	+4 +4	+6 +4	+6 +4	+6 +4
1820	.875 1.375 TO 5.875	4 4	+4 +2	+4 +2	+4 +2	+4 +2	+4 +4	+4 +4	+4 +4	+4 +4	+4 +4	+4 +4	+4 +4	+6 +4	+6 +4	+6 +4
1823	.875 1.375 TO 5.875	8 8	0 0	0 0	0 0	0 0	0 0	0 0	0 0	0 0	0 0	0 0	0 0	+2 0	+2 0	+2 0
1826	.875 1.375 TO 5.875	8 8	0 0	0 0	0 0	0 0	0 0	0 0	0 0	0 0	0 0	0 0	0 0	+2 0	+2 0	+2 0
1829	.875 1.375 TO 5.875	8 8	0 0	0 0	0 0	0 0	0 0	0 0	0 0	0 0	0 0	0 0	0 0	+2 0	+2 0	+2 0
1835	.875 1.375 TO 5.875	12 12	0 0	0 0	0 0	0 0	0 0	0 0	0 0	0 0	0 0	0 0	0 0	0 0	0 0	0 0
1924	.875 1.375 TO 5.875	8 8	0 0	0 0	0 0	0 0	0 0	0 0	0 0	0 0	0 0	0 0	0 0	+2 0	+2 0	+2 0
1929	.875 1.375 TO 5.875	8 8	0 0	0 0	0 0	0 0	0 0	0 0	0 0	0 0	0 0	0 0	0 0	+2 0	+2 0	+2 0
1935	.875 1.375 TO 5.875	12 12	0 0	0 0	0 0	0 0	0 0	0 0	0 0	0 0	0 0	0 0	0 0	0 0	0 0	0 0
2424	.875 1.375 TO 5.875	8 8	0 0	0 0	0 0	0 0	0 0	0 0	0 0	0 0	0 0	0 0	0 0	+2 0	+2 0	+2 0
2429	.875 1.375 TO 5.875	8 8	0 0	0 0	0 0	0 0	0 0	0 0	0 0	0 0	0 0	0 0	0 0	+2 0	+2 0	+2 0
2435	.875 1.375 TO 5.875	12 12	0 0	0 0	0 0	0 0	0 0	0 0	0 0	0 0	0 0	0 0	0 0	0 0	0 0	0 0

NOTES:
1. Blue color configurations require additional assembly screws.
2. Numbers of additional assembly screws suggested are minimum required.
3. No safety factor considered. The moldmaker is entirely responsible for the chosen configuration.

KEY:
- ☐ = No additional assembly screws required
- ▭ = Add screws as noted (+)
- N/A = Not available/not recommended

American Mold Base Features and Delivery Time

Special Mold Bases Shipping in FIVE Working Days

Includes all DME Standard Mold Bases #1, #2 and #3 steel (7/8" to 5 7/8" thick) and #7 steel (7/8" to 2 7/8" thick); and all "no charge" items, plus:

- Machine for and install guided ejection – 2 or 4 places
- Machine for and install support pillars
- Machine for and install additional stop pins
- Machine press knock-out in bottom clamp plate (tap in ejector bar, if required)
- Machine pry bar slots
- Machine leader pin vent slots in rails
- Machine for spring holes
- Drill and tap lifting holes
- Drill and tap mold strap holes (location ±1/32")
- Machine for and install extra assembly screws in top and/or bottom
- Machine for and install extra assembly screws in ejector assembly
- Machine for and install added return pins
- Rough mill/bore cavity and core pocket; blind or through (NOTE: 1/2" minimum radius required)

Special Mold Bases Shipping in SEVEN Working Days

Includes all features specified in FIVE working days, plus:

- Machine for DME three-piece extension bushings
- Drill and tap horizontal water lines
- Drill water pipe clearance holes
- Drill vertical water lines (excluding o-ring machining)
- Machine for DME angle pin inserts
- Finish mill/bore cavity and core pocket; blind or through (NOTE: 1/2" minimum radius required)

Special Mold Bases Shipping in ELEVEN Working Days

Includes all features specified in SEVEN working days, plus:

- Machine for DME parting line interlocks
- Provide special thickness plates (maximum plate thickness of 5 7/8" in DME #1, #2 and #3 steels, and 2 7/8" in DME #7 steel)
- Provide special plate lengths and widths within DME standard size offerings
- Angle pin machining and clearance (maximum 4)
- Ejector pin machining – maximum of 25 pins (3/16" minimum diameter ejector pin; 2 7/8" maximum plate thickness)
- Side interlock machining

Self-Lubricating Bushings

5-DAY SHIPPING

DME Self-Lubricating Bushings save time and money in the design, construction and operation of injection molds. Their built-in lubrication capability also makes them a good choice for fast cycling, high-production molds.

FOR QUOTING OR ORDERING, SPECIFY:

Self-Lubricating Bushings

Item Number:_____

Quantity: _____

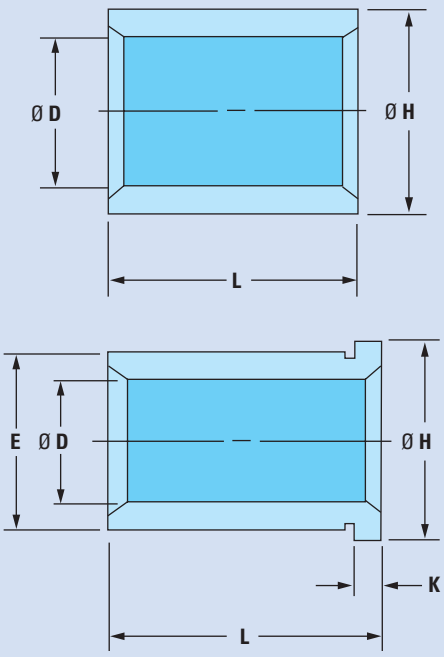

General Dimensions

NOMINAL I.D.	Ø E +.0005 -.0000	H +.000 -.030	K
3/4	1.1255	1.302	3/16
7/8	1.2505	1.427	
1"	1.3755	1.552	
1 1/4	1.6255	1.802	
1 1/2	2.0005	2.177	
2"	2.5005	2.677	
2 1/2	3.2505	3.427	
3"	3.7505	3.990	1/2

Self-Lubricating Straight Bushings

NOMINAL I.D.	Ø D +.0005 -.0000	L +.00 -.06 LENGTH	H +.0005 -.0000	ITEM NUMBER
3/4	.7505	7/8	1.1255	GBS-06-07
		1 3/8	1.1255	GBS-06-13
7/8	.8755	1 3/8	1.2505	GBS-07-13
1"	1.0005	1 3/8	1.3755	GBS-08-13
1 1/4	1.2505	1 3/8	1.6255	GBS-10-13
		1 7/8	1.6255	GBS-10-17
1 1/2	1.5005	1 3/8	2.0005	GBS-12-13
		1 7/8	2.0005	GBS-12-17
2"	2.0005	3 7/8	2.5005	GBS-16-37
2 1/2	2.5005	4 7/8	3.2505	GBS-20-47
3"	3.0005	4 7/8	3.7505	GBS-24-47

Pry Slots

Mold base features Pry Slots, installed in any plate specified, on the parting and/or non-parting line side. This provides handling ease when opening and/or disassembling a mold.

5 5-DAY SHIPPING

Pry Slot Options

BASE SIZE	SLOT LENGTH Z
88-1123	.56 x 45°
1212-1315	.88 x 45°
1318-2435	1.00 x 45°

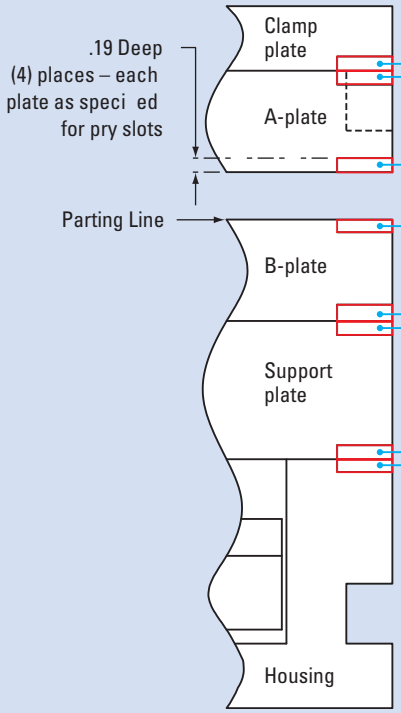

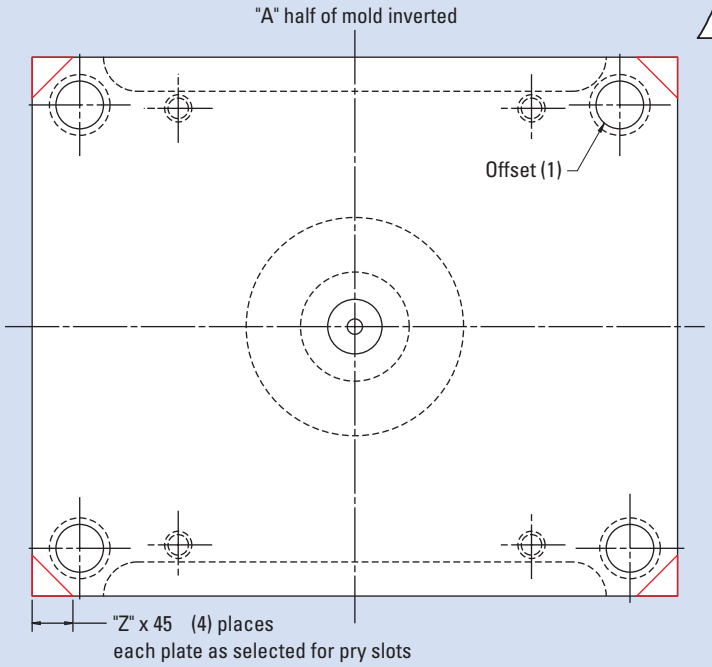

FOR QUOTING OR ORDERING, SPECIFY:

Pry Slot options:

- q Clamp Plate – parting line
- q A Plate – non-parting line
- q A Plate – parting line
- q B Plate – parting line
- q B Plate – non-parting line
- q Support Plate – parting line
- q Support Plate – non-parting line
- q Housing – parting line

Guided Ejection Systems

5-DAY SHIPPING

Guided Ejection Systems hold the ejector assembly in alignment and support the weight of the ejector assembly throughout the molding cycle – greatly reducing wear on ejection components and preventing cocking of the ejector assembly.

FOR QUOTING OR ORDERING, SPECIFY:

Guided Ejection System Type

- ❑ System 1
- ❑ System 2

Quantity (2 or 4): _____

Guided Ejection Bushing Type

- ❑ Bronze-Plated Steel Bushings
- ❑ Self-Lubricating Bushings

Guided Ejection

Position:

❑ **STD** ❑ **Specify**

Recommended position from table provided standard (see opposite page). If a different position is required, specify below.

GEx_____

GEy_____

Diameter:

❑ **STD** ❑ **Specify**

Recommended diameter from table provided standard. If a different diameter is required, it will require a positioning change; specify below.

Available diameters:

- ❑ 0.750
- ❑ 0.875
- ❑ 1.000
- ❑ 1.250

SYSTEM 1

When pins are installed in the support plate, the ejector housing can be removed from the mold without removing ejector plates. This permits easy access to service the ejector system.

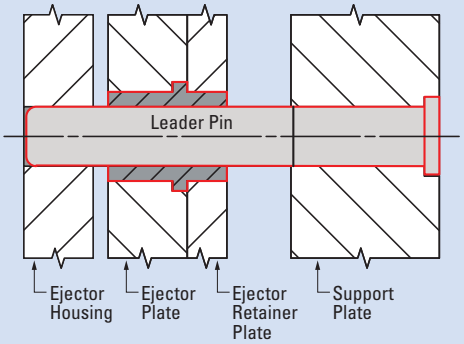

SYSTEM 2

Pins installed in the ejector housing permit fast installation. When the ejector housing is removed from the mold base, the complete ejector assembly is removed.

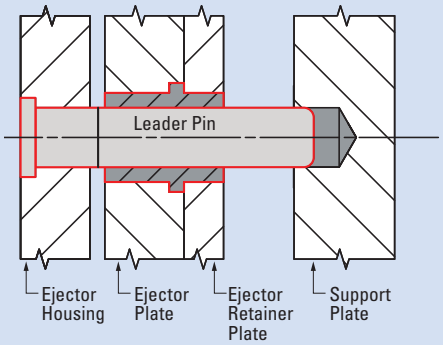

Guided Ejection Systems

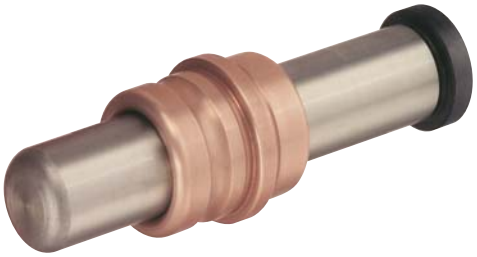

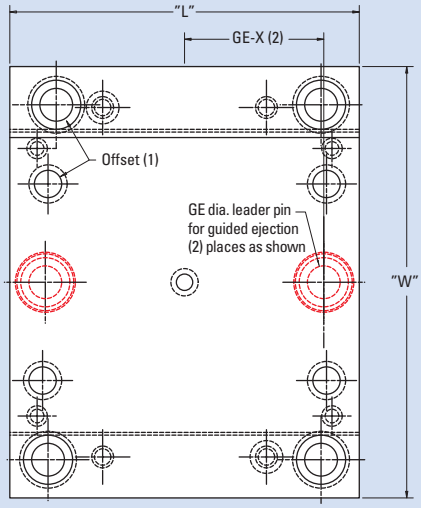

"B" HALF OF MOLD FOR 88, 812 & 108 MOLD BASE SIZE ONLY

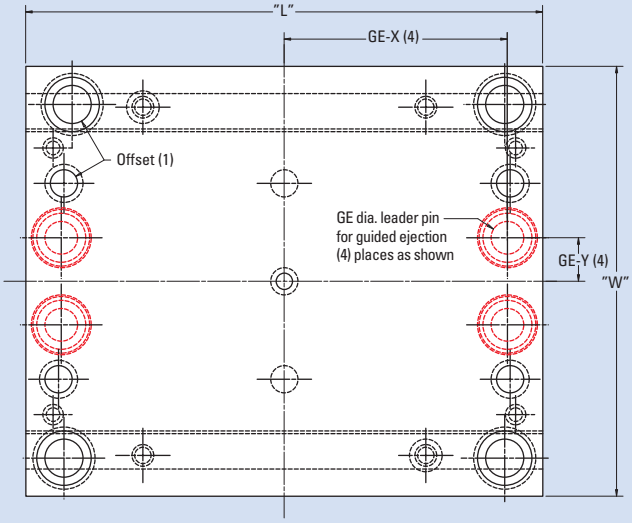

"B" HALF OF MOLD FOR 1012 – 2435 BASES

Guided Ejection Positions

PIN DIAMETER (RECOMMENDED)	BASE SIZE	GEx	GEy
0.750	88	3.000	Center
	812	5.000	Center
	108	3.062	Center
	1012	5.000	1.000
	1016	7.062	1.000
	1020	9.062	1.000
	1112	5.062	1.625
	1114	6.062	1.625
	1118	8.062	1.625
	1123	10.812	1.625
0.875	212	5.000	1.750
	1215	6.500	1.750
	1220	9.000	1.750
	1223	10.750	1.750
	1315	6.500	2.375
	1318	8.000	2.375
	1321	9.375	2.375
	1323	10.750	2.375
	1326	12.000	2.375
	1329	13.750	2.375

PIN DIAMETER (RECOMMENDED)	BASE SIZE	GEx	GEy
1.000	1518	7.875	2.375
	1524	10.812	2.375
	1529	13.688	2.375
	1616	6.938	2.875
	1620	8.938	2.875
	1623	10.688	2.875
	1626	11.938	2.875
	1629	13.688	2.875
	1635	16.688	2.875
	1724	10.812	3.125
	1729	13.688	3.125
	1818	7.938	3.875
	1820	8.938	3.875
	1823	10.688	3.875
	1826	11.938	3.875
	1829	13.688	3.875
	1835	16.688	3.875
	1924	10.812	4.625
	1929	13.688	4.625
	1935	16.688	4.625
1.250	2424	10.688	6.125
	2429	13.562	6.125
	2435	16.562	6.125

Lifting Holes

Lifting Holes can be used to install hoist rings for ease of handling. Mold base can be configured only with Lifting Holes which are appropriate for the specific mold base size. Refer to the DME Mold Components catalog for a comprehensive selection of hoist rings.

FOR QUOTING OR ORDERING, SPECIFY:

Lifting Holes

Lifting holes can be selected up to three per plate edge. They are available in top clamp plate, A-plate, B-plate, support plate, and bottom clamp plate.

Note that for safety reasons, only the recommended hole diameters (or larger) shown in the table are offered.

Diameter _____

Quantity in each plate _____

Plates with lift holes _____

_____

_____

_____

_____

(Prints required if not on center)

Lifting Hole Diameters

BASE SIZE	PLATE THICKNESS	
	0.875	1.375
88-1118	1/2-13 UNC	1/2-13 UNC
1123-1524	5/8-11 UNC	5/8-11 UNC
1529-1829	5/8-11 UNC	3/4-10 UNC
1835-2429	5/8-11 UNC	1"-8 UNC
2435	N/A	1"-8 UNC

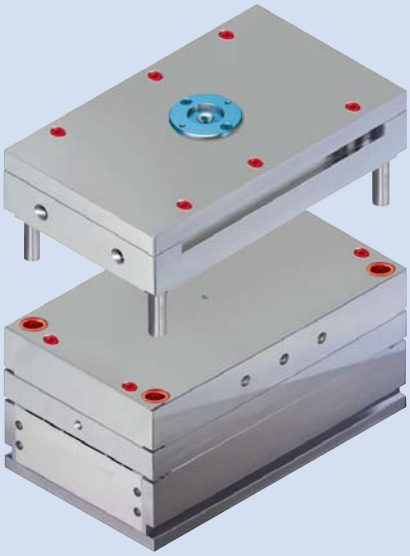

Lifting Holes

THREAD SIZE	S	T MAX.
1/2-13	1.00	1.38
5/8-11	1.25	1.75
3/4-10	1.50	2.00
1"-8	2.00	2.62

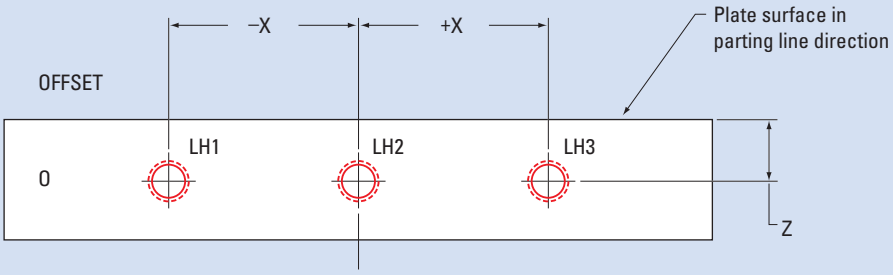

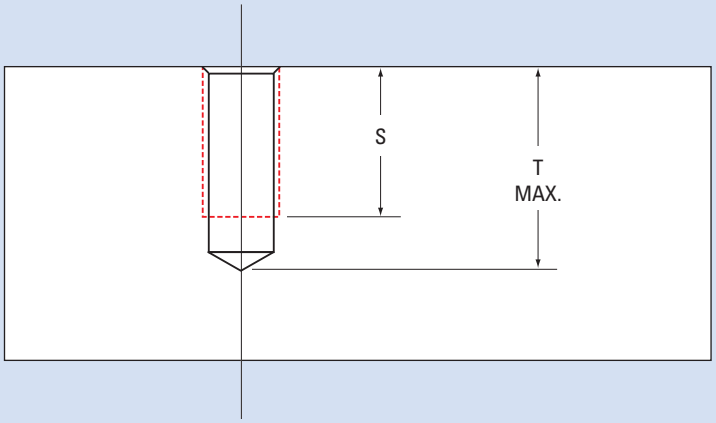

Pockets

Per customer specifications, any type of cavity and core pockets will be finished.
See DME Mold Components catalog for spring free lengths and hole dimensions.

Quick delivery on any type of cavity or core pockets

FOR QUOTING OR ORDERING, SPECIFY:

Rectangular Pockets

- ❑ Rough rectangular pockets: 5 days
- ❑ Finished rectangular pockets: 7 days

Length _____

Width _____

- ❑ Through
- ❑ Blind _____ (specify depth)

Corner Radius _____
(.50 min/1.00 max)

NOTE: Rough pocket tolerance -.062 per side; finished pocket tolerance ±.001

Support Pillars

5-DAY SHIPPING

Support Pillars greatly increase the capacity of the mold to support the projected area of the cavities, runner and sprue. By providing additional support, they prevent deflection of the mold. Support Pillars are universally adaptable for cap screw, threaded locating pin, or socket set screw application.

FOR QUOTING OR ORDERING, SPECIFY:

Support Pillars

Quantity: _____

Diameter: _____

Style:

- ❑ Cap screw
- ❑ Threaded locating pin
- ❑ Socket set screw

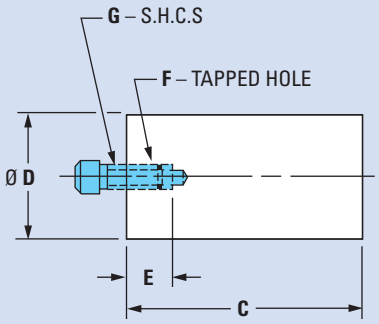

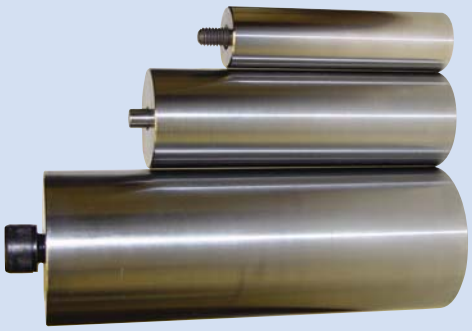

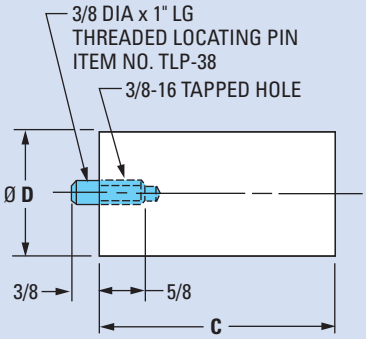

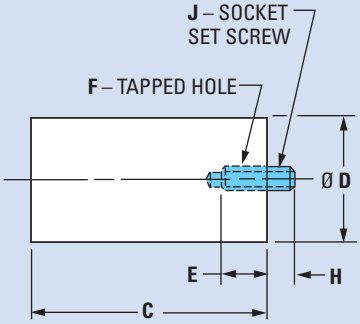

Cap Screw Application

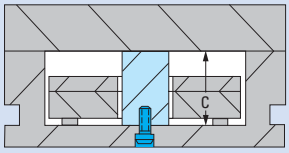

Threaded Locating Pin Application

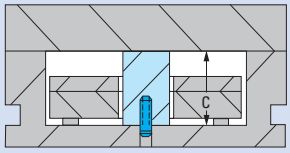

Socket Set Screw Application

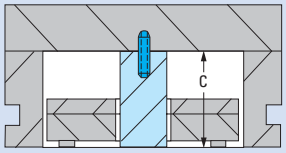

No support pillars

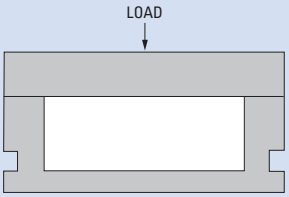

One row of support pillars increases the permissible cavity area 4 times

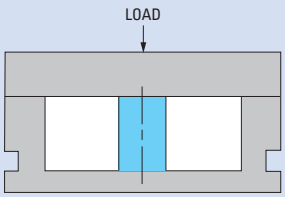

Two rows of support pillars increase the permissible cavity area 9 times

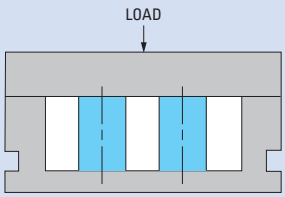

Ø D	E	F	H (APPROX)	J SOCKET SET SCREW
1", 1 1/4, 1 1/2, 2"	5/8	3/8 – 16	1/2	ITEM NO. SSS-38114
3", 4"	1 1/4	5/8 – 11	3/8	ITEM NO. SSS-582

NOTE: Order SHCS separately.

Support Pillars

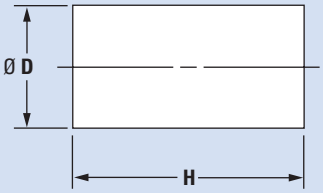

Support Pillars

Ø D +.000 -.060	H +.001 -.000 HEIGHT	ITEM NUMBER
1"	2.500	6090
	3.000	6091
	3.500	6092
	4.000	6093
	4.500	6094
1 1/4	2.500	6130
	3.000	6131
	3.500	6132
	4.000	6133
	4.500	6134
	5.000	6135
	6.000	6136
1 1/2	2.500	6140
	3.000	6141
	3.500	6142
	4.000	6143
	4.500	6144
	5.000	6145
	6.000	6146
2"	2.500	6150
	3.000	6151
	3.500	6152
	4.000	6153
	4.500	6154
	5.000	6155
	6.000	6156
3"	5.000	6235
	6.000	6236
	8.000	6238
4"	5.000	6245
	6.000	6246
	8.000	6248

Support pillars are universally adaptable for cap screw, threaded locating pin, or socket set screw applications.

Order pillars from chart at left and required "fasteners" as listed below.

Cap Screw (S.H.C.S.) Applications

3/8-16 or 5/8-11 socket head cap screws can be ordered in length required, see DME Mold Components Catalog.

Threaded Locating Pin Applications

Locating pins unavailable for 3" and 4" diameter pillars.

Ø D PILLAR	ITEM NUMBER
1" TO 2"	TLP-38

Socket Set Screw Applications

Order pins and screws in package lots only.

Ø D PILLAR	ITEM NUMBER	QTY PER PACKAGE
1" TO 2"	SSS-38114	10
3" AND 4"	SSS-582	5

Leader Pin Vents, Spring Pockets & Mold Strap Holes

5 5-DAY SHIPPING

FOR QUOTING OR ORDERING, SPECIFY:

❑ **Leader Pin Vents**
Leader Pin Vents (0.50 wide x 0.12 deep) can be machined in the housing under the bushing location.

Leader Pin Vents, which allow trapped air to escape from the mold, are designed into all 15-inch-and-wider series molds. When desired, they can be specified on smaller molds.

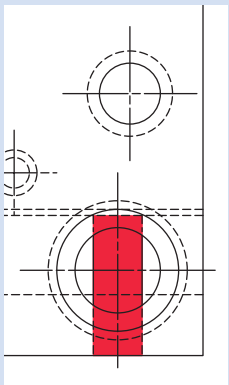

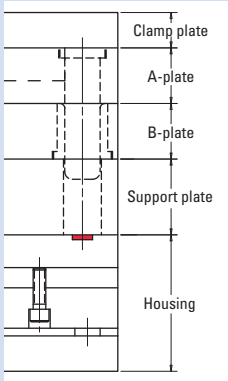

❑ **Spring Pockets**

Quantity: _____

Plate(s) with pockets: _____

Per customer specifications, any type of cavity and core pockets can be finished. See DME Mold Components catalog for spring free lengths and hole dimensions.

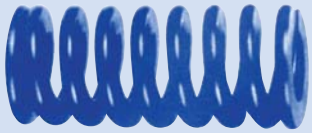

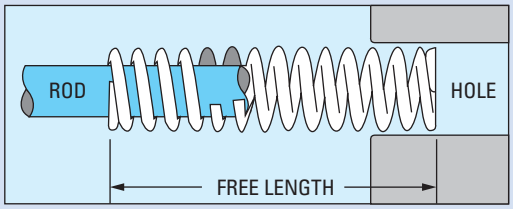

❑ **Mold Strap Holes**
Provide desired positions and quantity (minimum 2).

Quantity: _____

Positions: _____

Machined holes will be for mounting mold straps. Please provide desired positions and quantity (minimum 2).

Waterlines

DME will provide waterlines and plugs per customer specifications.

7-DAY SHIPPING

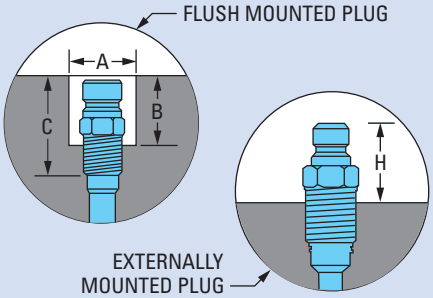

Jiffy-Tite® Plugs (JP)

Male Plug Mounting Information

ITEM NUMBER	NPT	HEX SIZE	A	B	C	H
JP-250	1/16	7/16	11/16	11/16	1"	5/8
JP-251	1/8	7/16	11/16	11/16	1"	5/8
JP-252-(SV)	1/4	9/16	27/32	15/16	1 3/16	7/8
JP-253-(SV)	3/8	11/16	1.000	15/16	1 1/4	29/32
JP-351	1/8	9/16	1.000	15/16	1 1/4	7/8
JP-352-(SV)	1/4	9/16	1.000	1 3/32	1 7/16	1 1/32
JP-353-(SV)	3/8	11/16	1.000	1 1/8	1 7/16	1 1/16
JP-354-(SV)	1/2	7/8	1 3/16	1 1/4	1 9/16	1 3/16
JP-553	3/8	7/8	1 1/4	1 3/16	1 5/8	1 1/8
JP-554	1/2	7/8	1 1/4	1 1/2	1 13/16	1 7/16
JP-556	3/4	1 1/8	1 1/2	1 9/16	1 7/8	1 1/2

FOR QUOTING OR ORDERING, SPECIFY:

Waterlines

Diameter: _____

Specify plates with waterlines:

_____

_____

_____

_____

Total length (in inches) of waterlines in each plate:

_____

_____

_____

_____

3-Plate Extension Bushings

7-DAY SHIPPING

Three-Plate Extension Bushings can save material, reduce cycle time and help prevent runner hang-ups in 3-plate molds.

FOR QUOTING OR ORDERING, SPECIFY:

Extension Bushings

Item Number: _____

Quantity: _____

Runner Stripper Plate Bushing TEB-0001

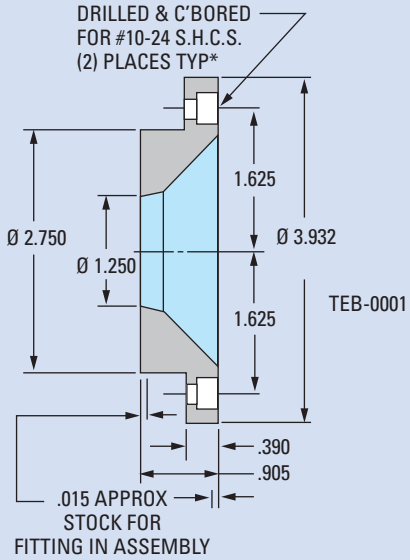

NOTES:

1. Stripper plate bushing TEB-0001 is used with all small and large extension nozzle bushings.
2. Appropriate S.H.C.S. are included with all bushings (TEB-0001 thru TEB-0009).
3. Select small or large bushing based on "A" clamping plate (A.C.P.) thickness, X-1 stripper plate thickness, machine nozzle spherical radius and machine nozzle clearance requirements.

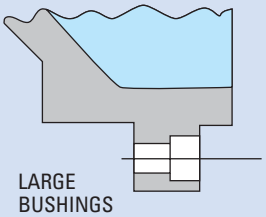

LARGE BUSHINGS MOUNTING HOLE DETAIL

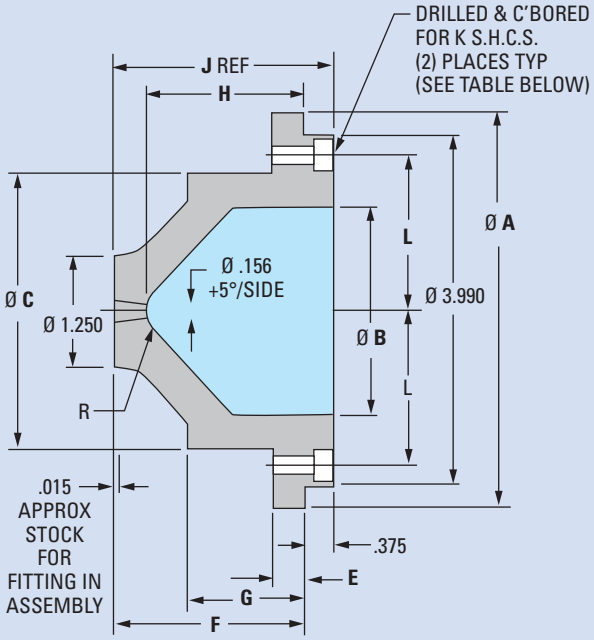

ITEM NUMBER	R SPH. RAD	Ø A	Ø B	Ø C	E	F	G	H	J	K	L
TEB-0002	1/2	4.490	2.375	3.120	.375	2.265	1.377	1.875	2.640	#10-24 x 7/8 LONG (2) INCLUDED	1.781
TEB-0003	3/4							1.812			
TEB-0004	1/2					2.765	1.877	2.375	3.140		
TEB-0005	3/4							2.312			
TEB-0006	1/2	5.490	3.250	3.932	.750	2.765	1.877	2.375	3.140	5/16-18 x 7/8 LONG (2) INCLUDED	2.312
TEB-0007	3/4							2.312			
TEB-0008	1/2					3.265	2.377	2.875	3.640		
TEB-0009	3/4							2.812			

Interlocks

DME Interlocks are precision toleranced and precision manufactured to provide off-the-shelf interchangeability and accurate alignment of mold halves.

11 11-DAY SHIPPING

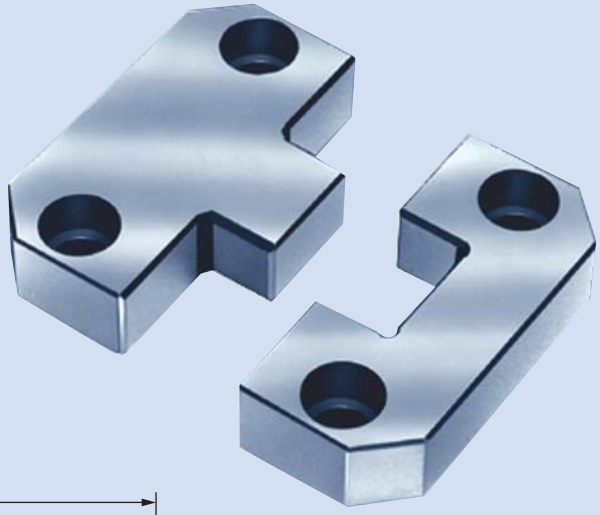

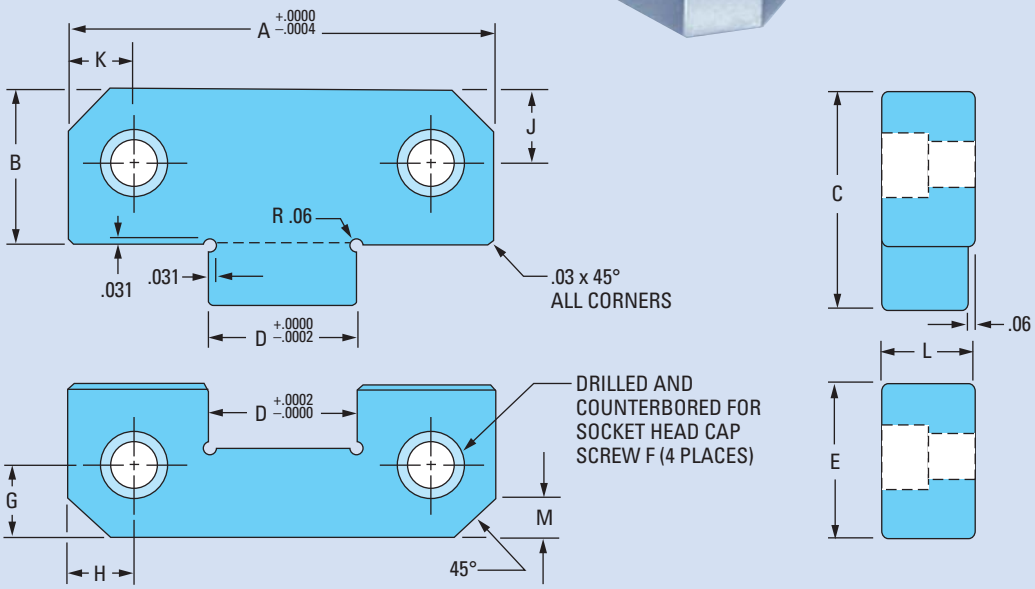

ITEM NUMBER	A NOMINAL	B	C	D NOMINAL	E	F*	G	H	J	K	L	M
PLM-0001	1.5000	.870	1.18	.5000	.870	1/4-20 X 3/4	.281	.281	.437	.281	.620	.19
PLF-0001												
PLM-0002	2.0000	.870	1.18	.6800	.870	1/4-20 X 3/4	.375	.375	.437	.375	.620	.19
PLF-0002												
PLM-0003	3.0000	1.360	1.910	1.0000	1.370	3/8-16 X 1	.688	.375	.688	.375	.745	.19
PLF-0003												
PLM-0004	4.0000	1.870	2.640	1.3750	1.870	3/8-16 X 1	.875	.625	.875	.625	.745	.50
PLF-0004												
PLM-0005	5.0000	1.870	2.640	1.7500	1.870	1/2-13 X 1 1/4	.875	.750	.875	.750	1.120	.50
PLF-0005												

*(2) F size SHCS included with each interlock.

FOR QUOTING OR ORDERING, SPECIFY:

Interlocks

Quantity: _____

Item Number: _____

NOTE: See DME Mold Components catalog for additional interlock options.

Insulator Sheets

DME High Temperature Insulator Sheets are used on molds and dies between the top clamping plate and the stationary platen, and between the bottom of the ejector housing and the movable platen.

- Asbestos-free material
- High compression strength
- Machinable with high-speed cutting tools

ENERGY SAVINGS
1/4 THICK = 27,508 BTU/HR
1/2 THICK = 31,004 BTU/HR

General Data

COMPRESSIVE STRENGTH	(ASTM D-229)	49,400 PSI AT 75°F 27,200 PSI AT 300°F 18,000 PSI AT 400°F 17,100 PSI AT 500°F 15,000 PSI AT 550°F
MODULUS OF ELASTICITY IN COMPRESSION	(ASTM D-229	1.8 x 10° PSI AT 75°F 2.9 x 10° PSI AT 425°F
WATER ABSORPTION	(ASTM D-229)	0.2%
THERMAL CONDUCTIVITY (K FACTOR), (BTU/HR/FT²/IN/°F)	(ASTM C-177)	1.9 AT 75°F 2.1 AT 425°F
FLAME RESISTANCE	(UL SUBJECT 94)	94V-0
EXPANSION ACROSS THICKNESS EXPANSION ACROSS SURFACE		6.43×10^{-5} IN/IN/°F 1.24×10^{-5} IN/IN/°F
MAXIMUM RECOMMENDED SERVICE TEMPERATURE		550°F

High Temperature Insulator Sheets

THICKNESS	LENGTH	WIDTH	ITEM NUMBER	NET WEIGHT
1/4	36"	18"	HTIS-1836-2	12
		24"	HTIS-2436-2	16
		36"	HTIS-3636-2	24
1/4	96"	48"	HTIS-4896-2	105
1/2	36"	18"	HTIS-1836-4	24
		24"	HTIS-2436-4	32
		36"	HTIS-3636-4	48

NOTE: Special sizes available on special order: Max. length = 96", Max thickness = 1", Max. width = 48", Min. thickness = 1/8
Installation: Use 1/4-20 flat head screws. Drill and tap base to suit.

DME X-, AX- and T-Series Mold Bases

A WIDE SELECTION OF DME STANDARD STRIPPER PLATE, AX- AND T-SERIES MOLD BASES AVAILABLE IN DOZENS OF STANDARD SIZES

Table of Contents

Stripper Plate Series Mold Bases 174
AX- and T-Series Mold Bases 175
7-7/8 and 9-7/8 Stripper Plate Mold Bases 176
10-7/8 Stripper Plate Mold Bases 177
11-7/8 Stripper Plate Mold Bases 178
13-3/8 Stripper Plate Mold Bases 179
14-7/8 Stripper Plate Mold Bases 180
15-7/8 and 16-1/2 Stripper Plate Mold Bases 181
17-7/8 Stripper Plate Mold Bases 182
19-1/2 and 23-3/4 Stripper Plate Mold Bases 183
Multiple Stripper Plate Mold Bases 184
AX-Series Mold Bases 185
7-7/8 T-Series 3-Plate Mold Base 186
9-7/8 T-Series Mold Bases 187
10-7/8 T-Series Mold Bases 188
11-7/8 T-Series Mold Bases 189
13-3/8 T-Series Mold Bases 190
14-7/8 T-Series Mold Bases 191
15-7/8 T-Series Mold Bases 192
16-1/2 T-Series Mold Bases 193
17-7/8 T-Series Mold Bases 194
19-1/2 T-Series Mold Bases 195
23-3/4 T-Series Mold Bases 196
3-Plate Extension Bushing 197
Ball Bushings for Floating Plates 198

Stripper Plate Series Mold Base Features

DME Standard Stripper ("X" Series) Mold Bases are available with either the 5- or 6-plate construction. The location of the return pins, leader pins, screws and dowels are identical to the Standard "A" Series Mold Bases. Specifications are listed for every DME Standard size from 7.875 × 7.875 to 23.75 × 35.5.

5 PLATE SERIES

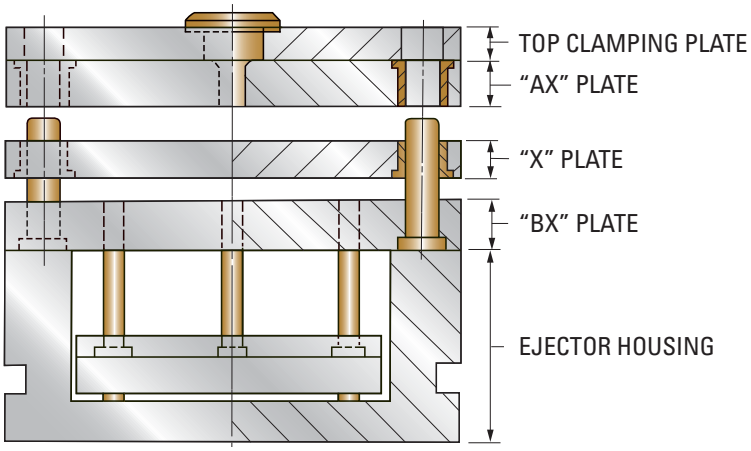

6 PLATE SERIES

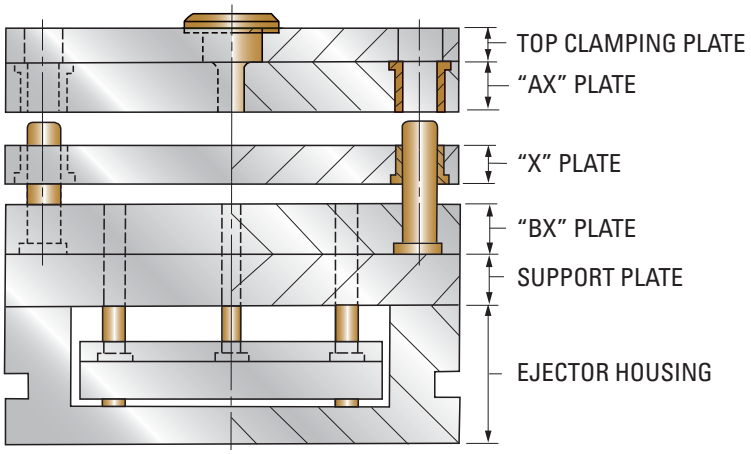

AX- and T-Series Mold Base Features

"AX" Series Mold Bases

A DME Standard "AX" Series Mold Base is basically an "A" Series type mold base with a floating plate ("X-1" plate) added between the cavity plates. This type assembly is used when it is desirable to have the floating plate remain with the upper half of the assembly.

"AX" SERIES

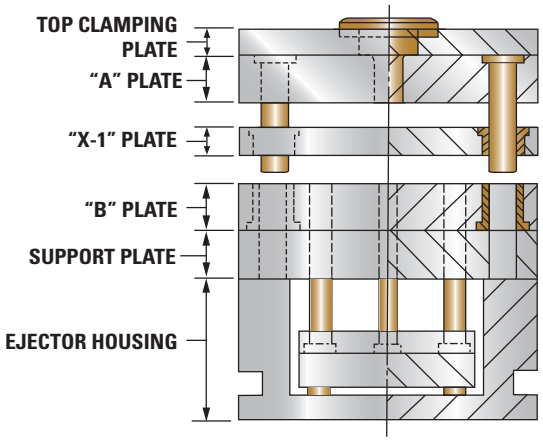

"T" Series Mold Bases

DME Standard "T" Series Mold Bases are available in 42 standard sizes, from 7.875 × 7.875 to 23.75 × 35.5. They are used for top runner molds that require two floating plates ("X-1" – runner stripper plate, "X-2" – cavity plate) to remain with the upper or stationary half of the assembly.

"T" SERIES

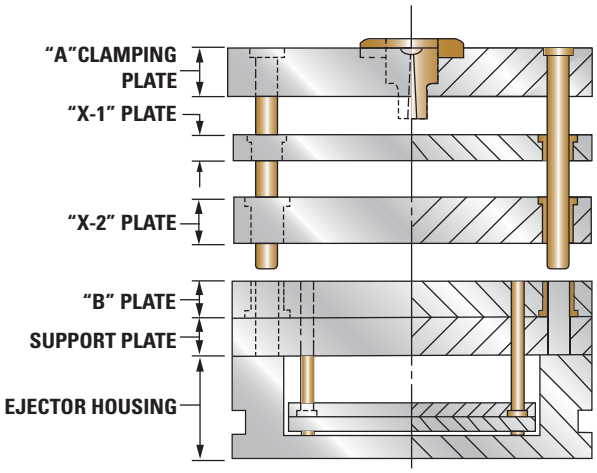

7⅞" and 9⅞" Stripper Plate Mold Bases

NO. 1 & NO. 2 STEEL ASSEMBLIES

All plates above ejector housing are No. 1 or No. 2 Steel, respectively.

NO. 3 STEEL ASSEMBLIES

"AX", "X", and "BX" plates are No. 3 Steel. Top clamping and support plates are No. 2 Steel.

NO. 7 STEEL ASSEMBLIES

Any or all plates available as requested.

W	L	TCP	AX	C	5 PLATE		6 PLATE	
					ITEM NUMBER	NET WT.	ITEM NUMBER	NET WT.
7.875	7.875	0.875	0.875	2.5	88X-5-7	111	88X-6-7	136
			1.375	2.5	88X-5-13	120	88X-6-13	145
			1.875	2.5	88X-5-17	129	88X-6-17	154
			2.375	2.5	88X-5-23	138	88X-6-23	163
	11.875	0.875	0.875	2.5	812X-5-7	174	812X-6-7	211
			1.375	3	812X-5-13	187	812X-6-13	224
			1.875	3.5	812X-5-17	200	812X-6-17	237
			2.375	3.5	812X-5-23	214	812X-6-23	251
9.875	8	0.875	0.875	2.5	108X-5-7	158	108X-6-7	189
			1.375	3	108X-5-13	173	108X-6-13	204
			1.875	3.5	108X-5-17	187	108X-6-17	218
			2.375	3.5	108X-5-23	198	108X-6-23	229
			2.875	4	108X-5-27	213	108X-6-27	244
			3.375	4.5	108X-5-33	227	108X-6-33	258
	11.875	0.875	0.875	2.5	1012X-5-7	235	1012X-6-7	281
			1.375	3	1012X-5-13	256	1012X-6-13	302
			1.875	3.5	1012X-5-17	277	1012X-6-17	323
			2.375	3.5	1012X-5-23	294	1012X-6-23	340
			2.875	4	1012X-5-27	316	1012X-6-27	362
			3.375	4.5	1012X-5-33	337	1012X-6-33	383
	16	0.875	0.875	2.5	1016X-5-7	316	1016X-6-7	378
			1.375	3	1016X-5-13	345	1016X-6-13	407
			1.875	3.5	1016X-5-17	374	1016X-6-17	436
			2.375	3.5	1016X-5-23	396	1016X-6-23	458
			2.875	4	1016X-5-27	425	1016X-6-27	487
			3.375	4.5	1016X-5-33	454	1016X-6-33	516
	20	0.875	0.875	2.5	1020X-5-7	395	1020X-6-7	472
			1.375	3	1020X-5-13	431	1020X-6-13	508
			1.875	3.5	1020X-5-17	467	1020X-6-17	544
			2.375	3.5	1020X-5-23	495	1020X-6-23	572
			2.875	4	1020X-5-27	531	1020X-6-27	608
			3.375	4.5	1020X-5-33	567	1020X-6-33	644

NOTE: Mold bases listed above may be ordered with "X", "AX", and "BX" plate thicknesses other than those shown in chart. Prices on request.

Refer to corresponding size "A" Series Mold Base for detail dimensions

5 PLATE SERIES

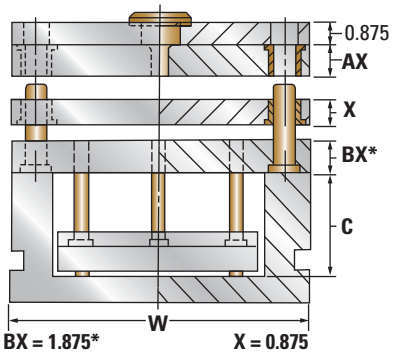

*1.375 for 88X and 812X only

6 PLATE SERIES

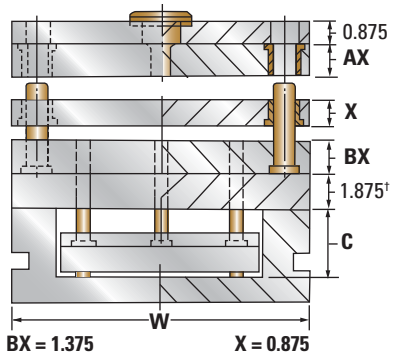

†1.375 for 88X and 812X only

WHEN ORDERING, PLEASE SPECIFY:

1. Quantity & Item Number
2. No. 1, No. 2, No. 3, or No. 7 Steel
3. Locating Ring Item Number
4. E, O and R Dimensions
5. Method of Shipment
6. 1.375 Top Clamping Plate if desired

10⅞" Stripper Plate Mold Bases

NO. 1 & NO. 2 STEEL ASSEMBLIES

All plates above ejector housing are No. 1 or No. 2 Steel, respectively.

NO. 3 STEEL ASSEMBLIES

"AX", "X", and "BX" plates are No. 3 Steel. Top clamping and support plates are No. 2 Steel.

NO. 7 STEEL ASSEMBLIES

Any or all plates available as requested.

W	L	TCP	AX	C	5 PLATE BX = 1.875 X = 0.875		6 PLATE BX = 1.375 X = 0.875	
					ITEM NUMBER	NET WT.	ITEM NUMBER	NET WT.
10.875	12	0.875	0.875	2.5	1112X-5-7	262	1112X-6-7	313
			1.375	3	1112X-5-13	286	1112X-6-13	337
			1.875	3.5	1112X-5-17	310	1112X-6-17	361
			2.375	3.5	1112X-5-23	329	1112X-6-23	380
			2.875	4	1112X-5-27	353	1112X-6-27	404
			3.375	4.5	1112X-5-33	377	1112X-6-33	428
	14	0.875	0.875	2.5	1114X-5-7	306	1114X-6-7	366
			1.375	3	1114X-5-13	334	1114X-6-13	394
			1.875	3.5	1114X-5-17	362	1114X-6-17	422
			2.375	3.5	1114X-5-23	384	1114X-6-23	444
			2.875	4	1114X-5-27	412	1114X-6-27	472
			3.375	4.5	1114X-5-33	440	1114X-6-33	500
	18	0.875	0.875	2.5	1118X-5-7	393	1118X-6-7	470
			1.375	3	1118X-5-13	429	1118X-6-13	506
			1.875	3.5	1118X-5-17	466	1118X-6-17	543
			2.375	3.5	1118X-5-23	493	1118X-6-23	570
			2.875	4	1118X-5-27	530	1118X-6-27	607
			3.375	4.5	1118X-5-33	566	1118X-6-33	643
	23.5	0.875	0.875	2.5	1123X-5-7	513	1123X-6-7	613
			1.375	3	1123X-5-13	560	1123X-6-13	660
			1.875	3.5	1123X-5-17	608	1123X-6-17	708
			2.375	3.5	1123X-5-23	644	1123X-6-23	744
			2.875	4	1123X-5-27	691	1123X-6-27	791
			3.375	4.5	1123X-5-33	739	1123X-6-33	839

NOTE: Mold bases listed above may be ordered with "X ", "AX", and "BX" plate thicknesses other than those shown in chart. Prices on request.

Refer to corresponding size "A" Series Mold Base for detail dimensions

5 PLATE SERIES

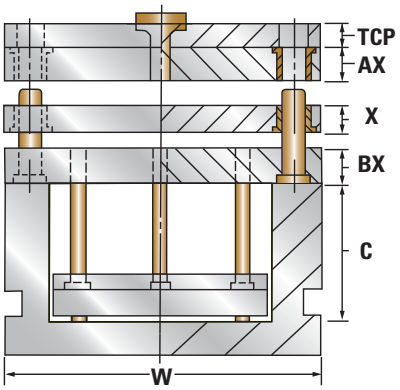

6 PLATE SERIES

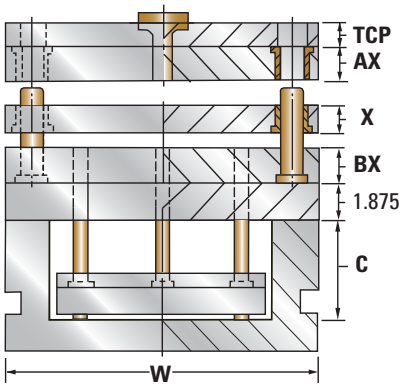

WHEN ORDERING, PLEASE SPECIFY:

1. Quantity & Item Number
2. No. 1, No. 2, No. 3, or No. 7 Steel
3. Locating Ring Item Number
4. E, O and R Dimensions
5. Method of Shipment
6. 1.375 Top Clamping Plate if desired

11⅞" Stripper Plate Mold Bases

NO. 1 & NO. 2 STEEL ASSEMBLIES

All plates above ejector housing are No. 1 or No. 2 Steel, respectively.

NO. 3 STEEL ASSEMBLIES

"AX", "X", and "BX" plates are No. 3 Steel.

Top clamping and support plates are No. 2 Steel.

NO. 7 STEEL ASSEMBLIES

Any or all plates available as requested.

W	L	AX	C	5 PLATE		6 PLATE	
				ITEM NUMBER	NET WT.	ITEM NUMBER	NET WT.
11.875	12	1.375	3	1212X-5-13	315	1212X-6-13	371
		1.875	3.5	1212X-5-17	341	1212X-6-17	397
		2.375	3.5	1212X-5-23	361	1212X-6-23	417
		2.875	4	1212X-5-27	387	1212X-6-27	443
		3.375	4	1212X-5-33	407	1212X-6-33	463
		3.875	4.5	1212X-5-37	433	1212X-6-37	489
	15	1.375	3	1215X-5-13	393	1215X-6-13	463
		1.875	3.5	1215X-5-17	426	1215X-6-17	496
		2.375	3.5	1215X-5-23	451	1215X-6-23	521
		2.875	4	1215X-5-27	483	1215X-6-27	553
		3.375	4	1215X-5-33	509	1215X-6-33	579
		3.875	4.5	1215X-5-37	541	1215X-6-37	611
	20	1.375	3	1220X-5-13	525	1220X-6-13	618
		1.875	3.5	1220X-5-17	568	1220X-6-17	661
		2.375	3.5	1220X-5-23	601	1220X-6-23	694
		2.875	4	1220X-5-27	645	1220X-6-27	738
		3.375	4	1220X-5-33	678	1220X-6-33	771
		3.875	4.5	1220X-5-37	721	1220X-6-37	814
	23.5	1.375	3	1223X-5-13	616	1223X-6-13	725
		1.875	3.5	1223X-5-17	667	1223X-6-17	776
		2.375	3.5	1223X-5-23	706	1223X-6-23	815
		2.875	4	1223X-5-27	757	1223X-6-27	866
		3.375	4	1223X-5-33	797	1223X-6-33	906
		3.875	4.5	1223X-5-37	848	1223X-6-37	957

NOTE: Mold bases listed above may be ordered with "X", "AX", and "BX" plate thicknesses other than those shown in chart. Prices on request.

Refer to corresponding size "A" Series Mold Base for detail dimensions.

5 PLATE SERIES

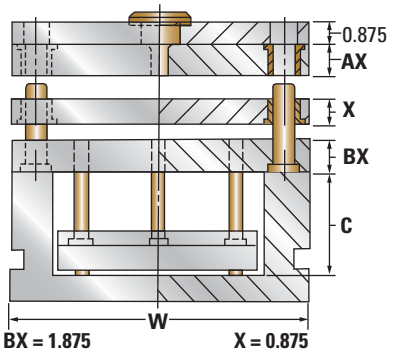

6 PLATE SERIES

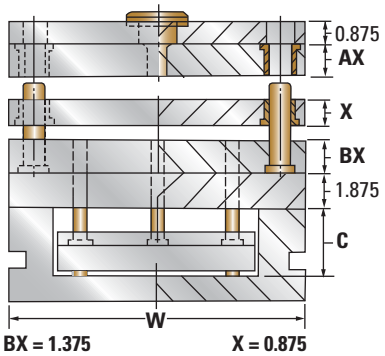

WHEN ORDERING, PLEASE SPECIFY:

1. Quantity & Item Number
2. No. 1, No. 2, No. 3, or No. 7 Steel
3. Locating Ring Item Number
4. E, O and R Dimensions
5. Method of Shipment
6. 1.375 Top Clamping Plate if desired

13⅜" Stripper Plate Mold Bases

NO. 1 & NO. 2 STEEL ASSEMBLIES

All plates above ejector housing are No. 1 or No. 2 Steel, respectively.

NO. 3 STEEL ASSEMBLIES

"AX", "X", and "BX" plates are No. 3 Steel.

Top clamping and support plates are No. 2 Steel.

NO. 7 STEEL ASSEMBLIES

Any or all plates available as requested.

W	L	AX	C	5 PLATE		6 PLATE	
				ITEM NUMBER	NET WT.	ITEM NUMBER	NET WT.
13.375	15	1.375	3	1315X-5-13	477	1315X-6-13	556
		1.875	3.5	1315X-5-17	513	1315X-6-17	592
		2.375	3.5	1315X-5-23	542	1315X-6-23	621
		2.875	4	1315X-5-27	578	1315X-6-27	657
		3.375	4	1315X-5-33	607	1315X-6-33	686
		3.875	4.5	1315X-5-37	643	1315X-6-37	722
	18	1.375	3	1318X-5-13	572	1318X-6-13	666
		1.875	3.5	1318X-5-17	616	1318X-6-17	710
		2.375	3.5	1318X-5-23	650	1318X-6-23	744
		2.875	4	1318X-5-27	694	1318X-6-27	788
		3.375	4	1318X-5-33	728	1318X-6-33	822
		3.875	4.5	1318X-5-37	771	1318X-6-37	865
	20.75	1.375	3	1321X-5-13	660	1321X-6-13	769
		1.875	3.5	1321X-5-17	710	1321X-6-17	819
		2.375	3.5	1321X-5-23	749	1321X-6-23	858
		2.875	4	1321X-5-27	800	1321X-6-27	909
		3.375	4	1321X-5-33	839	1321X-6-33	948
		3.875	4.5	1321X-5-37	889	1321X-6-37	998
	23.5	1.375	3	1323X-5-13	747	1323X-6-13	870
		1.875	3.5	1323X-5-17	804	1323X-6-17	927
		2.375	3.5	1323X-5-23	849	1323X-6-23	972
		2.875	4	1323X-5-27	906	1323X-6-27	1029
		3.375	4	1323X-5-33	950	1323X-6-33	1073
		3.875	4.5	1323X-5-37	1007	1323X-6-37	1130
	26	1.375	3	1326X-5-13	826	1326X-6-13	962
		1.875	3.5	1326X-5-17	889	1326X-6-17	1025
		2.375	3.5	1326X-5-23	939	1326X-6-23	1075
		2.875	4	1326X-5-27	1002	1326X-6-27	1138
		3.375	4	1326X-5-33	1051	1326X-6-33	1187
		3.875	4.5	1326X-5-37	1114	1326X-6-37	1250
	29.5	1.375	3	1323X-5-13	938	1329X-6-13	1092
		1.875	3.5	1329X-5-17	1009	1329X-6-17	1163
		2.375	3.5	1329X-5-23	1065	1329X-6-23	1219
		2.875	4	1329X-5-27	1137	1329X-6-27	1291
		3.375	4	1329X-5-33	1192	1329X-6-33	1346
		3.875	4.5	1329X-5-37	1264	1329X-6-37	1418

NOTE: Mold bases listed above may be ordered with "X", "AX", and "BX" plate thicknesses other than those shown in chart. Prices on request.

Refer to corresponding size "A" Series Mold Base for detail dimensions.

5 PLATE SERIES

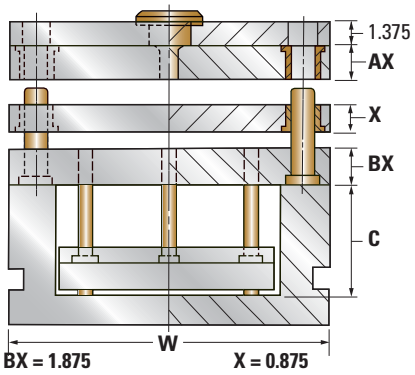

6 PLATE SERIES

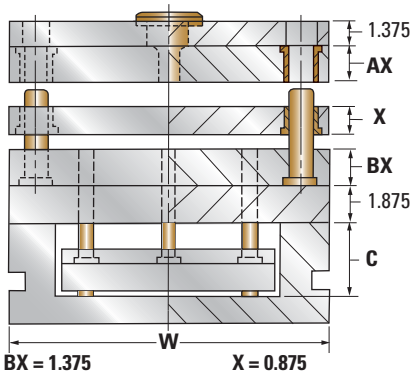

WHEN ORDERING, PLEASE SPECIFY:

1. Quantity & Item Number
2. No. 1, No. 2, No. 3, or No. 7 Steel
3. Locating Ring Item Number
4. E, O and R Dimensions
5. Method of Shipment

14⅞" Stripper Plate Mold Bases

NO. 1 & NO. 2 STEEL ASSEMBLIES

All plates above ejector housing are No. 1 or No. 2 Steel, respectively.

NO. 3 STEEL ASSEMBLIES

"AX", "X", and "BX" plates are No. 3 Steel.

Top clamping and support plates are No. 2 Steel.

NO. 7 STEEL ASSEMBLIES

Any or all plates available as requested.

W	L	AX	C	5 PLATE		6 PLATE	
				ITEM NUMBER	NET WT.	ITEM NUMBER	NET WT.
14.875	17.875	1.375	3	1518X-5-13	668	1518X-6-13	772
		1.875	3.5	1518X-5-17	715	1518X-6-17	819
		2.375	3.5	1518X-5-23	752	1518X-6-23	856
		2.875	4	1518X-5-27	800	1518X-6-27	904
		3.375	4	1518X-5-33	837	1518X-6-33	941
		3.875	4.5	1518X-5-37	885	1518X-6-37	989
	23.75	1.375	3	1524X-5-13	887	1524X-6-13	1025
		1.875	3.5	1524X-5-17	950	1524X-6-17	1088
		2.375	3.5	1524X-5-23	1000	1524X-6-23	1138
		2.875	4	1524X-5-27	1063	1524X-6-27	1201
		3.375	4	1524X-5-33	1112	1524X-6-33	1250
		3.875	4.5	1524X-5-37	1175	1524X-6-37	1313
	29.5	1.375	3	1529X-5-13	1102	1529X-6-13	1273
		1.875	3.5	1529X-5-17	1180	1529X-6-17	1351
		2.375	3.5	1529X-5-23	1242	1529X-6-23	1413
		2.875	4	1529X-5-27	1320	1529X-6-27	1491
		3.375	4	1529X-5-33	1382	1529X-6-33	1553
		3.875	4.5	1529X-5-37	1460	1529X-6-37	1631

NOTE: Mold bases listed above may be ordered with "X", "AX", and "BX" plate thicknesses other than those shown in chart. Prices on request.

Refer to corresponding size "A" Series Mold Base for detail dimensions.

5 PLATE SERIES

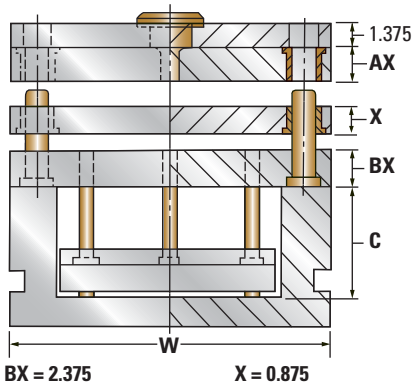

6 PLATE SERIES

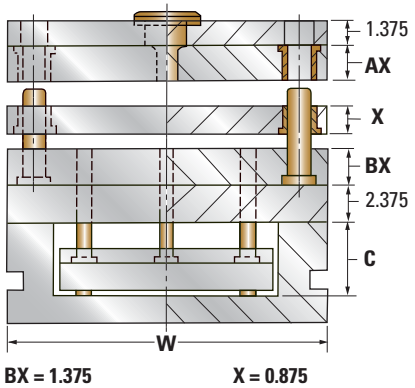

WHEN ORDERING, PLEASE SPECIFY:

1. Quantity & Item Number
2. No. 1, No. 2, No. 3, or No. 7 Steel
3. Locating Ring Item Number
4. E, O and R Dimensions
5. Method of Shipment

15⅞" and 16½" Stripper Plate Mold Bases

NO. 1 & NO. 2 STEEL ASSEMBLIES

All plates above ejector housing are No. 1 or No. 2 Steel, respectively.

NO. 3 STEEL ASSEMBLIES

"AX", "X", and "BX" plates are No. 3 Steel.

Top clamping and support plates are No. 2 Steel.

NO. 7 STEEL ASSEMBLIES

Any or all plates available as requested.

5 PLATE SERIES

6 PLATE SERIES

W	L	AX	C	5 PLATE		6 PLATE	
				ITEM NUMBER	NET WT.	ITEM NUMBER	NET WT.
15.875	16	1.375	3	1616X-5-13	637	1616X-6-13	736
		1.875	3.5	1616X-5-17	682	1616X-6-17	781
		2.375	3.5	1616X-5-23	717	1616X-6-23	816
		2.875	4	1616X-5-27	762	1616X-6-27	861
		3.375	4	1616X-5-33	798	1616X-6-33	897
		3.875	4.5	1616X-5-37	843	1616X-6-37	942
	20	1.375	3	1620X-5-13	796	1620X-6-13	920
		1.875	3.5	1620X-5-17	852	1620X-6-17	976
		2.375	3.5	1620X-5-23	896	1620X-6-23	1020
		2.875	4	1620X-5-27	952	1620X-6-27	1076
		3.375	4	1620X-5-33	997	1620X-6-33	1121
		3.875	4.5	1620X-5-37	1053	1620X-6-37	1177
	23.5	1.375	3	1623X-5-13	935	1623X-6-13	1081
		1.875	3.5	1623X-5-17	1001	1623X-6-17	1147
		2.375	3.5	1623X-5-23	1053	1623X-6-23	1199
		2.875	4	1623X-5-27	1119	1623X-6-27	1265
		3.375	4	1623X-5-33	1171	1623X-6-33	1317
		3.875	4.5	1623X-5-37	1237	1623X-6-37	1383
	26	1.375	3	1626X-5-13	1034	1626X-6-13	1195
		1.875	3.5	1626X-5-17	1107	1626X-6-17	1268
		2.375	3.5	1626X-5-23	1165	1626X-6-23	1326
		2.875	4	1626X-5-27	1238	1626X-6-27	1399
		3.375	4	1626X-5-33	1296	1626X-6-33	1457
		3.875	4.5	1626X-5-37	1368	1626X-6-37	1529
	29.5	1.375	3	1629X-5-13	1174	1629X-6-13	1357
		1.875	3.5	1629X-5-17	1256	1629X-6-17	1439
		2.375	3.5	1629X-5-23	1322	1629X-6-23	1505
		2.875	4	1629X-5-27	1404	1629X-6-27	1587
		3.375	4	1629X-5-33	1470	1629X-6-33	1653
		3.875	4.5	1629X-5-37	1553	1629X-6-37	1736
	35.5	1.375	3	1635X-5-13	1412	1635X-6-13	1632
		1.875	3.5	1635X-5-17	1511	1635X-6-17	1731
		2.375	3.5	1635X-5-23	1591	1635X-6-23	1811
		2.875	4	1635X-5-27	1690	1635X-6-27	1910
		3.375	4	1635X-5-33	1769	1635X-6-33	1989
		3.875	4.5	1635X-5-37	1868	1635X-6-37	2088
16.5	23.75	1.375	3	1724X-5-13	981	1724X-6-13	1134
		1.875	3.5	1724X-5-17	1050	1724X-6-17	1203
		2.375	3.5	1724X-5-23	1105	1724X-6-23	1258
		2.875	4	1724X-5-27	1173	1724X-6-27	1326
		3.375	4	1724X-5-33	1229	1724X-6-33	1382
		3.875	4.5	1724X-5-37	1297	1724X-6-37	1450
	29.5	1.375	3	1729X-5-13	1219	1729X-6-13	1409
		1.875	3.5	1729X-5-17	1304	1729X-6-17	1494
		2.375	3.5	1729X-5-23	1372	1729X-6-23	1562
		2.875	4	1729X-5-27	1457	1729X-6-27	1647
		3.375	4	1729X-5-33	1526	1729X-6-33	1716
		3.875	4.5	1729X-5-37	1611	1729X-6-37	1801

NOTE: Mold bases listed above may be ordered with "X ", "AX", and "BX" plate thicknesses other than those shown in chart. Prices on request.

WHEN ORDERING, PLEASE SPECIFY:

1. Quantity & Item Number
2. No. 1, No. 2, No. 3, or No. 7 Steel
3. Locating Ring Item Number
4. E, O and R Dimensions
5. Method of Shipment

17⅞" Stripper Plate Mold Bases

NO. 1 & NO. 2 STEEL ASSEMBLIES

All plates above ejector housing are No. 1 or No. 2 Steel, respectively.

NO. 3 STEEL ASSEMBLIES

"AX", "X", and "BX" plates are No. 3 Steel.

Top clamping and support plates are No. 2 Steel.

NO. 7 STEEL ASSEMBLIES

Any or all plates available as requested.

W	L	AX	C	5 PLATE		6 PLATE	
				ITEM NUMBER	NET WT.	ITEM NUMBER	NET WT.
17.875	18	1.375	3	1818X-5-13	850	1818X-6-13	976
		1.875	3.5	1818X-5-17	905	1818X-6-17	1031
		2.375	3.5	1818X-5-23	951	1818X-6-23	1077
		2.875	4	1818X-5-27	1006	1818X-6-27	1132
		3.375	4	1818X-5-33	1051	1818X-6-33	1177
		3.875	4.5	1818X-5-37	1107	1818X-6-37	1233
	20	1.375	3	1820X-5-13	944	1820X-6-13	1084
		1.875	3.5	1820X-5-17	1006	1820X-6-17	1146
		2.375	3.5	1820X-5-23	1056	1820X-6-23	1196
		2.875	4	1820X-5-27	1118	1820X-6-27	1258
		3.375	4	1820X-5-33	1168	1820X-6-33	1308
		3.875	4.5	1820X-5-37	1230	1820X-6-37	1370
	23.5	1.375	3	1823X-5-13	1109	1823X-6-13	1273
		1.875	3.5	1823X-5-17	1182	1823X-6-17	1346
		2.375	3.5	1823X-5-23	1241	1823X-6-23	1405
		2.875	4	1823X-5-27	1313	1823X-6-27	1477
		3.375	4	1823X-5-33	1372	1823X-6-33	1536
		3.875	4.5	1823X-5-37	1445	1823X-6-37	1609
	26	1.375	3	1826X-5-13	1227	1826X-6-13	1409
		1.875	3.5	1826X-5-17	1307	1826X-6-17	1489
		2.375	3.5	1826X-5-23	1373	1826X-6-23	1555
		2.875	4	1826X-5-27	1453	1826X-6-27	1635
		3.375	4	1826X-5-33	1518	1826X-6-33	1700
		3.875	4.5	1826X-5-37	1598	1826X-6-37	1780
	29.5	1.375	3	1829X-5-13	1392	1829X-6-13	1598
		1.875	3.5	1829X-5-17	1483	1829X-6-17	1689
		2.375	3.5	1829X-5-23	1558	1829X-6-23	1764
		2.875	4	1829X-5-27	1648	1829X-6-27	1854
		3.375	4	1829X-5-33	1723	1829X-6-33	1929
		3.875	4.5	1829X-5-37	1813	1829X-6-37	2019
	35.5	1.375	3	1835X-5-13	1676	1835X-6-13	1924
		1.875	3.5	1835X-5-17	1785	1835X-6-17	2033
		2.375	3.5	1835X-5-23	1874	1835X-6-23	2122
		2.875	4	1835X-5-27	1983	1835X-6-27	2231
		3.375	4	1835X-5-33	2073	1835X-6-33	2321
		3.875	4.5	1835X-5-37	2182	1835X-6-37	2430

NOTE: Mold bases listed above may be ordered with "X", "AX", and "BX" plate thicknesses other than those shown in chart. Prices on request.

Refer to corresponding size "A" Series Mold Base for detail dimensions.

5 PLATE SERIES

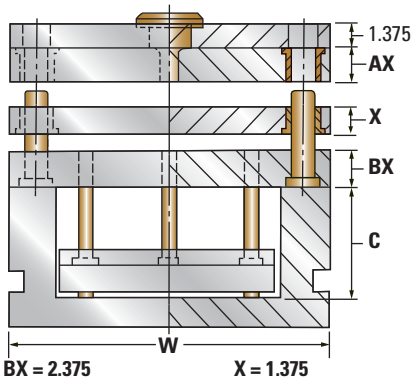

6 PLATE SERIES

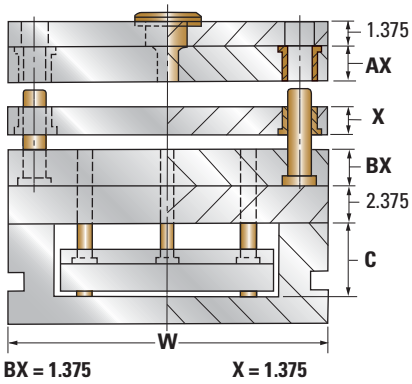

WHEN ORDERING, PLEASE SPECIFY:

1. Quantity & Item Number
2. No. 1, No. 2, No. 3, or No. 7 Steel
3. Locating Ring Item Number
4. E, O and R Dimensions
5. Method of Shipment

19½" and 23¾" Stripper Plate Mold Bases

NO. 1 & NO. 2 STEEL ASSEMBLIES

All plates above ejector housing are No. 1 or No. 2 Steel, respectively.

NO. 3 STEEL ASSEMBLIES

"AX", "X", and "BX" plates are No. 3 Steel.

Top clamping and support plates are No. 2 Steel.

NO. 7 STEEL ASSEMBLIES

Any or all plates available as requested.

W	L	AX	C	5 PLATE		6 PLATE	
				ITEM NUMBER	NET WT.	ITEM NUMBER	NET WT.
19.5	23.75	1.375	3	1924X-5-13	1221	1924X-6-13	1402
		1.875	3.5	1924X-5-17	1300	1924X-6-17	1481
		2.375	3.5	1924X-5-23	1365	1924X-6-23	1546
		2.875	4	1924X-5-27	1443	1924X-6-27	1624
		3.375	4	1924X-5-33	1509	1924X-6-33	1690
		3.875	4.5	1924X-5-37	1587	1924X-6-37	1768
	29.5	1.375	3	1929X-5-13	1516	1929X-6-13	1741
		1.875	3.5	1929X-5-17	1614	1929X-6-17	1839
		2.375	3.5	1929X-5-23	1695	1929X-6-23	1920
		2.875	4	1929X-5-27	1793	1929X-6-27	2018
		3.375	4	1929X-5-33	1874	1929X-6-33	2099
		3.875	4.5	1929X-5-37	1971	1929X-6-37	2196
	35.5	1.375	3	1935X-5-13	1825	1935X-6-13	2095
		1.875	3.5	1935X-5-17	1942	1935X-6-17	2212
		2.375	3.5	1935X-5-23	2040	1935X-6-23	2310
		2.875	4	1935X-5-27	2157	1935X-6-27	2427
		3.375	4	1935X-5-33	2255	1935X-6-33	2525
		3.875	4.5	1935X-5-37	2372	1935X-6-37	2642
23.75	23.75	1.375	3	2424X-5-13	1562	2424X-6-13	1782
		1.875	3.5	2424X-5-17	1655	2424X-6-17	1875
		2.375	3.5	2424X-5-23	1734	2424X-6-23	1954
		2.875	4	2424X-5-27	1827	2424X-6-27	2047
		3.375	4	2424X-5-33	1907	2424X-6-33	2127
		3.875	4.5	2424X-5-37	2000	2424X-6-37	2220
	29.5	1.375	3	2429X-5-13	1940	2429X-6-13	2213
		1.875	3.5	2429X-5-17	2055	2429X-6-17	2328
		2.375	3.5	2429X-5-23	2154	2429X-6-23	2427
		2.875	4	2429X-5-27	2269	2429X-6-27	2542
		3.375	4	2429X-5-33	2368	2429X-6-33	2641
		3.875	4.5	2429X-5-37	2483	2429X-6-37	2756
	35.5	1.375	3	2435X-5-13	2334	2435X-6-13	2663
		1.875	3.5	2435X-5-17	2473	2435X-6-17	2802
		2.375	3.5	2435X-5-23	2592	2435X-6-23	2921
		2.875	4	2435X-5-27	2730	2435X-6-27	3059
		3.375	4	2435X-5-33	2850	2435X-6-33	3179
		3.875	4.5	2435X-5-37	2988	2435X-6-37	3317

NOTE: Mold bases listed above may be ordered with "X ", "AX", and "BX" plate thicknesses other than those shown in chart. Prices on request.

Refer to corresponding size "A" Series Mold Base for detail dimensions.

5 PLATE SERIES

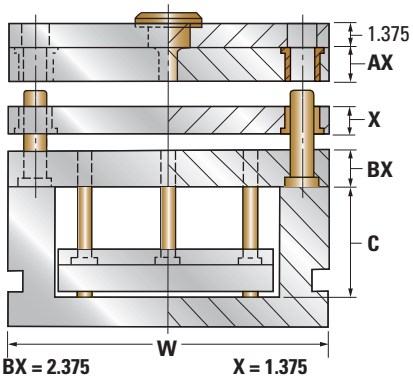

6 PLATE SERIES

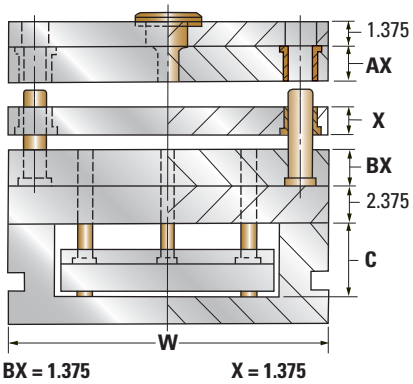

WHEN ORDERING, PLEASE SPECIFY:

1. Quantity & Item Number
2. No. 1, No. 2, No. 3, or No. 7 Steel
3. Locating Ring Item Number
4. E, O and R Dimensions
5. Method of Shipment

Multiple Stripper Plate Mold Bases

Multiple Stripper Plate Mold Bases consist of a 5 or 6 plate "X" Series Mold Base with one or more floating plates added to the assembly. The assembly "without the support plate" has the same construction as the 5 Plate "X" Series. When this type of assembly is required please refer to the plate designations listed below. Prices quoted on request.

WITHOUT SUPPORT PLATE **WITH SUPPORT PLATE**

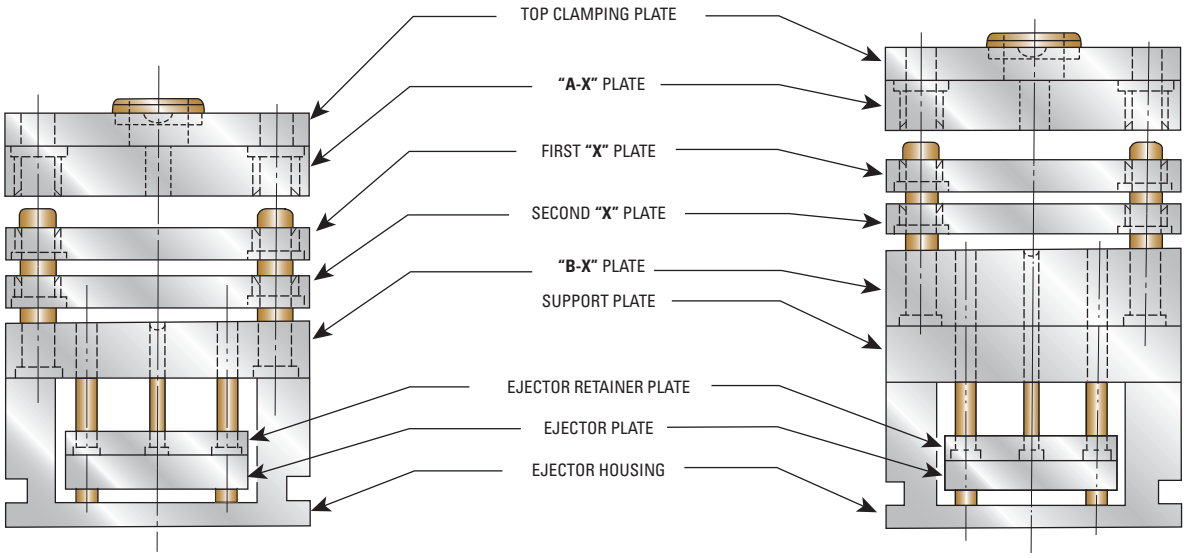

VARIATIONS IN EJECTOR ASSEMBLY

DOUBLE EJECTION

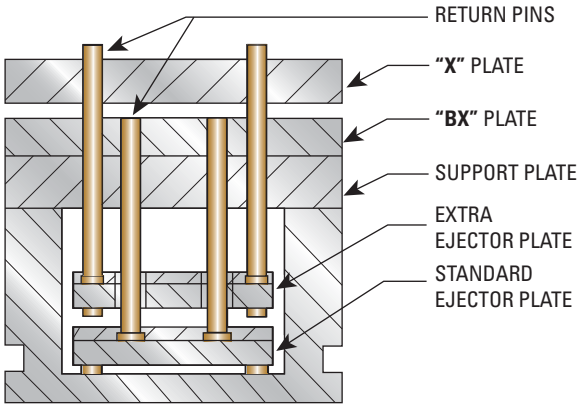

Double ejection is sometimes required when using multiple stripper plate mold assemblies. Prices quoted on request.

GUIDED EJECTION

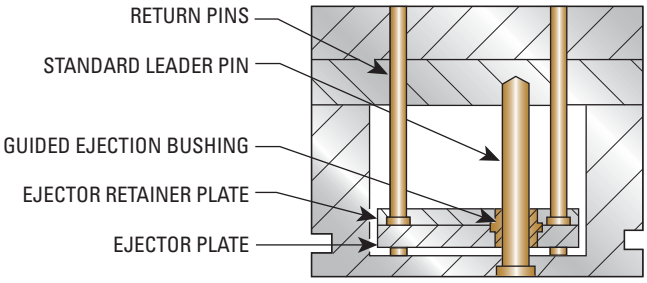

When an exceptionally long stroke is required, or when ejector pin diameters are extremely small a guided ejector assembly can give additional rigidity.

AX-Series Mold Bases

NO. 1 OR NO. 2 STEEL ASSEMBLIES

All plates above ejector housing are No. 1 or No. 2 Steel, respectively.

NO. 3 STEEL ASSEMBLIES

"A", "X-1", and "B" plates are No. 3 Steel.

Top clamping and support plates are No. 2 Steel.

NO. 7 STEEL ASSEMBLIES

Any or all plates available as requested.

"AX" Series Assembly

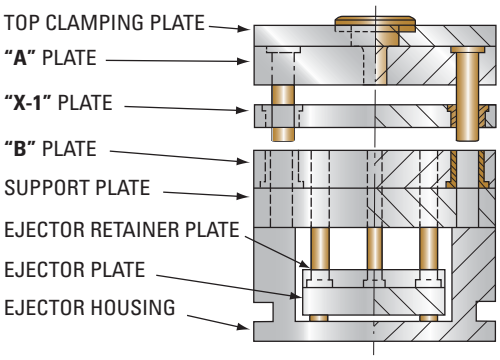

MOLD BASE SIZE WIDTH (W)	TOP CLAMPING PLATE THICKNESS
7.875 to 11.875	0.875
13.375 to 23.75	1.375

"X-1" PLATE THICKNESSES AVAILABLE:

0.875, 1.375, 1.875, 2.375, 2.875, 3.375, 4.875, 5.875

A DME Standard "AX" Series Mold Base is basically an "A" series type mold base with a floating plate ("X-1" plate) added between the "A" and "B" Plates. This type assembly is used where it is desirable to have the floating plate remain with the upper half of the assembly.

STANDARD MOLD BASE SIZE W	STANDARD MOLD BASE SIZE L	ITEM NUMBER PREFIX
7.875	7.875	88AX
	11.875	812AX
9.875	8	108AX
	11.875	1012AX
	16	1016AX
	20	1020AX
10.875	12	1112AX
	14	1114AX
	18	1118AX
	23.5	1123AX
11.875	12	1212AX
	15	1215AX
	20	1220AX
	23.5	1223AX
13.375	15	1315AX
	18	1318AX
	20.75	1321AX
	23.5	1323AX
	26	1326AX
	29.5	1329AX
14.875	17.875	1518AX
	23.75	1524AX
	29.5	1529AX

STANDARD MOLD BASE SIZE W	STANDARD MOLD BASE SIZE L	ITEM NUMBER PREFIX
15.875	16	1616AX
	20	1620AX
	23.5	1623AX
	26	1626AX
	29.5	1629AX
	35.5	1635AX
16.5	23.75	1724AX
	29.5	1729AX
17.875	18	1818AX
	20	1820AX
	23.5	1823AX
	26	1826AX
	29.5	1829AX
	35.5	1835AX
19.5	23.75	1924AX
	29.5	1929AX
	35.5	1935AX
23.75	23.75	2424AX
	29.5	2429AX
	35.5	2435AX

INSTRUCTIONS FOR ORDERING:

When ordering "AX" Series Mold Bases, refer to the corresponding size "A" Series Mold Base for detailed dimensions.

To create a Item number, add an "X" after the "A" in Item number of corresponding size A-Series mold base, and follow with thickness of the (1) A-Plate, (2) X-1 Plate and (3) B-Plate.

Example: 1012AX-13-17-23

WHEN ORDERING, PLEASE SPECIFY:

1. Quantity & Item Number
2. No. 1, No. 2, No. 3, or No. 7 Steel
3. X-1 Plate Thickness
4. Locating Ring Item Number
5. E, O and R Dimensions
6. Method of Shipment
7. 1.375 Top Clamping Plate if desired

7⅞" T-Series (3-Plate) Mold Bases

A typical 3-plate top runner mold operates as follows: The mold opens first at Parting Line 1 (spring loaded). The runner and cavity sprues are pulled from the cavities in the "X-2" Plate and held against the "X-1" Plate by undercut puller pins.

As the mold continues to open ("X-2" Plate moving forward), stripper bolts SB-1 pull the "X-1" Plate forward (at the end of the "X-2" Plate movement). The "X-1" Plate travel is determined by stripper bolts SB-2. The travel of the "X-1" Plate (breaking at Parting Line 2) strips the entire runner system from the puller pins, breaks the main sprue (held to a minimum length), and allows the runner to drop free. Mold opening at Parting Line 3 then takes place for piece-part ejection.

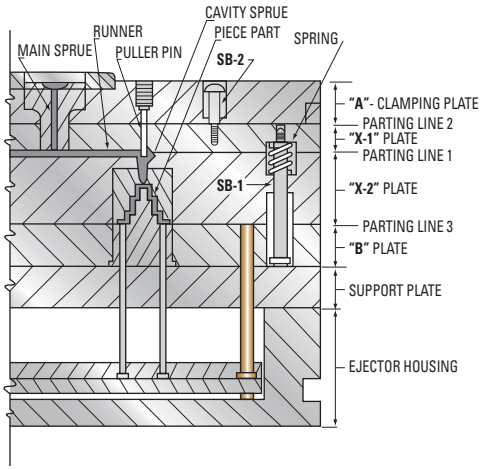

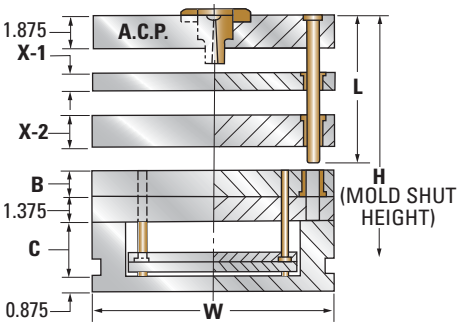

For detailed dimensions, see corresponding size "A" Series Mold Base

X-1 = 0.875				7.875 × 7.875	
X-2	B	C	H	ITEM NUMBER	NET WT.
1.375	0.875	2.5	9.75	88T-13-7	153
	1.375	2.5	10.25	88T-13-13	162
	1.875	2.5	10.75	88T-13-17	171
1.875	0.875	2.5	10.25	88T-17-7	162
	1.375	2.5	10.75	88T-17-13	171
	1.875	2.5	11.25	88T-17-17	180
2.375	1.375	2.5	11.25	88T-23-13	180
	1.875	2.5	11.75	88T-23-17	188
	2.375	3	12.75	88T-23-23	200
2.875	1.375	3	12.25	88T-27-13	191
	1.875	3.5	13.25	88T-27-17	203
	2.375	3.5	13.75	88T-27-23	212
3.375	1.875	3.5	13.75	88T-33-17	212
	2.375	4	14.75	88T-33-23	223
	2.875	4	15.25	88T-33-27	232
3.875	1.875	3.5	14.25	88T-37-17	220
	2.375	4	15.25	88T-37-23	232
	2.875	4	15.75	88T-37-27	241
4.875	2.375	4	16.25	88T-47-23	250
	2.875	4	16.75	88T-47-27	258
	3.375	4.5	17.75	88T-47-33	270

X-1 = 0.875				7.875 × 11.875	
X-2	B	C	H	ITEM NUMBER	NET WT.
1.375	0.875	2.5	9.75	812T-13-7	237
	1.375	3	10.75	812T-13-13	254
	1.875	3	11.25	812T-13-17	268
1.875	0.875	2.5	10.25	812T-17-7	250
	1.375	3	11.25	812T-17-13	268
	1.875	3.5	12.25	812T-17-17	285
2.375	1.375	3	11.75	812T-23-13	281
	1.875	3.5	12.75	812T-23-17	298
	2.375	3.5	13.25	812T-23-23	312
2.875	1.375	3	12.25	812T-27-13	294
	1.875	3.5	13.25	812T-27-17	312
	2.375	3.5	13.75	812T-27-23	325
3.375	1.875	3.5	13.75	812T-33-17	325
	2.375	4	14.75	812T-33-23	342
	2.875	4	15.25	812T-33-27	355
3.875	1.875	3.5	14.25	812T-37-17	338
	2.375	4	15.25	812T-37-23	355
	2.875	4	15.75	812T-37-27	369
4.875	2.375	4	16.25	812T-47-23	382
	2.875	4	16.75	812T-47-27	395
	3.375	4.5	17.75	812T-47-33	413

NOTE: Stripper bolts, puller pins and spring shown are not included. When gating directly into the cavity from a top runner, the 3-plate "T" Series assembly may be used. It incorporates an additional runner stripper plate ("X-1") to facilitate automatic removal of the runner from the mold.

The "X-1" and "X-2" Plates have standard shoulder bushings and ride on standard leader pins. (When heavy "X-2" Plates are required, moldmaker may want to specify larger diameter leader pins and have them relocated. Contact customer service for a quotation to your specifications). The "X-1" Plate is supplied without a center hole. A standard sprue bushing long enough to extend through the "X-1" Plate is provided to allow the moldmaker to finish the sprue bushing hole as desired, or to install a recessed bushing to give the shortest main sprue length for minimum stripper plate movement.

Detailed dimensions for the "T" Series are identical to corresponding size "A" Series Mold Bases. Center sprue puller pin and pin holes as well as the socket head cap screws in the "A" — Clamping Plate are omitted since the are not required.

9⅞" T-Series Mold Bases

X-1 = 0.875				9.875 × 8"	
X-2	B	C	H	ITEM NUMBER	NET WT.
1.375	0.875	2.5	10.25	108T-13-7	211
	1.375	2.5	10.75	108T-13-13	223
	1.875	3	11.75	108T-13-17	237
1.875	0.875	2.5	10.75	108T-17-7	223
	1.375	3	11.75	108T-17-13	237
	1.875	3.5	12.75	108T-17-17	251
2.375	1.375	3	12.25	108T-23-13	248
	1.875	3.5	13.25	108T-23-17	263
	2.375	3.5	13.75	108T-23-23	274
2.875	1.375	3	12.75	108T-27-13	259
	1.875	3.5	13.75	108T-27-17	274
	2.375	3.5	14.25	108T-27-23	285
3.375	1.875	3.5	14.25	108T-33-17	285
	2.375	4	15.25	108T-33-23	299
	2.875	4	15.75	108T-33-27	311
3.875	1.875	3.5	14.75	108T-37-17	296
	2.375	4	15.75	108T-37-23	311
	2.875	4	16.25	108T-37-27	322
4.875	2.375	4	16.75	108T-47-23	333
	2.875	4	17.25	108T-47-27	344
	3.375	4.5	18.25	108T-47-33	359

X-1 = 0.875				9.875 × 16"	
X-2	B	C	H	ITEM NUMBER	NET WT.
1.375	0.875	2.5	10.25	1016T-13-7	422
	1.375	3	11.25	1016T-13-13	451
	1.875	3	11.75	1016T-13-17	473
1.875	0.875	2.5	10.75	1016T-17-7	444
	1.375	3	11.75	1016T-17-13	473
	1.875	3.5	12.75	1016T-17-17	502
2.375	1.375	3	12.25	1016T-23-13	496
	1.875	3.5	13.25	1016T-23-17	525
	2.375	3.5	13.75	1016T-23-23	547
2.875	1.375	3	12.75	1016T-27-13	518
	1.875	3.5	13.75	1016T-27-17	547
	2.375	3.5	14.25	1016T-27-23	569
3.375	1.875	3.5	14.25	1016T-33-17	569
	2.375	4	15.25	1016T-33-23	598
	2.875	4	15.75	1016T-33-27	621
3.875	1.875	3.5	14.75	1016T-37-17	592
	2.375	4	15.75	1016T-37-23	621
	2.875	4	16.25	1016T-37-27	643
4.875	2.375	4	16.75	1016T-47-23	665
	2.875	4	17.25	1016T-47-27	688
	3.375	4.5	18.25	1016T-47-33	717

NO. 1 OR NO. 2 STEEL ASSEMBLIES

All plates above ejector housing are No. 1 or No. 2 Steel, respectively.

NO. 3 STEEL ASSEMBLIES

"X-1", "X-2" and "B" Plates are No. 3 Steel.

"A" -Clamping and Support Plates are No. 2 Steel.

NO. 7 STEEL ASSEMBLIES

Any or all plates available as requested.

NOTE: For 3-Plate Extension Bushings, see page 197.

X-1 = 0.875				9.875 × 11.875	
X-2	B	C	H	ITEM NUMBER	NET WT.
1.375	0.875	2.5	10.25	1012T-13-7	313
	1.375	3	11.25	1012T-13-13	335
	1.875	3	11.75	1012T-13-17	351
1.875	0.875	2.5	10.75	1012T-17-7	330
	1.375	3	11.75	1012T-17-13	352
	1.875	3.5	12.75	1012T-17-17	373
2.375	1.375	3	12.25	1012T-23-13	368
	1.875	3.5	13.25	1012T-23-17	390
	2.375	3.5	13.75	1012T-23-23	406
2.875	1.375	3	12.75	1012T-27-13	385
	1.875	3.5	13.75	1012T-27-17	406
	2.375	3.5	14.25	1012T-27-23	423
3.375	1.875	3.5	14.25	1012T-33-17	423
	2.375	4	15.25	1012T-33-23	444
	2.875	4	15.75	1012T-33-27	461
3.875	1.875	3.5	14.75	1012T-37-17	439
	2.375	4	15.75	1012T-37-23	461
	2.875	4	16.25	1012T-37-27	477
4.875	2.375	4	16.75	1012T-47-23	494
	2.875	4	17.25	1012T-47-27	511
	3.375	4.5	18.25	1012T-47-33	532

X-1 = 0.875				9.875 × 20"	
X-2	B	C	H	ITEM NUMBER	NET WT.
1.375	0.875	2.5	10.25	1020T-13-7	528
	1.375	3	11.25	1020T-13-13	564
	1.875	3	11.75	1020T-13-17	592
1.875	0.875	2.5	10.75	1020T-17-7	556
	1.375	3	11.75	1020T-17-13	592
	1.875	3.5	12.75	1020T-17-17	628
2.375	1.375	3	12.25	1020T-23-13	620
	1.875	3.5	13.25	1020T-23-17	656
	2.375	3.5	13.75	1020T-23-23	684
2.875	1.375	3	12.75	1020T-27-13	648
	1.875	3.5	13.75	1020T-27-17	684
	2.375	3.5	14.25	1020T-27-23	712
3.375	1.875	3.5	14.25	1020T-33-17	712
	2.375	4	15.25	1020T-33-23	748
	2.875	4	15.75	1020T-33-27	776
3.875	1.875	3.5	14.75	1020T-37-17	740
	2.375	4	15.75	1020T-37-23	776
	2.875	4	16.25	1020T-37-27	804
4.875	2.375	4	16.75	1020T-47-23	832
	2.875	4	17.25	1020T-47-27	860
	3.375	4.5	18.25	1020T-47-33	896

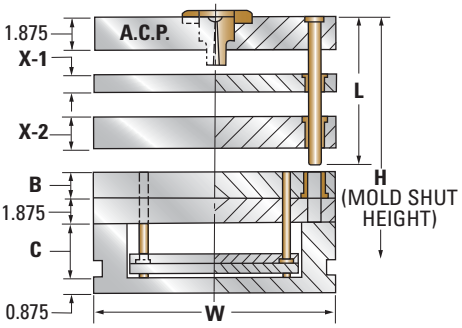

For detailed dimensions, see corresponding size "A" Series Mold Bases.

WHEN ORDERING, PLEASE SPECIFY:

1. Quantity & Item Number
2. No. 1, No. 2, No. 3, or No. 7 Steel
3. Locating Ring Item Number
4. E, O and R Dimensions
5. L Dimension (Leader Pin Length)
6. Method of Shipment

10⅞" T-Series Mold Bases

NO. 1 OR NO. 2 STEEL ASSEMBLIES

All plates above ejector housing are No. 1 or No. 2 Steel, respectively.

NO. 3 STEEL ASSEMBLIES

"X-1", "X-2" and "B" Plates are No. 3 Steel.

"A"- Clamping and Support Plates are No. 2 Steel.

NO. 7 STEEL ASSEMBLIES

Any or all plates available as requested.

NOTE: For 3-Plate Extension Bushings, see page 197.

X-1 = 0.875				10.875 × 12"	
X-2	B	C	H	ITEM NUMBER	NET WT.
1.875	0.875	2.5	10.75	1112T-17-7	368
	1.375	3	11.75	1112T-17-13	393
	1.875	3.5	12.75	1112T-17-17	417
2.375	1.375	3	12.25	1112T-23-13	411
	1.875	3.5	13.25	1112T-23-17	435
	2.375	3.5	13.75	1112T-23-23	454
2.875	1.375	3	12.75	1112T-27-13	430
	1.875	3.5	13.75	1112T-27-17	454
	2.375	3.5	14.25	1112T-27-23	472
3.375	1.875	3.5	14.25	1112T-33-17	472
	2.375	4	15.25	1112T-33-23	497
	2.875	4	15.75	1112T-33-27	515
3.875	1.875	3.5	14.75	1112T-37-17	491
	2.375	4	15.75	1112T-37-23	515
	2.875	4	16.25	1112T-37-27	534
4.875	2.375	4	16.75	1112T-47-23	552
	2.875	4	17.25	1112T-47-27	570
	3.375	4.5	18.25	1112T-47-33	595
5.875	2.875	4	18.25	1112T-57-27	607
	3.875	4.5	19.75	1112T-57-37	650
	4.875	4.5	20.75	1112T-57-47	687

X-1 = 0.875				10.875 × 18"	
X-2	B	C	H	ITEM NUMBER	NET WT.
1.875	0.875	2.5	10.75	1118T-17-7	552
	1.375	3	11.75	1118T-17-13	589
	1.875	3.5	12.75	1118T-17-17	625
2.375	1.375	3	12.25	1118T-23-13	616
	1.875	3.5	13.25	1118T-23-17	653
	2.375	3.5	13.75	1118T-23-23	680
2.875	1.375	3	12.75	1118T-27-13	644
	1.875	3.5	13.75	1118T-27-17	680
	2.375	3.5	14.25	1118T-27-23	708
3.375	1.875	3.5	14.25	1118T-33-17	708
	2.375	4	15.25	1118T-33-23	745
	2.875	4	15.75	1118T-33-27	772
3.875	1.875	3.5	14.75	1118T-37-17	736
	2.375	4	15.75	1118T-37-23	772
	2.875	4	16.25	1118T-37-27	800
4.875	2.375	4	16.75	1118T-47-23	828
	2.875	4	17.25	1118T-47-27	855
	3.375	4.5	18.25	1118T-47-33	892
5.875	2.875	4	18.25	1118T-57-27	911
	3.875	4.5	19.75	1118T-57-37	975
	4.875	4.5	20.75	1118T-57-47	1030

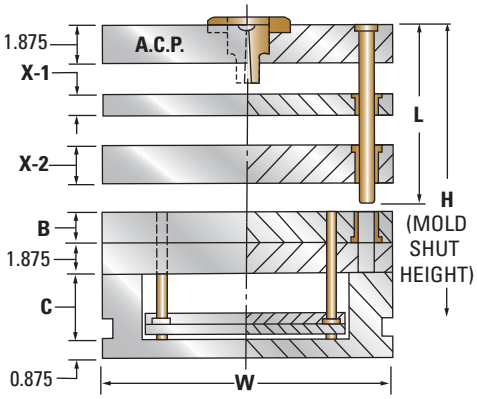

For detailed dimensions, see corresponding size "A" Series Mold Bases.

X-1 = 0.875				10.875 × 14"	
X-2	B	C	H	ITEM NUMBER	NET WT.
1.875	0.875	2.5	10.75	1114T-17-7	430
	1.375	3	11.75	1114T-17-13	458
	1.875	3.5	12.75	1114T-17-17	486
2.375	1.375	3	12.25	1114T-23-13	480
	1.875	3.5	13.25	1114T-23-17	508
	2.375	3.5	13.75	1114T-23-23	529
2.875	1.375	3	12.75	1114T-27-13	501
	1.875	3.5	13.75	1114T-27-17	529
	2.375	3.5	14.25	1114T-27-23	551
3.375	1.875	3.5	14.25	1114T-33-17	551
	2.375	4	15.25	1114T-33-23	579
	2.875	4	15.75	1114T-33-27	601
3.875	1.875	3.5	14.75	1114T-37-17	573
	2.375	4	15.75	1114T-37-23	601
	2.875	4	16.25	1114T-37-27	622
4.875	2.375	4	16.75	1114T-47-23	644
	2.875	4	17.25	1114T-47-27	665
	3.375	4.5	18.25	1114T-47-33	694
5.875	2.875	4	18.25	1114T-57-27	709
	3.875	4.5	19.75	1114T-57-37	758
	4.875	4.5	20.75	1114T-57-47	802

X-1 = 1.375				10.875 × 23.5"	
X-2	B	C	H	ITEM NUMBER	NET WT.
1.875	1.375	3	12.25	1123T-17-13	805
	1.875	3.5	13.25	1123T-17-17	852
	2.375	3.5	13.75	1123T-17-23	888
2.375	1.375	3	12.75	1123T-23-13	841
	1.875	3.5	13.75	1123T-23-17	888
	2.375	3.5	14.25	1123T-23-23	924
2.875	1.375	3	13.25	1123T-27-13	877
	1.875	3.5	14.25	1123T-27-17	924
	2.375	3.5	14.75	1123T-27-23	961
3.375	1.875	3.5	14.75	1123T-33-17	961
	2.375	4	15.75	1123T-33-23	1008
	2.875	4	16.25	1123T-33-27	1044
3.875	1.875	3.5	15.25	1123T-37-17	997
	2.375	4	16.25	1123T-37-23	1044
	2.875	4	16.75	1123T-37-27	1080
4.875	2.375	4	17.25	1123T-47-23	1117
	2.875	4	17.75	1123T-47-27	1153
	3.375	4.5	18.75	1123T-47-33	1200
5.875	2.875	4	18.75	1123T-57-27	1225
	3.875	4.5	20.25	1123T-57-37	1309
	4.875	4.5	21.25	1123T-57-47	1381

WHEN ORDERING, PLEASE SPECIFY:

1. Quantity & Item Number
2. No. 1, No. 2, No. 3 or No. 7 Steel
3. Locating Ring Item Number
4. E, O and R Dimensions
5. L Dimension (Leader Pin Length)
6. Method of Shipment

11⅞" T-Series Mold Bases

X-1 = 0.875				11.875 × 12"	
X-2	B	C	H	ITEM NUMBER	NET WT.
1.875	0.875	3	11.25	1212T-17-7	411
	1.375	3	11.75	1212T-17-13	431
	1.875	3	12.25	1212T-17-17	451
2.375	1.375	3.5	12.75	1212T-23-13	457
	1.875	3.5	13.25	1212T-23-17	477
	2.375	3.5	13.75	1212T-23-23	497
2.875	1.375	3.5	13.25	1212T-27-13	477
	1.875	3.5	13.75	1212T-27-17	497
	2.375	3.5	14.25	1212T-27-23	518
3.375	1.875	3.5	14.25	1212T-33-17	518
	2.375	4	15.25	1212T-33-23	543
	2.875	4	15.75	1212T-33-27	564
3.875	1.875	4	15.25	1212T-37-17	543
	2.375	4.5	16.25	1212T-37-23	569
	2.875	4.5	16.75	1212T-37-27	590
4.875	2.375	4.5	17.25	1212T-47-23	610
	2.875	4.5	17.75	1212T-47-27	630
	3.375	4.5	18.25	1212T-47-33	650
5.875	2.875	4.5	18.75	1212T-57-27	670
	3.875	4.5	19.75	1212T-57-37	711
	4.875	4.5	20.75	1212T-57-47	751

X-1 = 0.875				11.875 × 20"	
X-2	B	C	H	ITEM NUMBER	NET WT.
1.875	0.875	3	11.25	1220T-17-7	684
	1.375	3	11.75	1220T-17-13	718
	1.875	3	12.25	1220T-17-17	752
2.375	1.375	3.5	12.75	1220T-23-13	761
	1.875	3.5	13.25	1220T-23-17	795
	2.375	3.5	13.75	1220T-23-23	828
2.875	1.375	3.5	13.25	1220T-27-13	795
	1.875	3.5	13.75	1220T-27-17	828
	2.375	3.5	14.25	1220T-27-23	862
3.375	1.875	3.5	14.25	1220T-33-17	862
	2.375	4	15.25	1220T-33-23	905
	2.875	4	15.75	1220T-33-27	939
3.875	1.875	4	15.25	1220T-37-17	905
	2.375	4.5	16.25	1220T-37-23	949
	2.875	4.5	16.75	1220T-37-27	982
4.875	2.375	4.5	17.25	1220T-47-23	1016
	2.875	4.5	17.75	1220T-47-27	1049
	3.375	4.5	18.25	1220T-47-33	1083
5.875	2.875	4.5	18.75	1220T-57-27	1117
	3.875	4.5	19.75	1220T-57-37	1184
	4.875	4.5	20.75	1220T-57-47	1251

NO. 1 OR NO. 2 STEEL ASSEMBLIES

All plates above ejector housing are No. 1 or No. 2 Steel, respectively.

NO. 3 STEEL ASSEMBLIES

"X-1", "X-2" and "B" Plates are No. 3 Steel.

"A"-Clamping and Support Plates are No. 2 Steel.

NO. 7 STEEL ASSEMBLIES

Any or all plates available as requested.

NOTE: For 3-Plate Extension Bushings, see page 197.

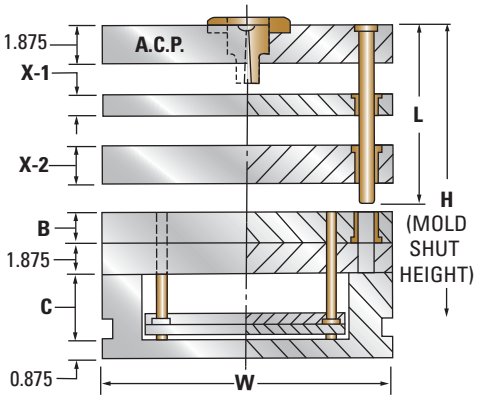

For detailed dimensions, see corresponding size "A" Series Mold Bases.

X-1 = 0.875				11.875 × 15"	
X-2	B	C	H	ITEM NUMBER	NET WT.
1.875	0.875	3	11.25	1215T-17-7	513
	1.375	3	11.75	1215T-17-13	539
	1.875	3	12.25	1215T-17-17	564
2.375	1.375	3.5	12.75	1215T-23-13	571
	1.875	3.5	13.25	1215T-23-17	596
	2.375	3.5	13.75	1215T-23-23	621
2.875	1.375	3.5	13.25	1215T-27-13	596
	1.875	3.5	13.75	1215T-27-17	621
	2.375	3.5	14.25	1215T-27-23	647
3.375	1.875	3.5	14.25	1215T-33-17	647
	2.375	4	15.25	1215T-33-23	679
	2.875	4	15.75	1215T-33-27	704
3.875	1.875	4	15.25	1215T-37-17	679
	2.375	4.5	16.25	1215T-37-23	711
	2.875	4.5	16.75	1215T-37-27	737
4.875	2.375	4.5	17.25	1215T-47-23	762
	2.875	4.5	17.75	1215T-47-27	787
	3.375	4.5	18.25	1215T-47-33	812
5.875	2.875	4.5	18.75	1215T-57-27	839
	3.875	4.5	19.75	1215T-57-37	888
	4.875	4.5	20.75	1215T-57-47	939

X-1 = 1.375				11.875 × 23.5"	
X-2	B	C	H	ITEM NUMBER	NET WT.
1.875	1.375	3	12.25	1223T-17-13	883
	1.875	3	12.75	1223T-17-17	923
	2.375	3.5	13.75	1223T-17-23	973
2.375	1.375	3.5	13.25	1223T-23-13	934
	1.875	3.5	13.75	1223T-23-17	973
	2.375	3.5	14.25	1223T-23-23	1013
2.875	1.375	3.5	13.75	1223T-27-13	973
	1.875	3.5	14.25	1223T-27-17	1013
	2.375	3.5	14.75	1223T-27-23	1052
3.375	1.875	3.5	14.75	1223T-33-17	1052
	2.375	4	15.75	1223T-33-23	1103
	2.875	4	16.25	1223T-33-27	1143
3.875	1.875	4	15.75	1223T-37-17	1103
	2.375	4.5	16.75	1223T-37-23	1154
	2.875	4.5	17.25	1223T-37-27	1193
4.875	2.375	4.5	17.75	1223T-47-23	1233
	2.875	4.5	18.25	1223T-47-27	1272
	3.375	4.5	18.75	1223T-47-33	1312
5.875	2.875	4.5	19.25	1223T-57-27	1352
	3.875	4.5	20.25	1223T-57-37	1431
	4.875	4.5	21.25	1223T-57-47	1510

WHEN ORDERING, PLEASE SPECIFY:

1. Quantity & Item Number
2. No. 1, No. 2, No. 3 or No. 7 Steel
3. Locating Ring Item Number
4. E, O and R Dimensions
5. L Dimension (Leader Pin Length)
6. Method of Shipment

13⅜" T-Series Mold Bases

NO. 1 OR NO. 2 STEEL ASSEMBLIES

All plates above ejector housing are No. 1 or No. 2 Steel, respectively.

NO. 3 STEEL ASSEMBLIES

"X-1", "X-2", and "B" Plates are No. 3 Steel. "A" -Clamping and Support Plates are No. 2 Steel.

NO. 7 STEEL ASSEMBLIES

Any or all plates available as requested.

X-1 = 0.875				13.375 × 15"	
X-2	B	C	H	ITEM NUMBER	NET WT.
1.875	0.875	3	11.25	1315T-17-7	584
	1.375	3	11.75	1315T-17-13	612
	1.875	3	12.25	1315T-17-17	640
2.375	1.375	3.5	12.75	1315T-23-13	648
	1.875	3.5	13.25	1315T-23-17	677
	2.375	3.5	13.75	1315T-23-23	705
2.875	1.375	3.5	13.25	1315T-27-13	677
	1.875	3.5	13.75	1315T-27-17	705
	2.375	3.5	14.25	1315T-27-23	734
3.375	1.875	3.5	14.25	1315T-33-17	734
	2.375	4	15.25	1315T-33-23	770
	2.875	4	15.75	1315T-33-27	798
3.875	1.875	4	15.25	1315T-37-17	770
	2.375	4.5	16.25	1315T-37-23	806
	2.875	4.5	16.75	1315T-37-27	835
4.875	2.375	4.5	17.25	1315T-47-23	863
	2.875	4.5	17.75	1315T-47-27	892
	3.375	4.5	18.25	1315T-47-33	920
5.875	2.875	4.5	18.75	1315T-57-27	949
	3.875	4.5	19.75	1315T-57-37	1005
	4.875	4.5	20.75	1315T-57-47	1062

X-1 = 0.875				13.375 × 20.75"	
X-2	B	C	H	ITEM NUMBER	NET WT.
1.875	0.875	3	11.25	1321T-17-7	807
	1.375	3	11.75	1321T-17-13	846
	1.875	3	12.25	1321T-17-17	886
2.375	1.375	3.5	12.75	1321T-23-13	897
	1.875	3.5	13.25	1321T-23-17	936
	2.375	3.5	13.75	1321T-23-23	975
2.875	1.375	3.5	13.25	1321T-27-13	936
	1.875	3.5	13.75	1321T-27-17	975
	2.375	3.5	14.25	1321T-27-23	1015
3.375	1.875	3.5	14.25	1321T-33-17	1015
	2.375	4	15.25	1321T-33-23	1065
	2.875	4	15.75	1321T-33-27	1104
3.875	1.875	4	15.25	1321T-37-17	1065
	2.375	4.5	16.25	1321T-37-23	1115
	2.875	4.5	16.75	1321T-37-27	1155
4.875	2.375	4.5	17.25	1321T-47-23	1194
	2.875	4.5	17.75	1321T-47-27	1233
	3.375	4.5	18.25	1321T-47-33	1272
5.875	2.875	4.5	18.75	1321T-57-27	1312
	3.875	4.5	19.75	1321T-57-37	1390
	4.875	4.5	20.75	1321T-57-47	1469

X-1 = 1.375				13.375 × 26"	
X-2	B	C	H	ITEM NUMBER	NET WT.
1.875	1.375	3	12.25	1326T-17-13	1110
	1.875	3	12.75	1326T-17-17	1159
	2.375	3.5	13.75	1326T-17-23	1222
2.375	1.375	3.5	13.25	1326T-23-13	1173
	1.875	3.5	13.75	1326T-23-17	1222
	2.375	3.5	14.25	1326T-23-23	1271
2.875	1.375	3.5	13.75	1326T-27-13	1222
	1.875	3.5	14.25	1326T-27-17	1271
	2.375	3.5	14.75	1326T-27-23	1320
3.375	1.875	3.5	14.75	1326T-33-17	1320
	2.375	4	15.75	1326T-33-23	1384
	2.875	4	16.25	1326T-33-27	1433
3.875	1.875	4	15.75	1326T-37-17	1384
	2.375	4.5	16.75	1326T-37-23	1447
	2.875	4.5	17.25	1326T-37-27	1496
4.875	2.375	4.5	17.75	1326T-47-23	1545
	2.875	4.5	18.25	1326T-47-27	1594
	3.375	4.5	18.75	1326T-47-33	1644
5.875	2.875	4.5	19.25	1326T-57-27	1693
	3.875	4.5	20.25	1326T-57-37	1791
	4.875	4.5	21.25	1326T-57-47	1890

X-1 = 0.875				13.375 × 18"	
X-2	B	C	H	ITEM NUMBER	NET WT.
1.875	0.875	3	11.25	1318T-17-7	700
	1.375	3	11.75	1318T-17-13	734
	1.875	3	12.25	1318T-17-17	768
2.375	1.375	3.5	12.75	1318T-23-13	778
	1.875	3.5	13.25	1318T-23-17	812
	2.375	3.5	13.75	1318T-23-23	846
2.875	1.375	3.5	13.25	1318T-27-13	812
	1.875	3.5	13.75	1318T-27-17	846
	2.375	3.5	14.25	1318T-27-23	880
3.375	1.875	3.5	14.25	1318T-33-17	880
	2.375	4	15.25	1318T-33-23	924
	2.875	4	15.75	1318T-33-27	958
3.875	1.875	4	15.25	1318T-37-17	924
	2.375	4.5	16.25	1318T-37-23	968
	2.875	4.5	16.75	1318T-37-27	1002
4.875	2.375	4.5	17.25	1318T-47-23	1036
	2.875	4.5	17.75	1318T-47-27	1070
	3.375	4.5	18.25	1318T-47-33	1104
5.875	2.875	4.5	18.75	1318T-57-27	1138
	3.875	4.5	19.75	1318T-57-37	1206
	4.875	4.5	20.75	1318T-57-47	1274

X-1 = 1.375				13.375 × 23.5	
X-2	B	C	H	ITEM NUMBER	NET WT.
1.875	1.375	3	12.25	1323T-17-13	1003
	1.875	3	12.75	1323T-17-17	1047
	2.375	3.5	13.75	1323T-17-23	1104
2.375	1.375	3.5	13.25	1323T-23-13	1060
	1.875	3.5	13.75	1323T-23-17	1104
	2.375	3.5	14.25	1323T-23-23	1149
2.875	1.375	3.5	13.75	1323T-27-13	1104
	1.875	3.5	14.25	1323T-27-17	1149
	2.375	3.5	14.75	1323T-27-23	1194
3.375	1.875	3.5	14.75	1323T-33-17	1194
	2.375	4	15.75	1323T-33-23	1251
	2.875	4	16.25	1323T-33-27	1295
3.875	1.875	4	15.75	1323T-37-17	1251
	2.375	4.5	16.75	1323T-37-23	1308
	2.875	4.5	17.25	1323T-37-27	1352
4.875	2.375	4.5	17.75	1323T-47-23	1397
	2.875	4.5	18.25	1323T-47-27	1441
	3.375	4.5	18.75	1323T-47-33	1486
5.875	2.875	4.5	19.25	1323T-57-27	1530
	3.875	4.5	20.25	1323T-57-37	1619
	4.875	4.5	21.25	1323T-57-47	1708

X-1 = 1.375				13.375 × 29.5	
X-2	B	C	H	ITEM NUMBER	NET WT.
1.875	1.375	3	12.25	1329T-17-13	1259
	1.875	3	12.75	1329T-17-17	1315
	2.375	3.5	13.75	1329T-17-23	1386
2.375	1.375	3.5	13.25	1329T-23-13	1330
	1.875	3.5	13.75	1329T-23-17	1386
	2.375	3.5	14.25	1329T-23-23	1442
2.875	1.375	3.5	13.75	1329T-27-13	1386
	1.875	3.5	14.25	1329T-27-17	1442
	2.375	3.5	14.75	1329T-27-23	1498
3.375	1.875	3.5	14.75	1329T-33-17	1498
	2.375	4	15.75	1329T-33-23	1570
	2.875	4	16.25	1329T-33-27	1626
3.875	1.875	4	15.75	1329T-37-17	1570
	2.375	4.5	16.75	1329T-37-23	1641
	2.875	4.5	17.25	1329T-37-27	1697
4.875	2.375	4.5	17.75	1329T-47-23	1753
	2.875	4.5	18.25	1329T-47-27	1809
	3.375	4.5	18.75	1329T-47-33	1865
5.875	2.875	4.5	19.25	1329T-57-27	1921
	3.875	4.5	20.25	1329T-57-37	2032
	4.875	4.5	21.25	1329T-57-47	2145

For detailed dimensions, see corresponding size "A" Series Mold Bases.

WHEN ORDERING, PLEASE SPECIFY:

1. Quantity & Item Number
2. No. 1, No. 2, No. 3, or No. 7 Steel
3. Locating Ring Item Number
4. E, O and R Dimension
5. L Dimension (Leader Pin Length)
6. Method of Shipment

NOTE: For 3-Plate Extension Bushings, see page 197.

14⅞" T-Series Mold Bases

NO. 1 OR NO. 2 STEEL ASSEMBLIES

All plates above ejector housing are No. 1 or No. 2 Steel, respectively.

NO. 3 STEEL ASSEMBLIES

"X-1", "X-2" and "B" Plates are No. 3 Steel.

"A" - Clamping and Support Plates are No. 2 Steel.

NO. 7 STEEL ASSEMBLIES

Any or all plates available as requested.

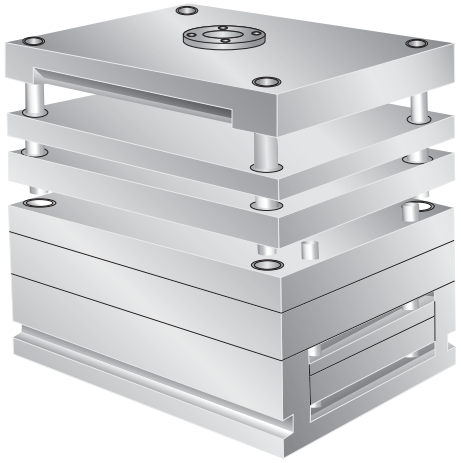

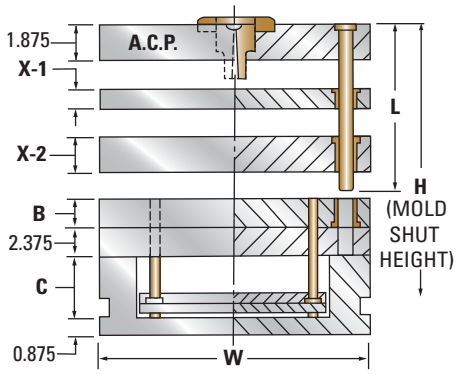

For detailed dimensions, see corresponding size "A" Series Mold Bases.

X-1 = 0.875				14.875 × 17.875	
X-2	B	C	H	ITEM NUMBER	NET WT.
1.875	1.375	3	12.25	1518T-17-13	847
	1.875	3.5	13.25	1518T-17-17	894
	2.375	3.5	13.75	1518T-17-23	931
2.375	1.375	3.5	13.25	1518T-23-13	894
	1.875	3.5	13.75	1518T-23-17	931
	2.375	3.5	14.25	1518T-23-23	969
2.875	1.375	3.5	13.75	1518T-27-13	931
	1.875	3.5	14.25	1518T-27-17	969
	2.375	3.5	14.75	1518T-27-23	1007
3.375	1.875	4	15.25	1518T-33-17	1016
	2.375	4	15.75	1518T-33-23	1054
	2.875	4.5	16.75	1518T-33-27	1101
3.875	1.875	4	15.75	1518T-37-17	1054
	2.375	4.5	16.75	1518T-37-23	1101
	2.875	4.5	17.25	1518T-37-27	1139
4.875	2.375	4.5	17.75	1518T-47-23	1176
	2.875	4.5	18.25	1518T-47-27	1214
	3.375	4.5	18.75	1518T-47-33	1252
5.875	2.875	4.5	19.25	1518T-57-27	1289
	3.875	4.5	20.25	1518T-57-37	1365
	4.875	4.5	21.25	1518T-57-47	1440

X-1 = 1.375				14.875 × 23.75	
X-2	B	C	H	ITEM NUMBER	NET WT.
1.875	1.375	3	12.75	1524T-17-13	1175
	1.875	3.5	13.75	1524T-17-17	1237
	2.375	3.5	14.25	1524T-17-23	1287
2.375	1.375	3.5	13.75	1524T-23-13	1237
	1.875	3.5	14.25	1524T-23-17	1287
	2.375	3.5	14.75	1524T-23-23	1337
2.875	1.375	3.5	14.25	1524T-27-13	1287
	1.875	3.5	14.75	1524T-27-17	1337
	2.375	3.5	15.25	1524T-27-23	1387
3.375	1.875	4	15.75	1524T-33-17	1400
	2.375	4	16.25	1524T-33-23	1450
	2.875	4.5	17.25	1524T-33-27	1513
3.875	1.875	4	16.25	1524T-37-17	1450
	2.375	4.5	17.25	1524T-37-23	1513
	2.875	4.5	17.75	1524T-37-27	1563
4.875	2.375	4.5	18.25	1524T-47-23	1613
	2.875	4.5	18.75	1524T-47-27	1663
	3.375	4.5	19.25	1524T-47-33	1713
5.875	2.875	4.5	19.75	1524T-57-27	1763
	3.875	4.5	20.75	1524T-57-37	1863
	4.875	4.5	21.75	1524T-57-47	1963

X-1 = 1.375				14.875 × 29.5	
X-2	B	C	H	ITEM NUMBER	NET WT.
1.875	1.375	3	12.75	1529T-17-13	1459
	1.875	3.5	13.75	1529T-17-17	1537
	2.375	3.5	14.25	1529T-17-23	1599
2.375	1.375	3.5	13.75	1529T-23-13	1537
	1.875	3.5	14.25	1529T-23-17	1599
	2.375	3.5	14.75	1529T-23-23	1661
2.875	1.375	3.5	14.25	1529T-27-13	1599
	1.875	3.5	14.75	1529T-27-17	1661
	2.375	3.5	15.25	1529T-27-23	1723
3.375	1.875	4	15.75	1529T-33-17	1739
	2.375	4	16.25	1529T-33-23	1801
	2.875	4.5	17.25	1529T-33-27	1879
3.875	1.875	4	16.25	1529T-37-17	1801
	2.375	4.5	17.25	1529T-37-23	1879
	2.875	4.5	17.75	1529T-37-27	1941
4.875	2.375	4.5	18.25	1529T-47-23	2003
	2.875	4.5	18.75	1529T-47-27	2065
	3.375	4.5	19.25	1529T-47-33	2128
5.875	2.875	4.5	19.75	1529T-57-27	2190
	3.875	4.5	20.75	1529T-57-37	2314
	4.875	4.5	21.75	1529T-57-47	2438

WHEN ORDERING, PLEASE SPECIFY:

1. Quantity & Item Number
2. No. 1, No. 2, No. 3, or No. 7 Steel
3. Locating Ring Item Number
4. E, O and R Dimensions
5. L Dimension (Leader Pin Length)
6. Method of Shipment

NOTE: For 3-Plate Extension Bushings, see page 197.

15⅞" T-Series Mold Bases

NO. 1 OR NO. 2 STEEL ASSEMBLIES
All plates above ejector housing are No. 1 or No. 2 Steel, respectively.

NO. 3 STEEL ASSEMBLIES
"X-1", "X-2", and "B" Plates are No. 3 Steel.
"A" - Clamping and Support Plates are No. 2 Steel.

NO. 7 STEEL ASSEMBLIES
Any or all plates available as requested.

X-1 = 0.875				15.875 × 16"	
X-2	B	C	H	ITEM NUMBER	NET WT.
1.875	1.375	3	12.25	1616T-17-13	808
	1.875	3.5	13.25	1616T-17-17	852
	2.375	3.5	13.75	1616T-17-23	888
2.375	1.375	3.5	13.25	1616T-23-13	852
	1.875	3.5	13.75	1616T-23-17	888
	2.375	3.5	14.25	1616T-23-23	924
2.875	1.375	3.5	13.75	1616T-27-13	888
	1.875	3.5	14.25	1616T-27-17	924
	2.375	3.5	14.75	1616T-27-23	960
3.375	1.875	4	15.25	1616T-33-17	969
	2.375	4	15.75	1616T-33-23	1005
	2.875	4.5	16.75	1616T-33-27	1049
3.875	1.875	4	15.75	1616T-37-17	1005
	2.375	4.5	16.75	1616T-37-23	1049
	2.875	4.5	17.25	1616T-37-27	1085
4.875	2.375	4.5	17.75	1616T-47-23	1121
	2.875	4.5	18.25	1616T-47-27	1157
	3.375	4.5	18.75	1616T-47-33	1193
5.875	2.875	4.5	19.25	1616T-57- 27	1229
	3.875	4.5	20.25	1616T-57-37	1301
	4.875	4.5	21.25	1616T-57-47	1373

X-1 = 1.375				15.875 × 23.5	
X-2	B	C	H	ITEM NUMBER	NET WT.
1.875	1.375	3	12.75	1623T-17-13	1239
	1.875	3.5	13.75	1623T-17-17	1304
	2.375	3.5	14.25	1623T-17-23	1357
2.375	1.375	3.5	13.75	1623T-23-13	1304
	1.875	3.5	14.25	1623T-23-17	1357
	2.375	3.5	14.75	1623T-23-23	1410
2.875	1.375	3.5	14.25	1623T-27-13	1357
	1.875	3.5	14.75	1623T-27-17	1410
	2.375	3.5	15.25	1623T-27-23	1463
3.375	1.875	4	15.75	1623T-33-17	1475
	2.375	4	16.25	1623T-33-23	1528
	2.875	4.5	17.25	1623T-33-27	1593
3.875	1.875	4	16.25	1623T-37-17	1528
	2.375	4.5	17.25	1623T-37-23	1593
	2.875	4.5	17.75	1623T-37-27	1646
4.875	2.375	4.5	18.25	1623T-47-23	1699
	2.875	4.5	18.75	1623T-47-27	1752
	3.375	4.5	19.25	1623T-47-33	1805
5.875	2.875	4.5	19.75	1623T-57-27	1858
	3.875	4.5	20.75	1623T-57-37	1963
	4.875	4.5	21.75	1623T-57-47	2069

X-1 = 1.375				15.875 × 29.5	
X-2	B	C	H	ITEM NUMBER	NET WT.
1.875	1.375	3	12.75	1629T-17-13	1555
	1.875	3.5	13.75	1629T-17-17	1637
	2.375	3.5	14.25	1629T-17-23	1703
2.375	1.375	3.5	13.75	1629T-23-13	1637
	1.875	3.5	14.25	1629T-23-17	1703
	2.375	3.5	14.75	1629T-23-23	1770
2.875	1.375	3.5	14.25	1629T-27-13	1703
	1.875	3.5	14.75	1629T-27-17	1770
	2.375	3.5	15.25	1629T-27-23	1836
3.375	1.875	4	15.75	1629T-33-17	1852
	2.375	4	16.25	1629T-33-23	1918
	2.875	4.5	17.25	1629T-33-27	2000
3.875	1.875	4	16.25	1629T-37-17	1918
	2.375	4.5	17.25	1629T-37-23	2000
	2.875	4.5	17.75	1629T-37-27	2066
4.875	2.375	4.5	18.25	1629T-47-23	2133
	2.875	4.5	18.75	1629T-47-27	2199
	3.375	4.5	19.25	1629T-47-33	2266
5.875	2.875	4.5	19.75	1629T-57-27	2332
	3.875	4.5	20.75	1629T-57-37	2465
	4.875	4.5	21.75	1629T-57-47	2597

X-1 = 0.875				15.875 × 20"	
X-2	B	C	H	ITEM NUMBER	NET WT.
1.875	1.375	3	12.25	1620T-17-13	1009
	1.875	3.5	13.25	1620T-17-17	1065
	2.375	3.5	13.75	1620T-17-23	1110
2.375	1.375	3.5	13.25	1620T-23-13	1065
	1.875	3.5	13.75	1620T-23-17	1110
	2.375	3.5	14.25	1620T-23-23	1155
2.875	1.375	3.5	13.75	1620T-27-13	1110
	1.875	3.5	14.25	1620T-27-17	1155
	2.375	3.5	14.75	1620T-27-23	1200
3.375	1.875	4	15.25	1620T-33-17	1211
	2.375	4	15.75	1620T-33-23	1256
	2.875	4.5	16.75	1620T-33-27	1311
3.875	1.875	4	15.75	1620T-37-17	1256
	2.375	4.5	16.75	1620T-37-23	1311
	2.875	4.5	17.25	1620T-37-27	1356
4.875	2.375	4.5	17.75	1620T-47-23	1401
	2.875	4.5	18.25	1620T-47-27	1446
	3.375	4.5	18.75	1620T-47-33	1491
5.875	2.875	4.5	19.25	1620T-57-27	1536
	3.875	4.5	20.25	1620T-57-37	1626
	4.875	4.5	21.25	1620T-57-47	1716

X-1 = 1.375				15.875 × 26"	
X-2	B	C	H	ITEM NUMBER	NET WT.
1.875	1.375	3	12.75	1626T-17-13	1371
	1.875	3.5	13.75	1626T-17-17	1443
	2.375	3.5	14.25	1626T-17-23	1501
2.375	1.375	3.5	13.75	1626T-23-13	1443
	1.875	3.5	14.25	1626T-23-17	1501
	2.375	3.5	14.75	1626T-23-23	1560
2.875	1.375	3.5	14.25	1626T-27-13	1501
	1.875	3.5	14.75	1626T-27-17	1560
	2.375	3.5	15.25	1626T-27-23	1618
3.375	1.875	4	15.75	1626T-33-17	1632
	2.375	4	16.25	1626T-33-23	1691
	2.875	4.5	17.25	1626T-33-27	1763
3.875	1.875	4	16.25	1626T-37-17	1691
	2.375	4.5	17.25	1626T-37-23	1763
	2.875	4.5	17.75	1626T-37-27	1821
4.875	2.375	4.5	18.25	1626T-47-23	1880
	2.875	4.5	18.75	1626T-47-27	1938
	3.375	4.5	19.25	1626T-47-33	1997
5.875	2.875	4.5	19.75	1626T-57-27	2055
	3.875	4.5	20.75	1626T-57-37	2172
	4.875	4.5	21.75	1626T-57-47	2289

X-1 = 1.375				15.875 × 35.5	
X-2	B	C	H	ITEM NUMBER	NET WT.
1.875	1.375	3	12.75	1635T-17-13	1871
	1.875	3.5	13.75	1635T-17-17	1970
	2.375	3.5	14.25	1635T-17-23	2050
2.375	1.375	3.5	13.75	1635T-23-13	1970
	1.875	3.5	14.25	1635T-23-17	2050
	2.375	3.5	14.75	1635T-23-23	2130
2.875	1.375	3.5	14.25	1635T-27-13	2050
	1.875	3.5	14.75	1635T-27-17	2130
	2.375	3.5	15.25	1635T-27-23	2209
3.375	1.875	4	15.75	1635T-33-17	2228
	2.375	4	16.25	1635T-33-23	2308
	2.875	4.5	17.25	1635T-33-27	2407
3.875	1.875	4	16.25	1635T-37-17	2308
	2.375	4.5	17.25	1635T-37-23	2407
	2.875	4.5	17.75	1635T-37-27	2487
4.875	2.375	4.5	18.25	1635T-47-23	2566
	2.875	4.5	18.75	1635T-47-27	2646
	3.375	4.5	19.25	1635T-47-33	2726
5.875	2.875	4.5	19.75	1635T-57-27	2806
	3.875	4.5	20.75	1635T-57-37	2966
	4.875	4.5	21.75	1635T-57-47	3125

For detailed dimensions, see corresponding size "A" Series Mold Bases.

WHEN ORDERING, PLEASE SPECIFY:

1. Quantity & Item Number
2. No. 1, No. 2, No. 3, or No. 7 Steel
3. Locating Ring Item Number
4. E, O and R Dimensions
5. L Dimension (Leader Pin Length)
6. Method of Shipment

NOTE: For 3-Plate Extension Bushings, see page 197.

16½" T-Series Mold Bases

NO. 1 OR NO. 2 STEEL ASSEMBLIES

All plates above ejector housing are No. 1 or No. 2 Steel, respectively.

NO. 3 STEEL ASSEMBLIES

"X-1", "X-2" and "B" Plates are No. 3 Steel.

"A" - Clamping and Support Plates are No. 2 Steel.

NO. 7 STEEL ASSEMBLIES

Any or all plates available as requested.

X-1 = 1.375				16.5 × 23.75	
X-2	B	C	H	ITEM NUMBER	NET WT.
1.875	1.375	3	12.75	1724T-17-13	1300
	1.875	3.5	13.75	1724T-17-17	1369
	2.375	3.5	14.25	1724T-17-23	1424
2.375	1.375	3.5	13.75	1724T-23-13	1369
	1.875	3.5	14.25	1724T-23-17	1424
	2.375	3.5	14.75	1724T-23-23	1480
2.875	1.375	3.5	14.25	1724T-27-13	1424
	1.875	3.5	14.75	1724T-27-17	1480
	2.375	3.5	15.25	1724T-27-23	1535
3.375	1.875	4	15.75	1724T-33-17	1548
	2.375	4	16.25	1724T-33-23	1603
	2.875	4.5	17.25	1724T-33-27	1671
3.875	1.875	4	16.25	1724T-37-17	1603
	2.375	4.5	17.25	1724T-37-23	1671
	2.875	4.5	17.75	1724T-37-27	1727
4.875	2.375	4.5	18.25	1724T-47-23	1782
	2.875	4.5	18.75	1724T-47-27	1838
	3.375	4.5	19.25	1724T-47-33	1893
5.875	2.875	4.5	19.75	1724T-57-27	1949
	3.875	4.5	20.75	1724T-57-37	2060
	4.875	4.5	21.75	1724T-57-47	2171

X-1 = 1.375				16.5 × 29.5	
X-2	B	C	H	ITEM NUMBER	NET WT.
1.875	1.375	3	12.75	1729T-17-13	1615
	1.875	3.5	13.75	1729T-17-17	1700
	2.375	3.5	14.25	1729T-17-23	1769
2.375	1.375	3.5	13.75	1729T-23-13	1700
	1.875	3.5	14.25	1729T-23-17	1769
	2.375	3.5	14.75	1729T-23-23	1838
2.875	1.375	3.5	14.25	1729T-27-13	1769
	1.875	3.5	14.75	1729T-27-17	1838
	2.375	3.5	15.25	1729T-27-23	1907
3.375	1.875	4	15.75	1729T-33-17	1922
	2.375	4	16.25	1729T-33-23	1991
	2.875	4.5	17.25	1729T-33-27	2076
3.875	1.875	4	16.25	1729T-37-17	1991
	2.375	4.5	17.25	1729T-37-23	2076
	2.875	4.5	17.75	1729T-37-27	2145
4.875	2.375	4.5	18.25	1729T-47-23	2214
	2.875	4.5	18.75	1729T-47-27	2283
	3.375	4.5	19.25	1729T-47-33	2352
5.875	2.875	4.5	19.75	1729T-57-27	2421
	3.875	4.5	20.75	1729T-57-37	2559
	4.875	4.5	21.75	1729T-57-47	2696

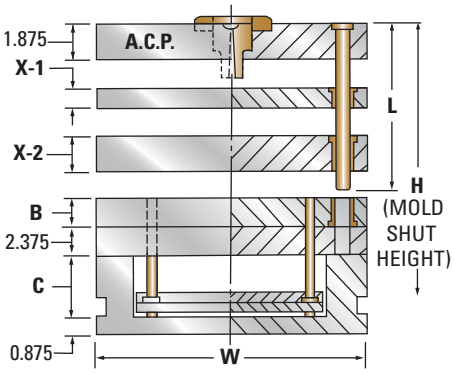

For detailed dimensions, see corresponding size "A" Series Mold Bases.

NOTE: For 3-Plate Extension Bushings, see page 197.

WHEN ORDERING, PLEASE SPECIFY:

1. Quantity & Item Number
2. No. 1, No. 2, No. 3, or No. 7 Steel
3. Locating Ring Item Number
4. E, O and R Dimensions
5. L Dimension (Leader Pin Length)
6. Method of Shipment

17⅞" T-Series Mold Bases

NO. 1 OR NO. 2 STEEL ASSEMBLIES
All plates above ejector housing are No. 1 or No. 2 Steel, respectively.

NO. 3 STEEL ASSEMBLIES
"X-1", "X-2", and "B" Plates are No. 3 Steel.
"A" - Clamping and Support Plates are No. 2 Steel.

NO. 7 STEEL ASSEMBLIES
Any or all plates available as requested.

X-1 = 1.375				17.875 × 18"	
X-2	B	C	H	ITEM NUMBER	NET WT.
1.875	1.375	3	12.75	1818T-17-13	1066
	1.875	3	13.25	1818T-17-17	1112
	2.375	3.5	14.25	1818T-17-23	1167
2.375	1.375	3.5	13.75	1818T-23-13	1122
	1.875	3.5	14.25	1818T-23-17	1167
	2.375	3.5	14.75	1818T-23-23	1213
2.875	1.375	3.5	14.25	1818T-27-13	1167
	1.875	3.5	14.75	1818T-27-17	1213
	2.375	3.5	15.25	1818T-27-23	1258
3.375	1.875	4	15.75	1818T-33-17	1268
	2.375	4	16.25	1818T-33-23	1313
	2.875	4.5	17.25	1818T-33-27	1369
3.875	1.875	4	16.25	1818T-37-17	1313
	2.375	4.5	17.25	1818T-37-23	1369
	2.875	4.5	17.75	1818T-37-27	1414
4.875	2.375	4.5	18.25	1818T-47-23	1460
	2.875	4.5	18.75	1818T-47-27	1505
	3.375	4.5	19.25	1818T-47-33	1551
5.875	2.875	4.5	19.75	1818T-57-27	1596
	3.875	4.5	20.75	1818T-57-37	1688
	4.875	4.5	21.75	1818T-57-47	1779

X-1 = 1.375				17.875 × 23.5	
X-2	B	C	H	ITEM NUMBER	NET WT.
1.875	1.375	3	12.75	1823T-17-13	1392
	1.875	3	13.25	1823T-17-17	1452
	2.375	3.5	14.25	1823T-17-23	1524
2.375	1.375	3.5	13.75	1823T-23-13	1464
	1.875	3.5	14.25	1823T-23-17	1524
	2.375	3.5	14.75	1823T-23-23	1583
2.875	1.375	3.5	14.25	1823T-27-13	1524
	1.875	3.5	14.75	1823T-27-17	1583
	2.375	3.5	15.25	1823T-27-23	1643
3.375	1.875	4	15.75	1823T-33-17	1655
	2.375	4	16.25	1823T-33-23	1714
	2.875	4.5	17.25	1823T-33-27	1786
3.875	1.875	4	16.25	1823T-37-17	1714
	2.375	4.5	17.25	1823T-37-23	1786
	2.875	4.5	17.75	1823T-37-27	1846
4.875	2.375	4.5	18.25	1823T-47-23	1905
	2.875	4.5	18.75	1823T-47-27	1965
	3.375	4.5	19.25	1823T-47-33	2024
5.875	2.875	4.5	19.75	1823T-57-27	2084
	3.875	4.5	20.75	1823T-57-37	2203
	4.875	4.5	21.75	1823T-57-47	2322

X-1 = 1.375				17.875 × 29.5	
X-2	B	C	H	ITEM NUMBER	NET WT.
1.875	1.375	3	12.75	1829T-17-13	1747
	1.875	3	13.25	1829T-17-17	1822
	2.375	3.5	14.25	1829T-17-23	1912
2.375	1.375	3.5	13.75	1829T-23-13	1838
	1.875	3.5	14.25	1829T-23-17	1912
	2.375	3.5	14.75	1829T-23-23	1987
2.875	1.375	3.5	14.25	1829T-27-13	1912
	1.875	3.5	14.75	1829T-27-17	1987
	2.375	3.5	15.25	1829T-27-23	2062
3.375	1.875	4	15.75	1829T-33-17	2077
	2.375	4	16.25	1829T-33-23	2152
	2.875	4.5	17.25	1829T-33-27	2242
3.875	1.875	4	16.25	1829T-37-17	2152
	2.375	4.5	17.25	1829T-37-23	2242
	2.875	4.5	17.75	1829T-37-27	2317
4.875	2.375	4.5	18.25	1829T-47-23	2392
	2.875	4.5	18.75	1829T-47-27	2466
	3.375	4.5	19.25	1829T-47-33	2541
5.875	2.875	4.5	19.75	1829T-57-27	2616
	3.875	4.5	20.75	1829T-57-37	2765
	4.875	4.5	21.75	1829T-57-47	2915

X-1 = 1.375				17.875 × 20"	
X-2	B	C	H	ITEM NUMBER	NET WT.
1.875	1.375	3	12.75	1820T-17-13	1185
	1.875	3	13.25	1820T-17-17	1235
	2.375	3.5	14.25	1820T-17-23	1297
2.375	1.375	3.5	13.75	1820T-23-13	1246
	1.875	3.5	14.25	1820T-23-17	1297
	2.375	3.5	14.75	1820T-23-23	1347
2.875	1.375	3.5	14.25	1820T-27-13	1297
	1.875	3.5	14.75	1820T-27-17	1347
	2.375	3.5	15.25	1820T-27-23	1398
3.375	1.875	4	15.75	1820T-33-17	1409
	2.375	4	16.25	1820T-33-23	1459
	2.875	4.5	17.25	1820T-33-27	1521
3.875	1.875	4	16.25	1820T-37-17	1459
	2.375	4.5	17.25	1820T-37-23	1521
	2.875	4.5	17.75	1820T-37-27	1571
4.875	2.375	4.5	18.25	1820T-47-23	1622
	2.875	4.5	18.75	1820T-47 -27	1672
	3.375	4.5	19.25	1820T-47-33	1723
5.875	2.875	4.5	19.75	1820T-57-27	1774
	3.875	4.5	20.75	1820T-57-37	1875
	4.875	4.5	21.75	1820T-57-47	1976

X-1 = 1.375				17.875 × 26"	
X-2	B	C	H	ITEM NUMBER	NET WT.
1.875	1.375	3	12.75	1826T-17-13	1540
	1.875	3	13.25	1826T-17-17	1606
	2.375	3.5	14.25	1826T-17-23	1686
2.375	1.375	3.5	13.75	1826T-23-13	1620
	1.875	3.5	14.25	1826T-23-17	1686
	2.375	3.5	14.75	1826T-23-23	1751
2.875	1.375	3.5	14.25	1826T-27-13	1686
	1.875	3.5	14.75	1826T-27-17	1751
	2.375	3.5	15.25	1826T-27-23	1817
3.375	1.875	4	15.75	1826T-33-17	1831
	2.375	4	16.25	1826T-33-23	1897
	2.875	4.5	17.25	1826T-33-27	1976
3.875	1.875	4	16.25	1826T-37-17	1897
	2.375	4.5	17.25	1826T-37-23	1976
	2.875	4.5	17.75	1826T-37-27	2042
4.875	2.375	4.5	18.25	1826T-47-23	2108
	2.875	4.5	18.75	1826T-47-27	2174
	3.375	4.5	19.25	1826T-47-33	2240
5.875	2.875	4.5	19.75	1826T-57-27	2306
	3.875	4.5	20.75	1826T-57-37	2437
	4.875	4.5	21.75	1826T-57-47	2569

X-1 = 1.375				17.875 × 35.5	
X-2	B	C	H	ITEM NUMBER	NET WT.
1.875	1.375	3	12.75	1835T-17-13	2103
	1.875	3	13.25	1835T-17-17	2193
	2.375	3.5	14.25	1835T-17-23	2301
2.375	1.375	3.5	13.75	1835T-23-13	2211
	1.875	3.5	14.25	1835T-23-17	2301
	2.375	3.5	14.75	1835T-23-23	2391
2.875	1.375	3.5	14.25	1835T-27-13	2301
	1.875	3.5	14.75	1835T-27-17	2391
	2.375	3.5	15.25	1835T-27-23	2481
3.375	1.875	4	15.75	1835T-33-17	2500
	2.375	4	16.25	1835T-33-23	2590
	2.875	4.5	17.25	1835T-33-27	2699
3.875	1.875	4	16.25	1835T-37-17	2590
	2.375	4.5	17.25	1835T-37-23	2699
	2.875	4.5	17.75	1835T-37-27	2788
4.875	2.375	4.5	18.25	1835T-47-23	2878
	2.875	4.5	18.75	1835T-47-27	2968
	3.375	4.5	19.25	1835T-47-33	3058
5.875	2.875	4.5	19.75	1835T-57-27	3148
	3.875	4.5	20.75	1835T-57-37	3328
	4.875	4.5	21.75	1835T-57-47	3508

For detailed dimensions, see corresponding size "A" Series Mold Bases.

WHEN ORDERING, PLEASE SPECIFY:

1. Quantity & Item Number
2. No. 1, No. 2, No. 3, or No. 7 Steel
3. Locating Ring Item Number
4. E, O and R Dimensions
5. L Dimension (Leader Pin Length)
6. Method of Shipment

NOTE: For 3-Plate Extension Bushings, see page 197.

19½" T-Series Mold Bases

NO. 1 OR NO. 2 STEEL ASSEMBLIES

All plates above ejector housing are No. 1 or No. 2 Steel, respectively.

NO. 3 STEEL ASSEMBLIES

"X-1", "X-2" and "B" Plates are No. 3 Steel.

"A" - Clamping and Support Plates are No. 2 Steel.

NO. 7 STEEL ASSEMBLIES

Any or all plates available as requested.

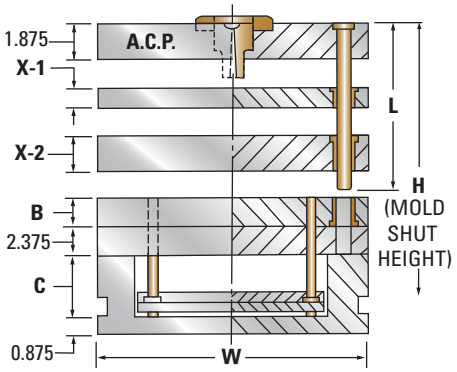

For detailed dimensions, see corresponding size "A" Series Mold Bases.

X-1 = 1.375				19.5 × 23.75	
X-2	B	C	H	ITEM NUMBER	NET WT.
1.875	1.375	3	12.75	1924T-17-13	1533
	1.875	3	13.25	1924T-17-17	1598
	2.375	3.5	14.25	1924T-17-23	1676
2.375	1.375	3.5	13.75	1924T-23-13	1611
	1.875	3.5	14.25	1924T-23-17	1676
	2.375	3.5	14.75	1924T-23-23	1742
2.875	1.375	3.5	14.25	1924T-27-13	1676
	1.875	3.5	14.75	1924T-27-17	1742
	2.375	3.5	15.25	1924T-27-23	1808
3.375	1.875	4	15.75	1924T-33-17	1820
	2.375	4	16.25	1924T-33-23	1886
	2.875	4.5	17.25	1924T-33-27	1964
3.875	1.875	4	16.25	1924T-37-17	1886
	2.375	4.5	17.25	1924T-37-23	1964
	2.875	4.5	17.75	1924T-37-27	2030
4.875	2.375	4.5	18.25	1924T-47-23	2095
	2.875	4.5	18.75	1924T-47-27	2161
	3.375	4.5	19.25	1924T-47-33	2226
5.875	2.875	4.5	19.75	1924T-57-27	2292
	3.875	4.5	20.75	1924T-57-37	2423
	4.875	4.5	21.75	1924T-57-47	2554

X-1 = 1.375				19.5 × 29.5	
X-2	B	C	H	ITEM NUMBER	NET WT.
1.875	1.375	3	12.75	1929T-17-13	1903
	1.875	3	13.25	1929T-17-17	1985
	2.375	3.5	14.25	1929T-17-23	2082
2.375	1.375	3.5	13.75	1929T-23-13	2001
	1.875	3.5	14.25	1929T-23-17	2082
	2.375	3.5	14.75	1929T-23-23	2164
2.875	1.375	3.5	14.25	1929T-27-13	2082
	1.875	3.5	14.75	1929T-27-17	2164
	2.375	3.5	15.25	1929T-27-23	2245
3.375	1.875	4	15.75	1929T-33-17	2261
	2.375	4	16.25	1929T-33-23	2342
	2.875	4.5	17.25	1929T-33-27	2439
3.875	1.875	4	16.25	1929T-37-17	2342
	2.375	4.5	17.25	1929T-37-23	2439
	2.875	4.5	17.75	1929T-37-27	2521
4.875	2.375	4.5	18.25	1929T-47-23	2602
	2.875	4.5	18.75	1929T-47-27	2684
	3.375	4.5	19.25	1929T-47-33	2765
5.875	2.875	4.5	19.75	1929T-57-27	2847
	3.875	4.5	20.75	1929T-57-37	3010
	4.875	4.5	21.75	1929T-57-47	3173

X-1 = 1.375				19.5 × 35.5	
X-2	B	C	H	ITEM NUMBER	NET WT.
1.875	1.375	3	12.75	1935T-17-13	2291
	1.875	3	13.25	1935T-17-17	2389
	2.375	3.5	14.25	1935T-17-23	2506
2.375	1.375	3.5	13.75	1935T-23-13	2408
	1.875	3.5	14.25	1935T-23-17	2506
	2.375	3.5	14.75	1935T-23-23	2604
2.875	1.375	3.5	14.25	1935T-27-13	2506
	1.875	3.5	14.75	1935T-27-17	2604
	2.375	3.5	15.25	1935T-27-23	2702
3.375	1.875	4	15.75	1935T-33-17	2721
	2.375	4	16.25	1935T-33-23	2819
	2.875	4.5	17.25	1935T-33-27	2936
3.875	1.875	4	16.25	1935T-37-17	2819
	2.375	4.5	17.25	1935T-37-23	2936
	2.875	4.5	17.75	1935T-37-27	3034
4.875	2.375	4.5	18.25	1935T-47-23	3132
	2.875	4.5	18.75	1935T-47-27	3230
	3.375	4.5	19.25	1935T-47-33	3328
5.875	2.875	4.5	19.75	1935T-57-27	3426
	3.875	4.5	20.75	1935T-57-37	3622
	4.875	4.5	21.75	1935T-57-47	3818

WHEN ORDERING, PLEASE SPECIFY:

1. Quantity & Item Number
2. No. 1, No. 2, No. 3, or No. 7 Steel
3. Locating Ring Item Number
4. E, O and R Dimensions
5. L Dimension (Leader Pin Length)
6. Method of Shipment

NOTE: For 3-Plate Extension Bushings, see page 197.

23¾" T-Series Mold Bases

NO. 1 OR NO. 2 STEEL ASSEMBLIES

All plates above ejector housing are No. 1 or No. 2 Steel, respectively.

NO. 3 STEEL ASSEMBLIES

"X-1", "X-2" and "B" Plates are No. 3 Steel.

"A" - Clamping and Support Plates are No. 2 Steel

NO. 7 STEEL ASSEMBLIES

Any or all plates available as requested.

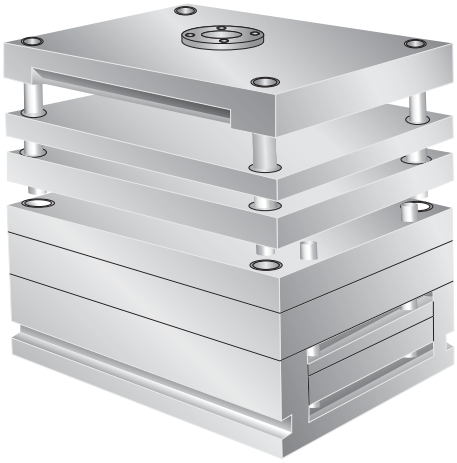

For detailed dimensions, see corresponding size "A" Series Mold Bases.

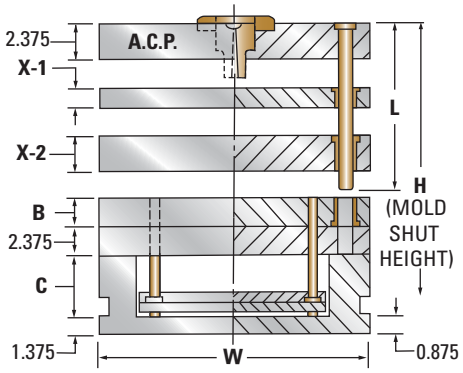

NOTE: Clamp slots for 23.75" wide bases will be type B, not type D as shown in photo.

X-1 = 1.375				23.75 × 23.75	
X-2	B	C	H	ITEM NUMBER	NET WT.
1.875	1.375	3	13.75	2424T-17-13	2021
	1.875	3	14.25	2424T-17-17	2101
	2.375	3.5	15.25	2424T-17-23	2194
2.375	1.375	3.5	14.75	2424T-23-13	2114
	1.875	3.5	15.25	2424T-23-17	2194
	2.375	3.5	15.75	2424T-23-23	2274
2.875	1.375	3.5	15.25	2424T-27-13	2194
	1.875	3.5	15.75	2424T-27-17	2274
	2.375	3.5	16.25	2424T-27-23	2353
3.375	1.875	4	16.75	2424T-33-17	2366
	2.375	4	17.25	2424T-33-23	2446
	2.875	4.5	18.25	2424T-33-27	2538
3.875	1.875	4	17.25	2424T-37-17	2446
	2.375	4.5	18.25	2424T-37-23	2538
	2.875	4.5	18.75	2424T-37-27	2618
4.875	2.375	4.5	19.25	2424T-47-23	2698
	2.875	4.5	19.75	2424T-47-27	2778
	3.375	4.5	20.25	2424T-47-33	2858
5.875	2.875	4.5	20.75	2424T-57-27	2938
	3.875	4.5	21.75	2424T-57-37	3098
	4.875	4.5	22.75	2424T-57-47	3258

X-1 = 1.375				23.75 × 29.5	
X-2	B	C	H	ITEM NUMBER	NET WT.
1.875	1.375	3	13.75	2429T-17-13	2510
	1.875	3	14.25	2429T-17-17	2610
	2.375	3.5	15.25	2429T-17-23	2725
2.375	1.375	3.5	14.75	2429T-23-13	2625
	1.875	3.5	15.25	2429T-23-17	2725
	2.375	3.5	15.75	2429T-23-23	2824
2.875	1.375	3.5	15.25	2429T-27-13	2725
	1.875	3.5	15.75	2429T-27-17	2824
	2.375	3.5	16.25	2429T-27-23	2923
3.375	1.875	4	16.75	2429T-33-17	2939
	2.375	4	17.25	2429T-33-23	3038
	2.875	4.5	18.25	2429T-33-27	3153
3.875	1.875	4	17.25	2429T-37-17	3038
	2.375	4.5	18.25	2429T-37-23	3153
	2.875	4.5	18.75	2429T-37-27	3252
4.875	2.375	4.5	19.25	2429T-47-23	3351
	2.875	4.5	19.75	2429T-47-27	3451
	3.375	4.5	20.25	2429T-47-33	3550
5.875	2.875	4.5	20.75	2429T-57-27	3649
	3.875	4.5	21.75	2429T-57-37	3848
	4.875	4.5	22.75	2429T-57-47	4046

X-1 = 1.375				23.75 × 35.5	
X-2	B	C	H	ITEM NUMBER	NET WT.
1.875	1.375	3	13.75	2435T-17-13	3021
	1.875	3	14.25	2435T-17-17	3140
	2.375	3.5	15.25	2435T-17-23	3279
2.375	1.375	3.5	14.75	2435T-23-13	3159
	1.875	3.5	15.25	2435T-23-17	3279
	2.375	3.5	15.75	2435T-23-23	3398
2.875	1.375	3.5	15.25	2435T-27-13	3279
	1.875	3.5	15.75	2435T-27-17	3398
	2.375	3.5	16.25	2435T-27-23	3518
3.375	1.875	4	16.75	2435T-33-17	3536
	2.375	4	17.25	2435T-33-23	3656
	2.875	4.5	18.25	2435T-33-27	3794
3.875	1.875	4	17.25	2435T-37-17	3656
	2.375	4.5	18.25	2435T-37-23	3794
	2.875	4.5	18.75	2435T-37-27	3914
4.875	2.375	4.5	19.25	2435T-47-23	4033
	2.875	4.5	19.75	2435T-47-27	4152
	3.375	4.5	20.25	2435T-47-33	4272
5.875	2.875	4.5	20.75	2435T-57-27	4391
	3.875	4.5	21.75	2435T-57-37	4630
	4.875	4.5	22.75	2435T-57-47	4869

WHEN ORDERING, PLEASE SPECIFY:

1. Quantity & Item Number
2. No. 1, No. 2, No. 3, or No. 7 Steel
3. Locating Ring Item Number
4. E, O and R Dimensions
5. L Dimension (Leader Pin Length)
6. Method of Shipment

NOTE: For 3-Plate Extension Bushings, see page 197.

3-Plate Extension Bushings

Three-plate extension bushings can save material, reduce cycle time and help prevent runner hang-ups in 3-plate molds.

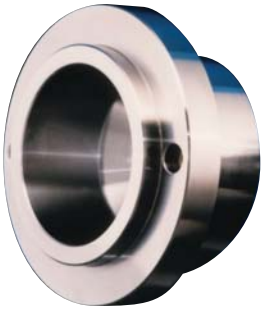

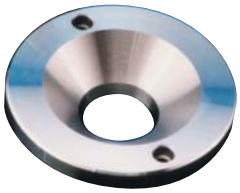

Runner Stripper Plate Bushing TEB-0001

NOTES:
1. Stripper plate bushing TEB-0001 is used with all small and large extension nozzle bushings.
2. Appropriate S.H.C.S. are included with all bushings (TEB-0001 thru TEB-0009).
3. Select small or large bushing based on "A" clamping plate (A.C.P.) thickness, X-1 stripper plate thickness, machine nozzle spherical radius and machine nozzle clearance requirements.

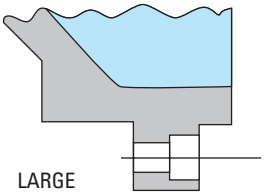

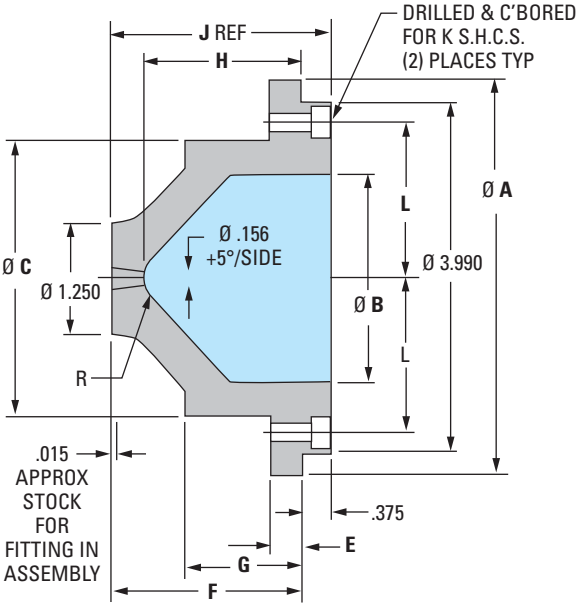

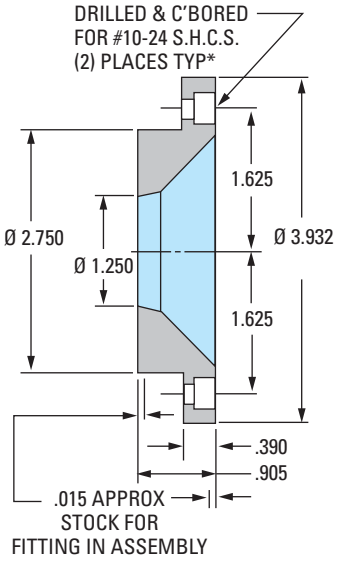

TEB-0001

ITEM NUMBER	R SPH. RAD	Ø A	Ø B	Ø C	E	F	G	H	J	K	L
TEB-0002	1/2	4.490	2.375	3.120	.375	2.265	1.377	1.875	2.640	#10-24 x 7/8 LONG (2) INCLUDED	1.781
TEB-0003	3/4							1.812			
TEB-0004	1/2					2.765	1.877	2.375	3.140		
TEB-0005	3/4							2.312			
TEB-0006	1/2	5.490	3.250	3.932	.750	2.765	1.877	2.375	3.140	5/16-18 x 7/8 LONG (2) INCLUDED	2.312
TEB-0007	3/4							2.312			
TEB-0008	1/2					3.265	2.377	2.875	3.640		
TEB-0009	3/4							2.812			

Ball Bushings for Floating Plates*

Ball Bushings are a highly effective means of reducing frictional drag in floating plates within a mold. Multiple-opening molds, with heavy floating (X) plates, are the most frequent application for either Lineal type or Pre-Loaded type Ball Bushings.

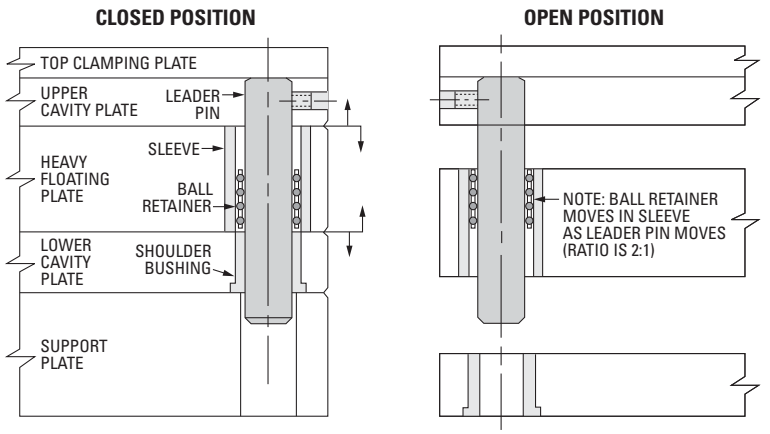

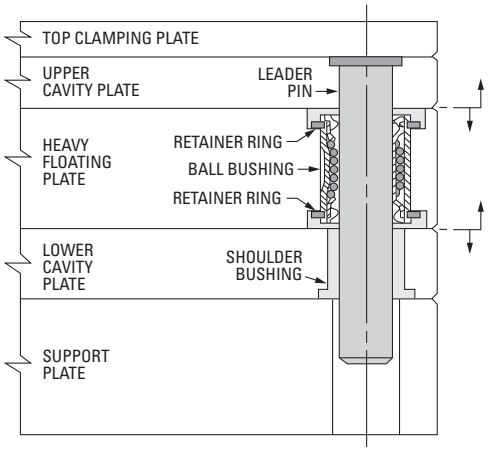

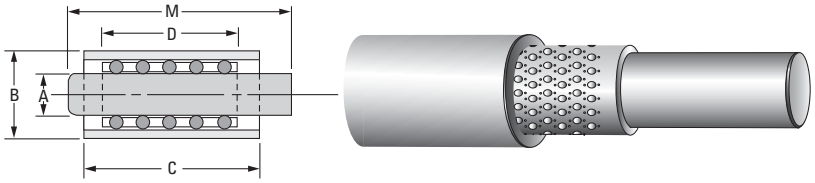

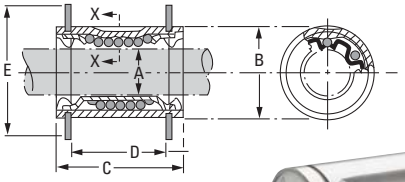

General Dimensions for DME Pre-Loaded Type Ball Bushings*

NOMINAL SIZE	3/4	1"	1 1/4	1 1/2	1 3/4	2"
A (PIN DIA.)	.753	1.003	1.253	1.503	1.753	2.003
B (BUSHING DIA.)	1.387	1.717	2.107	2.437	2.747	3.162
C (BUSHING LENGTH)	1 3/4 TO 6"	2" TO 7"	2 1/2 TO 9"	3" TO 12"	3" TO 13"	3" TO 14"
D (1/4 INCREMENT RETAINER LENGTH)	1 1/2" TO 2"	1 1/2 TO 2 1/4	2" TO 3"	2 1/2 TO 3 1/2	2 3/4 TO 4"	3 1/4 TO 4 1/4
M (PIN LENGTH)	3" TO 6"	3 3/4 TO 9"	4 1/2 TO 12"	4 1/2 TO 14"	5" TO 17"	5 1/2 TO 18"

NOTES:
Specifications shown are for DME precision grade.

Due to the larger O.D. of the bushing counterbore required, ball bushings cannot be installed in standard leader pin locations in the mold base assembly.

General Dimensions for Thomson Lineal Type Ball Bushings

BUSHING IT	A-122026	A-162536	A-203242	A-243848	A-324864
A (PIN DIA.)	.750	1.000	1.250	1.500	2.000
B (BUSHING DIA.)	1.250	1.5625	2.000	2.375	3.000
C (BUSHING LENGTH)	1.625	2.250	2.625	3.000	4.000
RETAINER RING **ITEM NUMBER**	W-750	W-1000	W-1250	W-1500	W-2000
D	1.062	1.625	1.875	2.250	3.000
E	1.620	2.040	2.500	2.910	3.600
COUNTERBORE DIA. (FOR RETAINER RING)	1.69	2.10	2.55	3.01	3.69

NOTES:
Specifications shown are for Thomson precision series A.

Two rings are required for each bushing.

Due to the larger O.D. of the bushing counterbore required, ball bushings usually cannot be installed in standard leader pin locations in the mold base assembly.

*** THESE ARE SPECIAL ORDER ITEMS ONLY.**

DME Small and Shuttle Mold Bases

HIGH-QUALITY, ECONOMICAL MOLD BASE ASSEMBLIES FOR PROTOTYPE OR PRODUCTION RUNS

Table of Contents

Small Mold Base Adapter Plates *200*
Custom Adapter Plates *201*
56U3 Mold Bases *202*
58U2 Mold Bases *203*
58U3 Mold Bases *204*
68J Mold Base *205*
68SH Shuttle Mold Base *206-207*
810SH Shuttle Mold Base *208-209*
Metric Equivalents & Conversions *210*

Small Mold Base Adapter Plates

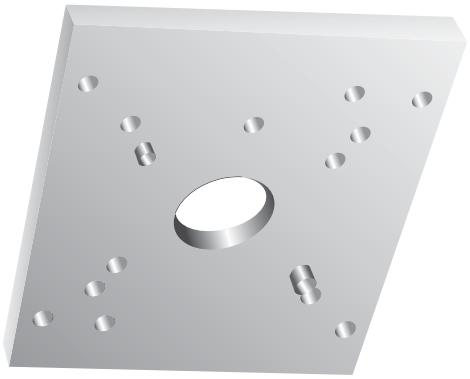

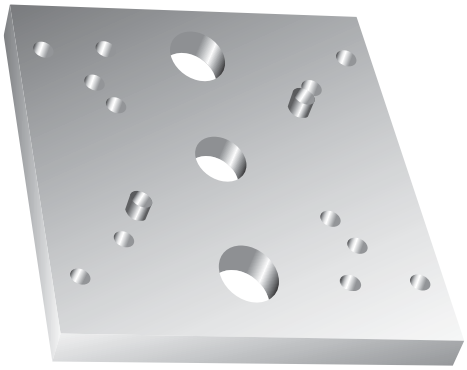

DME No. 2 Steel

With DME Small Mold Base Adapter Plates You Can...

Lower your mold costs

Only one set of low cost Adapter Plates is required for each injection molding machine. The Adapter Plates can become a permanent part of your press platen...or can easily be removed to allow installation of larger mold bases. The Adapter Plates can also be moved to another press to meet your production requirements. DME Small Mold Bases provide the highest quality, most economical mold base assemblies for either short runs or production runs. Cavity and support plates are made from DME No. 3 cavity steel.

Change mold bases in minutes

With the DME exclusive Adapter Plate System, standard 5"x 6" U and 5"x 8" U Series Mold Bases can be easily changed in 10 minutes or less. Costly machine downtime is reduced to a minimum.

Increase your profits

The DME Adapter Plate System provides economic manufacturing for greater profitability. The unique system lends itself to minimum cavity, high-speed cycle operations. Fast interchangeability of mold bases makes short runs just as profitable as long runs... no costly fill-ins!

DME Adapter Plates are:

1. Pre-drilled and tapped to match platen holes
2. Pre-machined with clearance holes for knockout rods
3. Pre-drilled and tapped to match mounting holes on DME 5"x 6" U series mold bases.... with precision dowels for fast, accurate alignment. (One dowel is off-set to prevent improper installation.)
4. Completely machined to accommodate your choice of sprue bushing and locating ring.

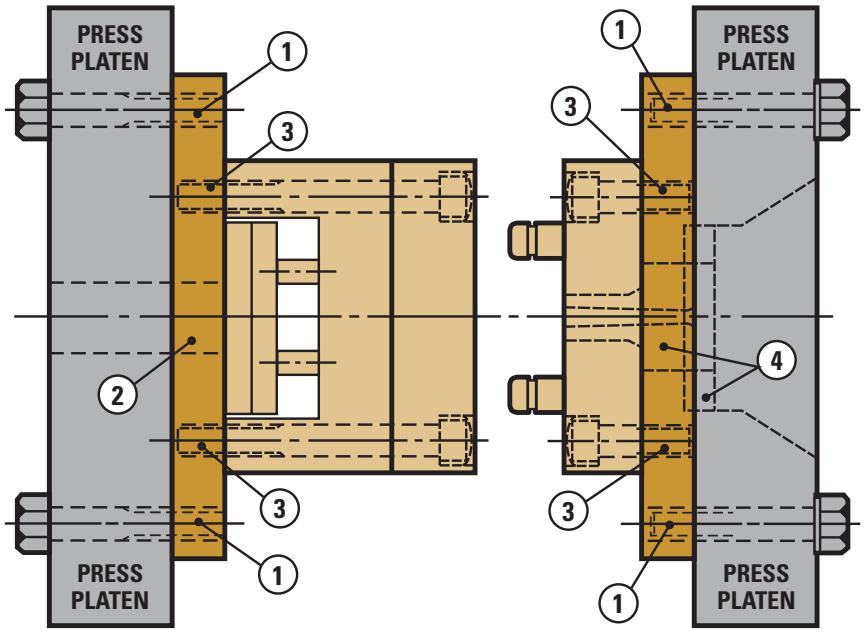

Custom Designed Standard Universal Adapter Plates – AP-5658-SET

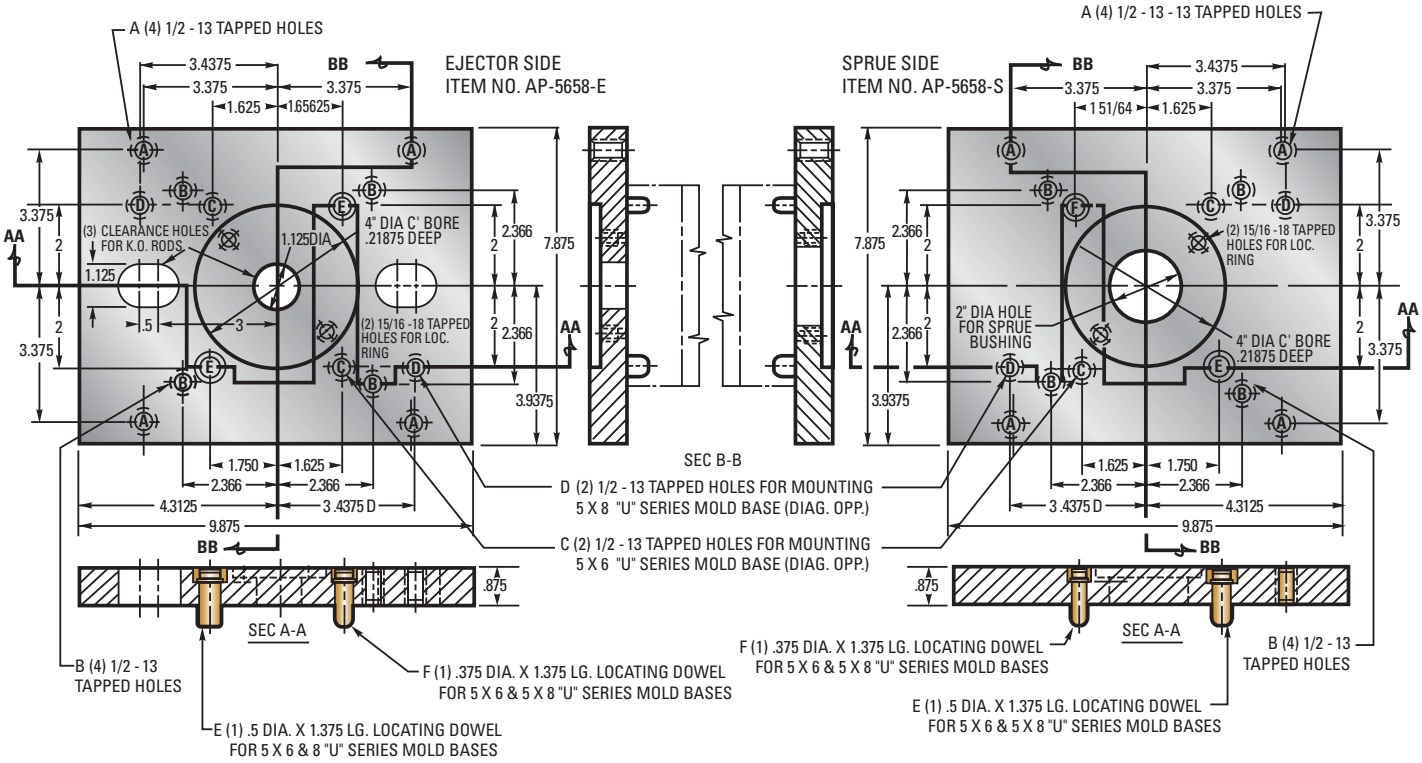

Item Number: AP-5658-SET*

***Consists of:**

ITEM	LENGTH	WIDTH	THICKNESS	NET WT.
(1) 5658S-AP-2 (SPRUE SIDE)	9.875	7.875	.875	20
(1) 5658E-AP-2 (EJECTOR SIDE)	9.875	7.875	.875	20

NOTE: Sprue bushings are supplied with DME Small mold bases. Plates MAY be ordered separately.

5" x 6" U 3-Plate Mold Bases – 56U3

These 3-plate assemblies are designed for use with DME Universal Adapter Plates.

Ejector stroke data
C = (height of riser) = 1.625
S = (max. stroke of ejector bar) = .750

WHEN ORDERING PLEASE SPECIFY:

1. Quantity & Item Number
2. Type of Sprue Bushing ("U", "UV" or "UR" Series) see DME Sprue Bushings
3. O & R Dimensions
   O = .15625, .21875 or .28125
   R = .500 or .750 ("U" Series)
   500 ("UV" Series Standard)
   or .750 ("UV" Series Special)
   No spherical radius on "UR" Series
4. Method of Shipment

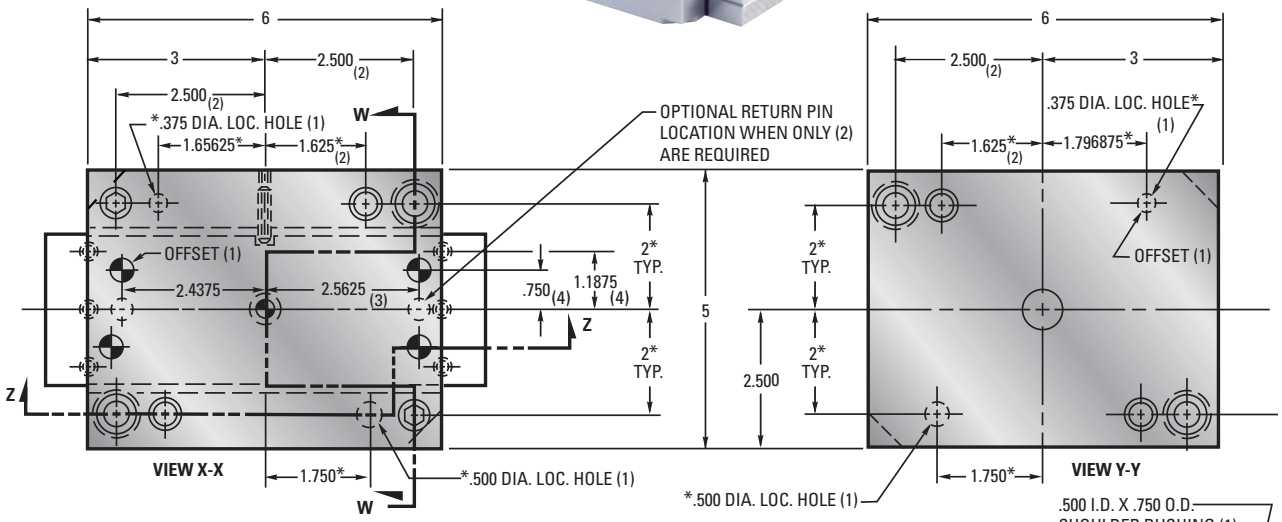

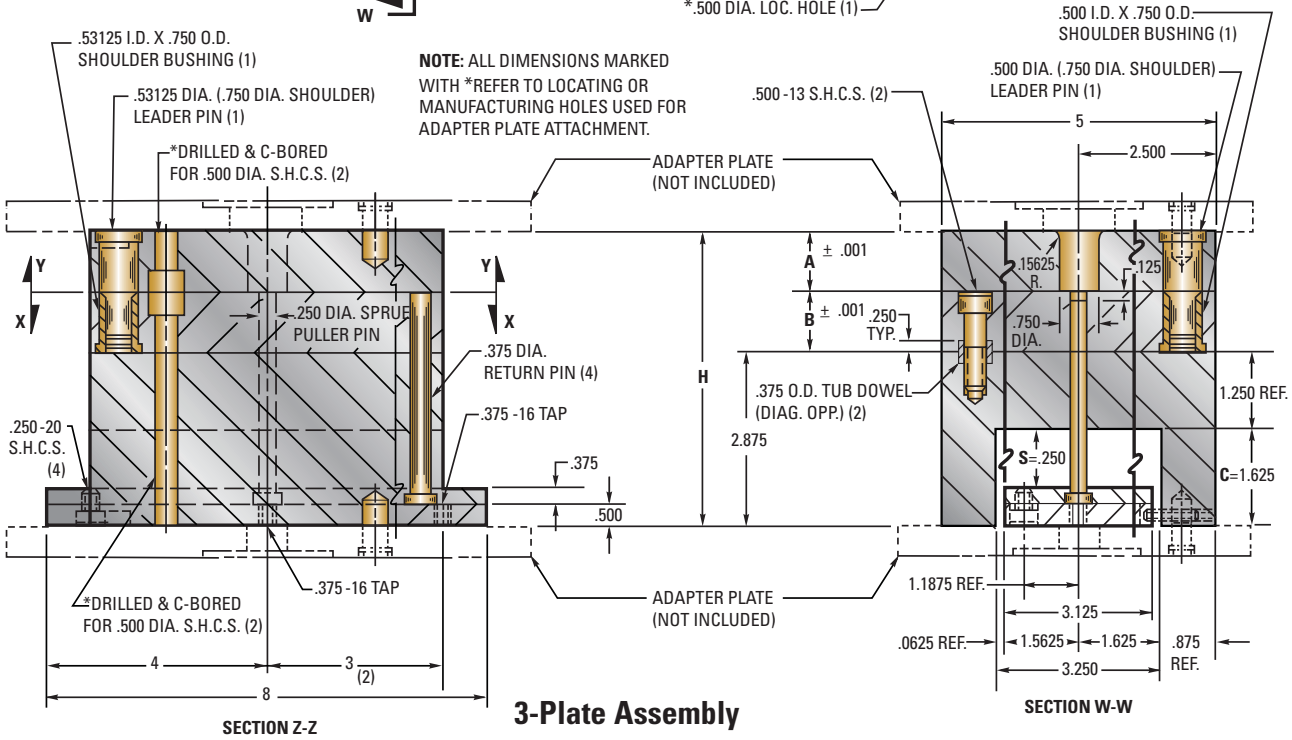

3-Plate Assembly

A	B	ITEM NUMBER	H	OVERALL ASSEMBLY HEIGHT INCLUDING ADAPTER PLATES	NET WT.
7/8	7/8	56U3-7-7	4 5/8	6 3/8	37
7/8	1 3/8	56U3-7-13	5 1/8	6 7/8	41
7/8	1 7/8	56U3-7-17	5 5/8	7 3/8	46
1 3/8	7/8	56U3-13-7	5 1/8	6 7/8	41
1 3/8	1 3/8	56U3-13-13	5 5/8	7 3/8	46

A	B	ITEM NUMBER	H	OVERALL ASSEMBLY HEIGHT INCLUDING ADAPTER PLATES	NET WT.
1 3/8	1 7/8	56U3-13-17	6 1/8	7 7/8	37
1 7/8	7/8	56U3-17-7	5 5/8	7 3/8	46
1 7/8	1 3/8	56U3-17-13	6 1/8	7 7/8	50
1 3/8	1 7/8	56U3-17-17	6 5/8	8 3/8	54

5" x 8" U 2-Plate Mold Bases – 58U2

These 2 & 3 Plate Assemblies are designed for use with DME Universal Adapter Plates

General Dimensions

O = Small Dia. of Sprue Bushing Orifice .15625, .21875 or .28125

R = Spherical Radius of Sprue Bushing .500 or .750 (see item 3 to the right)

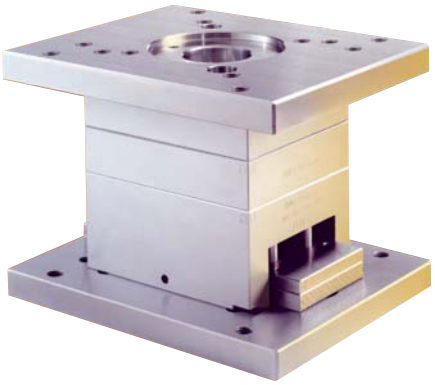

WHEN ORDERING PLEASE SPECIFY:

1. Quantity & Item Number
2. Type of Sprue Bushing ("U", "UV" or "UR" Series) see DME Sprue Bushings
3. O & R Dimensions
   O = .15625, .21875 or .28125
   R = .500 or .750 ("U" Series)
   500 ("UV" Series Standard)
   or .750 ("UV" Series Special)
   No spherical radius on "UR" Series
4. Method of Shipment

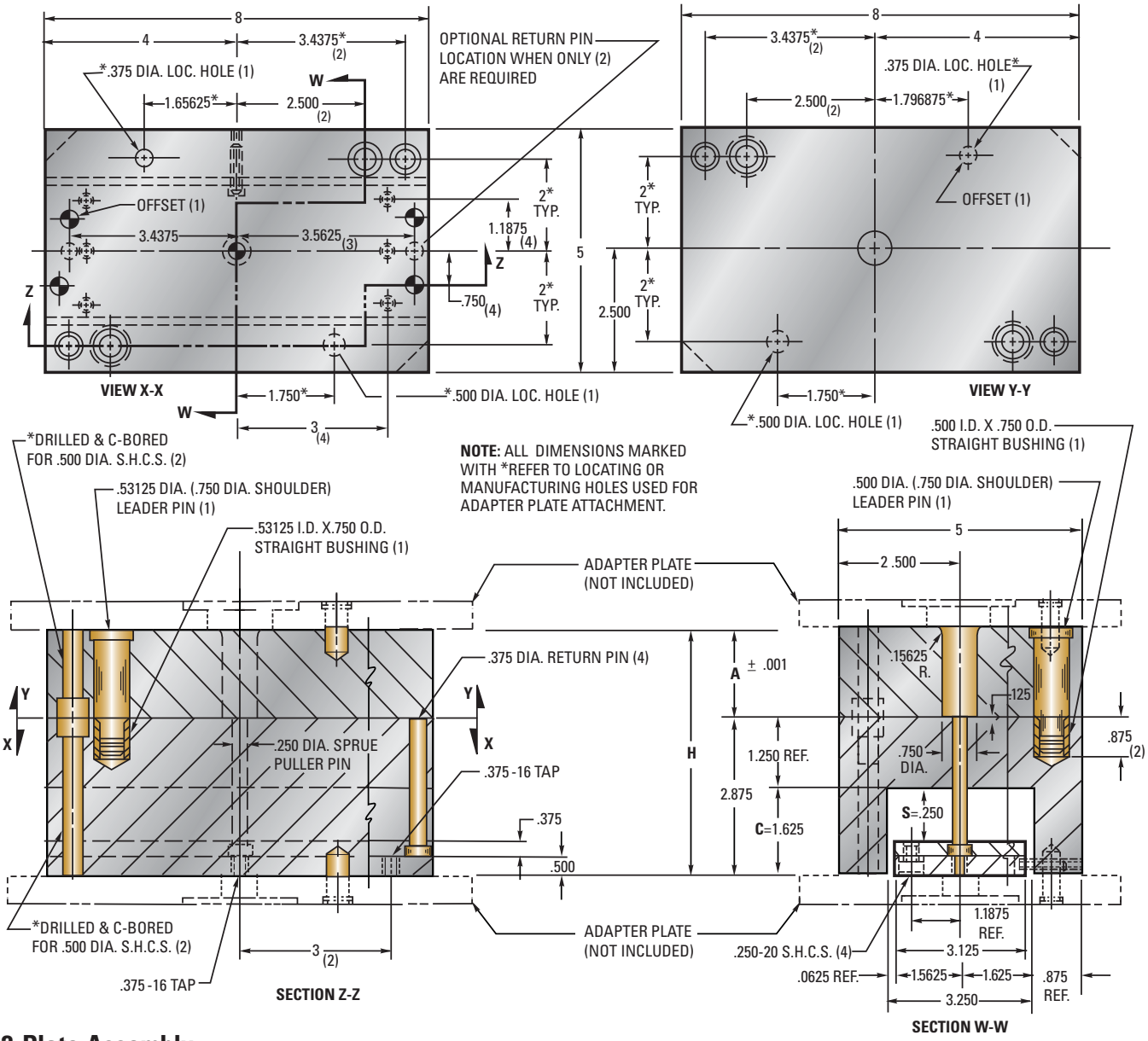

2-Plate Assembly

A	ITEM NUMBER	H	OVERALL ASSEMBLY HEIGHT INCLUDING ADAPTER PLATES	NET WT.
7/8	58U2-7	3 3/4	5 1/2	37
1 3/8	58U2-13	4 1/4	6	43
1 7/8	58U2-17	4 3/4	6 1/2	49

All 2 & 3-Plate assemblies listed are supplied complete with mounting and locating holes to match DME Universal Adapter Plates, and Standard Sprue Bushing specified. Cavity plates are made from DME No. 3 Steel.

NOTE: For 58U Plates and housings, see Mold Plates section.

5" x 8" U 3-Plate Mold Bases – 58U3

Ejector stroke data
C = (height of riser) = 1.625
S = (max. stroke of ejector bar) = .750

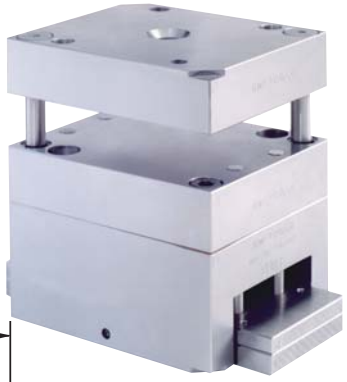

These 3-plate assemblies are designed for use with DME adapter plates.

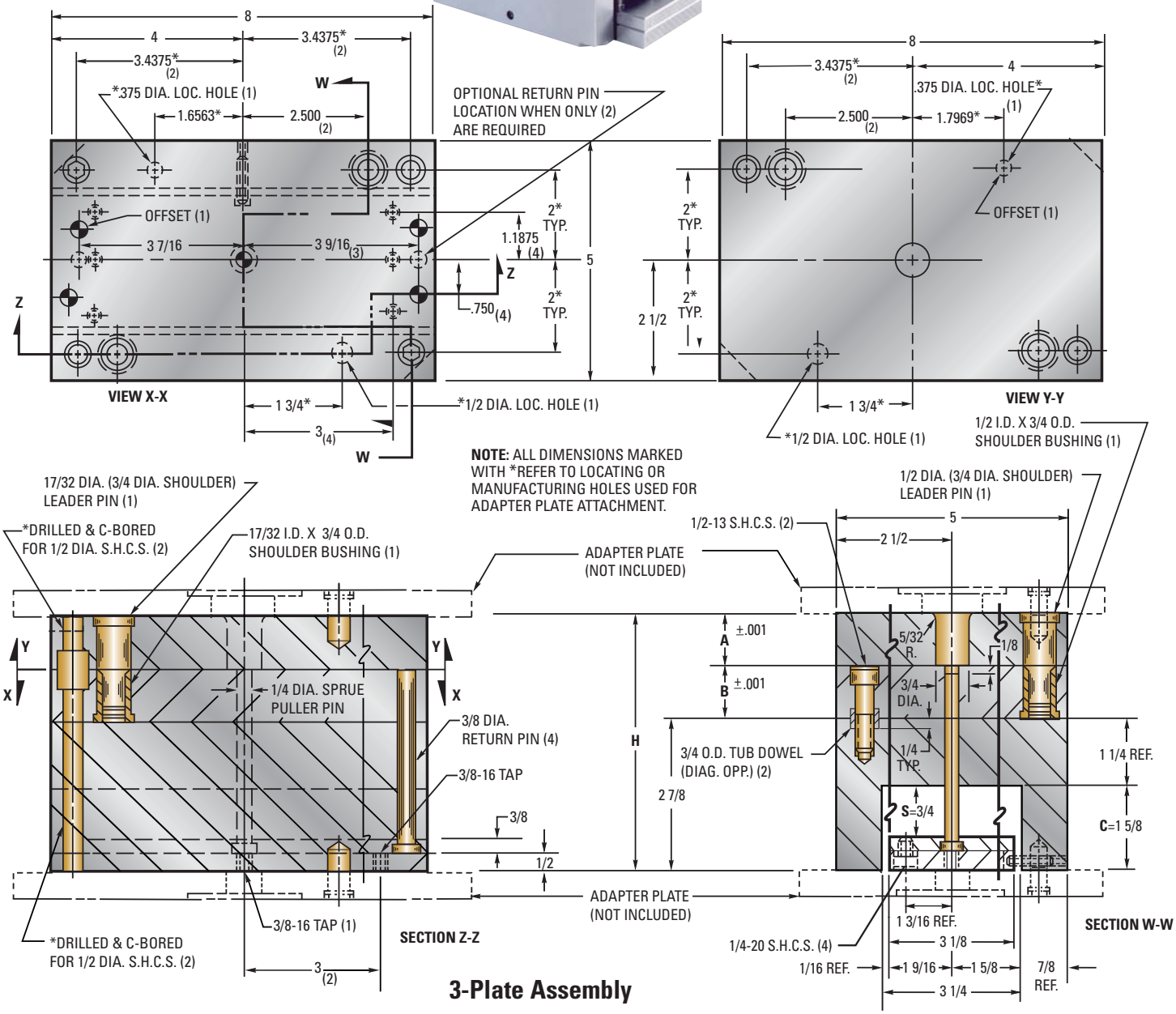

3-Plate Assembly

A	B	ITEM NUMBER	H	OVERALL ASSEMBLY HEIGHT INCLUDING ADAPTER PLATES	NET WT.
7/8	7/8	58U3-7-7	4 5/8	6 3/8	47
7/8	1 3/8	58U3-7-13	5 1/8	6 7/8	53
7/8	1 7/8	58U3-7-17	5 5/8	7 3/8	58
1 3/8	7/8	58U3-13-7	5 1/8	6 7/8	53
1 3/8	1 3/8	58U3-13-13	5 5/8	7 3/8	58

A	B	ITEM NUMBER	H	OVERALL ASSEMBLY HEIGHT INCLUDING ADAPTER PLATES	NET WT.
1 3/8	1 7/8	58U3-13-17	6 1/8	7 7/8	64
1 7/8	7/8	58U3-17-7	5 5/8	7 3/8	58
1 7/8	1 3/8	58U3-17-13	6 1/8	7 7/8	64
1 3/8	1 7/8	58U3-17-17	6 5/8	8 3/8	70

5 7/8" x 8" J Mold Bases – 68J

Ejector stroke data
C = (height of riser) = 1 5/8
S = (max stroke of ejector bar) = 7/8

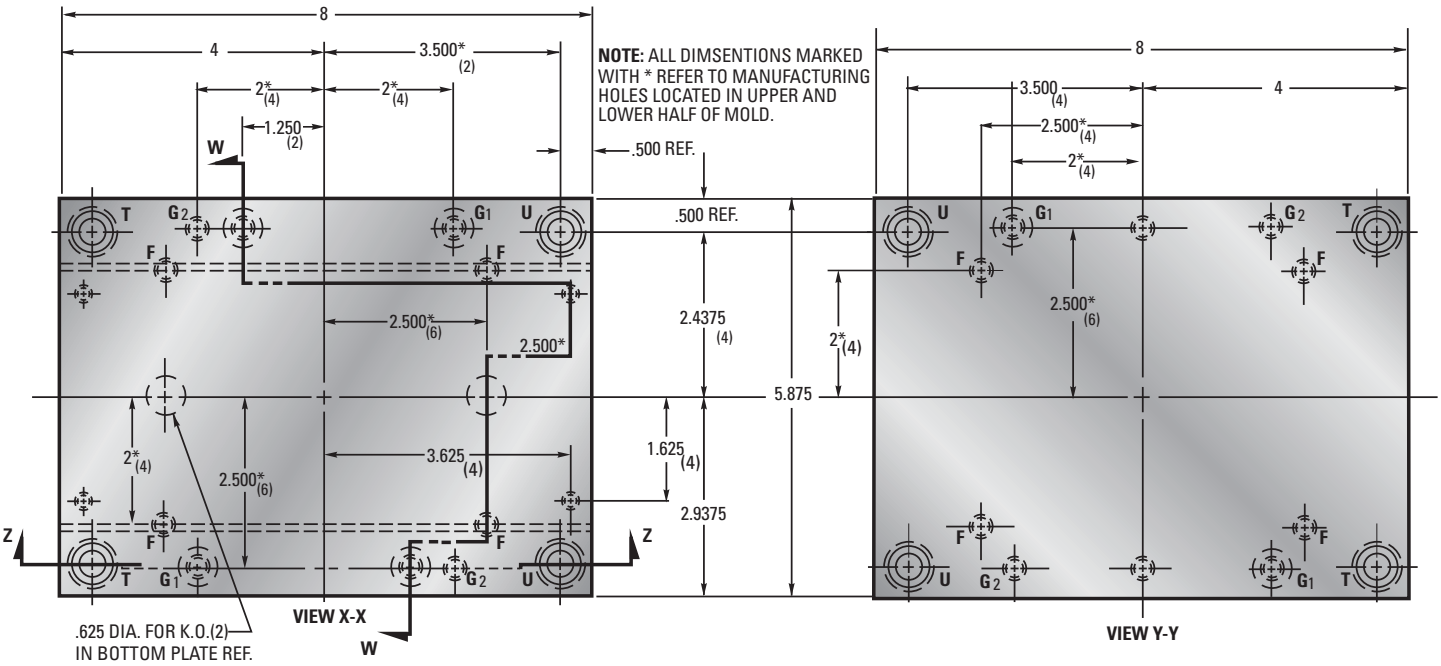

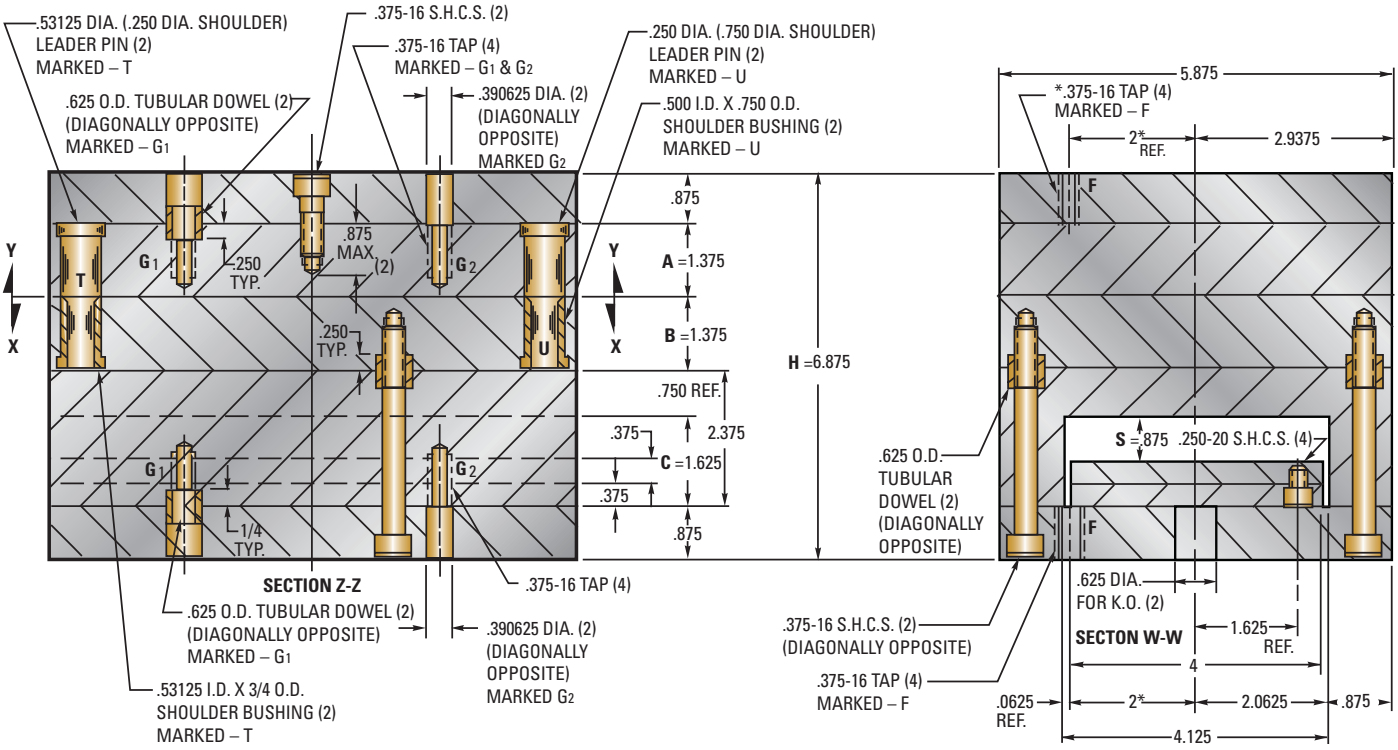

ITEM NUMBER	A	B	C	NET WT.
68J-13-13	1 3/8	1 3/8	1 5/8	84

WHEN ORDERING, PLEASE SPECIFY:
1. Quantity
2. Item Number
3. Method of Shipment

6" x 8" SH Shuttle Mold Bases – 68SH

Engineered and designed for various models of Autojectors, Moslo and Newbury vertical injection presses with shuttle tables.

EJECTOR STROKE DATA

C = (Height of Riser) = 1.25

S = (Max. Stroke of Ejector Bar) = 0.5

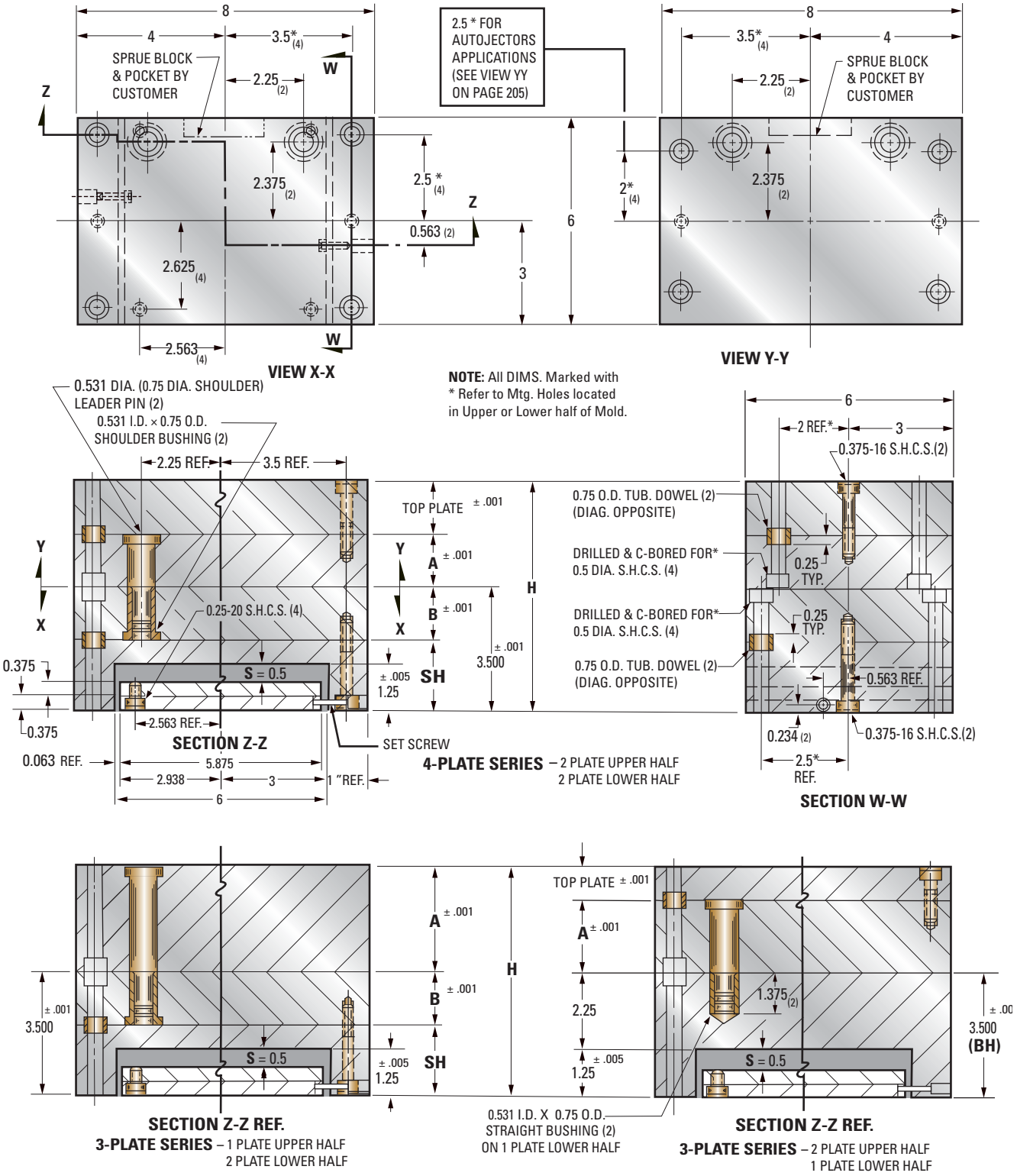

6" x 8" SH Shuttle Mold Bases – 68SH

2-PLATE SERIES

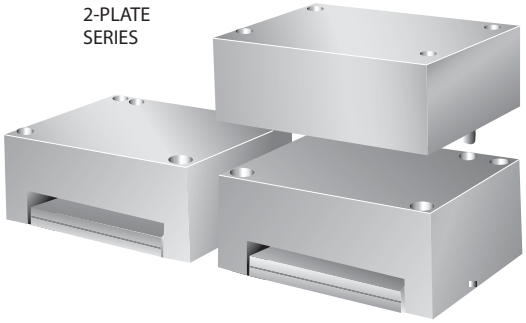

4-PLATE SERIES

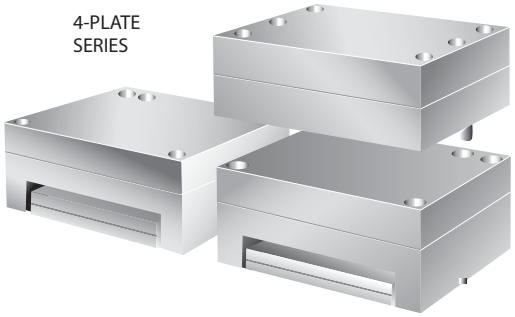

Shuttle Mold Bases listed below are supplied complete with one upper and two lower sub-assemblies. Upper and lower sub-assemblies are pre-drilled to match platen holes of presses listed in chart. The one piece ejector housings include set screws to securely hold the ejector plates in place during installation or removal.

All plates and housings are made from DME No. 3 Steel (see page 8), except for the ejector and ejector retainer plates.

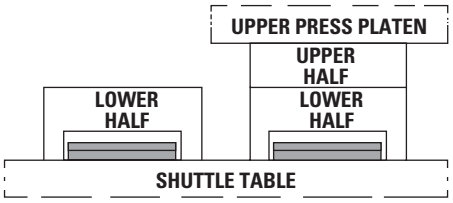

SERIES	TOP PLATE	A	B	BH	SH	H	S	FITS PRESS*	ITEM NUMBER	NET WT.
2 PLATE	–	2.875	–	3.5	–	6.375	0.5	**AJ-M-N	68SH2-0-27-22-0	124
3 PLATE	1	1.875	–	3.5	–	6.375	0.5	**AJ-M-N	68SH3-10-17-22-0	124
	–	2.875	1.375	–	2.125			**AJ-M-N	68SH3-0-27-13-7	124
4 PLATE	1.875	0.875	0.875	–	2.625	6.25	0.5	N	68SH4-17-7-7-13	123
	1.875	0.875	1.375	–	2.125			N	68SH4-17-7-13-7	123
	1.375	1.375	0.875	–	2.625			N	68SH4-13-13-7-13	123
	1.375	1.375	1.375	–	2.125			N	68SH4-13-13-13-7	123
	1	1.875	0.875	–	2.625	6.375	0.5	**AJ-M-N	68SH4-10-17-7-13	124
	1	1.875	1.375	–	2.125			**AJ-M-N	68SH4-10-17-13-7	124
	1	2	1.375	–	2.125	6.5	0.5	AJ-N	68SH4-10-20-13-7	126

***AJ** = Autojectors **M** = Moslo **N** = Newbury

NOTE: For 68SH Components, see DME's Mold Components catalog.

****NOTE:** Autojector applications with 6.375 H dimension require a 0.125" thick spacer for upper half (check with molder; machine may be equipped with required spacer).

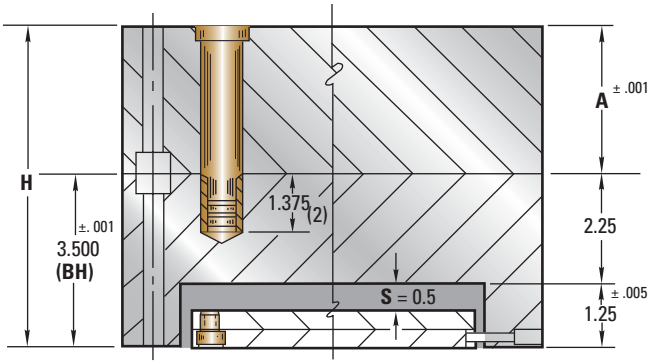

SECTION Z-Z REF.

2-PLATE SERIES – 1 PLATE UPPER HALF
1 PLATE LOWER HALF

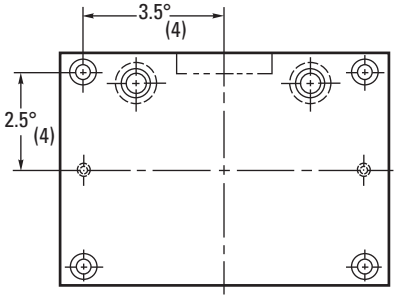

ALTERNATIVE UPPER HALF MOUNTING HOLES PROVIDED ONLY WHEN AUTOJECTORS APPLICATION IS SPECIFIED (SEE ITEM 3 BELOW).

VIEW Y-Y

WHEN ORDERING, PLEASE SPECIFY:

1. Quantity
2. Item Number
3. Mounting Hole Requirement: Standard or Autojectors
4. Method of Shipment

8" x 9⅞" SH Shuttle Mold Bases – 810SH

Engineered and designed for various models of Autojectors, Moslo, Newbury, Reed, and Van Dorn vertical injection presses with shuttle tables.

EJECTOR STROKE DATA

C	1.25	1.875
S	0.5	1"

C = Height of Riser.
S = Max. Stroke of Ejector Bar.

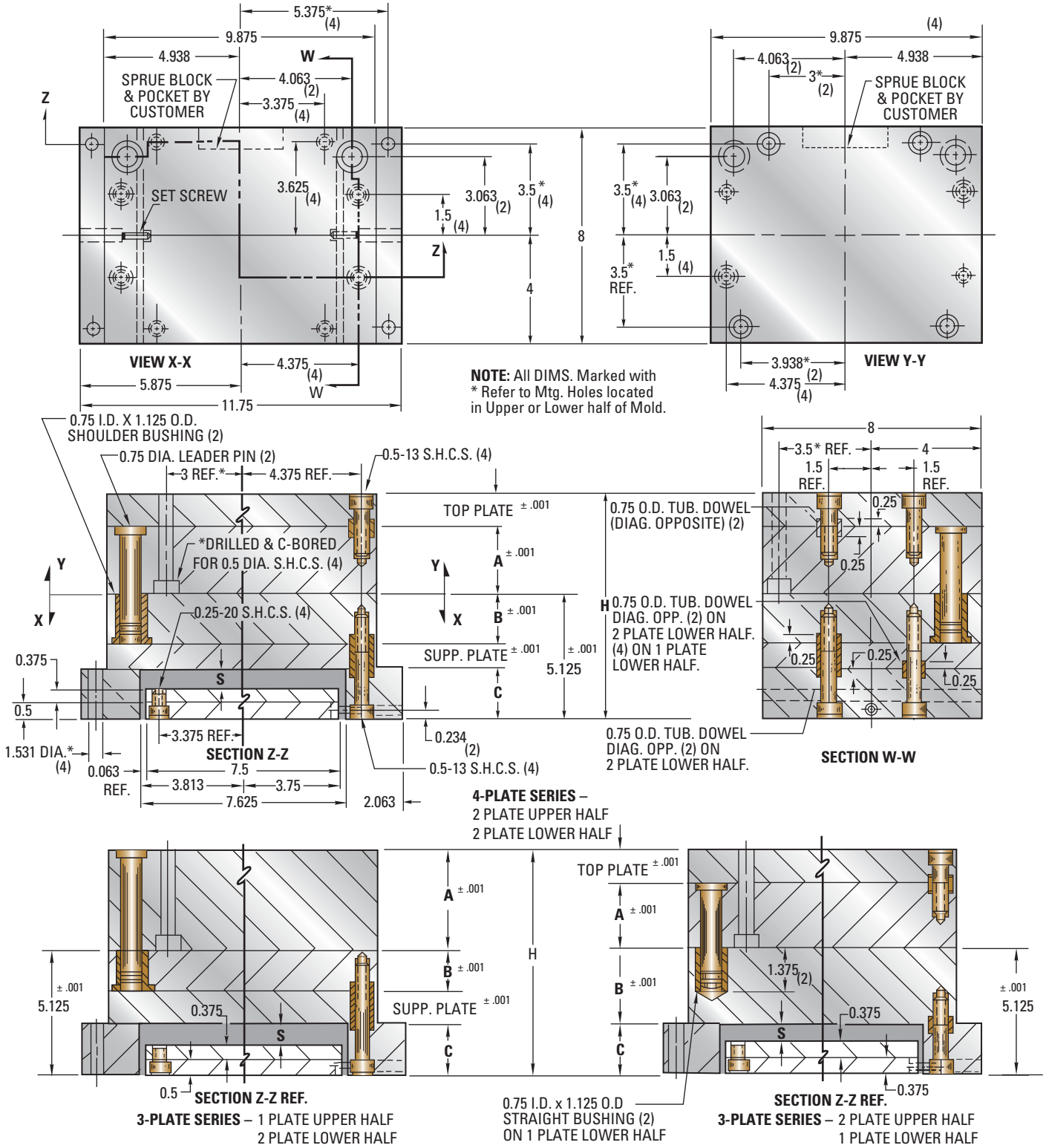

8" x 9⅞" SH Shuttle Mold Bases – 810SH

2-PLATE SERIES

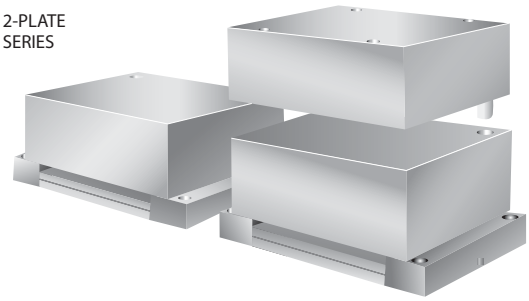

4-PLATE SERIES

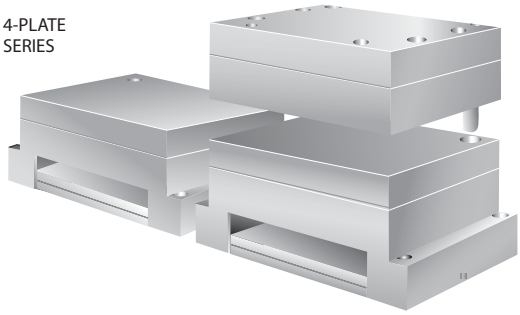

Shuttle Mold Bases listed below are supplied complete with one upper and two lower sub-assemblies. Upper and lower sub-assemblies are pre-drilled to match platen holes of presses listed in chart. Solid rails (spacer blocks) extend beyond support or cavity plate for ease of installation in press.

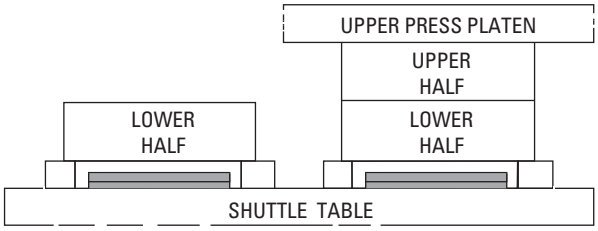

SERIES	TOP PLATE	A	B	SUPP. PLATE	C	H	S	FITS PRESS*	ITEM NUMBER	NET WT.
2 PLATE	–	3.375	3.875	–	1.25	8.5	0.5	* * AJ-M-N RD-V	810SH2-0-33-37-0	298
3 PLATE	1	2.375	3.875	–	1.25	8.5	0.5		810SH3-10-23-37-0	298
	–	3.375	1.375	1.875	1.875		1		810SH3-0-33-13-17	286
	–	3.375	1.875	1.375					810SH3-0-33-17-13	286
	–	3.375	2.375	0.875					810SH3-0-33-23-7	286
4 PLATE	2.375	0.875	0.875	2.375	1.875	8.375	1	N-RD-V	810SH4-23-7-7-23	284
	2.375	0.875	1.375	1.875				N-RD-V	810SH4-23-7-13-17	284
	1.875	1.375	1.375	1.875				N-RD-V	810SH4-17-13-13-17	284
	1.875	1.375	1.875	1.375				N-RD-V	810SH4-17-13-17-13	284
	1.875	1.375	2.375	0.875				N-RD-V	810SH4-17-13-23-7	284
	1.375	1.875	1.875	1.375				N-RD-V	810SH4-13-17-17-13	284
	1	2.375	1.375	1.875		8.5		* * AJ-M N-RD-V	810SH4-10-23-13-17	286
	1	2.375	1.875	1.375					810SH4-10-23-17-13	286
	1	2.375	2.375	0.875					810SH4-10-23-23-7	286

***AJ** = Autojectors **M** = Moslo **N** = Newbury **RD** = Reed **V** = Van Dorn

**** NOTE:** All Autojector applications require a 0.5" thick spacer for upper half (check with molder; machine may be equipped with required spacer).

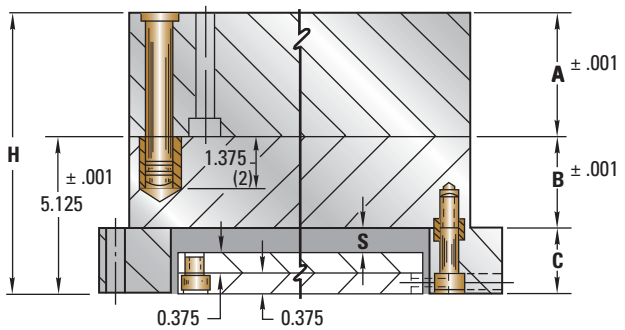

SECTION Z-Z REF.
2-PLATE SERIES – 1 PLATE UPPER HALF
1 PLATE LOWER HALF

AVAILABLE IN:

- DME No. 1 or No. 3 Steel

NO. 3 STEEL ASSEMBLY

- "A" and "B" Plate - No. 3 Steel
- Top & Support Plates - No. 2 Steel

WHEN ORDERING, PLEASE SPECIFY:

1. Quantity & Item Number
2. No. 1 or No. 3 Steel
3. Method of Shipment

Metric Equivalents and Conversions

Equivalents: Inch, fraction, decimal, millimeter

INCHES	MILLIMETERS	INCHES	MILLIMETERS
1	25.4	34	863.6
2	50.8	35	889.0
3	76.2	36	914.4
4	101.6	37	939.8
5	127.0	38	965.2
6	152.4	39	990.6
7	177.8	40	1016.0
8	203.2	41	1041.4
9	228.6	42	1066.8
10	254.0	43	1092.2
11	279.4	44	1117.6
12	304.8	45	1143.0
13	330.2	46	1168.4
14	355.6	47	1193.8
15	381.0	48	1219.2
16	406.4	49	1244.6
17	431.8	50	1270.0
18	457.2	51	1295.4
19	482.6	52	1320.8
20	508.0	53	1346.2
21	533.4	54	1371.6
22	558.8	55	1397.0
23	584.2	56	1422.4
24	609.6	57	1447.8
25	635.0	58	1473.2
26	660.4	59	1498.6
27	685.8	60	1524.0
28	711.2	61	1549.4
29	736.6	62	1574.8
30	762.0	63	1600.2
31	787.4	64	1625.6
32	812.8	65	1651.0
33	838.2	66	1676.4

INCHES		MILLIMETERS	INCHES		MILLIMETERS
1/64	0.015625	0.396875	33/64	0.515625	13.096875
1/32	0.031250	0.793750	17/32	0.531250	13.493750
3/64	0.046875	1.190625	35/64	0.546875	13.890625
1/16	0.062500	1.587500	9/16	0.562500	14.287500
5/64	0.078125	1.984375	37/64	0.578125	14.684375
3/32	0.093750	2.381250	19/32	0.593750	15.081250
7/64	0.109375	2.778125	39/64	0.609375	15.478125
1/8	0.125000	3.175000	5/8	0.625000	15.875000
9/64	0.140625	3.571875	41/64	0.640625	16.271875
5/32	0.156250	3.968750	21/32	0.656250	16.668750
11/64	0.171875	4.365625	43/64	0.671875	17.065625
3/16	0.187500	4.762500	11/16	0.687500	17.462500
13/64	0.203125	5.159375	45/64	0.703125	17.859375
7/32	0.218750	5.556250	23/32	0.718750	18.256250
15/64	0.234375	5.953125	47/64	0.734375	18.653125
1/4	0.250000	6.350000	3/4	0.750000	19.050000
17/64	0.265625	6.746875	49/64	0.765625	19.446875
9/32	0.281250	7.143750	25/32	0.781250	19.843750
19/64	0.296875	7.540625	51/64	0.796875	20.240625
5/16	0.312500	7.937500	13/16	0.812500	20.637500
21/64	0.328125	8.334375	53/64	0.828125	21.034375
11/32	0.343750	8.731250	27/32	0.843750	21.431250
23/64	0.359375	9.128125	55/64	0.859375	21.828125
3/8	0.375000	9.525000	7/8	0.875000	22.225000
25/64	0.390625	9.921875	57/64	0.890625	22.621875
13/32	0.406250	10.318750	29/32	0.906250	23.018750
27/64	0.421875	10.715625	59/64	0.921875	23.415625
7/16	0.437500	11.112500	15/16	0.937500	23.812500
29/64	0.453125	11.509375	61/64	0.953125	24.209375
15/32	0.468750	11.906250	31/32	0.968750	24.606250
31/64	0.484375	12.303125	63/64	0.984375	25.003125
1/2	0.500000	12.700000	1	1.000000	25.400000

Equivalents: Decimal, millimeter

INCHES	MILLIMETERS	INCHES	MILLIMETERS	INCHES	MILLIMETERS
0.001	0.0254	0.01	0.254	0.1	2.54
0.002	0.0508	0.02	0.508	0.2	5.08
0.003	0.0762	0.03	0.762	0.3	7.62
0.004	0.1016	0.04	1.016	0.4	10.16
0.005	0.1270	0.05	1.270	0.5	12.70
0.006	0.1524	0.06	1.524	0.6	15.24
0.007	0.1778	0.07	1.778	0.7	17.78
0.008	0.2032	0.08	2.032	0.8	20.32
0.009	0.2286	0.09	2.286	0.9	22.86

Measurement conversions

MULTIPLY BY ←	FROM →	TO →	MULTIPLY BY
	← TO	← FROM	
0.03937	inch	millimeter	25.4
0.0016	inch^2	millimeter^2	645.16
0.061	inch^3	centimeter^3	16.3871
0.2642	gallon (U.S.)	liter	3.7854
0.03527	oz. (avdp.)	gram	28.3495
2.2044	pound	kilogram	0.4536
62.43	lbs/ft^3	g/cm^3	0.0160
0.145	psi	kPa	6.8948
14.2247	psi	kg/cm^2	0.0703
1.8°C + 32	°F	°C	(°F-32)/1.8

DME MoldBasics™ Mold Bases

ECONOMICAL MOLD BASES
STOCKED FOR
IMMEDIATE DELIVERY

Features and Applications

Low Cost
Simple Construction
Broad Range of Sizes
Immediate Availability

DME new MoldBasics® mold bases are ideal for a variety of applications, including prototype molding and short-runs. Any project that requires a mold base with fewer standard features and a dramatically lower cost is perfect for the MoldBasics series. With MoldBasics, you'll have the flexibility to perform more value-added work and reduce the mold base cost significantly.

You can count on the MoldBasics series to deliver reliable, trouble-free performance. And our knowledgeable customer service representatives can help you select the mold base that's just right for your application.

The MoldBasics series mold bases ship the day your order is received – to help you meet critical deadlines. Like all DME products, your satisfaction is guaranteed with all MoldBasics series mold bases.

Features

Machining for locating ring and screws

Standard Type "A" Clamp Slot

A and B Plates
- **#1 or #2 Steel**
- **Square Milled**
- **Surface Ground Parting Line**

Offset corner clearly marked on all plates

Support Plate
- **Tubular Dowel Construction**

All Plates chamfered on edges

Return Pins
- **Positioned to prevent "spring breakout"**

Ejector Housing
- **3-Piece Solid Dowel Construction**

Features

The DME MoldBasics series is available in-stock in a range of popular sizes. This stocking program ensures rapid delivery.

To simplify ordering, this brochure provides key MoldBasics dimensions in nominal sizes from 7.875" x 7.875" up to 15.875" x 23.500". The drawings below provide specific definition of the variables referenced in the product dimension tables. Standard features of the MoldBasics series are also illustrated below.

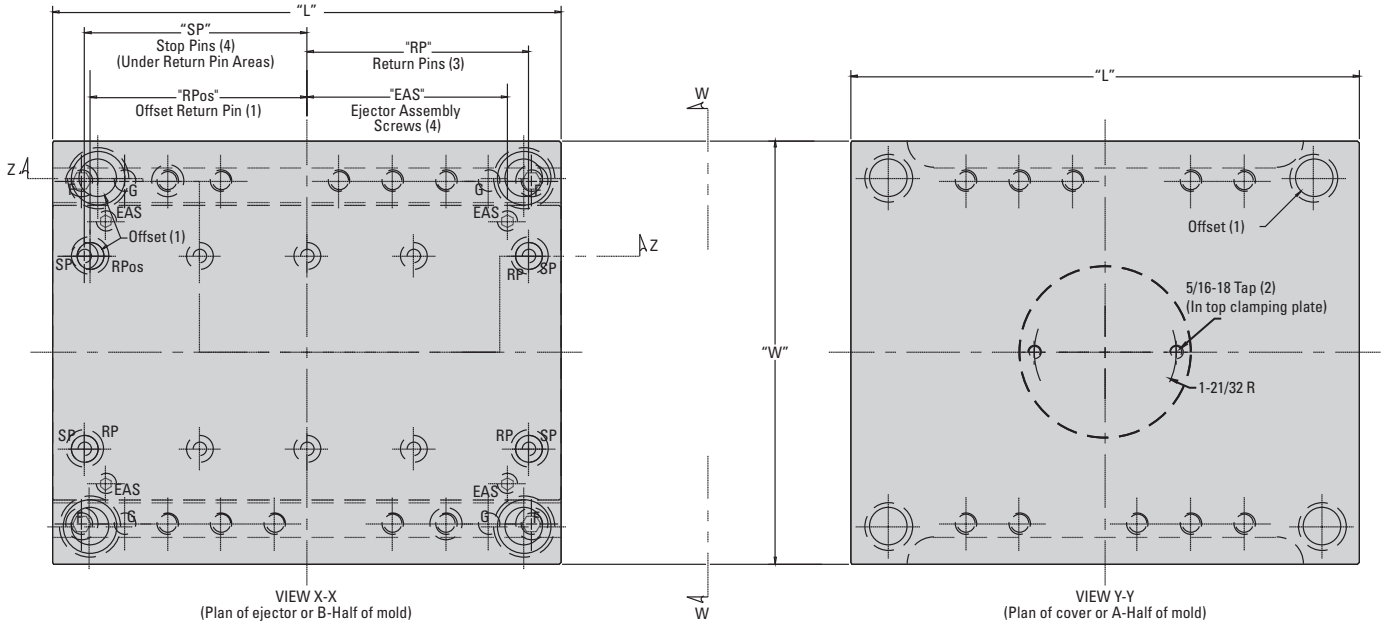

VIEW X-X
(Plan of ejector or B-Half of mold)

VIEW Y-Y
(Plan of cover or A-Half of mold)

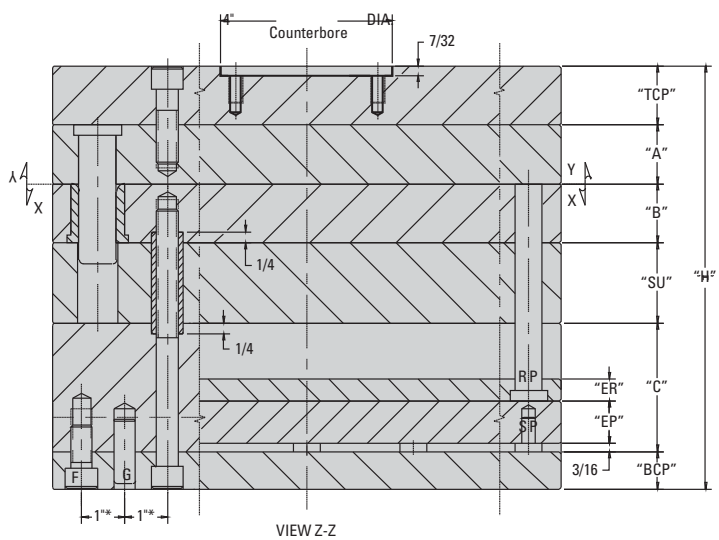

VIEW Z-Z
(Showing section cut through the stack-up of the length)

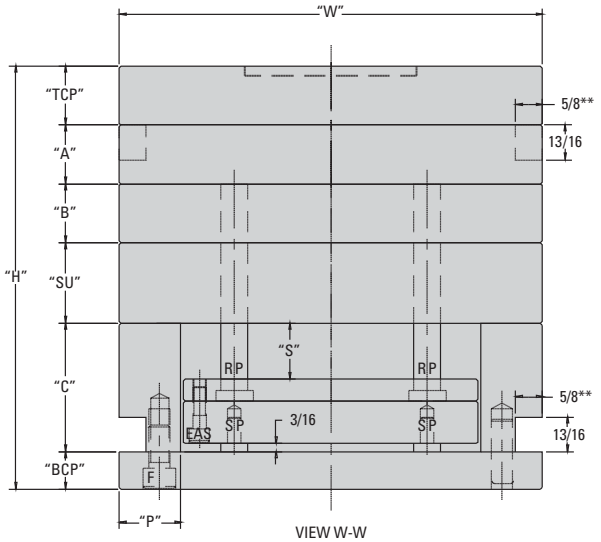

VIEW W-W
(End view showing stack-up of width)

* For all 9.875 x 8.000 mold bases, dimension is 3/4"
** For all 7.875 x 7.875 and 7.875 x 11.875 mold bases, dimension is 1/2"

Mold Base Product Line

DME MoldBasics mold bases are available in a wide range of sizes. To meet the needs of a variety of applications, all sizes are available in both #1 and #2 steel.

Thickness of A Plate	07	13	17	23	27
B Plate	07	13	17	23	27
0808	◆	◆	◆	◆	
0812	◆	◆	◆	◆	
1008	◆	◆	◆	◆	
1012	◆	◆	◆	◆	
1016	◆	◆	◆	◆	
1020		◆	◆	◆	
1112		◆	◆	◆	
1114		◆	◆	◆	
1118		◆	◆	◆	
1212		◆	◆	◆	◆
1215		◆	◆	◆	◆
1220		◆	◆	◆	◆
1315		◆	◆	◆	◆
1318		◆	◆	◆	◆
1321			◆	◆	◆
1323			◆	◆	◆
1518			◆	◆	◆
1524			◆	◆	◆
1616				◆	◆
1620				◆	◆
1623				◆	◆

No.1 Steel

DME MoldBasics #1 steel is a medium-carbon (AISI 1045), silicon-killed forging quality steel with approximately 25% greater tensile strength than typical low-carbon warehouse steels. It machines easily, but isn't "sticky," permitting a faster and smoother cut.

No.2 Steel

DME MoldBasics #2 steel is an AISI 4140-type steel. It is supplied pre-heat-treated to 28-34 Rc (269-321 Bhn). A high-strength steel, it is ideal for cavity and core retainer plates, clamping plates, and support plates in molds and dies.

Item Numbering

MBA 9999 - 99 - 99 - 9

Pre x

MBA — "MB" for MoldBasics, "A" for A Series

Nominal Size

Four numbers for nominal size. No space after pre x. Note that single-digit nominal sizes begin with a zero (e.g. "0808" for 8" x 8")

"A" Plate Thickness

Two numbers for plate thickness. Note that single-digit thicknesses begin with a zero (e.g. "07" for 7/8")

"B" Plate Thickness

Two numbers for plate thickness. Note that single-digit thicknesses begin with a zero (e.g. "07" for 7/8")

Steel Type

"1" for DME MoldBasics #1 Steel,
"2" for DME MoldBasics #2 Steel

Examples

MBA1008-07-07-2	9.875" x 8.000" mold base with 0.875" A plate and 0.875" B plate of #2 steel.
MBA0808-17-17-1	7.875" x 7.875" mold base with 1.875" A plate and 1.875" B plate of #1 steel.
MBA1623-27-27-2	15.875" x 23.500" mold base with 2.875" A plate and 2.875" B plate of #2 steel.

MoldBasics™

Product Selection Tables

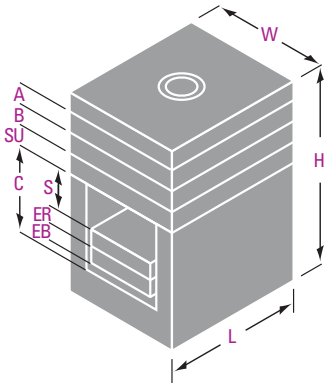

Variables

Below is a list of the variables for the MoldBasics series mold bases and their definitions

W = Width
L = Length
CP = Top clamp plate thickness
A = A plate thickness
B = B plate thickness
SU = Support plate thickness
C = Height of the riser
S = Maximum stroke of the ejector bar
H = Mold base height
EB = Ejector bar thickness
ER = Ejector retainer thickness
P = Housing riser thickness
RPx = Return pin location on the X axis (3 places)
RPy = Return pin location on the Y axis (4 places)
RPos = Return pin offset on the X axis (1 place)
RPg = Return pin diameter
LPg = Leader pin diameter

7.875 x 7.875

ITEM NUMBER	W	L	A	B	C	S	H	WEIGHT (LBS)
MBA0808-07-07	7.875	7.875	0.875	0.875	2.500	0.813	7.375	111
MBA0808-13-13	7.875	7.875	1.375	1.375	2.500	0.813	8.375	129
MBA0808-17-17	7.875	7.875	1.875	1.875	2.500	0.813	9.375	147
MBA0808-23-23	7.875	7.875	2.375	2.375	3.000	1.313	10.875	167

ALL ITEMS											
	W	7.875	EB	1.000	P	1.250	TCP	0.875	RPx	3.313	RPg	0.500
	L	7.875	ER	0.500	SU	1.375	RPos	3.188	RPy	1.500	LPg	0.750

7.875 x 11.875

ITEM NUMBER	W	L	A	B	C	S	H	WEIGHT (LBS)
MBA0812-07-07	7.875	11.875	0.875	0.875	2.500	0.813	7.875	174
MBA0812-13-13	7.875	11.875	1.375	1.375	3.000	1.313	8.875	205
MBA0812-17-17	7.875	11.875	1.875	1.875	3.500	1.813	10.375	235
MBA0812-23-23	7.875	11.875	2.375	2.375	3.500	1.813	11.375	262

ALL ITEMS											
	W	7.875	EB	1.000	P	1.250	TCP	0.875	RPx	5.313	RPg	0.500
	L	11.875	ER	0.500	SU	1.375	RPos	5.188	RPy	1.500	LPg	0.750

9.875 x 8.000

ITEM NUMBER	W	L	A	B	C	S	H	WEIGHT (LBS)
MBA1008-07-07	9.875	8.000	0.875	0.875	2.500	0.813	7.875	158
MBA1008-13-13	9.875	8.000	1.375	1.375	2.500	0.813	8.875	181
MBA1008-17-17	9.875	8.000	1.875	1.875	3.500	1.813	10.875	209
MBA1008-23-23	9.875	8.000	2.375	2.375	3.500	1.813	11.875	232

ALL ITEMS											
	W	9.875	EB	1.000	P	1.438	TCP	0.875	RPx	3.250	RPg	0.625
	L	8.000	ER	0.500	SU	1.875	RPos	3.125	RPy	2.250	LPg	0.750

9.875 x 11.875

ITEM NUMBER	W	L	A	B	C	S	H	WEIGHT (LBS)
MBA1012-07-07	9.875	11.875	0.875	0.875	2.500	0.813	7.875	235
MBA1012-13-13	9.875	11.875	1.375	1.375	3.000	1.313	9.375	273
MBA1012-17-17	9.875	11.875	1.875	1.875	3.500	1.813	10.875	311
MBA1012-23-23	9.875	11.875	2.375	2.375	3.500	1.813	11.875	344

ALL ITEMS											
	W	9.875	EB	1.000	P	1.438	TCP	0.875	RPx	5.188	RPg	0.625
	L	11.875	ER	0.500	SU	1.875	RPos	5.063	RPy	2.250	LPg	0.875

9.875 x 16.000

ITEM NUMBER	W	L	A	B	C	S	H	WEIGHT (LBS)
MBA1016-07-07	9.875	16.000	0.875	0.875	2.500	0.813	7.875	316
MBA1016-13-13	9.875	16.000	1.375	1.375	3.000	1.313	9.375	367
MBA1016-17-17	9.875	16.000	1.875	1.875	3.500	1.813	10.875	418
MBA1016-23-23	9.875	16.000	2.375	2.375	3.500	1.813	11.875	463

ALL ITEMS											
	W	9.875	EB	1.000	P	1.438	TCP	0.875	RPx	7.250	RPg	0.625
	L	16.000	ER	0.500	SU	1.875	RPos	7.125	RPy	2.250	LPg	0.875

Product Selection Tables

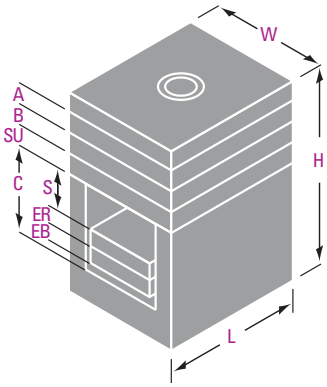

9.875 x 20.000

ITEM NUMBER	W	L	A	B	C	S	H	WEIGHT (LBS)
MBA1020-13-13	9.875	20.000	1.375	1.375	3.000	1.313	9.375	459
MBA1020-17-17	9.875	20.000	1.875	1.875	3.500	1.813	10.875	523
MBA1020-23-23	9.875	20.000	2.375	2.375	3.500	1.813	11.875	579

ALL ITEMS	W	9.875	EB	1.000	P	1.438	TCP	0.875	RPx	9.250	RPg	0.625
	L	20.000	ER	0.500	SU	1.875	RPos	9.125	RPy	2.250	LPg	0.875

10.875 x 12.000

ITEM NUMBER	W	L	A	B	C	S	H	WEIGHT (LBS)
MBA1112-13-13	10.875	12.000	1.375	1.375	3.000	1.313	9.375	305
MBA1112-17-17	10.875	12.000	1.875	1.875	3.500	1.813	10.875	347
MBA1112-23-23	10.875	12.000	2.375	2.375	3.500	1.813	11.875	384

ALL ITEMS	W	10.875	EB	1.000	P	1.688	TCP	0.875	RPx	5.250	RPg	0.625
	L	12.000	ER	0.500	SU	1.875	RPos	5.125	RPy	2.813	LPg	0.875

10.875 x 14.000

ITEM NUMBER	W	L	A	B	C	S	H	WEIGHT (LBS)
MBA1114-13-13	10.875	14.000	1.375	1.375	3.000	1.313	9.375	355
MBA1114-17-17	10.875	14.000	1.875	1.875	3.500	1.813	10.875	405
MBA1114-23-23	10.875	14.000	2.375	2.375	3.500	1.813	11.875	448

ALL ITEMS	W	10.875	EB	1.000	P	1.688	TCP	0.875	RPx	6.250	RPg	0.625
	L	14.000	ER	0.500	SU	1.875	RPos	6.125	RPy	2.813	LPg	0.875

10.875 x 18.000

ITEM NUMBER	W	L	A	B	C	S	H	WEIGHT (LBS)
MBA1118-13-13	10.875	18.000	1.375	1.375	3.000	1.313	9.375	457
MBA1118-17-17	10.875	18.000	1.875	1.875	3.500	1.813	10.875	521
MBA1118-23-23	10.875	18.000	2.375	2.375	3.500	1.813	11.875	576

ALL ITEMS	W	10.875	EB	1.000	P	1.688	TCP	0.875	RPx	8.250	RPg	0.625
	L	18.000	ER	0.500	SU	1.875	RPos	8.125	RPy	2.813	LPg	0.875

11.875 x 12.000

ITEM NUMBER	W	L	A	B	C	S	H	WEIGHT (LBS)
MBA1212-13-13	11.875	12.000	1.375	1.375	3.000	1.188	9.375	335
MBA1212-17-17	11.875	12.000	1.875	1.875	3.000	1.188	10.375	375
MBA1212-23-23	11.875	12.000	2.375	2.375	3.500	1.688	11.875	422
MBA1212-27-27	11.875	12.000	2.875	2.875	4.000	2.188	13.375	468

ALL ITEMS	W	11.875	EB	1.125	P	1.688	TCP	0.875	RPx	5.125	RPg	0.750
	L	12.000	ER	0.500	SU	1.875	RPos	5.000	RPy	3.188	LPg	1.000

Product Selection Tables

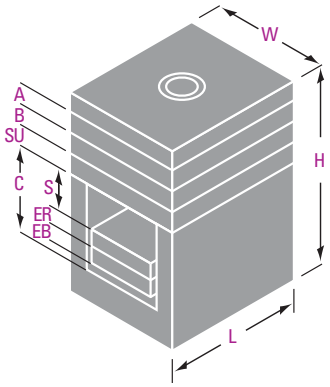

Variables

Below is a list of the variables for the MoldBasics series mold bases and their definitions

W = Width
L = Length
CP = Top clamp plate thickness
A = A plate thickness
B = B plate thickness
SU = Support plate thickness
C = Height of the riser
S = Maximum stroke of the ejector bar
H = Mold base height
EB = Ejector bar thickness
ER = Ejector retainer thickness
P = Housing riser thickness
RPx = Return pin location on the X axis (3 places)
RPy = Return pin location on the Y axis (4 places)
RPos = Return pin offset on the X axis (1 place)
RPg = Return pin diameter
LPg = Leader pin diameter

11.875 x 15.000

ITEM NUMBER	W	L	A	B	C	S	H	WEIGHT (LBS)
MBA1215-13-13	11.875	15.000	1.375	1.375	3.000	1.188	9.375	419
MBA1215-17-17	11.875	15.000	1.875	1.875	3.000	1.188	10.375	469
MBA1215-23-23	11.875	15.000	2.375	2.375	3.500	1.688	11.875	527
MBA1215-27-27	11.875	15.000	2.875	2.875	4.000	2.188	13.375	584

ALL ITEMS												
	W	11.875	EB	1.125	P	1.688	TCP	0.875	RPx	6.625	RPg	0.750
	L	15.000	ER	0.500	SU	1.875	RPos	6.500	RPy	3.188	LPg	1.000

11.875 x 20.000

ITEM NUMBER	W	L	A	B	C	S	H	WEIGHT (LBS)
MBA1220-13-13	11.875	20.000	1.375	1.375	3.000	1.188	9.375	558
MBA1220-17-17	11.875	20.000	1.875	1.875	3.000	1.188	10.375	625
MBA1220-23-23	11.875	20.000	2.375	2.375	3.500	1.688	11.875	702
MBA1220-27-27	11.875	20.000	2.875	2.875	4.000	2.188	13.375	779

ALL ITEMS												
	W	11.875	EB	1.125	P	1.688	TCP	0.875	RPx	9.125	RPg	0.750
	L	20.000	ER	0.500	SU	1.875	RPos	9.000	RPy	3.188	LPg	1.000

13.375 x 15.000

ITEM NUMBER	W	L	A	B	C	S	H	WEIGHT (LBS)
MBA1315-13-13	13.375	15.000	1.375	1.375	3.000	1.063	9.875	505
MBA1315-17-17	13.375	15.000	1.875	1.875	3.000	1.063	10.875	562
MBA1315-23-23	13.375	15.000	2.375	2.375	3.500	1.563	12.375	627
MBA1315-27-27	13.375	15.000	2.875	2.875	4.000	2.063	13.875	692

ALL ITEMS												
	W	13.375	EB	1.125	P	1.875	TCP	1.375	RPx	6.625	RPg	0.750
	L	15.000	ER	0.625	SU	1.875	RPos	6.500	RPy	3.813	LPg	1.000

13.375 x 18.000

ITEM NUMBER	W	L	A	B	C	S	H	WEIGHT (LBS)
MBA1318-13-13	13.375	18.000	1.375	1.375	3.000	1.063	9.875	606
MBA1318-17-17	13.375	18.000	1.875	1.875	3.000	1.063	10.875	675
MBA1318-23-23	13.375	18.000	2.375	2.375	3.500	1.563	12.375	752
MBA1318-27-27	13.375	18.000	2.875	2.875	4.000	2.063	13.875	830

ALL ITEMS												
	W	13.375	EB	1.125	P	1.875	TCP	1.375	RPx	8.125	RPg	0.750
	L	18.000	ER	0.625	SU	1.875	RPos	8.000	RPy	3.813	LPg	1.000

13.375 x 20.750

ITEM NUMBER	W	L	A	B	C	S	H	WEIGHT (LBS)
MBA1321-17-17	13.375	20.750	1.875	1.875	3.000	1.063	10.875	777
MBA1321-23-23	13.375	20.750	2.375	2.375	3.500	1.563	12.375	867
MBA1321-27-27	13.375	20.750	2.875	2.875	4.000	2.063	13.875	957

ALL ITEMS												
	W	13.375	EB	1.125	P	1.875	TCP	1.375	RPx	9.500	RPg	0.750
	L	20.750	ER	0.625	SU	1.875	RPos	9.375	RPy	3.813	LPg	1.000

Product Selection Tables

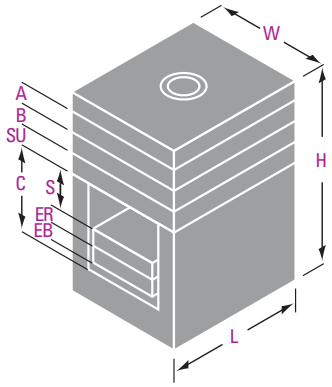

13.375 x 23.500

ITEM NUMBER	W	L	A	B	C	S	H	WEIGHT (LBS)
MBA1323-17-17	13.375	23.500	1.875	1.875	3.000	1.063	10.875	881
MBA1323-23-23	13.375	23.500	2.375	2.375	3.500	1.563	12.375	982
MBA1323-27-27	13.375	23.500	2.875	2.875	4.000	2.063	13.875	1084

ALL ITEMS												
	W	13.375	EB	1.125	P	1.875	TCP	1.375	RPx	10.875	RPg	0.750
	L	23.500	ER	0.625	SU	1.875	RPos	10.750	RPy	3.813	LPg	1.000

14.875 x 17.875

ITEM NUMBER	W	L	A	B	C	S	H	WEIGHT (LBS)
MBA1518-17-17	14.875	17.875	1.875	1.875	3.500	1.563	11.875	790
MBA1518-23-23	14.875	17.875	2.375	2.375	3.500	1.563	12.875	865
MBA1518-27-27	14.875	17.875	2.875	2.875	4.000	2.063	14.375	950

ALL ITEMS												
	W	14.875	EB	1.125	P	1.875	TCP	1.375	RPx	8.063	RPg	0.750
	L	17.875	ER	0.625	SU	2.375	RPos	7.938	RPy	3.875	LPg	1.250

14.875 x 23.750

ITEM NUMBER	W	L	A	B	C	S	H	WEIGHT (LBS)
MBA1524-17-17	14.875	23.750	1.875	1.875	3.500	1.563	11.875	1050
MBA1524-23-23	14.875	23.750	2.375	2.375	3.500	1.563	12.875	1150
MBA1524-27-27	14.875	23.750	2.875	2.875	4.000	2.063	14.375	1262

ALL ITEMS												
	W	14.875	EB	1.125	P	1.875	TCP	1.375	RPx	11.000	RPg	0.750
	L	23.750	ER	0.625	SU	2.375	RPos	10.875	RPy	3.875	LPg	1.250

15.875 x 16.000

ITEM NUMBER	W	L	A	B	C	S	H	WEIGHT (LBS)
MBA1616-23-23	15.875	16.000	2.375	2.375	3.500	1.563	12.875	825
MBA1616-27-27	15.875	16.000	2.875	2.875	4.000	2.063	14.375	906

ALL ITEMS												
	W	15.875	EB	1.125	P	1.875	TCP	1.375	RPx	7.125	RPg	0.750
	L	16.000	ER	0.625	SU	2.375	RPos	7.000	RPy	4.375	LPg	1.250

15.875 x 20.000

ITEM NUMBER	W	L	A	B	C	S	H	WEIGHT (LBS)
MBA1620-23-23	15.875	20.000	2.375	2.375	3.500	1.563	12.875	1031
MBA1620-27-27	15.875	20.000	2.875	2.875	4.000	2.063	14.375	1132

ALL ITEMS												
	W	15.875	EB	1.125	P	1.875	TCP	1.375	RPx	9.125	RPg	0.750
	L	20.000	ER	0.625	SU	2.375	RPos	9.000	RPy	4.375	LPg	1.250

15.875 x 23.500

ITEM NUMBER	W	L	A	B	C	S	H	WEIGHT (LBS)
MBA1623-23-23	15.875	23.500	2.375	2.375	3.500	1.563	12.875	1212
MBA1623-27-27	15.875	23.500	2.875	2.875	4.000	2.063	14.375	1330

ALL ITEMS												
	W	15.875	EB	1.125	P	1.875	TCP	1.375	RPx	10.875	RPg	0.750
	L	23.500	ER	0.625	SU	2.375	RPos	10.750	RPy	4.375	LPg	1.250

Value-Added MoldBasics

Stocked for immediate delivery, the DME line of MoldBasics mold bases is ideal for prototype molding and short runs. Available in-stock in a range of popular sizes, MoldBasics has fewer standard features and a much lower cost.

MoldBasics mold bases ship the day your order is received to help you meet critical deadlines. Like all DME products, MoldBasics mold bases are delivered with your satisfaction guaranteed.

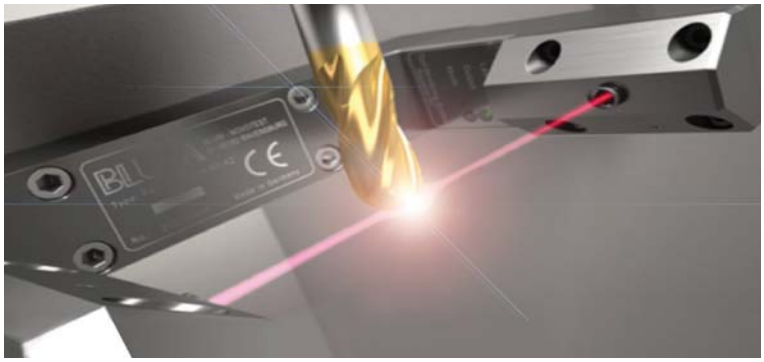

DME Cavity Retainer Sets

Cavity retainer sets that match your application requirements

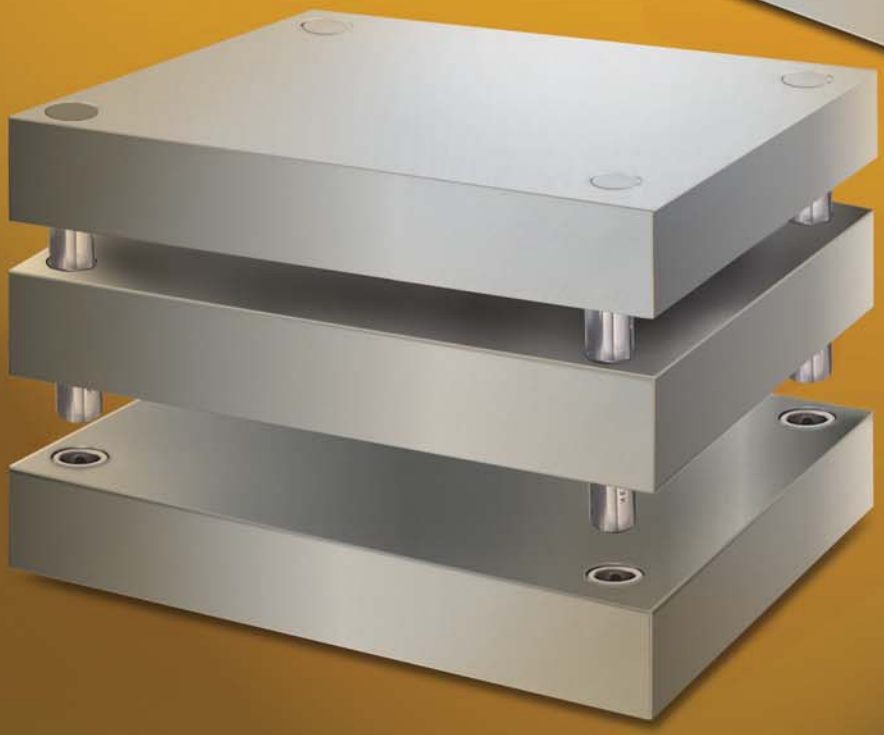

TWO-PLATE
THREE-PLATE
CAVITY
RETAINER
SETS

Steel Information

Two- and Three-Plate Cavity Retainer Sets offer accurate alignment and complete interchangeability

DME Standard Cavity Retainer Sets are available in 49 standard sizes from 6" × 10⅞" to 23¾" × 35½". Each size is offered in various cavity plate thickness combinations in your choice of DME No. 1, No. 2, No. 3 or No. 7 Steel (No. 7 available up to 2⅞ thick standard). DME's precision-built interchangeable construction makes possible the wide variety of two-plate combinations as well as the three-plate construction.

DME No. 1 Steel

DME No. 1 Steel is a medium carbon (SAE 1030), silicon-killed forging quality steel with approximately 25% greater tensile strength than typical low-carbon warehouse steels. It machines easily, but is not "sticky," permitting a faster and smoother cut.

DME No. 2 Steel

DME No. 2 Steel is an AISI 4130 type steel. It is supplied pre-heat treated to 271-321 Bhn (28-34 HRC). A high strength steel, it is ideal for cavity and core retainer plates, clamping plates and support plates in molds and dies.

DME No. 3 Steel

DME No. 3 Steel is a P-20 AISI 4130 (modified) type cavity steel. Exceptionally clean, it is pre-heat treated to 271-321 Bhn (28-34 HRC). It provides high hardness, good machinability and exceptional polishability.

DME No. 7 Steel

No. 7 Steel is a modified AISI 400 series stainless steel for holder block applications. It is supplied pre-hardened to 32-36 HRC (302-340 Bhn). This stainless steel offers corrosion resistance and exceptional machinability but cannot be further hardened (see DME No. 6). For humid environments, corrosive plastics, "clean room" or "100% stainless" applications, it is an ideal choice for all structural (non-cavity/core) mold plates.

Three-Plate Cavity Retainer Sets
Cavity Retainer Sets – 6" x 10⅞

Three-Plate Cavity Retainer Sets

When "Three-plate" Cavity Sets are ordered the following information should be specified:

- Width and length of Cavity Set, thicknesses of "A", "X-1" and "B" plates, length of leader pins and type of steel required.

To determine the price:

- Take the price of the same size Standard Cavity Retainer Set having identical "A" and "B" Plate Thicknesses… PLUS… ½ the price of a Cavity Set with "A" and "B" plates each the same thickness as the "X-1" Plate.

For quotations on assemblies with more than one floating plate, contact DME.

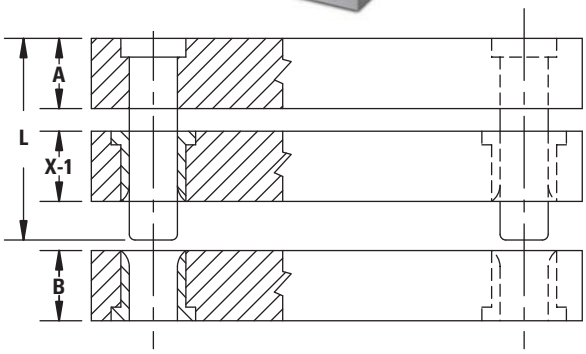

Cavity Retainer Sets – 6" × 10⅞

A	B	6" (W) × 10⅞ (L) ITEM NUMBER	NET WT.
⅞	⅞	611-7-7	33
	1⅜	611-7-13	42
	1⅞	611-7-17	51
	2⅜	611-7-23	61
	2⅞	611-7-27	70
	3⅜	611-7-33	79
1⅜	⅞	611-13-7	42
	1⅜	611-13-13	51
	1⅞	611-13-17	61
	2⅜	611-13-23	70
	2⅞	611-13-27	79
	3⅜	611-13-33	88
1⅞	⅞	611-17-7	51
	1⅜	611-17-13	61
	1⅞	611-17-17	70
	2⅜	611-17-23	79
	2⅞	611-17-27	88
	3⅜	611-17-33	98

This 6" x 10⅞ Cavity Set is designed for use in the Stokes Model 800 Compression Press.

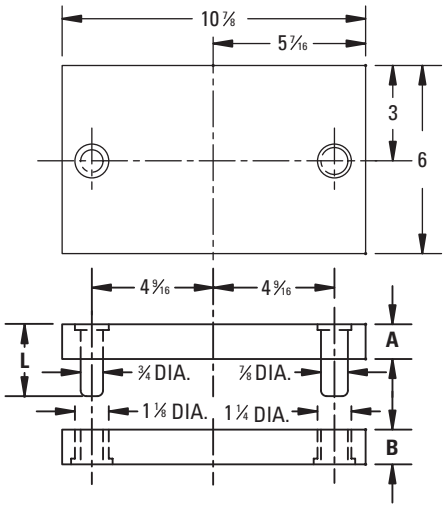

WHEN ORDERING, PLEASE SPECIFY:

1. Quantity & Item Number
2. No. 1, No. 2, No. 3 or No. 7 Steel
   (No. 7 Steel available standard only for plates up to and including 2⅞ thick)
3. L Dimension (Guide Pin Length)
4. Method of Shipment

SPECIAL ORDER SIZES: Please contact DME.

Cavity Retainer Sets
8 15/16 or 9" × 11 7/8, 9 7/8 × 7 7/8

A	B	8 15/16 OR 9" × 11 7/8 ITEM NUMBER 8 15/16	ITEM NUMBER 9"	NET WT.
7/8	7/8	912-7-7V	912-7-7M	53
	1 3/8	912-7-13V	912-7-13M	69
	1 7/8	912-7-17V	912-7-17M	84
	2 3/8	912-7-23V	912-7-23M	99
	2 7/8	–	912-7-27M	114
	3 3/8	–	912-7-33M	129
1 3/8	7/8	912-13-7V	912-13-7M	69
	1 3/8	912-13-13V	912-13-13M	84
	1 7/8	912-1317V	912-13-17M	99
	2 3/8	–	912-13-23M	114
	2 7/8	–	912-13-27M	129
	3 3/8	–	912-13-33M	144
1 7/8	7/8	912-17-7V	912-17-7M	84
	1 3/8	912-17-13V	912-17-13M	99
	1 7/8	–	912-17-17M	114
	2 3/8	–	912-17-23M	129
	2 7/8	–	912-17-27M	144
	3 3/8	–	912-17-33M	159

A	B	9" × 11 7/8 ITEM NUMBER	NET WT.
2 3/8	7/8	912-23-7M	99
	1 3/8	912-23-13M	114
	1 7/8	912-23-17M	129
	2 3/8	912-23-23M	144
	2 7/8	912-23-27M	159
	3 3/8	912-23-33M	175
2 7/8	7/8	912-27-7M	114
	1 3/8	912-27-13M	129
	1 7/8	912-27-17M	144
	2 3/8	912-27-23M	159
	2 7/8	912-27-27M	175
	3 3/8	912-27-33M	190
3 3/8	7/8	912-33-7M	129
	1 3/8	912-33-13M	144
	1 7/8	912-33-17M	159
	2 3/8	912-33-23M	175
	2 7/8	912-33-27M	190
	3 3/8	912-33-33M	205

8 15/16 or 9"× 11 7/8

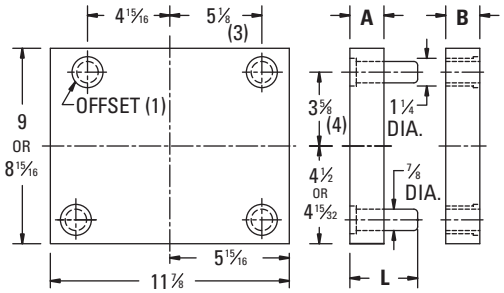

These 8 15/16 or 9" × 11 7/8 cavity retainer sets are designed for use with 912V and 912M Mold Bases.

A	B	9 7/8 × 7 7/8 ITEM NUMBER	NET WT.
7/8	7/8	108R-7-7	39
	1 3/8	108R-7-13	50
	1 7/8	108R-7-17	61
	2 3/8	108R-7-23	72
1 3/8	7/8	108R-13-7	50
	1 3/8	108R-13-13	61
	1 7/8	108R-13-17	72
1 7/8	7/8	108R-17-7	61
	1 3/8	108R-17-13	72

9 7/8 × 7 7/8

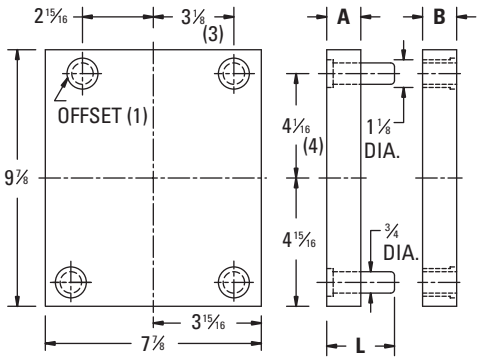

These 9 7/8 × 7 7/8 cavity retainer sets are designed for use with 108R Mold bases.

Thickness of each plate is finish ground ± .001". Width and length finished square and parallel.

WHEN ORDERING, PLEASE SPECIFY:

1. Quantity & Item Number
2. No. 1, No. 2, No. 3 or No. 7 Steel (No. 7 Steel available standard only for plates up to and including 2 7/8 thick)
3. L Dimension (Guide Pin Length)
4. Method of Shipment

SPECIAL ORDER SIZES: Please contact DME.

Cavity Retainer Sets
7⅞ × 7⅞ and 7⅞ × 11⅞

7⅞ × 7⅞

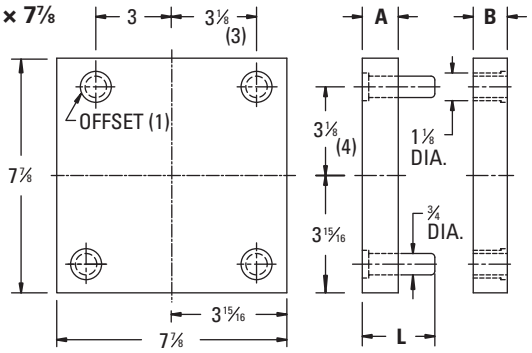

7⅞ × 11⅞

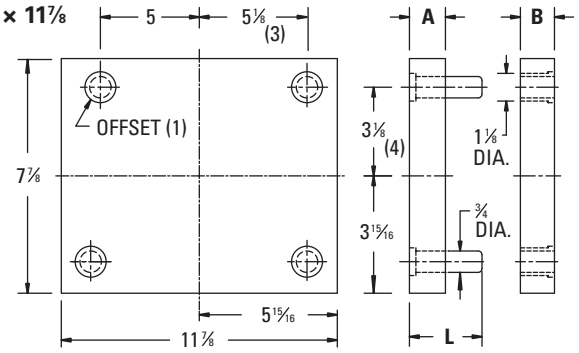

A	B	ITEM NUMBER	NET WT.
7⁄8	7⁄8	88-7-7	31
	1 3⁄8	88-7-13	40
	1 7⁄8	88-7-17	49
	2 3⁄8	88-7-23	58
	2 7⁄8	88-7-27	66
	3 3⁄8	88-7-33	75
	3 7⁄8	88-7-37	84
	4 7⁄8	88-7-47	102
	5 7⁄8	88-7-57	119
1 3⁄8	7⁄8	88-13-7	40
	1 3⁄8	88-13-13	49
	1 7⁄8	88-13-17	58
	2 3⁄8	88-13-23	66
	2 7⁄8	88-13-27	75
	3 3⁄8	88-13-33	84
	3 7⁄8	88-13-37	93
	4 7⁄8	88-13-47	110
	5 7⁄8	88-13-57	128
1 7⁄8	7⁄8	88-17-7	49
	1 3⁄8	88-17-13	58
	1 7⁄8	88-17-17	66
	2 3⁄8	88-17-23	75
	2 7⁄8	88-17-27	84
	3 3⁄8	88-17-33	93
	3 7⁄8	88-17-37	102
	4 7⁄8	88-17-47	119
	5 7⁄8	88-17-57	137
2 3⁄8	7⁄8	88-23-7	58
	1 3⁄8	88-23-13	66
	1 7⁄8	88-23-17	75
	2 3⁄8	88-23-23	84
	2 7⁄8	88-23-27	93
	3 3⁄8	88-23-33	102
	3 7⁄8	88-23-37	110
	4 7⁄8	88-23-47	128
	5 7⁄8	88-23-57	145
2 7⁄8	7⁄8	88-27-7	66
	1 3⁄8	88-27-13	75
	1 7⁄8	88-27-17	84
	2 3⁄8	88-27-23	93
	2 7⁄8	88-27-27	102
	3 3⁄8	88-27-33	110
	3 7⁄8	88-27-37	119
	4 7⁄8	88-27-47	137
	5 7⁄8	88-27-57	154

A	B	ITEM NUMBER	NET WT.
3 3⁄8	7⁄8	88-33-7	75
	1 3⁄8	88-33-13	84
	1 7⁄8	88-33-17	93
	2 3⁄8	88-33-23	102
	2 7⁄8	88-33-27	110
	3 3⁄8	88-33-33	119
	3 7⁄8	88-33-37	128
	4 7⁄8	88-33-47	145
	5 7⁄8	88-33-57	163
3 7⁄8	7⁄8	88-37-7	84
	1 3⁄8	88-37-13	93
	1 7⁄8	88-37-17	102
	2 3⁄8	88-37-23	110
	2 7⁄8	88-37-27	119
	3 3⁄8	88-37-33	128
	3 7⁄8	88-37-37	137
	4 7⁄8	88-37-47	154
	5 7⁄8	88-37-57	172
4 7⁄8	7⁄8	88-47-7	102
	1 3⁄8	88-47-13	110
	1 7⁄8	88-47-17	119
	2 3⁄8	88-47-23	128
	2 7⁄8	88-47-27	137
	3 3⁄8	88-47-33	145
	3 7⁄8	88-47-37	154
	4 7⁄8	88-47-47	172
	5 7⁄8	88-47-57	189
5 7⁄8	7⁄8	88-57-7	119
	1 3⁄8	88-57-13	128
	1 7⁄8	88-57-17	137
	2 3⁄8	88-57-23	145
	2 7⁄8	88-57-27	154
	3 3⁄8	88-57-33	163
	3 7⁄8	88-57-37	172
	4 7⁄8	88-57-47	189
	5 7⁄8	88-57-57	207

A	B	ITEM NUMBER	NET WT.
7⁄8	7⁄8	812-7-7	48
	1 3⁄8	812-7-13	61
	1 7⁄8	812-7-17	74
	2 3⁄8	812-7-23	87
	2 7⁄8	812-7-27	100
	3 3⁄8	812-7-33	113
	3 7⁄8	812-7-37	126
	4 7⁄8	812-7-47	153
	5 7⁄8	812-7-57	179
1 3⁄8	7⁄8	812-13-7	61
	1 3⁄8	812-13-13	74
	1 7⁄8	812-13-17	87
	2 3⁄8	812-13-23	100
	2 7⁄8	812-13-27	113
	3 3⁄8	812-13-33	126
	3 7⁄8	812-13-37	139
	4 7⁄8	812-13-47	166
	5 7⁄8	812-13-57	192
1 7⁄8	7⁄8	812-17-7	74
	1 3⁄8	812-17-13	87
	1 7⁄8	812-17-17	100
	2 3⁄8	812-17-23	113
	2 7⁄8	812-17-27	126
	3 3⁄8	812-17-33	139
	3 7⁄8	812-17-37	152
	4 7⁄8	812-17-47	179
	5 7⁄8	812-17-57	205
2 3⁄8	7⁄8	812-23-7	87
	1 3⁄8	812-23-13	100
	1 7⁄8	812-23-17	113
	2 3⁄8	812-23-23	126
	2 7⁄8	812-23-27	139
	3 3⁄8	812-23-33	152
	3 7⁄8	812-23-37	165
	4 7⁄8	812-23-47	192
	5 7⁄8	812-23-57	218

A	B	ITEM NUMBER	NET WT.
2 7⁄8	7⁄8	812-27-7	100
	1 3⁄8	812-27-13	113
	1 7⁄8	812-27-17	126
	2 3⁄8	812-27-23	139
	2 7⁄8	812-27-27	152
	3 3⁄8	812-27-33	165
	3 7⁄8	812-27-37	178
	4 7⁄8	812-27-47	205
	5 7⁄8	812-27-57	231
3 3⁄8	7⁄8	812-33-7	113
	1 3⁄8	812-33-13	126
	1 7⁄8	812-33-17	139
	2 3⁄8	812-33-23	152
	2 7⁄8	812-33-27	165
	3 3⁄8	812-33-33	178
	3 7⁄8	812-33-37	191
	4 7⁄8	812-33-47	218
	5 7⁄8	812-33-57	244
3 7⁄8	7⁄8	812-37-7	126
	1 3⁄8	812-37-13	139
	1 7⁄8	812-37-17	152
	2 3⁄8	812-37-23	165
	2 7⁄8	812-37-27	178
	3 3⁄8	812-37-33	191
	3 7⁄8	812-37-37	204
	4 7⁄8	812-37-47	231
	5 7⁄8	812-37-57	257
4 7⁄8	7⁄8	812-47-7	153
	1 3⁄8	812-47-13	166
	1 7⁄8	812-47-17	179
	2 3⁄8	812-47-23	192
	2 7⁄8	812-47-27	205
	3 3⁄8	812-47-33	218
	3 7⁄8	812-47-37	231
	4 7⁄8	812-47-47	258
	5 7⁄8	812-47-57	284
5 7⁄8	7⁄8	812-57-7	179
	1 3⁄8	812-57-13	192
	1 7⁄8	812-57-17	205
	2 3⁄8	812-57-23	218
	2 7⁄8	812-57-27	231
	3 3⁄8	812-57-33	244
	3 7⁄8	812-57-37	257
	4 7⁄8	812-57-47	284
	5 7⁄8	812-57-57	310

Thickness of each plate is finish ground ± .001". Width and length finished square and parallel.

WHEN ORDERING, PLEASE SPECIFY:

1. Quantity & Item Number
2. No. 1, No. 2, No. 3 or No. 7 Steel (No. 7 Steel available standard only for plates up to and including 2⅞ thick)
3. L Dimension (Guide Pin Length)
4. Method of Shipment

Cavity Retainer Sets
9⅞ × 8" and 9⅞ × 11⅞

9⅞ × 8"

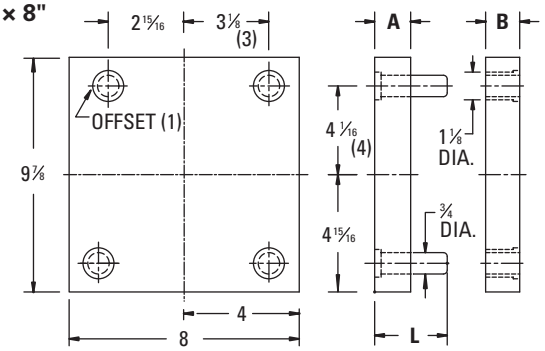

A	B	ITEM NUMBER	NET WT.
7/8	7/8	108-7-7	40
	1 3/8	108-7-13	51
	1 7/8	108-7-17	62
	2 3/8	108-7-23	73
	2 7/8	108-7-27	84
	3 3/8	108-7-33	96
	3 7/8	108-7-37	107
	4 7/8	108-7-47	129
	5 7/8	108-7-57	152
1 3/8	7/8	108-13-7	51
	1 3/8	108-13-13	62
	1 7/8	108-13-17	73
	2 3/8	108-13-23	84
	2 7/8	108-13-27	96
	3 3/8	108-13-33	107
	3 7/8	108-13-37	118
	4 7/8	108-13-47	140
	5 7/8	108-13-57	163
1 7/8	7/8	108-17-7	62
	1 3/8	108-17-13	73
	1 7/8	108-17-17	84
	2 3/8	108-17-23	96
	2 7/8	108-17-27	107
	3 3/8	108-17-33	118
	3 7/8	108-17-37	129
	4 7/8	108-17-47	152
	5 7/8	108-17-57	174
2 3/8	7/8	108-23-7	73
	1 3/8	108-23-13	84
	1 7/8	108-23-17	96
	2 3/8	108-23-23	107
	2 7/8	108-23-27	118
	3 3/8	108-23-33	129
	3 7/8	108-23-37	140
	4 7/8	108-23-47	163
	5 7/8	108-23-57	185
2 7/8	7/8	108-27-7	84
	1 3/8	108-27-13	96
	1 7/8	108-27-17	107
	2 3/8	108-27-23	118
	2 7/8	108-27-27	129
	3 3/8	108-27-33	140
	3 7/8	108-27-37	152
	4 7/8	108-27-47	174
	5 7/8	108-27-57	196

A	B	ITEM NUMBER	NET WT.
3 3/8	7/8	108-33-7	96
	1 3/8	108-33-13	107
	1 7/8	108-33-17	118
	2 3/8	108-33-23	129
	2 7/8	108-33-27	140
	3 3/8	108-33-33	152
	3 7/8	108-33-37	163
	4 7/8	108-33-47	185
	5 7/8	108-33-57	208
3 7/8	7/8	108-37-7	107
	1 3/8	108-37-13	118
	1 7/8	108-37-17	129
	2 3/8	108-37-23	140
	2 7/8	108-37-27	152
	3 3/8	108-37-33	163
	3 7/8	108-37-37	174
	4 7/8	108-37-47	196
	5 7/8	108-37-57	219
4 7/8	7/8	108-47-7	129
	1 3/8	108-47-13	140
	1 7/8	108-47-17	152
	2 3/8	108-47-23	163
	2 7/8	108-47-27	174
	3 3/8	108-47-33	185
	3 7/8	108-47-37	196
	4 7/8	108-47-47	219
	5 7/8	108-47-57	241
5 7/8	7/8	108-57-7	152
	1 3/8	108-57-13	163
	1 7/8	108-57-17	174
	2 3/8	108-57-23	185
	2 7/8	108-57-27	196
	3 3/8	108-57-33	208
	3 7/8	108-57-37	219
	4 7/8	108-57-47	241
	5 7/8	108-57-57	263

9⅞ × 11⅞

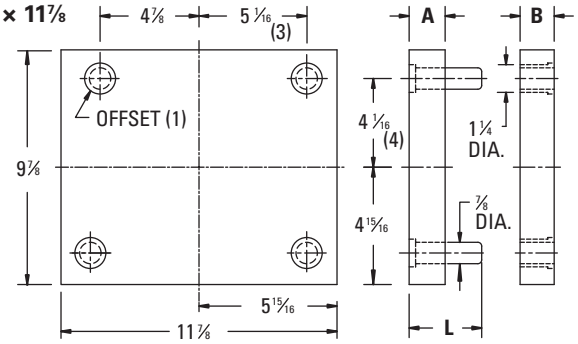

A	B	ITEM NUMBER	NET WT.
7/8	7/8	1012-7-7	59
	1 3/8	1012-7-13	75
	1 7/8	1012-7-17	92
	2 3/8	1012-7-23	108
	2 7/8	1012-7-27	125
	3 3/8	1012-7-33	142
	3 7/8	1012-7-37	158
	4 7/8	1012-7-47	192
	5 7/8	1012-7-57	225
1 3/8	7/8	1012-13-7	75
	1 3/8	1012-13-13	92
	1 7/8	1012-13-17	108
	2 3/8	1012-13-23	125
	2 7/8	1012-13-27	142
	3 3/8	1012-13-33	158
	3 7/8	1012-13-37	175
	4 7/8	1012-13-47	208
	5 7/8	1012-13-57	241
1 7/8	7/8	1012-17-7	92
	1 3/8	1012-17-13	108
	1 7/8	1012-17-17	125
	2 3/8	1012-17-23	142
	2 7/8	1012-17-27	158
	3 3/8	1012-17-33	175
	3 7/8	1012-17-37	192
	4 7/8	1012-17-47	225
	5 7/8	1012-17-57	258
2 3/8	7/8	1012-23-7	108
	1 3/8	1012-23-13	125
	1 7/8	1012-23-17	142
	2 3/8	1012-23-23	158
	2 7/8	1012-23-27	175
	3 3/8	1012-23-33	192
	3 7/8	1012-23-37	208
	4 7/8	1012-23-47	241
	5 7/8	1012-23-57	275

A	B	ITEM NUMBER	NET WT.
2 7/8	7/8	1012-27-7	125
	1 3/8	1012-27-13	142
	1 7/8	1012-27-17	158
	2 3/8	1012-27-23	175
	2 7/8	1012-27-27	192
	3 3/8	1012-27-33	208
	3 7/8	1012-27-37	225
	4 7/8	1012-27-47	258
	5 7/8	1012-27-57	291
3 3/8	7/8	1012-33-7	142
	1 3/8	1012-33-13	158
	1 7/8	1012-33-17	175
	2 3/8	1012-33-23	192
	2 7/8	1012-33-27	208
	3 3/8	1012-33-33	225
	3 7/8	1012-33-37	241
	4 7/8	1012-33-47	275
	5 7/8	1012-33-57	308
3 7/8	7/8	1012-37-7	158
	1 3/8	1012-37-13	175
	1 7/8	1012-37-17	192
	2 3/8	1012-37-23	208
	2 7/8	1012-37-27	225
	3 3/8	1012-37-33	241
	3 7/8	1012-37-37	258
	4 7/8	1012-37-47	291
	5 7/8	1012-37-57	324
4 7/8	7/8	1012-47-7	192
	1 3/8	1012-47-13	208
	1 7/8	1012-47-17	225
	2 3/8	1012-47-23	241
	2 7/8	1012-47-27	258
	3 3/8	1012-47-33	275
	3 7/8	1012-47-37	291
	4 7/8	1012-47-47	324
	5 7/8	1012-47-57	358
5 7/8	7/8	1012-57-7	225
	1 3/8	1012-57-13	241
	1 7/8	1012-57-17	258
	2 3/8	1012-57-23	275
	2 7/8	1012-57-27	291
	3 3/8	1012-57-33	308
	3 7/8	1012-57-37	324
	4 7/8	1012-57-47	358
	5 7/8	1012-57-57	391

Thickness of each plate is finish ground ± .001". Width and length finished square and parallel.

WHEN ORDERING, PLEASE SPECIFY:

1. Quantity & Item Number
2. No. 1, No. 2, No. 3 or No. 7 Steel (No. 7 Steel available standard only for plates up to and including 2⅞ thick)
3. L Dimension (Guide Pin Length)
4. Method of Shipment

Cavity Retainer Sets
9⅞ × 16" and 9⅞ × 20"

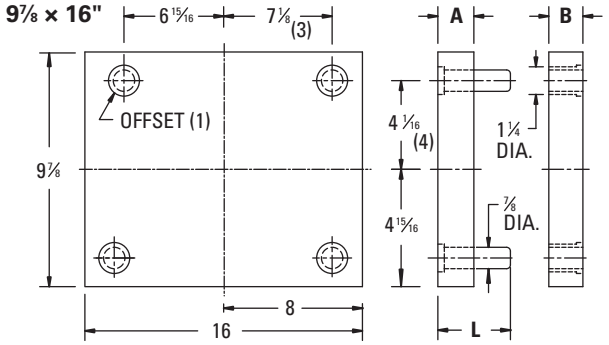

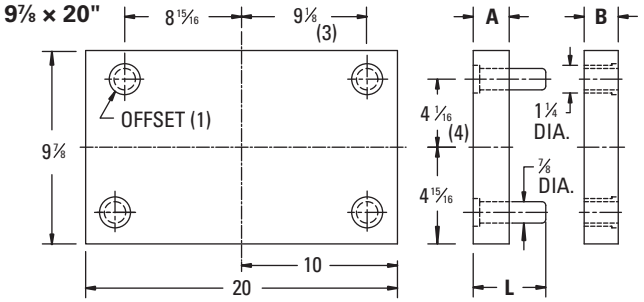

A	B	ITEM NUMBER	NET WT.
⅞	⅞	1016-7-7	79
	1⅜	1016-7-13	101
	1⅞	1016-7-17	124
	2⅜	1016-7-23	146
	2⅞	1016-7-27	168
	3⅜	1016-7-33	191
	3⅞	1016-7-37	213
	4⅞	1016-7-47	258
	5⅞	1016-7-57	303
1⅜	⅞	1016-13-7	101
	1⅜	1016-13-13	124
	1⅞	1016-13-17	146
	2⅜	1016-13-23	168
	2⅞	1016-13-27	191
	3⅜	1016-13-33	213
	3⅞	1016-13-37	235
	4⅞	1016-13-47	280
	5⅞	1016-13-57	325
1⅞	⅞	1016-17-7	124
	1⅜	1016-17-13	146
	1⅞	1016-17-17	168
	2⅜	1016-17-23	191
	2⅞	1016-17-27	213
	3⅜	1016-17-33	235
	3⅞	1016-17-37	258
	4⅞	1016-17-47	303
	5⅞	1016-17-57	347
2⅜	⅞	1016-23-7	146
	1⅜	1016-23-13	168
	1⅞	1016-23-17	191
	2⅜	1016-23-23	213
	2⅞	1016-23-27	235
	3⅜	1016-23-33	258
	3⅞	1016-23-37	280
	4⅞	1016-23-47	325
	5⅞	1016-23-57	370
2⅞	⅞	1016-27-7	168
	1⅜	1016-27-13	191
	1⅞	1016-27-17	213
	2⅜	1016-27-23	235
	2⅞	1016-27-27	258
	3⅜	1016-27-33	280
	3⅞	1016-27-37	303
	4⅞	1016-27-47	347
	5⅞	1016-27-57	392

A	B	ITEM NUMBER	NET WT.
3⅜	⅞	1016-33-7	191
	1⅜	1016-33-13	213
	1⅞	1016-33-17	235
	2⅜	1016-33-23	258
	2⅞	1016-33-27	280
	3⅜	1016-33-33	303
	3⅞	1016-33-37	325
	4⅞	1016-33-47	370
	5⅞	1016-33-57	415
3⅞	⅞	1016-37-7	213
	1⅜	1016-37-13	235
	1⅞	1016-37-17	258
	2⅜	1016-37-23	280
	2⅞	1016-37-27	303
	3⅜	1016-37-33	325
	3⅞	1016-37-37	347
	4⅞	1016-37-47	392
	5⅞	1016-37-57	437
4⅞	⅞	1016-47-7	258
	1⅜	1016-47-13	280
	1⅞	1016-47-17	303
	2⅜	1016-47-23	325
	2⅞	1016-47-27	347
	3⅜	1016-47-33	370
	3⅞	1016-47-37	392
	4⅞	1016-47-47	437
	5⅞	1016-47-57	482
5⅞	⅞	1016-57-7	303
	1⅜	1016-57-13	325
	1⅞	1016-57-17	347
	2⅜	1016-57-23	370
	2⅞	1016-57-27	392
	3⅜	1016-57-33	415
	3⅞	1016-57-37	437
	4⅞	1016-57-47	482
	5⅞	1016-57-57	526

A	B	ITEM NUMBER	NET WT.
⅞	⅞	1020-7-7	98
	1⅜	1020-7-13	126
	1⅞	1020-7-17	154
	2⅜	1020-7-23	182
	2⅞	1020-7-27	210
	3⅜	1020-7-33	238
	3⅞	1020-7-37	266
	4⅞	1020-7-47	322
	5⅞	1020-7-57	378
1⅜	⅞	1020-13-7	126
	1⅜	1020-13-13	154
	1⅞	1020-13-17	182
	2⅜	1020-13-23	210
	2⅞	1020-13-27	238
	3⅜	1020-13-33	266
	3⅞	1020-13-37	294
	4⅞	1020-13-47	350
	5⅞	1020-13-57	406
1⅞	⅞	1020-17-7	154
	1⅜	1020-17-13	182
	1⅞	1020-17-17	210
	2⅜	1020-17-23	238
	2⅞	1020-17-27	266
	3⅜	1020-17-33	294
	3⅞	1020-17-37	322
	4⅞	1020-17-47	378
	5⅞	1020-17-57	434
2⅜	⅞	1020-23-7	182
	1⅜	1020-23-13	210
	1⅞	1020-23-17	238
	2⅜	1020-23-23	266
	2⅞	1020-23-27	294
	3⅜	1020-23-33	322
	3⅞	1020-23-37	350
	4⅞	1020-23-47	406
	5⅞	1020-23-57	462

A	B	ITEM NUMBER	NET WT.
2⅞	⅞	1020-27-7	210
	1⅜	1020-27-13	238
	1⅞	1020-27-17	266
	2⅜	1020-27-23	294
	2⅞	1020-27-27	322
	3⅜	1020-27-33	350
	3⅞	1020-27-37	378
	4⅞	1020-27-47	434
	5⅞	1020-27-57	490
3⅜	⅞	1020-33-7	238
	1⅜	1020-33-13	266
	1⅞	1020-33-17	294
	2⅜	1020-33-23	322
	2⅞	1020-33-27	350
	3⅜	1020-33-33	378
	3⅞	1020-33-37	406
	4⅞	1020-33-47	462
	5⅞	1020-33-57	518
3⅞	⅞	1020-37-7	266
	1⅜	1020-37-13	294
	1⅞	1020-37-17	322
	2⅜	1020-37-23	350
	2⅞	1020-37-27	378
	3⅜	1020-37-33	406
	3⅞	1020-37-37	434
	4⅞	1020-37-47	490
	5⅞	1020-37-57	546
4⅞	⅞	1020-47-7	322
	1⅜	1020-47-13	350
	1⅞	1020-47-17	378
	2⅜	1020-47-23	406
	2⅞	1020-47-27	434
	3⅜	1020-47-33	462
	3⅞	1020-47-37	490
	4⅞	1020-47-47	546
	5⅞	1020-47-57	602
5⅞	⅞	1020-57-7	378
	1⅜	1020-57-13	406
	1⅞	1020-57-17	434
	2⅜	1020-57-23	462
	2⅞	1020-57-27	490
	3⅜	1020-57-33	518
	3⅞	1020-57-37	546
	4⅞	1020-57-47	602
	5⅞	1020-57-57	658

Thickness of each plate is finish ground ± .001". Width and length finished square and parallel.

WHEN ORDERING, PLEASE SPECIFY:

1. Quantity & Item Number
2. No. 1, No. 2, No. 3 or No. 7 Steel (No. 7 Steel available standard only for plates up to and including 2⅞ thick)
3. L Dimension (Guide Pin Length)
4. Method of Shipment

Cavity Retainer Sets
9⅞ × 23¾ and 10⅞ × 12"

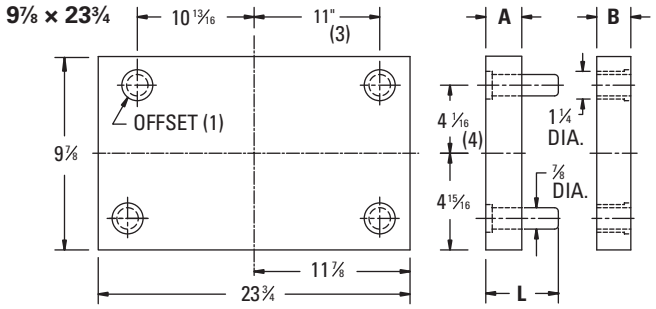

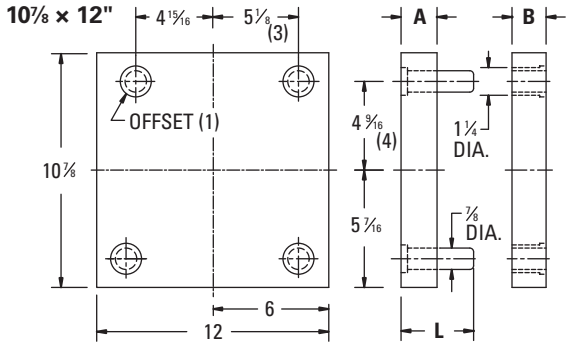

A	B	ITEM NUMBER	NET WT.
1⅜	1⅜	1024-13-13	183
	1⅞	1024-13-17	216
	2⅜	1024-13-23	250
	2⅞	1024-13-27	283
	3⅜	1024-13-33	316
	3⅞	1024-13-37	349
	4⅞	1024-13-47	416
	5⅞	1024-13-57	482
1⅞	1⅜	1024-17-13	216
	1⅞	1024-17-17	250
	2⅜	1024-17-23	283
	2⅞	1024-17-27	316
	3⅜	1024-17-33	349
	3⅞	1024-17-37	383
	4⅞	1024-17-47	449
	5⅞	1024-17-57	515
2⅜	1⅜	1024-23-13	250
	1⅞	1024-23-17	283
	2⅜	1024-23-23	316
	2⅞	1024-23-27	349
	3⅜	1024-23-33	383
	3⅞	1024-23-37	416
	4⅞	1024-23-47	482
	5⅞	1024-23-57	549
2⅞	1⅜	1024-27-13	283
	1⅞	1024-27-17	316
	2⅜	1024-27-23	349
	2⅞	1024-27-27	383
	3⅜	1024-27-33	416
	3⅞	1024-27-37	449
	4⅞	1024-27-47	515
	5⅞	1024-27-57	582

A	B	ITEM NUMBER	NET WT.
3⅜	1⅜	1024-33-13	316
	1⅞	1024-33-17	349
	2⅜	1024-33-23	383
	2⅞	1024-33-27	416
	3⅜	1024-33-33	449
	3⅞	1024-33-37	482
	4⅞	1024-33-47	549
	5⅞	1024-33-57	615
3⅞	1⅜	1024-37-13	349
	1⅞	1024-37-17	383
	2⅜	1024-37-23	416
	2⅞	1024-37-27	449
	3⅜	1024-37-33	482
	3⅞	1024-37-37	515
	4⅞	1024-37-47	582
	5⅞	1024-37-57	648
4⅞	1⅜	1024-47-13	416
	1⅞	1024-47-17	449
	2⅜	1024-47-23	482
	2⅞	1024-47-27	515
	3⅜	1024-47-33	549
	3⅞	1024-47-37	582
	4⅞	1024-47-47	648
	5⅞	1024-47-57	715
5⅞	1⅜	1024-57-13	482
	1⅞	1024-57-17	515
	2⅜	1024-57-23	549
	2⅞	1024-57-27	582
	3⅜	1024-57-33	615
	3⅞	1024-57-37	648
	4⅞	1024-57-47	715
	5⅞	1024-57-57	781

A	B	ITEM NUMBER	NET WT.
⅞	⅞	1112-7-7	65
	1⅜	1112-7-13	84
	1⅞	1112-7-17	102
	2⅜	1112-7-23	121
	2⅞	1112-7-27	139
	3⅜	1112-7-33	158
	3⅞	1112-7-37	176
	4⅞	1112-7-47	213
	5⅞	1112-7-57	250
1⅜	⅞	1112-13-7	84
	1⅜	1112-13-13	102
	1⅞	1112-13-17	121
	2⅜	1112-13 23	139
	2⅞	1112-13-27	158
	3⅜	1112-13-33	176
	3⅞	1112-13-37	195
	4⅞	1112-13-47	232
	5⅞	1112-13-57	269
1⅞	⅞	1112-17-7	102
	1⅜	1112-17-13	121
	1⅞	1112-17-17	139
	2⅜	1112-17-23	158
	2⅞	1112-17-27	176
	3⅜	1112-17-33	195
	3⅞	1112-17-37	213
	4⅞	1112-17-47	250
	5⅞	1112-17-57	287
2⅜	⅞	1112-23-7	121
	1⅜	1112-23-13	139
	1⅞	1112-23-17	158
	2⅜	1112-23-23	176
	2⅞	1112-23-27	195
	3⅜	1112-23-33	213
	3⅞	1112-23-37	232
	4⅞	1112-23-47	269
	5⅞	1112-23-57	306

A	B	ITEM NUMBER	NET WT.
2⅞	⅞	1112-27-7	139
	1⅜	1112-27 13	158
	1⅞	1112-27-17	176
	2⅜	1112-27-23	195
	2⅞	1112-27-27	213
	3⅜	1112-27-33	232
	3⅞	1112-27-37	250
	4⅞	1112-27-47	287
	5⅞	1112-27-57	324
3⅜	⅞	1112-33-7	158
	1⅜	1112 33-13	176
	1⅞	1112-33-17	195
	2⅜	1112-33-23	213
	2⅞	1112-33-27	232
	3⅜	1112-33-33	250
	3⅞	1112-33-37	269
	4⅞	1112-33-47	306
	5⅞	1112-33-57	343
3⅞	⅞	1112-37-7	176
	1⅜	1112 37-13	195
	1⅞	1112-37-17	213
	2⅜	1112-37-23	232
	2⅞	1112-37-27	250
	3⅜	1112-37-33	269
	3⅞	1112-37-37	287
	4⅞	1112-37-47	324
	5⅞	1112-37-57	361
4⅞	⅞	1112-47-7	213
	1⅜	1112-47-13	232
	1⅞	1112-47-17	250
	2⅜	1112-47-23	269
	2⅞	1112-47-27	287
	3⅜	1112-47-33	306
	3⅞	1112-47-37	324
	4⅞	1112-47-47	361
	5⅞	1112-47-57	398
5⅞	⅞	1112-57-7	250
	1⅜	1112-57-13	269
	1⅞	1112-57-17	287
	2⅜	1112-57-23	306
	2⅞	1112-57-27	324
	3⅜	1112-57-33	343
	3⅞	1112-57-37	361
	4⅞	1112-57-47	398
	5⅞	1112-57-57	435

Thickness of each plate is finish ground ± .001". Width and length finished square and parallel.

WHEN ORDERING, PLEASE SPECIFY:

1. Quantity & Item Number
2. No. 1, No. 2, No. 3 or No. 7 Steel (No. 7 Steel available standard only for plates up to and including 2⅞ thick)
3. L Dimension (Guide Pin Length)
4. Method of Shipment

SPECIAL ORDER SIZES: Please contact DME.

Cavity Retainer Sets
10⅞ × 14" and 10⅞ × 18"

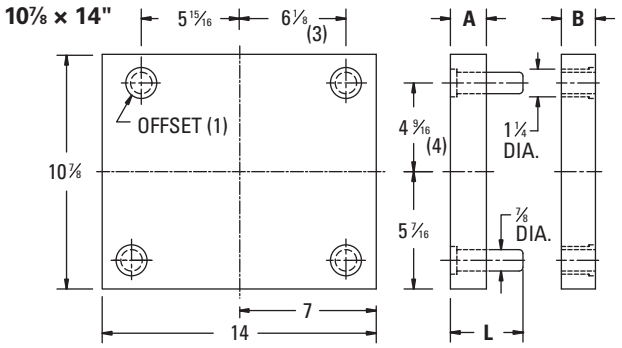

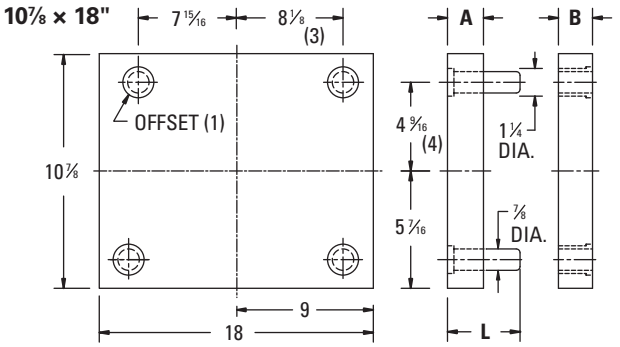

A	B	ITEM NUMBER	NET WT.
⅞	⅞	1114-7-7	76
	1⅜	1114-7-13	98
	1⅞	1114-7-17	119
	2⅜	1114-7-23	141
	2⅞	1114-7-27	162
	3⅜	1114-7-33	184
	3⅞	1114-7-37	205
	4⅞	1114-7-47	249
	5⅞	1114-7-57	292
1⅜	⅞	1114-13-7	98
	1⅜	1114-13-13	119
	1⅞	1114-13-17	141
	2⅜	1114-13-23	162
	2⅞	1114-13-27	184
	3⅜	1114-13-33	205
	3⅞	1114-13-37	227
	4⅞	1114-13-47	270
	5⅞	1114-13-57	313
1⅞	⅞	1114-17-7	119
	1⅜	1114-17-13	141
	1⅞	1114-17-17	162
	2⅜	1114-17-23	184
	2⅞	1114-17-27	205
	3⅜	1114-17-33	227
	3⅞	1114-17-37	249
	4⅞	1114-17-47	292
	5⅞	1114-17-57	335
2⅜	⅞	1114-23-7	141
	1⅜	1114-23-13	162
	1⅞	1114-23-17	184
	2⅜	1114-23-23	205
	2⅞	1114-23-27	227
	3⅜	1114-23-33	249
	3⅞	1114-23-37	270
	4⅞	1114-23-47	313
	5⅞	1114-23-57	356
2⅞	⅞	1114-27-7	162
	1⅜	1114-27-13	184
	1⅞	1114-27-17	205
	2⅜	1114-27-23	227
	2⅞	1114-27-27	249
	3⅜	1114-27-33	270
	3⅞	1114-27-37	292
	4⅞	1114-27-47	335
	5⅞	1114-27-57	378

A	B	ITEM NUMBER	NET WT.
3⅜	⅞	1114-33-7	184
	1⅜	1114-33-13	205
	1⅞	1114-33-17	227
	2⅜	1114-33-23	249
	2⅞	1114-33-27	270
	3⅜	1114-33-33	292
	3⅞	1114-33-37	313
	4⅞	1114-33-47	356
	5⅞	1114-33-57	400
3⅞	⅞	1114-37-7	205
	1⅜	1114-37-13	227
	1⅞	1114-37-17	249
	2⅜	1114-37-23	270
	2⅞	1114-37-27	292
	3⅜	1114-37-33	313
	3⅞	1114-37-37	335
	4⅞	1114-37-47	378
	5⅞	1114-37-57	421
4⅞	⅞	1114-47-7	249
	1⅜	1114-47-13	270
	1⅞	1114-47-17	292
	2⅜	1114-47-23	313
	2⅞	1114-47-27	335
	3⅜	1114-47-33	356
	3⅞	1114-47-37	378
	4⅞	1114-47-47	421
	5⅞	1114-47-57	464
5⅞	⅞	1114-57-7	292
	1⅜	1114-57-13	313
	1⅞	1114-57-17	335
	2⅜	1114-57-23	356
	2⅞	1114-57-27	378
	3⅜	1114-57-33	400
	3⅞	1114-57-37	421
	4⅞	1114-57-47	464
	5⅞	1114-57-57	507

A	B	ITEM NUMBER	NET WT.
⅞	⅞	1118-7-7	98
	1⅜	1118-7-13	125
	1⅞	1118-7-17	153
	2⅜	1118-7-23	181
	2⅞	1118-7-27	208
	3⅜	1118-7-33	236
	3⅞	1118-7-37	264
	4⅞	1118-7-47	319
	5⅞	1118-7-57	375
1⅜	⅞	1118-13-7	125
	1⅜	1118-13-13	153
	1⅞	1118-13-17	181
	2⅜	1118-13-23	208
	2⅞	1118-13-27	236
	3⅜	1118-13-33	264
	3⅞	1118-13-37	292
	4⅞	1118-13-47	347
	5⅞	1118-13-57	403
1⅞	⅞	1118-17-7	153
	1⅜	1118-17-13	181
	1⅞	1118-17-17	208
	2⅜	1118-17-23	236
	2⅞	1118-17-27	264
	3⅜	1118-17-33	292
	3⅞	1118-17-37	319
	4⅞	1118-17-47	375
	5⅞	1118-17-57	430
2⅜	⅞	1118-23-7	181
	1⅜	1118-23-13	208
	1⅞	1118-23-17	236
	2⅜	1118-23-23	264
	2⅞	1118-23-27	292
	3⅜	1118-23-33	319
	3⅞	1118-23-37	347
	4⅞	1118-23-47	403
	5⅞	1118-23-57	458

A	B	ITEM NUMBER	NET WT.
2⅞	⅞	1118-27-7	208
	1⅜	1118-27-13	236
	1⅞	1118-27-17	264
	2⅜	1118-27-23	292
	2⅞	1118-27-27	319
	3⅜	1118-27-33	347
	3⅞	1118-27-37	375
	4⅞	1118-27-47	430
	5⅞	1118-27-57	486
3⅜	⅞	1118-33-7	236
	1⅜	1118-33-13	264
	1⅞	1118-33-17	292
	2⅜	1118-33-23	319
	2⅞	1118-33-27	347
	3⅜	1118-33-33	375
	3⅞	1118-33-37	403
	4⅞	1118-33-47	458
	5⅞	1118-33-57	513
3⅞	⅞	1118-37-7	264
	1⅜	1118-37-13	292
	1⅞	1118-37-17	319
	2⅜	1118-37-23	347
	2⅞	1118-37-27	375
	3⅜	1118-37-33	403
	3⅞	1118-37-37	430
	4⅞	1118-37-47	486
	5⅞	1118-37-57	541
4⅞	⅞	1118-47-7	319
	1⅜	1118-47-13	347
	1⅞	1118-47-17	375
	2⅜	1118-47-23	403
	2⅞	1118-47-27	430
	3⅜	1118-47-33	458
	3⅞	1118-47-37	486
	4⅞	1118-47-47	541
	5⅞	1118-47-57	597
5⅞	⅞	1118-57-7	375
	1⅜	1118-57-13	403
	1⅞	1118-57-17	430
	2⅜	1118-57-23	458
	2⅞	1118-57-27	486
	3⅜	1118-57-33	513
	3⅞	1118-57-37	541
	4⅞	1118-57-47	597
	5⅞	1118-57-57	652

Thickness of each plate is finish ground ± .001". Width and length finished square and parallel.

WHEN ORDERING, PLEASE SPECIFY:

1. Quantity & Item Number
2. No. 1, No. 2, No. 3 or No. 7 Steel (No. 7 Steel available standard only for plates up to and including 2⅞ thick)
3. L Dimension (Guide Pin Length)
4. Method of Shipment

Cavity Retainer Sets
10⅞ × 23½ and 11⅞ × 12"

10⅞ × 23½

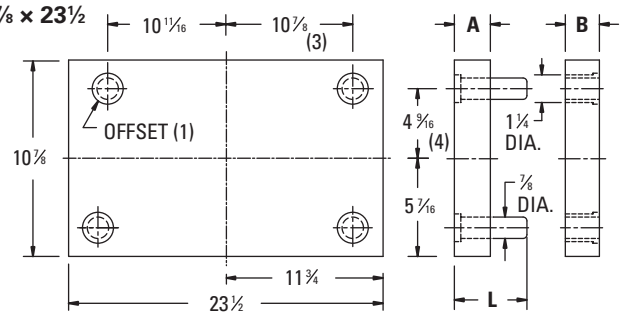

A	B	ITEM NUMBER	NET WT.
1⅜	1⅜	1123-13-13	200
	1⅞	1123-13-17	236
	2⅜	1123-13-23	272
	2⅞	1123-13-27	308
	3⅜	1123-13-33	344
	3⅞	1123-13-37	381
	4⅞	1123-13-47	453
	5⅞	1123-13-57	525
1⅞	1⅜	1123-17-13	236
	1⅞	1123-17-17	272
	2⅜	1123-17-23	308
	2⅞	1123-17-27	344
	3⅜	1123-17-33	381
	3⅞	1123-17-37	417
	4⅞	1123-17-47	489
	5⅞	1123-17-57	562
2⅜	1⅜	1123-23-13	272
	1⅞	1123-23-17	308
	2⅜	1123-23-23	344
	2⅞	1123-23-27	381
	3⅜	1123-23-33	417
	3⅞	1123-23-37	453
	4⅞	1123-23-47	525
	5⅞	1123-23-57	598
2⅞	1⅜	1123-27-13	308
	1⅞	1123-27-17	344
	2⅜	1123-27-23	381
	2⅞	1123-27-27	417
	3⅜	1123-27-33	453
	3⅞	1123-27-37	489
	4⅞	1123-27-47	562
	5⅞	1123-27-57	634

A	B	ITEM NUMBER	NET WT.
3⅜	1⅜	1123-33-13	344
	1⅞	1123-33-17	381
	2⅜	1123-33-23	417
	2⅞	1123-33-27	453
	3⅜	1123-33-33	489
	3⅞	1123-33-37	525
	4⅞	1123-33-47	598
	5⅞	1123-33-57	670
3⅞	1⅜	1123-37-13	381
	1⅞	1123-37-17	417
	2⅜	1123-37-23	453
	2⅞	1123-37-27	489
	3⅜	1123-37-33	525
	3⅞	1123-37-37	562
	4⅞	1123-37-47	634
	5⅞	1123-37-57	706
4⅞	1⅜	1123-47-13	453
	1⅞	1123-47-17	489
	2⅜	1123-47-23	525
	2⅞	1123-47-27	562
	3⅜	1123-47-33	598
	3⅞	1123-47-37	634
	4⅞	1123-47-47	706
	5⅞	1123-47-57	779
5⅞	1⅜	1123-57-13	525
	1⅞	1123-57-17	562
	2⅜	1123-57-23	598
	2⅞	1123-57-27	634
	3⅜	1123-57-33	670
	3⅞	1123-57-37	706
	4⅞	1123-57-47	779
	5⅞	1123-57-57	851

11⅞ × 12"

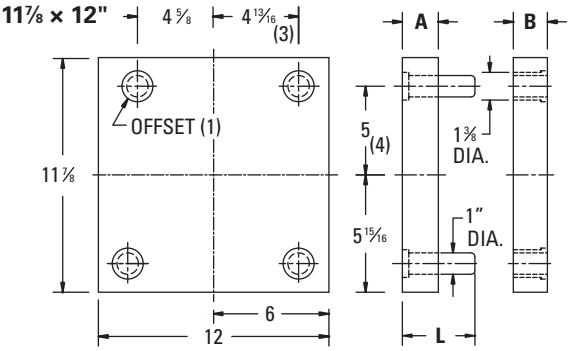

A	B	ITEM NUMBER	NET WT.
⅞	⅞	1212-7-7	71
	1⅜	1212-7-13	91
	1⅞	1212-7-17	112
	2⅜	1212-7-23	132
	2⅞	1212-7-27	152
	3⅜	1212-7-33	172
	3⅞	1212-7-37	192
	4⅞	1212-7-47	233
	5⅞	1212-7-57	273
1⅜	⅞	1212-13-7	91
	1⅜	1212-13-13	112
	1⅞	1212-13-17	132
	2⅜	1212-13-23	152
	2⅞	1212-13-27	172
	3⅜	1212-13-33	192
	3⅞	1212-13-37	212
	4⅞	1212-13-47	253
	5⅞	1212-13-57	293
1⅞	⅞	1212-17-7	112
	1⅜	1212-17-13	132
	1⅞	1212-17-17	152
	2⅜	1212-17-23	172
	2⅞	1212-17-27	192
	3⅜	1212-17-33	212
	3⅞	1212-17-37	233
	4⅞	1212-17-47	273
	5⅞	1212-17-57	313
2⅜	⅞	1212-23-7	132
	1⅜	1212-23-13	152
	1⅞	1212-23-17	172
	2⅜	1212-23-23	192
	2⅞	1212-23-27	212
	3⅜	1212-23-33	233
	3⅞	1212-23-37	253
	4⅞	1212-23-47	293
	5⅞	1212-23-57	334

A	B	ITEM NUMBER	NET WT.
2⅞	⅞	1212-27-7	152
	1⅜	1212-27-13	172
	1⅞	1212-27-17	192
	2⅜	1212-27-23	212
	2⅞	1212-27-27	233
	3⅜	1212-27-33	253
	3⅞	1212-27-37	273
	4⅞	1212-27-47	313
	5⅞	1212-27-57	354
3⅜	⅞	1212-33-7	172
	1⅜	1212-33-13	192
	1⅞	1212-33-17	212
	2⅜	1212-33-23	233
	2⅞	1212-33-27	253
	3⅜	1212-33-33	273
	3⅞	1212-33-37	293
	4⅞	1212-33-47	334
	5⅞	1212-33-57	374
3⅞	⅞	1212-37-7	192
	1⅜	1212-37-13	212
	1⅞	1212-37-17	233
	2⅜	1212-37-23	253
	2⅞	1212-37-27	273
	3⅜	1212-37-33	293
	3⅞	1212-37-37	313
	4⅞	1212-37-47	354
	5⅞	1212-37-57	394
4⅞	⅞	1212-47-7	233
	1⅜	1212-47-13	253
	1⅞	1212-47-17	273
	2⅜	1212-47-23	293
	2⅞	1212-47-27	313
	3⅜	1212-47-33	334
	3⅞	1212-47-37	354
	4⅞	1212-47-47	394
	5⅞	1212-47-57	435
5⅞	⅞	1212-57-7	273
	1⅜	1212-57-13	293
	1⅞	1212-57-17	313
	2⅜	1212-57-23	334
	2⅞	1212-57-27	354
	3⅜	1212-57-33	374
	3⅞	1212-57-37	394
	4⅞	1212-57-47	435
	5⅞	1212-57-57	475

Thickness of each plate is finish ground ± .001". Width and length finished square and parallel.

WHEN ORDERING, PLEASE SPECIFY:

1. Quantity & Item Number
2. No. 1, No. 2, No. 3 or No. 7 Steel (No. 7 Steel available standard only for plates up to and including 2⅞ thick)
3. L Dimension (Guide Pin Length)
4. Method of Shipment

Cavity Retainer Sets
11⅞ × 15" and 11⅞ × 17½

11⅞ × 15"

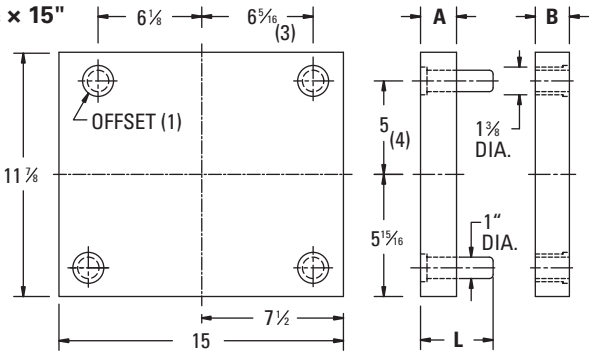

11⅞ × 17½

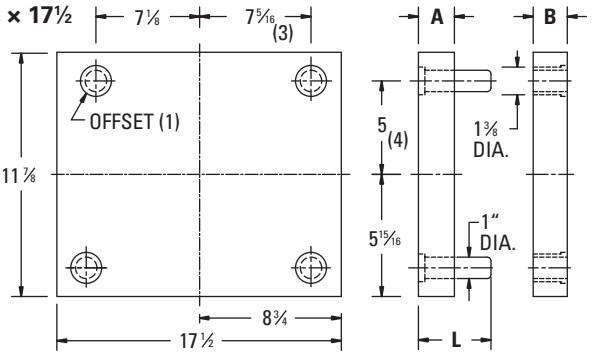

A	B	ITEM NUMBER	NET WT.
7/8	7/8	1215-7-7	89
	1 3/8	1215-7-13	114
	1 7/8	1215-7-17	139
	2 3/8	1215-7-23	164
	2 7/8	1215-7-27	190
	3 3/8	1215-7-33	215
	3 7/8	1215-7-37	240
	4 7/8	1215-7-47	291
	5 7/8	1215-7-57	341
1 3/8	7/8	1215-13-7	114
	1 3/8	1215-13-13	139
	1 7/8	1215-13-17	164
	2 3/8	1215-13-23	190
	2 7/8	1215-13-27	215
	3 3/8	1215-13-33	240
	3 7/8	1215-13-37	265
	4 7/8	1215-13-47	316
	5 7/8	1215-13-57	366
1 7/8	7/8	1215-17-7	139
	1 3/8	1215-17-13	164
	1 7/8	1215-17-17	190
	2 3/8	1215-17-23	215
	2 7/8	1215-17-27	240
	3 3/8	1215-17-33	265
	3 7/8	1215-17-37	291
	4 7/8	1215-17-47	341
	5 7/8	1215-17-57	392
2 3/8	7/8	1215-23-7	164
	1 3/8	1215-23-13	190
	1 7/8	1215-23-17	215
	2 3/8	1215-23-23	240
	2 7/8	1215-23-27	265
	3 3/8	1215-23-33	291
	3 7/8	1215-23-37	316
	4 7/8	1215-23-47	366
	5 7/8	1215-23-57	417
2 7/8	7/8	1215-27-7	190
	1 3/8	1215-27-13	215
	1 7/8	1215-27-17	240
	2 3/8	1215-27-23	265
	2 7/8	1215-27-27	291
	3 3/8	1215-27-33	316
	3 7/8	1215-27-37	341
	4 7/8	1215-27-47	392
	5 7/8	1215-27-57	442

A	B	ITEM NUMBER	NET WT.
3 3/8	7/8	1215-33-7	215
	1 3/8	1215-33-13	240
	1 7/8	1215-33-17	265
	2 3/8	1215-33-23	291
	2 7/8	1215-33-27	316
	3 3/8	1215-33-33	341
	3 7/8	1215-33-37	366
	4 7/8	1215-33-47	417
	5 7/8	1215-33-57	467
3 7/8	7/8	1215-37-7	240
	1 3/8	1215-37-13	265
	1 7/8	1215-37-17	291
	2 3/8	1215-37-23	316
	2 7/8	1215-37-27	341
	3 3/8	1215-37-33	366
	3 7/8	1215-37-37	392
	4 7/8	1215-37-47	442
	5 7/8	1215-37-57	492
4 7/8	7/8	1215-47-7	291
	1 3/8	1215-47-13	316
	1 7/8	1215-47-17	341
	2 3/8	1215-47-23	366
	2 7/8	1215-47-27	392
	3 3/8	1215-47-33	417
	3 7/8	1215-47-37	442
	4 7/8	1215-47-47	492
	5 7/8	1215-47-57	543
5 7/8	7/8	1215-57-7	341
	1 3/8	1215-57-13	366
	1 7/8	1215-57-17	392
	2 3/8	1215-57-23	417
	2 7/8	1215-57-27	442
	3 3/8	1215-57-33	467
	3 7/8	1215-57-37	492
	4 7/8	1215-57-47	543
	5 7/8	1215-57-57	593

A	B	ITEM NUMBER	NET WT.
7/8	7/8	1217-7-7	104
	1 3/8	1217-7-13	133
	1 7/8	1217-7-17	162
	2 3/8	1217-7-23	192
	2 7/8	1217-7-27	221
	3 3/8	1217-7-33	251
	3 7/8	1217-7-37	280
	4 7/8	1217-7-47	339
	5 7/8	1217-7-57	398
1 3/8	7/8	1217-13-7	133
	1 3/8	1217-13-13	162
	1 7/8	1217-13-17	192
	2 3/8	1217-13-23	221
	2 7/8	1217-13-27	251
	3 3/8	1217-13-33	280
	3 7/8	1217-13-37	310
	4 7/8	1217-13-47	368
	5 7/8	1217-13-57	427
1 7/8	7/8	1217-17-7	162
	1 3/8	1217-17-13	192
	1 7/8	1217-17-17	221
	2 3/8	1217-17-23	251
	2 7/8	1217-17-27	280
	3 3/8	1217-17-33	310
	3 7/8	1217-17-37	339
	4 7/8	1217-17-47	398
	5 7/8	1217-17-57	457
2 3/8	7/8	1217-23-7	192
	1 3/8	1217-23-13	221
	1 7/8	1217-23-17	251
	2 3/8	1217-23-23	280
	2 7/8	1217-23-27	310
	3 3/8	1217-23-33	339
	3 7/8	1217-23-37	368
	4 7/8	1217-23-47	427
	5 7/8	1217-23-57	486

A	B	ITEM NUMBER	NET WT.
2 7/8	7/8	1217-27-7	221
	1 3/8	1217-27-13	251
	1 7/8	1217-27-17	280
	2 3/8	1217-27-23	310
	2 7/8	1217-27-27	339
	3 3/8	1217-27-33	368
	3 7/8	1217-27-37	398
	4 7/8	1217-27-47	457
	5 7/8	1217-27-57	516
3 3/8	7/8	1217-33-7	251
	1 3/8	1217-33-13	280
	1 7/8	1217-33-17	310
	2 3/8	1217-33-23	339
	2 7/8	1217-33-27	368
	3 3/8	1217-33-33	398
	3 7/8	1217-33-37	427
	4 7/8	1217-33-47	486
	5 7/8	1217-33-57	545
3 7/8	7/8	1217-37-7	280
	1 3/8	1217-37-13	310
	1 7/8	1217-37-17	339
	2 3/8	1217-37-23	368
	2 7/8	1217-37-27	398
	3 3/8	1217-37-33	427
	3 7/8	1217-37-37	457
	4 7/8	1217-37-47	516
	5 7/8	1217-37-57	575
4 7/8	7/8	1217-47-7	339
	1 3/8	1217-47-13	368
	1 7/8	1217-47-17	398
	2 3/8	1217-47-23	427
	2 7/8	1217-47-27	457
	3 3/8	1217-47-33	486
	3 7/8	1217-47-37	516
	4 7/8	1217-47-47	575
	5 7/8	1217-47-57	633
5 7/8	7/8	1217-57-7	398
	1 3/8	1217-57-13	427
	1 7/8	1217-57-17	457
	2 3/8	1217-57-23	486
	2 7/8	1217-57-27	516
	3 3/8	1217-57-33	545
	3 7/8	1217-57-37	575
	4 7/8	1217-57-47	633
	5 7/8	1217-57-57	692

Thickness of each plate is finish ground ± .001". Width and length finished square and parallel.

WHEN ORDERING, PLEASE SPECIFY:

1. Quantity & Item Number
2. No. 1, No. 2, No. 3 or No. 7 Steel (No. 7 Steel available standard only for plates up to and including 2⅞ thick)
3. L Dimension (Guide Pin Length)
4. Method of Shipment

SPECIAL ORDER SIZES: Please contact DME.

Cavity Retainer Sets
11⅞ × 20" and 11⅞ × 23½

11⅞ × 20"

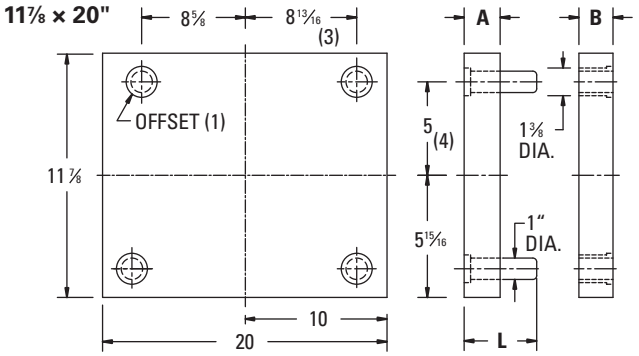

A	B	ITEM NUMBER	NET WT.
7/8	⅞	1220-7-7	118
	1⅜	1220-7-13	152
	1⅞	1220-7-17	186
	2⅜	1220-7-23	219
	2⅞	1220-7-27	253
	3⅜	1220-7-33	286
	3⅞	1220-7-37	320
	4⅞	1220-7-47	387
	5⅞	1220-7-57	455
1 3/8	⅞	1220-13-7	152
	1⅜	1220-13-13	186
	1⅞	1220-13-17	219
	2⅜	1220-13-23	253
	2⅞	1220-13-27	286
	3⅜	1220-13-33	320
	3⅞	1220-13-37	354
	4⅞	1220-13-47	421
	5⅞	1220-13-57	488
1 7/8	⅞	1220-17-7	186
	1⅜	1220-17-13	219
	1⅞	1220-17-17	253
	2⅜	1220-17-23	286
	2⅞	1220-17-27	320
	3⅜	1220-17-33	354
	3⅞	1220-17-37	387
	4⅞	1220-17-47	455
	5⅞	1220-17-57	522
2 3/8	⅞	1220-23-7	219
	1⅜	1220-23-13	253
	1⅞	1220-23-17	286
	2⅜	1220-23-23	320
	2⅞	1220-23-27	354
	3⅜	1220-23-33	387
	3⅞	1220-23-37	421
	4⅞	1220-23-47	488
	5⅞	1220-23-57	556
2 7/8	⅞	1220-27-7	253
	1⅜	1220-27-13	286
	1⅞	1220-27-17	320
	2⅜	1220-27-23	354
	2⅞	1220-27-27	387
	3⅜	1220-27-33	421
	3⅞	1220-27-37	455
	4⅞	1220-27-47	522
	5⅞	1220-27-57	589

A	B	ITEM NUMBER	NET WT.
3 3/8	⅞	1220-33-7	286
	1⅜	1220-33-13	320
	1⅞	1220-33-17	354
	2⅜	1220-33-23	387
	2⅞	1220-33-27	421
	3⅜	1220-33-33	455
	3⅞	1220-33-37	488
	4⅞	1220-33-47	556
	5⅞	1220-33-57	623
3 7/8	⅞	1220-37-7	320
	1⅜	1220-37-13	354
	1⅞	1220-37-17	387
	2⅜	1220-37-23	421
	2⅞	1220-37-27	455
	3⅜	1220-37-33	488
	3⅞	1220-37-37	522
	4⅞	1220-37-47	589
	5⅞	1220-37-57	656
4 7/8	⅞	1220-47-7	387
	1⅜	1220-47-13	421
	1⅞	1220-47-17	455
	2⅜	1220-47-23	488
	2⅞	1220-47-27	522
	3⅜	1220-47-33	556
	3⅞	1220-47-37	589
	4⅞	1220-47-47	656
	5⅞	1220-47-57	724
5 7/8	⅞	1220-57-7	455
	1⅜	1220-57-13	488
	1⅞	1220-57-17	522
	2⅜	1220-57-23	556
	2⅞	1220-57-27	589
	3⅜	1220-57-33	623
	3⅞	1220-57-37	656
	4⅞	1220-57-47	724
	5⅞	1220-57-57	791

11⅞ × 23½

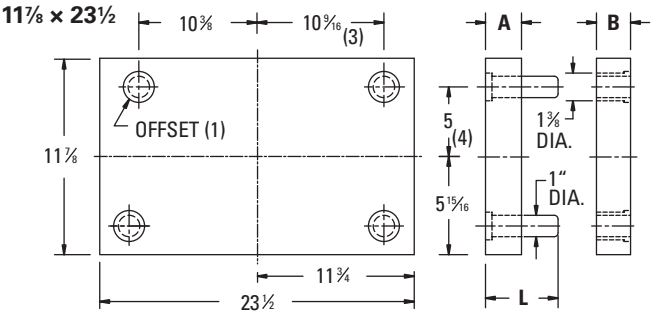

A	B	ITEM NUMBER	NET WT.
1 3/8	1⅜	1223-13-13	218
	1⅞	1223-13-17	257
	2⅜	1223-13-23	297
	2⅞	1223-13-27	336
	3⅜	1223-13-33	376
	3⅞	1223-13-37	416
	4⅞	1223-13-47	495
	5⅞	1223-13-57	574
1 7/8	1⅜	1223-17-13	257
	1⅞	1223-17-17	297
	2⅜	1223-17-23	336
	2⅞	1223-17-27	376
	3⅜	1223-17-33	416
	3⅞	1223-17-37	455
	4⅞	1223-17-47	534
	5⅞	1223-17-57	613
2 3/8	1⅜	1223-23-13	297
	1⅞	1223-23-17	336
	2⅜	1223-23-23	376
	2⅞	1223-23-27	416
	3⅜	1223-23-33	455
	3⅞	1223-23-37	495
	4⅞	1223-23-47	574
	5⅞	1223-23-57	653
2 7/8	1⅜	1223-27-13	336
	1⅞	1223-27-17	376
	2⅜	1223-27-23	416
	2⅞	1223-27-27	455
	3⅜	1223-27-33	495
	3⅞	1223-27-37	534
	4⅞	1223-27-47	613
	5⅞	1223-27-57	692

A	B	ITEM NUMBER	NET WT.
3 3/8	1⅜	1223-33-13	376
	1⅞	1223-33-17	416
	2⅜	1223-33-23	455
	2⅞	1223-33-27	495
	3⅜	1223-33-33	534
	3⅞	1223-33-37	574
	4⅞	1223-33-47	653
	5⅞	1223-33-57	732
3 7/8	1⅜	1223-37-13	416
	1⅞	1223-37-17	455
	2⅜	1223-37-23	495
	2⅞	1223-37-27	534
	3⅜	1223-37-33	574
	3⅞	1223-37-37	613
	4⅞	1223-37-47	692
	5⅞	1223-37-57	771
4 7/8	1⅜	1223-47-13	495
	1⅞	1223-47-17	534
	2⅜	1223-47-23	574
	2⅞	1223-47-27	613
	3⅜	1223-47-33	653
	3⅞	1223-47-37	692
	4⅞	1223-47-47	771
	5⅞	1223-47-57	850
5 7/8	1⅜	1223-57-13	574
	1⅞	1223-57-17	613
	2⅜	1223-57-23	653
	2⅞	1223-57-27	692
	3⅜	1223-57-33	732
	3⅞	1223-57-37	771
	4⅞	1223-57-47	850
	5⅞	1223-57-57	929

Thickness of each plate is finish ground ± .001". Width and length finished square and parallel.

WHEN ORDERING, PLEASE SPECIFY:

1. Quantity & Item Number
2. No. 1, No. 2, No. 3 or No. 7 Steel (No. 7 Steel available standard only for plates up to and including 2⅞ thick)
3. L Dimension (Guide Pin Length)
4. Method of Shipment

Cavity Retainer Sets
11⅞ × 29½ and 13⅜ × 15"

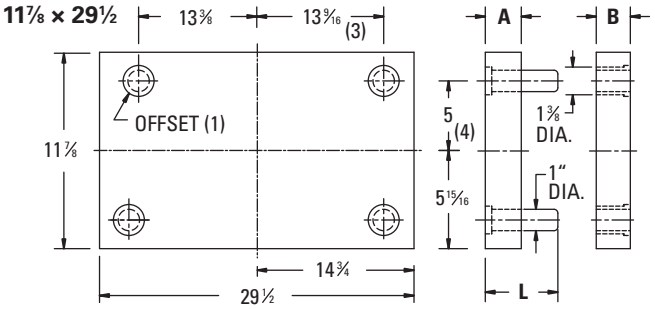

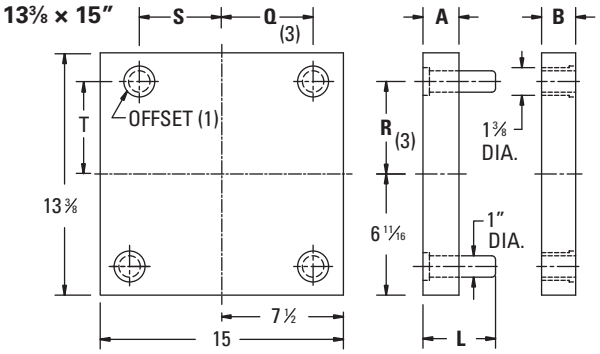

A	B	ITEM NUMBER	NET WT.
1⅜	1⅜	1229-13-13	273
	1⅞	1229-13-17	323
	2⅜	1229-13-23	373
	2⅞	1229-13-27	422
	3⅜	1229-13-33	472
	3⅞	1229-13-37	522
	4⅞	1229-13-47	621
	5⅞	1229-13-57	720
1⅞	1⅜	1229-17-13	323
	1⅞	1229-17-17	373
	2⅜	1229-17-23	422
	2⅞	1229-17-27	472
	3⅜	1229-17-33	522
	3⅞	1229-17-37	571
	4⅞	1229-17-47	670
	5⅞	1229-17-57	770
2⅜	1⅜	1229-23-13	373
	1⅞	1229-23-17	422
	2⅜	1229-23-23	472
	2⅞	1229-23-27	522
	3⅜	1229-23-33	571
	3⅞	1229-23-37	621
	4⅞	1229-23-47	720
	5⅞	1229-23-57	819
2⅞	1⅜	1229-27-13	422
	1⅞	1229-27-17	472
	2⅜	1229-27-23	522
	2⅞	1229-27-27	571
	3⅜	1229-27-33	621
	3⅞	1229-27-37	670
	4⅞	1229-27-47	770
	5⅞	1229-27-57	869

A	B	ITEM NUMBER	NET WT.
3⅜	1⅜	1229-33-13	472
	1⅞	1229-33-17	522
	2⅜	1229-33-23	571
	2⅞	1229-33-27	621
	3⅜	1229-33-33	670
	3⅞	1229-33-37	720
	4⅞	1229-33-47	819
	5⅞	1229-33-57	918
3⅞	1⅜	1229-37-13	522
	1⅞	1229-37-17	571
	2⅜	1229-37-23	621
	2⅞	1229-37-27	670
	3⅜	1229-37-33	720
	3⅞	1229-37-37	770
	4⅞	1229-37-47	869
	5⅞	1229-37-57	968
4⅞	1⅜	1229-47-13	621
	1⅞	1229-47-17	670
	2⅜	1229-47-23	720
	2⅞	1229-47-27	770
	3⅜	1229-47-33	819
	3⅞	1229-47-37	869
	4⅞	1229-47-47	968
	5⅞	1229-47-57	1067
5⅞	1⅜	1229-57-13	720
	1⅞	1229-57-17	770
	2⅜	1229-57-23	819
	2⅞	1229-57-27	869
	3⅜	1229-57-33	918
	3⅞	1229-57-37	968
	4⅞	1229-57-47	1067
	5⅞	1229-57-57	1167

Thickness of each plate is finish ground ± .001".
Width and length finished square and parallel.

WHEN ORDERING, PLEASE SPECIFY:

1. Quantity & Item Number
1a. (1315 only) Type A or C Pin Locations
2. No. 1, No. 2, No. 3 or No. 7 Steel (No. 7 Steel available standard only for plates up to and including 2⅞ thick)
3. L Dimension (Guide Pin Length)
4. Method of Shipment

SPECIAL ORDER SIZES: Please contact DME.

AVAILABLE WITH CHOICE OF LEADER PIN LOCATION:

TYPE A For injection molds or die cast dies

TYPE C For compression molds

DIM	TYPE A	TYPE C
Q	6⁵⁄₁₆	6½
R	5¹¹⁄₁₆	4¼
S	6⅛	6½
T	5¹¹⁄₁₆	4¹⁄₁₆

A	B	ITEM NUMBER	NET WT.
⅞	⅞	1315-7-7	100
	1⅜	1315-7-13	128
	1⅞	1315-7-17	157
	2⅜	1315-7-23	185
	2⅞	1315-7-27	214
	3⅜	1315-7-33	242
	3⅞	1315-7-37	270
	4⅞	1315-7-47	327
	5⅞	1315-7-57	384
1⅜	⅞	1315-13-7	128
	1⅜	1315-13-13	157
	1⅞	1315-13-17	185
	2⅜	1315-13-23	214
	2⅞	1315-13-27	242
	3⅜	1315-13-33	270
	3⅞	1315-13-37	299
	4⅞	1315-13-47	356
	5⅞	1315-13-57	413
1⅞	⅞	1315-17-7	157
	1⅜	1315-17-13	185
	1⅞	1315-17-17	214
	2⅜	1315-17-23	242
	2⅞	1315-17-27	270
	3⅜	1315-17-33	299
	3⅞	1315-17-37	327
	4⅞	1315-17-47	384
	5⅞	1315-17-57	441
2⅜	⅞	1315-23-7	185
	1⅜	1315-23-13	214
	1⅞	1315-23-17	242
	2⅜	1315-23-23	270
	2⅞	1315-23-27	299
	3⅜	1315-23-33	327
	3⅞	1315-23-37	356
	4⅞	1315-23-47	413
	5⅞	1315-23-57	469

A	B	ITEM NUMBER	NET WT.
2⅞	⅞	1315-27-7	214
	1⅜	1315-27-13	242
	1⅞	1315-27-17	270
	2⅜	1315-27-23	299
	2⅞	1315-27-27	327
	3⅜	1315-27-33	356
	3⅞	1315-27-37	384
	4⅞	1315-27-47	441
	5⅞	1315-27-57	498
3⅜	⅞	1315-33-7	242
	1⅜	1315-33-13	270
	1⅞	1315-33-17	299
	2⅜	1315-33-23	327
	2⅞	1315-33-27	356
	3⅜	1315-33-33	384
	3⅞	1315-33-37	413
	4⅞	1315-33-47	469
	5⅞	1315-33-57	526
3⅞	⅞	1315-37-7	270
	1⅜	1315-37-13	299
	1⅞	1315-37-17	327
	2⅜	1315-37-23	356
	2⅞	1315-37-27	384
	3⅜	1315-37-33	413
	3⅞	1315-37-37	441
	4⅞	1315-37-47	498
	5⅞	1315-37-57	555
4⅞	⅞	1315-47-7	327
	1⅜	1315-47-13	356
	1⅞	1315-47-17	384
	2⅜	1315-47-23	413
	2⅞	1315-47-27	441
	3⅜	1315-47-33	469
	3⅞	1315-47-37	498
	4⅞	1315-47-47	555
	5⅞	1315-47-57	612
5⅞	⅞	1315-57-7	384
	1⅜	1315-57-13	413
	1⅞	1315-57-17	441
	2⅜	1315-57-23	469
	2⅞	1315-57-27	498
	3⅜	1315-57-33	526
	3⅞	1315-57-37	555
	4⅞	1315-57-47	612
	5⅞	1315-57-57	668

Cavity Retainer Sets
13⅜ × 18" and 13⅜ × 20¾

13⅜ × 18"

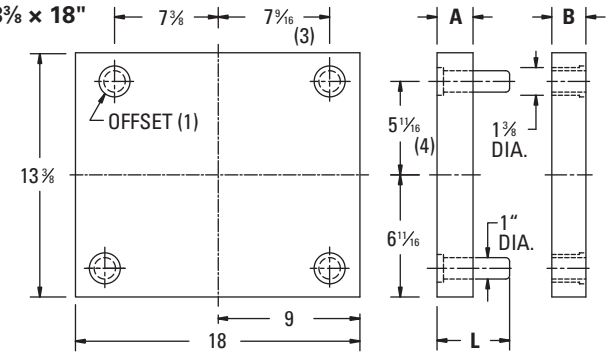

A	B	ITEM NUMBER	NET WT.
7/8	7/8	1318-7-7	120
	1 3/8	1318-7-13	154
	1 7/8	1318-7-17	188
	2 3/8	1318-7-23	222
	2 7/8	1318-7-27	256
	3 3/8	1318-7-33	290
	3 7/8	1318-7-37	324
	4 7/8	1318-7-47	393
	5 7/8	1318-7-57	461
1 3/8	7/8	1318-13-7	154
	1 3/8	1318-13-13	188
	1 7/8	1318-13-17	222
	2 3/8	1318-13-23	256
	2 7/8	1318-13-27	290
	3 3/8	1318-13-33	324
	3 7/8	1318-13-37	359
	4 7/8	1318-13-47	427
	5 7/8	1318-13-57	495
1 7/8	7/8	1318-17-7	188
	1 3/8	1318-17-13	222
	1 7/8	1318-17-17	256
	2 3/8	1318-17-23	290
	2 7/8	1318-17-27	324
	3 3/8	1318-17-33	359
	3 7/8	1318-17-37	393
	4 7/8	1318-17-47	461
	5 7/8	1318-17-57	529
2 3/8	7/8	1318-23-7	222
	1 3/8	1318-23-13	256
	1 7/8	1318-23-17	290
	2 3/8	1318-23-23	324
	2 7/8	1318-23-27	359
	3 3/8	1318-23-33	393
	3 7/8	1318-23-37	427
	4 7/8	1318-23-47	495
	5 7/8	1318-23-57	563
2 7/8	7/8	1318-27-7	256
	1 3/8	1318-27-13	290
	1 7/8	1318-27-17	324
	2 3/8	1318-27-23	359
	2 7/8	1318-27-27	393
	3 3/8	1318-27-33	427
	3 7/8	1318-27-37	461
	4 7/8	1318-27-47	529
	5 7/8	1318-27-57	597

A	B	ITEM NUMBER	NET WT.
3 3/8	7/8	1318-33-7	290
	1 3/8	1318-33-13	324
	1 7/8	1318-33-17	359
	2 3/8	1318-33-23	393
	2 7/8	1318-33-27	427
	3 3/8	1318-33-33	461
	3 7/8	1318-33-37	495
	4 7/8	1318-33-47	563
	5 7/8	1318-33-57	631
3 7/8	7/8	1318-37-7	324
	1 3/8	1318-37-13	359
	1 7/8	1318-37-17	393
	2 3/8	1318-37-23	427
	2 7/8	1318-37-27	461
	3 3/8	1318-37-33	495
	3 7/8	1318-37-37	529
	4 7/8	1318-37-47	597
	5 7/8	1318-37-57	665
4 7/8	7/8	1318-47-7	393
	1 3/8	1318-47-13	427
	1 7/8	1318-47-17	461
	2 3/8	1318-47-23	495
	2 7/8	1318-47-27	529
	3 3/8	1318-47-33	563
	3 7/8	1318-47-37	597
	4 7/8	1318-47-47	665
	5 7/8	1318-47-57	734
5 7/8	7/8	1318-57-7	461
	1 3/8	1318-57-13	495
	1 7/8	1318-57-17	529
	2 3/8	1318-57-23	563
	2 7/8	1318-57-27	597
	3 3/8	1318-57-33	631
	3 7/8	1318-57-37	665
	4 7/8	1318-57-47	734
	5 7/8	1318-57-57	802

13⅜ × 20¾

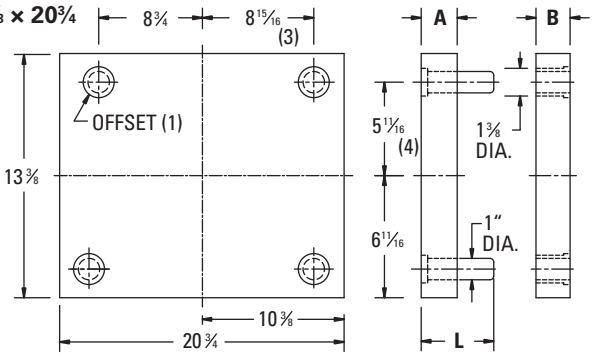

A	B	ITEM NUMBER	NET WT.
7/8	7/8	1321-7-7	138
	1 3/8	1321-7-13	177
	1 7/8	1321-7-17	217
	2 3/8	1321-7-23	256
	2 7/8	1321-7-27	295
	3 3/8	1321-7-33	335
	3 7/8	1321-7-37	374
	4 7/8	1321-7-47	453
	5 7/8	1321-7-57	531
1 3/8	7/8	1321-13-7	177
	1 3/8	1321-13-13	217
	1 7/8	1321-13-17	256
	2 3/8	1321-13-23	295
	2 7/8	1321-13-27	335
	3 3/8	1321-13-33	374
	3 7/8	1321-13-37	413
	4 7/8	1321-13-47	492
	5 7/8	1321-13-57	570
1 7/8	7/8	1321-17-7	217
	1 3/8	1321-17-13	256
	1 7/8	1321-17-17	295
	2 3/8	1321-17-23	335
	2 7/8	1321-17-27	374
	3 3/8	1321-17-33	413
	3 7/8	1321-17-37	453
	4 7/8	1321-17-47	531
	5 7/8	1321-17-57	610
2 3/8	7/8	1321-23-7	256
	1 3/8	1321-23-13	295
	1 7/8	1321-23-17	335
	2 3/8	1321-23-23	374
	2 7/8	1321-23-27	413
	3 3/8	1321-23-33	453
	3 7/8	1321-23-37	492
	4 7/8	1321-23-47	570
	5 7/8	1321-23-57	649

A	B	ITEM NUMBER	NET WT.
2 7/8	7/8	1321-27-7	295
	1 3/8	1321-27-13	335
	1 7/8	1321-27-17	374
	2 3/8	1321-27-23	413
	2 7/8	1321-27-27	453
	3 3/8	1321-27-33	492
	3 7/8	1321-27-37	531
	4 7/8	1321-27-47	610
	5 7/8	1321-27-57	688
3 3/8	7/8	1321-33-7	335
	1 3/8	1321-33-13	374
	1 7/8	1321-33-17	413
	2 3/8	1321-33-23	453
	2 7/8	1321-33-27	492
	3 3/8	1321-33-33	531
	3 7/8	1321-33-37	570
	4 7/8	1321-33-47	649
	5 7/8	1321-33-57	728
3 7/8	7/8	1321-37-7	374
	1 3/8	1321-37-13	413
	1 7/8	1321-37-17	453
	2 3/8	1321-37-23	492
	2 7/8	1321-37-27	531
	3 3/8	1321-37-33	570
	3 7/8	1321-37-37	610
	4 7/8	1321-37-47	688
	5 7/8	1321-37-57	767
4 7/8	7/8	1321-47-7	453
	1 3/8	1321-47-13	492
	1 7/8	1321-47-17	531
	2 3/8	1321-47-23	570
	2 7/8	1321-47-27	610
	3 3/8	1321-47-33	649
	3 7/8	1321-47-37	688
	4 7/8	1321-47-47	767
	5 7/8	1321-47-57	846
5 7/8	7/8	1321-57-7	531
	1 3/8	1321-57-13	570
	1 7/8	1321-57-17	610
	2 3/8	1321-57-23	649
	2 7/8	1321-57-27	688
	3 3/8	1321-57-33	728
	3 7/8	1321-57-37	767
	4 7/8	1321-57-47	846
	5 7/8	1321-57-57	924

Thickness of each plate is finish ground ± .001". Width and length finished square and parallel.

WHEN ORDERING, PLEASE SPECIFY:

1. Quantity & Item Number
2. No. 1, No. 2, No. 3 or No. 7 Steel (No. 7 Steel available standard only for plates up to and including 2⅞ thick)
3. L Dimension (Guide Pin Length)
4. Method of Shipment

Cavity Retainer Sets
13⅜ × 23½ and 13⅜ × 26"

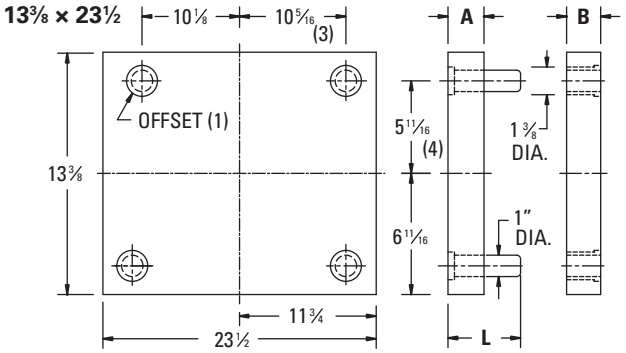

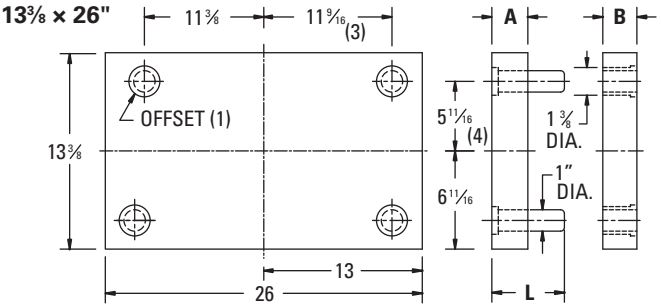

A	B	ITEM NUMBER	NET WT.
1⅜	1⅜	1323-13-13	245
	1⅞	1323-13-17	290
	2⅜	1323-13-23	334
	2⅞	1323-13-27	379
	3⅜	1323-13-33	423
	3⅞	1323-13-37	468
	4⅞	1323-13-47	557
	5⅞	1323-13-57	646
1⅞	1⅜	1323-17-13	290
	1⅞	1323-17-17	334
	2⅜	1323-17-23	379
	2⅞	1323-17-27	423
	3⅜	1323-17-33	468
	3⅞	1323-17-37	512
	4⅞	1323-17-47	602
	5⅞	1323-17-57	691
2⅜	1⅜	1323-23-13	334
	1⅞	1323-23-17	379
	2⅜	1323-23-23	423
	2⅞	1323-23-27	468
	3⅜	1323-23-33	512
	3⅞	1323-23-37	557
	4⅞	1323-23-47	646
	5⅞	1323-23-57	735
2⅞	1⅜	1323-27-13	379
	1⅞	1323-27-17	423
	2⅜	1323-27-23	468
	2⅞	1323-27-27	512
	3⅜	1323-27-33	557
	3⅞	1323-27-37	602
	4⅞	1323-27-47	691
	5⅞	1323-27-57	780

A	B	ITEM NUMBER	NET WT.
3⅜	1⅜	1323-33-13	423
	1⅞	1323-33-17	468
	2⅜	1323-33-23	512
	2⅞	1323-33-27	557
	3⅜	1323-33-33	602
	3⅞	1323-33-37	646
	4⅞	1323-33-47	735
	5⅞	1323-33-57	824
3⅞	1⅜	1323-37-13	468
	1⅞	1323-37-17	512
	2⅜	1323-37-23	557
	2⅞	1323-37-27	602
	3⅜	1323-37-33	646
	3⅞	1323-37-37	691
	4⅞	1323-37-47	780
	5⅞	1323-37-57	869
4⅞	1⅜	1323-47-13	557
	1⅞	1323-47-17	602
	2⅜	1323-47-23	646
	2⅞	1323-47-27	691
	3⅜	1323-47-33	735
	3⅞	1323-47-37	780
	4⅞	1323-47-47	869
	5⅞	1323-47-57	958
5⅞	1⅜	1323-57-13	646
	1⅞	1323-57-17	691
	2⅜	1323-57-23	735
	2⅞	1323-57-27	780
	3⅜	1323-57-33	824
	3⅞	1323-57-37	869
	4⅞	1323-57-47	958
	5⅞	1323-57-57	1047

A	B	ITEM NUMBER	NET WT.
1⅜	1⅜	1326-13-13	271
	1⅞	1326-13-17	321
	2⅜	1326-13-23	370
	2⅞	1326-13-27	419
	3⅜	1326-13-33	468
	3⅞	1326-13-37	518
	4⅞	1326-13-47	616
	5⅞	1326-13-57	715
1⅞	1⅜	1326-17-13	321
	1⅞	1326-17-17	370
	2⅜	1326-17-23	419
	2⅞	1326-17-27	468
	3⅜	1326-17-33	518
	3⅞	1326-17-37	567
	4⅞	1326-17-47	666
	5⅞	1326-17-57	764
2⅜	1⅜	1326-23-13	370
	1⅞	1326-23-17	419
	2⅜	1326-23-23	468
	2⅞	1326-23-27	518
	3⅜	1326-23-33	567
	3⅞	1326-23-37	616
	4⅞	1326-23-47	715
	5⅞	1326-23-57	813
2⅞	1⅜	1326-27-13	419
	1⅞	1326-27-17	468
	2⅜	1326-27-23	518
	2⅞	1326-27-27	567
	3⅜	1326-27-33	616
	3⅞	1326-27-37	666
	4⅞	1326-27-47	764
	5⅞	1326-27-57	863

A	B	ITEM NUMBER	NET WT.
3⅜	1⅜	1326-33-13	468
	1⅞	1326-33-17	518
	2⅜	1326-33-23	567
	2⅞	1326-33-27	616
	3⅜	1326-33-33	666
	3⅞	1326-33-37	715
	4⅞	1326-33-47	813
	5⅞	1326-33-57	912
3⅞	1⅜	1326-37-13	518
	1⅞	1326-37-17	567
	2⅜	1326-37-23	616
	2⅞	1326-37-27	666
	3⅜	1326-37-33	715
	3⅞	1326-37-37	764
	4⅞	1326-37-47	863
	5⅞	1326-37-57	961
4⅞	1⅜	1326-47-13	616
	1⅞	1326-47-17	666
	2⅜	1326-47-23	715
	2⅞	1326-47-27	764
	3⅜	1326-47-33	813
	3⅞	1326-47-37	863
	4⅞	1326-47-47	961
	5⅞	1326-47-57	1060
5⅞	1⅜	1326-57-13	715
	1⅞	1326-57-17	764
	2⅜	1326-57-23	813
	2⅞	1326-57-27	863
	3⅜	1326-57-33	912
	3⅞	1326-57-37	961
	4⅞	1326-57-47	1060
	5⅞	1326-57-57	1158

Thickness of each plate is finish ground ± .001". Width and length finished square and parallel.

WHEN ORDERING, PLEASE SPECIFY:

1. Quantity & Item Number
2. No. 1, No. 2, No. 3 or No. 7 Steel (No. 7 Steel available standard only for plates up to and including 2⅞ thick)
3. L Dimension (Guide Pin Length)
4. Method of Shipment

Cavity Retainer Sets
13⅜ × 29½ and 14⅞ × 17⅞

13⅜ × 29½

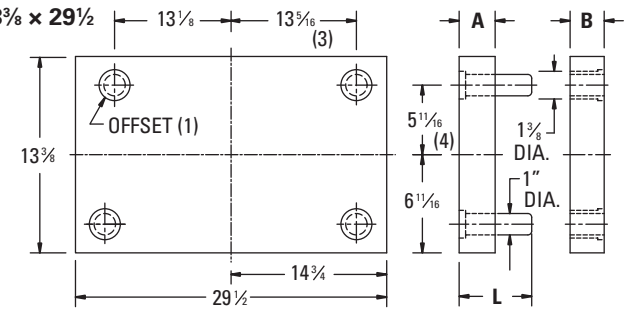

A	B	ITEM NUMBER	NET WT.
1⅜	1⅜	1329-13-13	308
	1⅞	1329-13-17	364
	2⅜	1329-13-23	420
	2⅞	1329-13-27	476
	3⅜	1329-13-33	531
	3⅞	1329-13-37	587
	4⅞	1329-13-47	699
	5⅞	1329-13-57	811
1⅞	1⅜	1329-17-13	364
	1⅞	1329-17-17	420
	2⅜	1329-17-23	476
	2⅞	1329-17-27	531
	3⅜	1329-17-33	587
	3⅞	1329-17-37	643
	4⅞	1329-17-47	755
	5⅞	1329-17-57	867
2⅜	1⅜	1329-23-13	420
	1⅞	1329-23-17	476
	2⅜	1329-23-23	531
	2⅞	1329-23-27	587
	3⅜	1329-23-33	643
	3⅞	1329-23-37	699
	4⅞	1329-23-47	811
	5⅞	1329-23-57	923
2⅞	1⅜	1329-27-13	476
	1⅞	1329-27-17	531
	2⅜	1329-27-23	587
	2⅞	1329-27-27	643
	3⅜	1329-27-33	699
	3⅞	1329-27-37	755
	4⅞	1329-27-47	867
	5⅞	1329-27-57	979

A	B	ITEM NUMBER	NET WT.
3⅜	1⅜	1329-33-13	531
	1⅞	1329-33-17	587
	2⅜	1329-33-23	643
	2⅞	1329-33-27	699
	3⅜	1329-33-33	755
	3⅞	1329-33-37	811
	4⅞	1329-33-47	923
	5⅞	1329-33-57	1034
3⅞	1⅜	1329-37-13	587
	1⅞	1329-37-17	643
	2⅜	1329-37-23	699
	2⅞	1329-37-27	755
	3⅜	1329-37-33	811
	3⅞	1329-37-37	867
	4⅞	1329-37-47	979
	5⅞	1329-37-57	1090
4⅞	1⅜	1329-47-13	699
	1⅞	1329-47-17	755
	2⅜	1329-47-23	811
	2⅞	1329-47-27	867
	3⅜	1329-47-33	923
	3⅞	1329-47-37	979
	4⅞	1329-47-47	1090
	5⅞	1329-47-57	1202
5⅞	1⅜	1329-57-13	811
	1⅞	1329-57-17	867
	2⅜	1329-57-23	923
	2⅞	1329-57-27	979
	3⅜	1329-57-33	1034
	3⅞	1329-57-37	1090
	4⅞	1329-57-47	1202
	5⅞	1329-57-57	1314

14⅞ × 17⅞

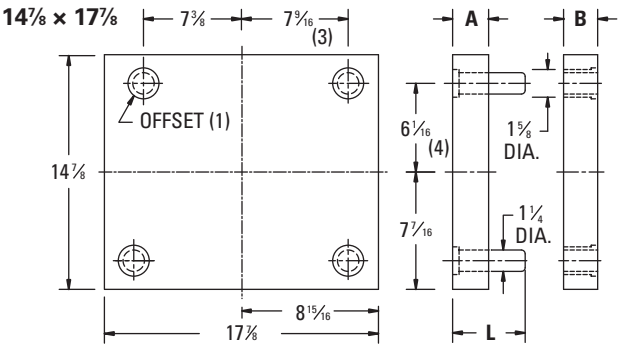

A	B	ITEM NUMBER	NET WT.
⅞	⅞	1518-7-7	132
	1⅜	1518-7-13	170
	1⅞	1518-7-17	208
	2⅜	1518-7-23	245
	2⅞	1518-7-27	283
	3⅜	1518-7-33	321
	3⅞	1518-7-37	358
	4⅞	1518-7-47	434
	5⅞	1518-7-57	509
1⅜	⅞	1518-13-7	170
	1⅜	1518-13-13	208
	1⅞	1518-13-17	245
	2⅜	1518-13-23	283
	2⅞	1518-13-27	321
	3⅜	1518-13-33	358
	3⅞	1518-13-37	396
	4⅞	1518-13-47	471
	5⅞	1518-13-57	547
1⅞	⅞	1518-17-7	208
	1⅜	1518-17-13	245
	1⅞	1518-17-17	283
	2⅜	1518-17-23	321
	2⅞	1518-17-27	358
	3⅜	1518-17-33	396
	3⅞	1518-17-37	434
	4⅞	1518-17-47	509
	5⅞	1518-17-57	584
2⅜	⅞	1518-23-7	245
	1⅜	1518-23-13	283
	1⅞	1518-23-17	321
	2⅜	1518-23-23	358
	2⅞	1518-23-27	396
	3⅜	1518-23-33	434
	3⅞	1518-23-37	471
	4⅞	1518-23-47	547
	5⅞	1518-23-57	622

A	B	ITEM NUMBER	NET WT.
2⅞	⅞	1518-27-7	283
	1⅜	1518-27-13	321
	1⅞	1518-27-17	358
	2⅜	1518-27-23	396
	2⅞	1518-27-27	434
	3⅜	1518-27-33	471
	3⅞	1518-27-37	509
	4⅞	1518-27-47	584
	5⅞	1518-27-57	660
3⅜	⅞	1518-33-7	321
	1⅜	1518-33-13	358
	1⅞	1518-33-17	396
	2⅜	1518-33-23	434
	2⅞	1518-33-27	471
	3⅜	1518-33-33	509
	3⅞	1518-33-37	547
	4⅞	1518-33-47	622
	5⅞	1518-33-57	697
3⅞	⅞	1518-37-7	358
	1⅜	1518-37-13	396
	1⅞	1518-37-17	434
	2⅜	1518-37-23	471
	2⅞	1518-37-27	509
	3⅜	1518-37-33	547
	3⅞	1518-37-37	584
	4⅞	1518-37-47	660
	5⅞	1518-37-57	735
4⅞	⅞	1518-47-7	434
	1⅜	1518-47-13	471
	1⅞	1518-47-17	509
	2⅜	1518-47-23	547
	2⅞	1518-47-27	584
	3⅜	1518-47-33	622
	3⅞	1518-47-37	660
	4⅞	1518-47-47	735
	5⅞	1518-47-57	810
5⅞	⅞	1518-57-7	509
	1⅜	1518-57-13	547
	1⅞	1518-57-17	584
	2⅜	1518-57-23	622
	2⅞	1518-57-27	660
	3⅜	1518-57-33	697
	3⅞	1518-57-37	735
	4⅞	1518-57-47	810
	5⅞	1518-57-57	886

Thickness of each plate is finish ground ± .001". Width and length finished square and parallel.

WHEN ORDERING, PLEASE SPECIFY:

1. Quantity & Item Number
2. No. 1, No. 2, No. 3 or No. 7 Steel (No. 7 Steel available standard only for plates up to and including 2⅞ thick)
3. L Dimension (Guide Pin Length)
4. Method of Shipment

Cavity Retainer Sets
14⅞ × 23¾ and 14⅞ × 29½

14⅞ × 23¾

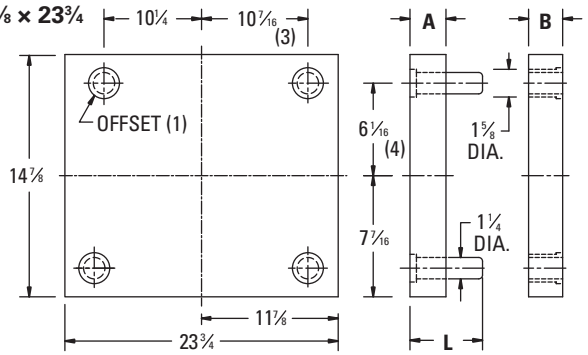

14⅞ × 29½

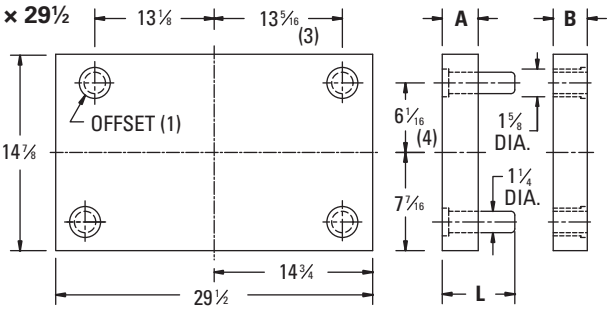

A	B	ITEM NUMBER	NET WT.
1⅜	1⅜	1524-13-13	276
	1⅞	1524-13-17	326
	2⅜	1524-13-23	376
	2⅞	1524-13-27	426
	3⅜	1524-13-33	476
	3⅞	1524-13-37	526
	4⅞	1524-13-47	626
	5⅞	1524-13-57	726
1⅞	1⅜	1524-17-13	326
	1⅞	1524-17-17	376
	2⅜	1524-17-23	426
	2⅞	1524-17-27	476
	3⅜	1524-17-33	526
	3⅞	1524-17-37	576
	4⅞	1524-17-47	676
	5⅞	1524-17-57	776
2⅜	1⅜	1524-23-13	376
	1⅞	1524-23-17	426
	2⅜	1524-23-23	476
	2⅞	1524-23-27	526
	3⅜	1524-23-33	576
	3⅞	1524-23-37	626
	4⅞	1524-23-47	726
	5⅞	1524-23-57	826
2⅞	1⅜	1524-27-13	426
	1⅞	1524-27-17	476
	2⅜	1524-27-23	526
	2⅞	1524-27-27	576
	3⅜	1524-27-33	626
	3⅞	1524-27-37	676
	4⅞	1524-27-47	776
	5⅞	1524-27-57	876

A	B	ITEM NUMBER	NET WT.
3⅜	1⅜	1524-33-13	476
	1⅞	1524-33-17	526
	2⅜	1524-33-23	576
	2⅞	1524-33-27	626
	3⅜	1524-33-33	676
	3⅞	1524-33-37	726
	4⅞	1524-33-47	826
	5⅞	1524-33-57	926
3⅞	1⅜	1524-37-13	526
	1⅞	1524-37-17	576
	2⅜	1524-37-23	626
	2⅞	1524-37-27	676
	3⅜	1524-37-33	726
	3⅞	1524-37-37	776
	4⅞	1524-37-47	876
	5⅞	1524-37-57	976
4⅞	1⅜	1524-47-13	626
	1⅞	1524-47-17	676
	2⅜	1524-47-23	726
	2⅞	1524-47-27	776
	3⅜	1524-47-33	826
	3⅞	1524-47-37	876
	4⅞	1524-47-47	976
	5⅞	1524-47-57	1076
5⅞	1⅜	1524-57-13	726
	1⅞	1524-57-17	776
	2⅜	1524-57-23	826
	2⅞	1524-57-27	876
	3⅜	1524-57-33	926
	3⅞	1524-57-37	976
	4⅞	1524-57-47	1076
	5⅞	1524-57-57	1176

A	B	ITEM NUMBER	NET WT.
1⅜	1⅜	1529-13-13	342
	1⅞	1529-13-17	405
	2⅜	1529-13-23	467
	2⅞	1529-13-27	529
	3⅜	1529-13-33	591
	3⅞	1529-13-37	653
	4⅞	1529-13-47	777
	5⅞	1529-13-57	902
1⅞	1⅜	1529-17-13	405
	1⅞	1529-17-17	467
	2⅜	1529-17-23	529
	2⅞	1529-17-27	591
	3⅜	1529-17-33	653
	3⅞	1529-17-37	715
	4⅞	1529-17-47	840
	5⅞	1529-17-57	964
2⅜	1⅜	1529-23-13	467
	1⅞	1529-23-17	529
	2⅜	1529-23-23	591
	2⅞	1529-23-27	653
	3⅜	1529-23-33	715
	3⅞	1529-23-37	777
	4⅞	1529-23-47	902
	5⅞	1529-23-57	1026
2⅞	1⅜	1529-27-13	529
	1⅞	1529-27-17	591
	2⅜	1529-27-23	653
	2⅞	1529-27-27	715
	3⅜	1529-27-33	777
	3⅞	1529-27-37	840
	4⅞	1529-27-47	964
	5⅞	1529-27-57	1088

A	B	ITEM NUMBER	NET WT.
3⅜	1⅜	1529-33-13	591
	1⅞	1529-33-17	653
	2⅜	1529-33-23	715
	2⅞	1529-33-27	777
	3⅜	1529-33-33	840
	3⅞	1529-33-37	902
	4⅞	1529-33-47	1026
	5⅞	1529-33-57	1150
3⅞	1⅜	1529-37-13	653
	1⅞	1529-37-17	715
	2⅜	1529-37-23	777
	2⅞	1529-37-27	840
	3⅜	1529-37-33	902
	3⅞	1529-37-37	964
	4⅞	1529-37-47	1088
	5⅞	1529-37-57	1213
4⅞	1⅜	1529-47-13	777
	1⅞	1529-47-17	840
	2⅜	1529-47-23	902
	2⅞	1529-47-27	964
	3⅜	1529-47-33	1026
	3⅞	1529-47-37	1088
	4⅞	1529-47-47	1213
	5⅞	1529-47-57	1337
5⅞	1⅜	1529-57-13	902
	1⅞	1529-57-17	964
	2⅜	1529-57-23	1026
	2⅞	1529-57-27	1088
	3⅜	1529-57-33	1150
	3⅞	1529-57-37	1213
	4⅞	1529-57-47	1337
	5⅞	1529-57-57	1461

Thickness of each plate is finish ground ± .001". Width and length finished square and parallel.

WHEN ORDERING, PLEASE SPECIFY:

1. Quantity & Item Number
2. No. 1, No. 2, No. 3 or No. 7 Steel (No. 7 Steel available standard only for plates up to and including 2⅞ thick)
3. L Dimension (Guide Pin Length)
4. Method of Shipment

Cavity Retainer Sets
15⅞ × 16" and 15⅞ × 20"

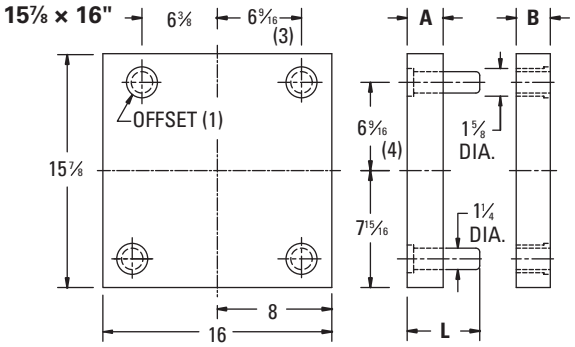

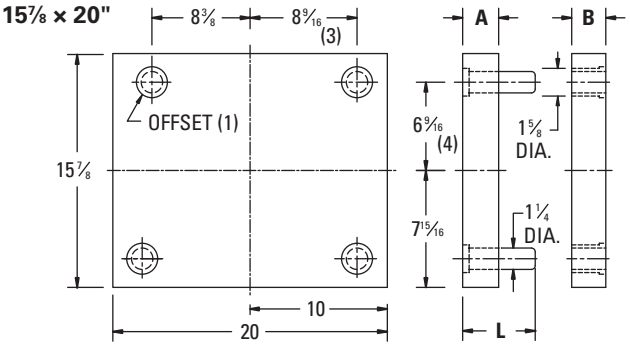

A	B	ITEM NUMBER	NET WT.
7/8	⅞	1616-7-7	126
	1⅜	1616-7-13	162
	1⅞	1616-7-17	198
	2⅜	1616-7-23	234
	2⅞	1616-7-27	270
	3⅜	1616-7-33	306
	3⅞	1616-7-37	342
	4⅞	1616-7-47	414
	5⅞	1616-7-57	486
1 3/8	⅞	1616-13-7	162
	1⅜	1616-13-13	198
	1⅞	1616-13-17	234
	2⅜	1616-13-23	270
	2⅞	1616-13-27	306
	3⅜	1616-13-33	342
	3⅞	1616-13-37	378
	4⅞	1616-13-47	450
	5⅞	1616-13-57	522
1 7/8	⅞	1616-17-7	198
	1⅜	1616-17-13	234
	1⅞	1616-17-17	270
	2⅜	1616-17-23	306
	2⅞	1616-17-27	342
	3⅜	1616-17-33	378
	3⅞	1616-17-37	414
	4⅞	1616-17-47	486
	5⅞	1616-17-57	558
2 3/8	⅞	1616-23-7	234
	1⅜	1616-23-13	270
	1⅞	1616-23-17	306
	2⅜	1616-23-23	342
	2⅞	1616-23-27	378
	3⅜	1616-23-33	414
	3⅞	1616-23-37	450
	4⅞	1616-23-47	522
	5⅞	1616-23-57	594
2 7/8	⅞	1616-27-7	270
	1⅜	1616-27-13	306
	1⅞	1616-27-17	342
	2⅜	1616-27-23	378
	2⅞	1616-27-27	414
	3⅜	1616-27-33	450
	3⅞	1616-27-37	486
	4⅞	1616-27-47	558
	5⅞	1616-27-57	630

A	B	ITEM NUMBER	NET WT.
3 3/8	⅞	1616-33-7	306
	1⅜	1616-33-13	342
	1⅞	1616-33-17	378
	2⅜	1616-33-23	414
	2⅞	1616-33-27	450
	3⅜	1616-33-33	486
	3⅞	1616-33-37	522
	4⅞	1616-33-47	594
	5⅞	1616-33-57	666
3 7/8	⅞	1616-37-7	342
	1⅜	1616-37-13	378
	1⅞	1616-37-17	414
	2⅜	1616-37-23	450
	2⅞	1616-37-27	486
	3⅜	1616-37-33	522
	3⅞	1616-37-37	558
	4⅞	1616-37-47	630
	5⅞	1616-37-57	702
4 7/8	⅞	1616-47-7	414
	1⅜	1616-47-13	450
	1⅞	1616-47-17	486
	2⅜	1616-47-23	522
	2⅞	1616-47-27	558
	3⅜	1616-47-33	594
	3⅞	1616-47-37	630
	4⅞	1616-47-47	702
	5⅞	1616-47-57	774
5 7/8	⅞	1616-57-7	486
	1⅜	1616-57-13	522
	1⅞	1616-57-17	558
	2⅜	1616-57-23	594
	2⅞	1616-57-27	630
	3⅜	1616-57-33	666
	3⅞	1616-57-37	702
	4⅞	1616-57-47	774
	5⅞	1616-57-57	846

A	B	ITEM NUMBER	NET WT.
7/8	⅞	1620-7-7	158
	1⅜	1620-7-13	203
	1⅞	1620-7-17	248
	2⅜	1620-7-23	293
	2⅞	1620-7-27	338
	3⅜	1620-7-33	383
	3⅞	1620-7-37	428
	4⅞	1620-7-47	518
	5⅞	1620-7-57	608
1 3/8	⅞	1620-13-7	203
	1⅜	1620-13-13	248
	1⅞	1620-13-17	293
	2⅜	1620-13-23	338
	2⅞	1620-13-27	383
	3⅜	1620-13-33	428
	3⅞	1620-13-37	473
	4⅞	1620-13-47	563
	5⅞	1620-13-57	653
1 7/8	⅞	1620-17-7	248
	1⅜	1620-17-13	293
	1⅞	1620-17-17	338
	2⅜	1620-17-23	383
	2⅞	1620-17-27	428
	3⅜	1620-17-33	473
	3⅞	1620-17-37	518
	4⅞	1620-17-47	608
	5⅞	1620-17-57	698
2 3/8	⅞	1620-23-7	293
	1⅜	1620-23-13	338
	1⅞	1620-23-17	383
	2⅜	1620-23-23	428
	2⅞	1620-23-27	473
	3⅜	1620-23-33	518
	3⅞	1620-23-37	563
	4⅞	1620-23-47	653
	5⅞	1620-23-57	743

A	B	ITEM NUMBER	NET WT.
2 7/8	⅞	1620-27-7	338
	1⅜	1620-27-13	383
	1⅞	1620-27-17	428
	2⅜	1620-27-23	473
	2⅞	1620-27-27	518
	3⅜	1620-27-33	563
	3⅞	1620-27-37	608
	4⅞	1620-27-47	698
	5⅞	1620-27-57	787
3 3/8	⅞	1620-33-7	383
	1⅜	1620-33-13	428
	1⅞	1620-33-17	473
	2⅜	1620-33-23	518
	2⅞	1620-33-27	563
	3⅜	1620-33-33	608
	3⅞	1620-33-37	653
	4⅞	1620-33-47	743
	5⅞	1620-33-57	832
3 7/8	⅞	1620-37-7	428
	1⅜	1620-37-13	473
	1⅞	1620-37-17	518
	2⅜	1620-37-23	563
	2⅞	1620-37-27	608
	3⅜	1620-37-33	653
	3⅞	1620-37-37	698
	4⅞	1620-37-47	787
	5⅞	1620-37-57	877
4 7/8	⅞	1620-47-7	518
	1⅜	1620-47-13	563
	1⅞	1620-47-17	608
	2⅜	1620-47-23	653
	2⅞	1620-47-27	698
	3⅜	1620-47-33	743
	3⅞	1620-47-37	787
	4⅞	1620-47-47	877
	5⅞	1620-47-57	967
5 7/8	⅞	1620-57-7	608
	1⅜	1620-57-13	653
	1⅞	1620-57-17	698
	2⅜	1620-57-23	743
	2⅞	1620-57-27	787
	3⅜	1620-57-33	832
	3⅞	1620-57-37	877
	4⅞	1620-57-47	967
	5⅞	1620-57-57	1057

Thickness of each plate is finish ground ± .001". Width and length finished square and parallel.

WHEN ORDERING, PLEASE SPECIFY:

1. Quantity & Item Number
2. No. 1, No. 2, No. 3 or No. 7 Steel (No. 7 Steel available standard only for plates up to and including 2⅞ thick)
3. L Dimension (Guide Pin Length)
4. Method of Shipment

Cavity Retainer Sets
15⅞ × 23½ and 15⅞ × 26"

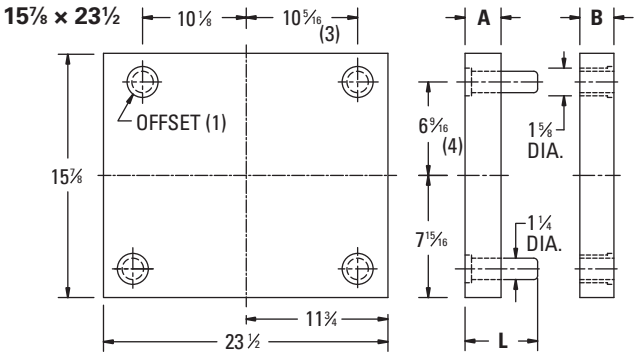

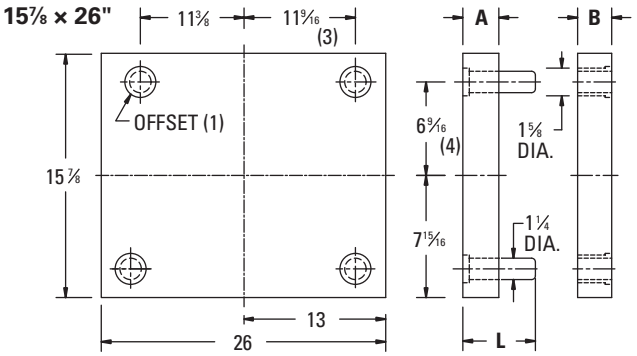

A	B	ITEM NUMBER	NET WT.
1⅜	1⅜	1623-13-13	291
	1⅞	1623-13-17	344
	2⅜	1623-13-23	397
	2⅞	1623-13-27	450
	3⅜	1623-13-33	503
	3⅞	1623-13-37	555
	4⅞	1623-13-47	661
	5⅞	1623-13-57	767
1⅞	1⅜	1623-17-13	344
	1⅞	1623-17-17	397
	2⅜	1623-17-23	450
	2⅞	1623-17-27	502
	3⅜	1623-17-33	555
	3⅞	1623-17-37	608
	4⅞	1623-17-47	714
	5⅞	1623-17-57	820
2⅜	1⅜	1623-23-13	397
	1⅞	1623-23-17	450
	2⅜	1623-23-23	502
	2⅞	1623-23-27	555
	3⅜	1623-23-33	608
	3⅞	1623-23-37	661
	4⅞	1623-23-47	767
	5⅞	1623-23-57	872
2⅞	1⅜	1623-27-13	450
	1⅞	1623-27-17	502
	2⅜	1623-27-23	555
	2⅞	1623-27-27	608
	3⅜	1623-27-33	661
	3⅞	1623-27-37	714
	4⅞	1623-27-47	820
	5⅞	1623-27-57	925

A	B	ITEM NUMBER	NET WT.
3⅜	1⅜	1623-33-13	502
	1⅞	1623-33-17	555
	2⅜	1623-33-23	608
	2⅞	1623-33-27	661
	3⅜	1623-33-33	714
	3⅞	1623-33-37	767
	4⅞	1623-33-47	872
	5⅞	1623-33-57	978
3⅞	1⅜	1623-37-13	555
	1⅞	1623-37-17	608
	2⅜	1623-37-23	661
	2⅞	1623-37-27	714
	3⅜	1623-37-33	767
	3⅞	1623-37-37	820
	4⅞	1623-37-47	925
	5⅞	1623-37-57	1031
4⅞	1⅜	1623-47-13	661
	1⅞	1623-47-17	714
	2⅜	1623-47-23	767
	2⅞	1623-47-27	820
	3⅜	1623-47-33	872
	3⅞	1623-47-37	925
	4⅞	1623-47-47	1031
	5⅞	1623-47-57	1137
5⅞	1⅜	1623-57-13	767
	1⅞	1623-57-17	820
	2⅜	1623-57-23	872
	2⅞	1623-57-27	925
	3⅜	1623-57-33	978
	3⅞	1623-57-37	1031
	4⅞	1623-57-47	1137
	5⅞	1623-57-57	1242

A	B	ITEM NUMBER	NET WT.
1⅜	1⅜	1626-13-13	322
	1⅞	1626-13-17	381
	2⅜	1626-13-23	439
	2⅞	1626-13-27	497
	3⅜	1626-13-33	556
	3⅞	1626-13-37	614
	4⅞	1626-13-47	731
	5⅞	1626-13-57	848
1⅞	1⅜	1626-17-13	381
	1⅞	1626-17-17	439
	2⅜	1626-17-23	497
	2⅞	1626-17-27	556
	3⅜	1626-17-33	614
	3⅞	1626-17-37	673
	4⅞	1626-17-47	790
	5⅞	1626-17-57	907
2⅜	1⅜	1626-23-13	439
	1⅞	1626-23-17	497
	2⅜	1626-23-23	556
	2⅞	1626-23-27	614
	3⅜	1626-23-33	673
	3⅞	1626-23-37	731
	4⅞	1626-23-47	848
	5⅞	1626-23-57	965
2⅞	1⅜	1626-27-13	497
	1⅞	1626-27-17	556
	2⅜	1626-27-23	614
	2⅞	1626-27-27	673
	3⅜	1626-27-33	731
	3⅞	1626-27-37	790
	4⅞	1626-27-47	907
	5⅞	1626-27-57	1024

A	B	ITEM NUMBER	NET WT.
3⅜	1⅜	1626-33-13	556
	1⅞	1626-33-17	614
	2⅜	1626-33-23	673
	2⅞	1626-33-27	731
	3⅜	1626-33-33	790
	3⅞	1626-33-37	848
	4⅞	1626-33-47	965
	5⅞	1626-33-57	1082
3⅞	1⅜	1626-37-13	614
	1⅞	1626-37-17	673
	2⅜	1626-37-23	731
	2⅞	1626-37-27	790
	3⅜	1626-37-33	848
	3⅞	1626-37-37	907
	4⅞	1626-37-47	1024
	5⅞	1626-37-57	1141
4⅞	1⅜	1626-47-13	731
	1⅞	1626-47-17	790
	2⅜	1626-47-23	848
	2⅞	1626-47-27	907
	3⅜	1626-47-33	965
	3⅞	1626-47-37	1024
	4⅞	1626-47-47	1141
	5⅞	1626-47-57	1258
5⅞	1⅜	1626-57-13	848
	1⅞	1626-57-17	907
	2⅜	1626-57-23	965
	2⅞	1626-57-27	1024
	3⅜	1626-57-33	1082
	3⅞	1626-57-37	1141
	4⅞	1626-57-47	1258
	5⅞	1626-57-57	1375

Thickness of each plate is finish ground ± .001". Width and length finished square and parallel.

WHEN ORDERING, PLEASE SPECIFY:

1. Quantity & Item Number
2. No. 1, No. 2, No. 3 or No. 7 Steel (No. 7 Steel available standard only for plates up to and including 2⅞ thick)
3. L Dimension (Guide Pin Length)
4. Method of Shipment

Cavity Retainer Sets
15⅞ × 29½ and 15⅞ × 35½

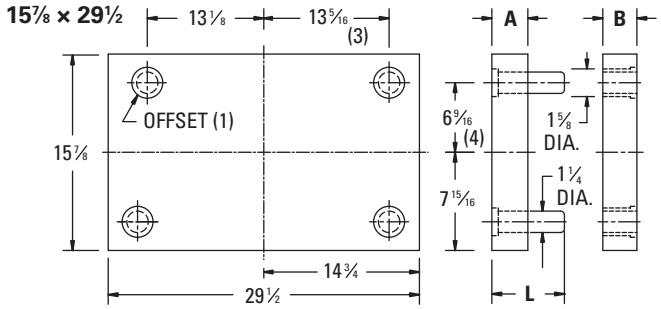

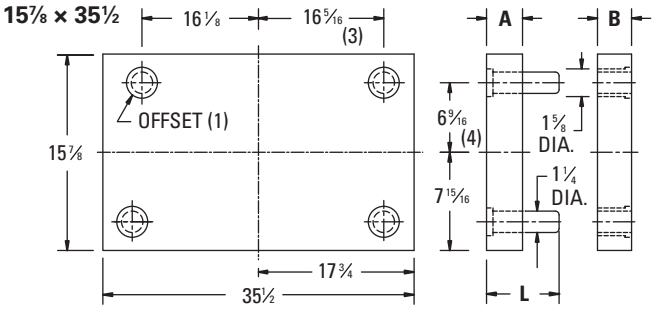

A	B	ITEM NUMBER	NET WT.
1⅜	1⅜	1629-13-13	365
	1⅞	1629-13-17	432
	2⅜	1629-13-23	498
	2⅞	1629-13-27	564
	3⅜	1629-13-33	631
	3⅞	1629-13-37	697
	4⅞	1629-13-47	830
	5⅞	1629-13-57	962
1⅞	1⅜	1629-17-13	432
	1⅞	1629-17-17	498
	2⅜	1629-17-23	564
	2⅞	1629-17-27	631
	3⅜	1629-17-33	697
	3⅞	1629-17-37	763
	4⅞	1629-17-47	896
	5⅞	1629-17-57	1029
2⅜	1⅜	1629-23-13	498
	1⅞	1629-23-17	564
	2⅜	1629-23-23	631
	2⅞	1629-23-27	697
	3⅜	1629-23-33	763
	3⅞	1629-23-37	830
	4⅞	1629-23-47	962
	5⅞	1629-23-57	1095
2⅞	1⅜	1629-27-13	564
	1⅞	1629-27-17	631
	2⅜	1629-27-23	697
	2⅞	1629-27-27	763
	3⅜	1629-27-33	830
	3⅞	1629-27-37	896
	4⅞	1629-27-47	1029
	5⅞	1629-27-57	1161

A	B	ITEM NUMBER	NET WT.
3⅜	1⅜	1629-33-13	631
	1⅞	1629-33-17	697
	2⅜	1629-33-23	763
	2⅞	1629-33-27	830
	3⅜	1629-33-33	896
	3⅞	1629-33-37	962
	4⅞	1629-33-47	1095
	5⅞	1629-33-57	1228
3⅞	1⅜	1629-37-13	697
	1⅞	1629-37-17	763
	2⅜	1629-37-23	830
	2⅞	1629-37-27	896
	3⅜	1629-37-33	962
	3⅞	1629-37-37	1029
	4⅞	1629-37-47	1161
	5⅞	1629-37-57	1294
4⅞	1⅜	1629-47-13	830
	1⅞	1629-47-17	896
	2⅜	1629-47-23	962
	2⅞	1629-47-27	1029
	3⅜	1629-47-33	1095
	3⅞	1629-47-37	1161
	4⅞	1629-47-47	1294
	5⅞	1629-47-57	1427
5⅞	1⅜	1629-57-13	962
	1⅞	1629-57-17	1029
	2⅜	1629-57-23	1095
	2⅞	1629-57-27	1161
	3⅜	1629-57-33	1228
	3⅞	1629-57-37	1294
	4⅞	1629-57-47	1427
	5⅞	1629-57-57	1559

A	B	ITEM NUMBER	NET WT.
1⅜	1⅜	1635-13-13	440
	1⅞	1635-13-17	519
	2⅜	1635-13-23	599
	2⅞	1635-13-27	679
	3⅜	1635-13-33	759
	3⅞	1635-13-37	839
	4⅞	1635-13-47	998
	5⅞	1635-13-57	1158
1⅞	1⅜	1635-17-13	519
	1⅞	1635-17-17	599
	2⅜	1635-17-23	679
	2⅞	1635-17-27	759
	3⅜	1635-17-33	839
	3⅞	1635-17-37	919
	4⅞	1635-17-47	1078
	5⅞	1635-17-57	1238
2⅜	1⅜	1635-23-13	599
	1⅞	1635-23-17	679
	2⅜	1635-23-23	759
	2⅞	1635-23-27	839
	3⅜	1635-23-33	919
	3⅞	1635-23-37	998
	4⅞	1635-23-47	1158
	5⅞	1635-23-57	1318
2⅞	1⅜	1635-27-13	679
	1⅞	1635-27-17	759
	2⅜	1635-27-23	839
	2⅞	1635-27-27	919
	3⅜	1635-27-33	998
	3⅞	1635-27-37	1078
	4⅞	1635-27-47	1238
	5⅞	1635-27-57	1398

A	B	ITEM NUMBER	NET WT.
3⅜	1⅜	1635-33-13	759
	1⅞	1635-33-17	839
	2⅜	1635-33-23	919
	2⅞	1635-33-27	998
	3⅜	1635-33-33	1078
	3⅞	1635-33-37	1158
	4⅞	1635-33-47	1318
	5⅞	1635-33-57	1477
3⅞	1⅜	1635-37-13	839
	1⅞	1635-37-17	919
	2⅜	1635-37-23	998
	2⅞	1635-37-27	1078
	3⅜	1635-37-33	1158
	3⅞	1635-37-37	1238
	4⅞	1635-37-47	1398
	5⅞	1635-37-57	1557
4⅞	1⅜	1635-47-13	998
	1⅞	1635-47-17	1078
	2⅜	1635-47-23	1158
	2⅞	1635-47-27	1238
	3⅜	1635-47-33	1318
	3⅞	1635-47-37	1398
	4⅞	1635-47-47	1557
	5⅞	1635-47-57	1717
5⅞	1⅜	1635-57-13	1158
	1⅞	1635-57-17	1238
	2⅜	1635-57-23	1318
	2⅞	1635-57-27	1398
	3⅜	1635-57-33	1477
	3⅞	1635-57-37	1557
	4⅞	1635-57-47	1717
	5⅞	1635-57-57	1877

Thickness of each plate is finish ground ± .001". Width and length finished square and parallel.

WHEN ORDERING, PLEASE SPECIFY:

1. Quantity & Item Number
2. No. 1, No. 2, No. 3 or No. 7 Steel (No. 7 Steel available standard only for plates up to and including 2⅞ thick)
3. L Dimension (Guide Pin Length)
4. Method of Shipment

Cavity Retainer Sets
16½ × 23¾ and 16½ × 29½

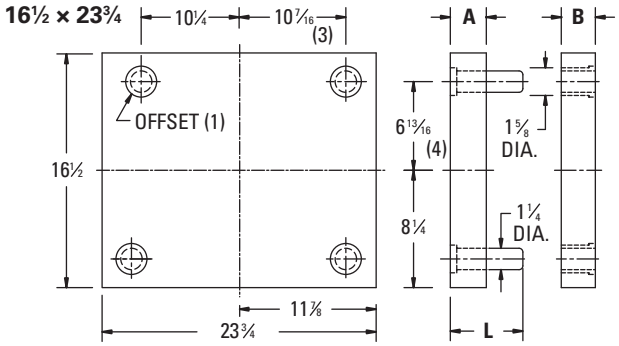

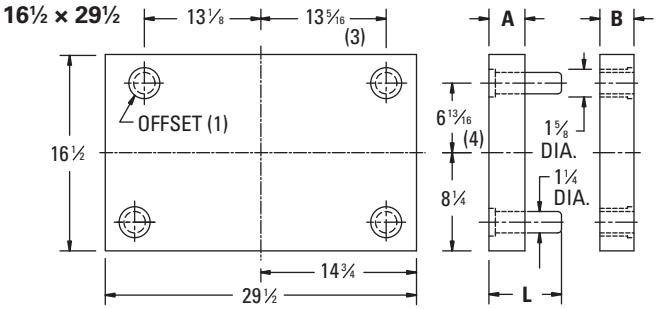

A	B	ITEM NUMBER	NET WT.
1⅜	1⅜	1724-13-13	306
	1⅞	1724-13-17	361
	2⅜	1724-13-23	417
	2⅞	1724-13-27	472
	3⅜	1724-13-33	528
	3⅞	1724-13-37	583
	4⅞	1724-13-47	694
	5⅞	1724-13-57	805
1⅞	1⅜	1724-17-13	361
	1⅞	1724-17-17	417
	2⅜	1724-17-23	472
	2⅞	1724-17-27	528
	3⅜	1724-17-33	583
	3⅞	1724-17-37	639
	4⅞	1724-17-47	750
	5⅞	1724-17-57	861
2⅜	1⅜	1724-23-13	417
	1⅞	1724-23-17	472
	2⅜	1724-23-23	528
	2⅞	1724-23-27	583
	3⅜	1724-23-33	639
	3⅞	1724-23-37	694
	4⅞	1724-23-47	805
	5⅞	1724-23-57	916
2⅞	1⅜	1724-27-13	472
	1⅞	1724-27-17	528
	2⅜	1724-27-23	583
	2⅞	1724-27-27	639
	3⅜	1724-27-33	694
	3⅞	1724-27-37	750
	4⅞	1724-27-47	861
	5⅞	1724-27-57	972

A	B	ITEM NUMBER	NET WT.
3⅜	1⅜	1724-33-13	528
	1⅞	1724-33-17	583
	2⅜	1724-33-23	639
	2⅞	1724-33-27	694
	3⅜	1724-33-33	750
	3⅞	1724-33-37	805
	4⅞	1724-33-47	916
	5⅞	1724-33-57	1027
3⅞	1⅜	1724-37-13	583
	1⅞	1724-37-17	639
	2⅜	1724-37-23	694
	2⅞	1724-37-27	750
	3⅜	1724-37-33	805
	3⅞	1724-37-37	861
	4⅞	1724-37-47	972
	5⅞	1724-37-57	1083
4⅞	1⅜	1724-47-13	694
	1⅞	1724-47-17	750
	2⅜	1724-47-23	805
	2⅞	1724-47-27	861
	3⅜	1724-47-33	916
	3⅞	1724-47-37	972
	4⅞	1724-47-47	1083
	5⅞	1724-47-57	1194
5⅞	1⅜	1724-57-13	805
	1⅞	1724-57-17	861
	2⅜	1724-57-23	916
	2⅞	1724-57-27	972
	3⅜	1724-57-33	1027
	3⅞	1724-57-37	1083
	4⅞	1724-57-47	1194
	5⅞	1724-57-57	1305

A	B	ITEM NUMBER	NET WT.
1⅜	1⅜	1729-13-13	380
	1⅞	1729-13-17	449
	2⅜	1729-13-23	518
	2⅞	1729-13-27	587
	3⅜	1729-13-33	656
	3⅞	1729-13-37	724
	4⅞	1729-13-47	862
	5⅞	1729-13-57	1000
1⅞	1⅜	1729-17-13	449
	1⅞	1729-17-17	518
	2⅜	1729-17-23	587
	2⅞	1729-17-27	656
	3⅜	1729-17-33	724
	3⅞	1729-17-37	793
	4⅞	1729-17-47	931
	5⅞	1729-17-57	1069
2⅜	1⅜	1729-23-13	518
	1⅞	1729-23-17	587
	2⅜	1729-23-23	656
	2⅞	1729-23-27	724
	3⅜	1729-23-33	793
	3⅞	1729-23-37	862
	4⅞	1729-23-47	1000
	5⅞	1729-23-57	1138
2⅞	1⅜	1729-27-13	587
	1⅞	1729-27-17	656
	2⅜	1729-27-23	724
	2⅞	1729-27-27	793
	3⅜	1729-27-33	862
	3⅞	1729-27-37	931
	4⅞	1729-27-47	1069
	5⅞	1729-27-57	1207

A	B	ITEM NUMBER	NET WT.
3⅜	1⅜	1729-33-13	656
	1⅞	1729-33-17	724
	2⅜	1729-33-23	793
	2⅞	1729-33-27	862
	3⅜	1729-33-33	931
	3⅞	1729-33-37	1000
	4⅞	1729-33-47	1138
	5⅞	1729-33-57	1276
3⅞	1⅜	1729-37-13	724
	1⅞	1729-37-17	793
	2⅜	1729-37-23	862
	2⅞	1729-37-27	931
	3⅜	1729-37-33	1000
	3⅞	1729-37-37	1069
	4⅞	1729-37-47	1207
	5⅞	1729-37-57	1345
4⅞	1⅜	1729-47-13	862
	1⅞	1729-47-17	931
	2⅜	1729-47-23	1000
	2⅞	1729-47-27	1069
	3⅜	1729-47-33	1138
	3⅞	1729-47-37	1207
	4⅞	1729-47-47	1345
	5⅞	1729-47-57	1483
5⅞	1⅜	1729-57-13	1000
	1⅞	1729-57-17	1069
	2⅜	1729-57-23	1138
	2⅞	1729-57-27	1207
	3⅜	1729-57-33	1276
	3⅞	1729-57-37	1345
	4⅞	1729-57-47	1483
	5⅞	1729-57-57	1621

Thickness of each plate is finish ground ± .001". Width and length finished square and parallel.

WHEN ORDERING, PLEASE SPECIFY:

1. Quantity & Item Number
2. No. 1, No. 2, No. 3 or No. 7 Steel (No. 7 Steel available standard only for plates up to and including 2⅞ thick)
3. L Dimension (Guide Pin Length)
4. Method of Shipment

Cavity Retainer Sets
17⅞ × 18" and 17⅞ × 20"

17⅞ × 18"

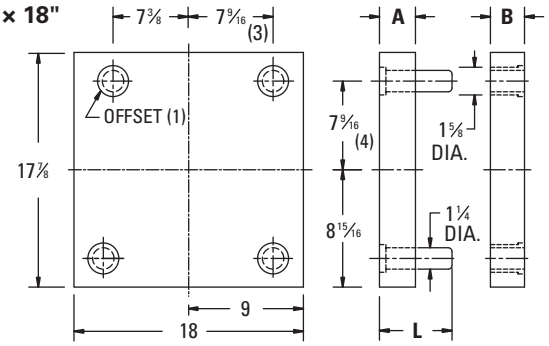

17⅞ × 20"

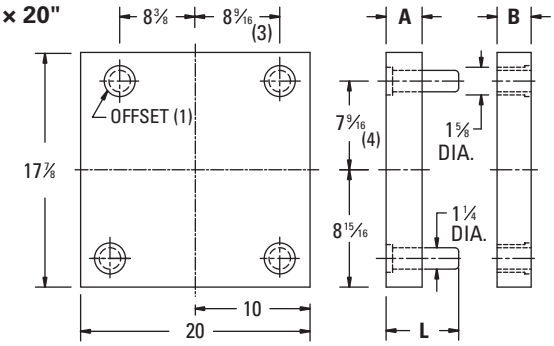

A	B	ITEM NUMBER	NET WT.
1⅜	1⅜	1818-13-13	251
	1⅞	1818-13-17	297
	2⅜	1818-13-23	342
	2⅞	1818-13-27	388
	3⅜	1818-13-33	434
	3⅞	1818-13-37	479
	4⅞	1818-13-47	570
	5⅞	1818-13-57	661
1⅞	1⅜	1818-17-13	297
	1⅞	1818-17-17	342
	2⅜	1818-17-23	388
	2⅞	1818-17-27	434
	3⅜	1818-17-33	479
	3⅞	1818-17-37	525
	4⅞	1818-17-47	616
	5⅞	1818-17-57	707
2⅜	1⅜	1818-23-13	342
	1⅞	1818-23-17	388
	2⅜	1818-23-23	434
	2⅞	1818-23-27	479
	3⅜	1818-23-33	525
	3⅞	1818-23-37	570
	4⅞	1818-23-47	661
	5⅞	1818-23-57	753
2⅞	1⅜	1818-27-13	388
	1⅞	1818-27-17	434
	2⅜	1818-27-23	479
	2⅞	1818-27-27	525
	3⅜	1818-27-33	570
	3⅞	1818-27-37	616
	4⅞	1818-27-47	707
	5⅞	1818-27-57	798

A	B	ITEM NUMBER	NET WT.
3⅜	1⅜	1818-33-13	434
	1⅞	1818-33-17	479
	2⅜	1818-33-23	525
	2⅞	1818-33-27	570
	3⅜	1818-33-33	616
	3⅞	1818-33-37	661
	4⅞	1818-33-47	753
	5⅞	1818-33-57	844
3⅞	1⅜	1818-37-13	479
	1⅞	1818-37-17	525
	2⅜	1818-37-23	570
	2⅞	1818-37-27	616
	3⅜	1818-37-33	661
	3⅞	1818-37-37	707
	4⅞	1818-37-47	798
	5⅞	1818-37-57	889
4⅞	1⅜	1818-47-13	570
	1⅞	1818-47-17	616
	2⅜	1818-47-23	661
	2⅞	1818-47-27	707
	3⅜	1818-47-33	753
	3⅞	1818-47-37	798
	4⅞	1818-47-47	889
	5⅞	1818-47-57	980
5⅞	1⅜	1818-57-13	661
	1⅞	1818-57-17	707
	2⅜	1818-57-23	753
	2⅞	1818-57-27	798
	3⅜	1818-57-33	844
	3⅞	1818-57-37	889
	4⅞	1818-57-47	980
	5⅞	1818-57-57	1072

A	B	ITEM NUMBER	NET WT.
1⅜	1⅜	1820-13-13	279
	1⅞	1820-13-17	330
	2⅜	1820-13-23	380
	2⅞	1820-13-27	431
	3⅜	1820-13-33	482
	3⅞	1820-13-37	532
	4⅞	1820-13-47	633
	5⅞	1820-13-57	735
1⅞	1⅜	1820-17-13	330
	1⅞	1820-17-17	380
	2⅜	1820-17-23	431
	2⅞	1820-17-27	482
	3⅜	1820-17-33	532
	3⅞	1820-17-37	583
	4⅞	1820-17-47	684
	5⅞	1820-17-57	785
2⅜	1⅜	1820-23-13	380
	1⅞	1820-23-17	431
	2⅜	1820-23-23	482
	2⅞	1820-23-27	532
	3⅜	1820-23-33	583
	3⅞	1820-23-37	633
	4⅞	1820-23-47	735
	5⅞	1820-23-57	836
2⅞	1⅜	1820-27-13	431
	1⅞	1820-27-17	482
	2⅜	1820-27-23	532
	2⅞	1820-27-27	583
	3⅜	1820-27-33	633
	3⅞	1820-27-37	684
	4⅞	1820-27-47	785
	5⅞	1820-27-57	887

A	B	ITEM NUMBER	NET WT.
3⅜	1⅜	1820-33-13	482
	1⅞	1820-33-17	532
	2⅜	1820-33-23	583
	2⅞	1820-33-27	633
	3⅜	1820-33-33	684
	3⅞	1820-33-37	735
	4⅞	1820-33-47	836
	5⅞	1820-33-57	937
3⅞	1⅜	1820-37-13	532
	1⅞	1820-37-17	583
	2⅜	1820-37-23	633
	2⅞	1820-37-27	684
	3⅜	1820-37-33	735
	3⅞	1820-37-37	785
	4⅞	1820-37-47	887
	5⅞	1820-37-57	988
4⅞	1⅜	1820-47-13	633
	1⅞	1820-47-17	684
	2⅜	1820-47-23	735
	2⅞	1820-47-27	785
	3⅜	1820-47-33	836
	3⅞	1820-47-37	887
	4⅞	1820-47-47	988
	5⅞	1820-47-57	1089
5⅞	1⅜	1820-57-13	735
	1⅞	1820-57-17	785
	2⅜	1820-57-23	836
	2⅞	1820-57-27	887
	3⅜	1820-57-33	937
	3⅞	1820-57-37	988
	4⅞	1820-57-47	1089
	5⅞	1820-57-57	1191

Thickness of each plate is finish ground ± .001". Width and length finished square and parallel.

WHEN ORDERING, PLEASE SPECIFY:

1. Quantity & Item Number
2. No. 1, No. 2, No. 3 or No. 7 Steel (No. 7 Steel available standard only for plates up to and including 2⅞ thick)
3. L Dimension (Guide Pin Length)
4. Method of Shipment

Cavity Retainer Sets
17⅞ × 23½ and 17⅞ × 26"

17⅞ × 23½

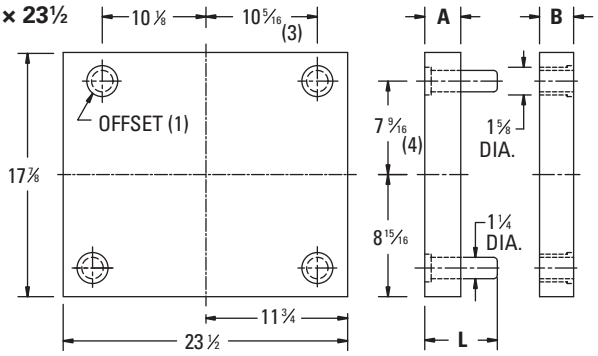

17⅞ × 26"

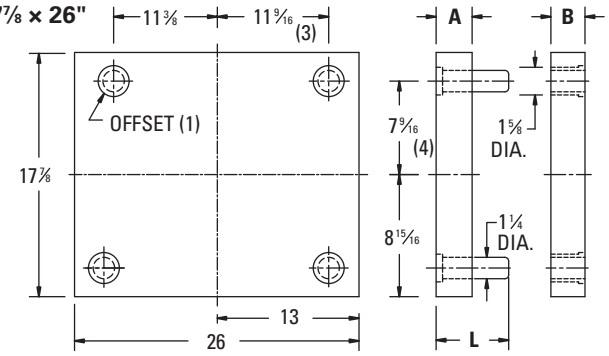

A	B	ITEM NUMBER	NET WT.
1⅜	1⅜	1823-13-13	328
	1⅞	1823-13-17	387
	2⅜	1823-13-23	447
	2⅞	1823-13-27	506
	3⅜	1823-13-33	566
	3⅞	1823-13-37	625
	4⅞	1823-13-47	744
	5⅞	1823-13-57	863
1⅞	1⅜	1823-17-13	387
	1⅞	1823-17-17	447
	2⅜	1823-17-23	506
	2⅞	1823-17-27	566
	3⅜	1823-17-33	625
	3⅞	1823-17-37	685
	4⅞	1823-17-47	804
	5⅞	1823-17-57	923
2⅜	1⅜	1823-23-13	447
	1⅞	1823-23-17	506
	2⅜	1823-23-23	566
	2⅞	1823-23-27	625
	3⅜	1823-23-33	685
	3⅞	1823-23-37	744
	4⅞	1823-23-47	863
	5⅞	1823-23-57	982
2⅞	1⅜	1823-27-13	506
	1⅞	1823-27-17	566
	2⅜	1823-27-23	625
	2⅞	1823-27-27	685
	3⅜	1823-27-33	744
	3⅞	1823-27-37	804
	4⅞	1823-27-47	923
	5⅞	1823-27-57	1042

A	B	ITEM NUMBER	NET WT.
3⅜	1⅜	1823-33-13	566
	1⅞	1823-33-17	625
	2⅜	1823-33-23	685
	2⅞	1823-33-27	744
	3⅜	1823-33-33	804
	3⅞	1823-33-37	863
	4⅞	1823-33-47	982
	5⅞	1823-33-57	1101
3⅞	1⅜	1823-37-13	625
	1⅞	1823-37-17	685
	2⅜	1823-37-23	744
	2⅞	1823-37-27	804
	3⅜	1823-37-33	863
	3⅞	1823-37-37	923
	4⅞	1823-37-47	1042
	5⅞	1823-37-57	1161
4⅞	1⅜	1823-47-13	744
	1⅞	1823-47-17	804
	2⅜	1823-47-23	863
	2⅞	1823-47-27	923
	3⅜	1823-47-33	982
	3⅞	1823-47-37	1042
	4⅞	1823-47-47	1161
	5⅞	1823-47-57	1280
5⅞	1⅜	1823-57-13	863
	1⅞	1823-57-17	923
	2⅜	1823-57-23	982
	2⅞	1823-57-27	1042
	3⅜	1823-57-33	1101
	3⅞	1823-57-37	1161
	4⅞	1823-57-47	1280
	5⅞	1823-57-57	1399

A	B	ITEM NUMBER	NET WT.
1⅜	1⅜	1826-13-13	363
	1⅞	1826-13-17	428
	2⅜	1826-13-23	494
	2⅞	1826-13-27	560
	3⅜	1826-13-33	626
	3⅞	1826-13-37	692
	4⅞	1826-13-47	823
	5⅞	1826-13-57	955
1⅞	1⅜	1826-17-13	428
	1⅞	1826-17-17	494
	2⅜	1826-17-23	560
	2⅞	1826-17-27	626
	3⅜	1826-17-33	692
	3⅞	1826-17-37	758
	4⅞	1826-17-47	889
	5⅞	1826-17-57	1021
2⅜	1⅜	1826-23-13	494
	1⅞	1826-23-17	560
	2⅜	1826-23-23	626
	2⅞	1826-23-27	692
	3⅜	1826-23-33	758
	3⅞	1826-23-37	823
	4⅞	1826-23-47	955
	5⅞	1826-23-57	1087
2⅞	1⅜	1826-27-13	560
	1⅞	1826-27-17	626
	2⅜	1826-27-23	692
	2⅞	1826-27-27	758
	3⅜	1826-27-33	823
	3⅞	1826-27-37	889
	4⅞	1826-27-47	1021
	5⅞	1826-27-57	1153

A	B	ITEM NUMBER	NET WT.
3⅜	1⅜	1826-33-13	626
	1⅞	1826-33-17	692
	2⅜	1826-33-23	758
	2⅞	1826-33-27	823
	3⅜	1826-33-33	889
	3⅞	1826-33-37	955
	4⅞	1826-33-47	1087
	5⅞	1826-33-57	1218
3⅞	1⅜	1826-37-13	692
	1⅞	1826-37-17	758
	2⅜	1826-37-23	823
	2⅞	1826-37-27	889
	3⅜	1826-37-33	955
	3⅞	1826-37-37	1021
	4⅞	1826-37-47	1153
	5⅞	1826-37-57	1284
4⅞	1⅜	1826-47-13	823
	1⅞	1826-47-17	889
	2⅜	1826-47-23	955
	2⅞	1826-47-27	1021
	3⅜	1826-47-33	1087
	3⅞	1826-47-37	1153
	4⅞	1826-47-47	1284
	5⅞	1826-47-57	1416
5⅞	1⅜	1826-57-13	955
	1⅞	1826-57-17	1021
	2⅜	1826-57-23	1087
	2⅞	1826-57-27	1153
	3⅜	1826-57-33	1218
	3⅞	1826-57-37	1284
	4⅞	1826-57-47	1416
	5⅞	1826-57-57	1548

Thickness of each plate is finish ground ± .001". Width and length finished square and parallel.

WHEN ORDERING, PLEASE SPECIFY:

1. Quantity & Item Number
2. No. 1, No. 2, No. 3 or No. 7 Steel (No. 7 Steel available standard only for plates up to and including 2⅞ thick)
3. L Dimension (Guide Pin Length)
4. Method of Shipment

Cavity Retainer Sets
17⅞ × 29½ and 17⅞ × 35½

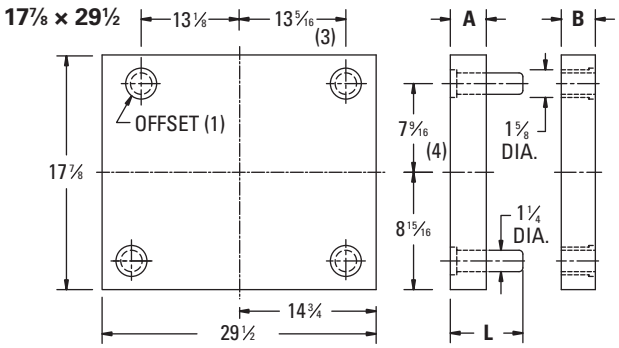

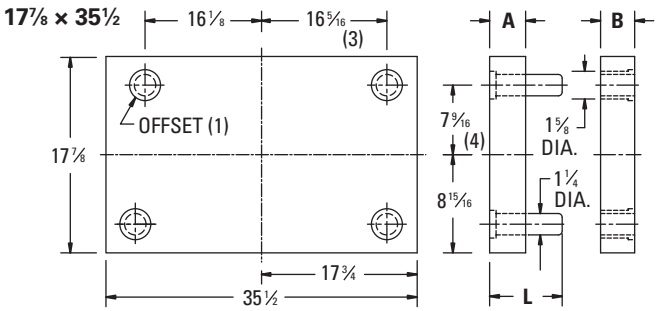

A	B	ITEM NUMBER	NET WT.
1⅜	1⅜	1829-13-13	411
	1⅞	1829-13-17	486
	2⅜	1829-13-23	561
	2⅞	1829-13-27	635
	3⅜	1829-13-33	710
	3⅞	1829-13-37	785
	4⅞	1829-13-47	934
	5⅞	1829-13-57	1084
1⅞	1⅜	1829-17-13	486
	1⅞	1829-17-17	561
	2⅜	1829-17-23	635
	2⅞	1829-17-27	710
	3⅜	1829-17-33	785
	3⅞	1829-17-37	859
	4⅞	1829-17-47	1009
	5⅞	1829-17-57	1158
2⅜	1⅜	1829-23-13	561
	1⅞	1829-23-17	635
	2⅜	1829-23-23	710
	2⅞	1829-23-27	785
	3⅜	1829-23-33	859
	3⅞	1829-23-37	934
	4⅞	1829-23-47	1084
	5⅞	1829-23-57	1233
2⅞	1⅜	1829-27-13	635
	1⅞	1829-27-17	710
	2⅜	1829-27-23	785
	2⅞	1829-27-27	859
	3⅜	1829-27-33	934
	3⅞	1829-27-37	1009
	4⅞	1829-27-47	1158
	5⅞	1829-27-57	1308

A	B	ITEM NUMBER	NET WT.
3⅜	1⅜	1829-33-13	710
	1⅞	1829-33-17	785
	2⅜	1829-33-23	859
	2⅞	1829-33-27	934
	3⅜	1829-33-33	1009
	3⅞	1829-33-37	1084
	4⅞	1829-33-47	1233
	5⅞	1829-33-57	1382
3⅞	1⅜	1829-37-13	785
	1⅞	1829-37-17	859
	2⅜	1829-37-23	934
	2⅞	1829-37-27	1009
	3⅜	1829-37-33	1084
	3⅞	1829-37-37	1158
	4⅞	1829-37-47	1308
	5⅞	1829-37-57	1457
4⅞	1⅜	1829-47-13	934
	1⅞	1829-47-17	1009
	2⅜	1829-47-23	1084
	2⅞	1829-47-27	1158
	3⅜	1829-47-33	1233
	3⅞	1829-47-37	1308
	4⅞	1829-47-47	1457
	5⅞	1829-47-57	1606
5⅞	1⅜	1829-57-13	1084
	1⅞	1829-57-17	1158
	2⅜	1829-57-23	1233
	2⅞	1829-57-27	1308
	3⅜	1829-57-33	1382
	3⅞	1829-57-37	1457
	4⅞	1829-57-47	1606
	5⅞	1829-57-57	1756

A	B	ITEM NUMBER	NET WT.
1⅜	1⅜	1835-13-13	495
	1⅞	1835-13-17	585
	2⅜	1835-13-23	675
	2⅞	1835-13-27	765
	3⅜	1835-13-33	854
	3⅞	1835-13-37	944
	4⅞	1835-13-47	1124
	5⅞	1835-13-57	1304
1⅞	1⅜	1835-17-13	585
	1⅞	1835-17-17	675
	2⅜	1835-17-23	765
	2⅞	1835-17-27	854
	3⅜	1835-17-33	944
	3⅞	1835-17-37	1034
	4⅞	1835-17-47	1214
	5⅞	1835-17-57	1394
2⅜	1⅜	1835-23-13	675
	1⅞	1835-23-17	765
	2⅜	1835-23-23	854
	2⅞	1835-23-27	944
	3⅜	1835-23-33	1034
	3⅞	1835-23-37	1124
	4⅞	1835-23-47	1304
	5⅞	1835-23-57	1484
2⅞	1⅜	1835-27-13	765
	1⅞	1835-27-17	854
	2⅜	1835-27-23	944
	2⅞	1835-27-27	1034
	3⅜	1835-27-33	1124
	3⅞	1835-27-37	1214
	4⅞	1835-27-47	1394
	5⅞	1835-27-57	1574

A	B	ITEM NUMBER	NET WT.
3⅜	1⅜	1835-33-13	854
	1⅞	1835-33-17	944
	2⅜	1835-33-23	1034
	2⅞	1835-33-27	1124
	3⅜	1835-33-33	1214
	3⅞	1835-33-37	1304
	4⅞	1835-33-47	1484
	5⅞	1835-33-57	1663
3⅞	1⅜	1835-37-13	944
	1⅞	1835-37-17	1034
	2⅜	1835-37-23	1124
	2⅞	1835-37-27	1214
	3⅜	1835-37-33	1304
	3⅞	1835-37-37	1394
	4⅞	1835-37-47	1574
	5⅞	1835-37-57	1753
4⅞	1⅜	1835-47-13	1124
	1⅞	1835-47-17	1214
	2⅜	1835-47-23	1304
	2⅞	1835-47-27	1394
	3⅜	1835-47-33	1484
	3⅞	1835-47-37	1574
	4⅞	1835-47-47	1753
	5⅞	1835-47-57	1933
5⅞	1⅜	1835-57-13	1304
	1⅞	1835-57-17	1394
	2⅜	1835-57-23	1484
	2⅞	1835-57-27	1574
	3⅜	1835-57-33	1663
	3⅞	1835-57-37	1753
	4⅞	1835-57-47	1933
	5⅞	1835-57-57	2113

Thickness of each plate is finish ground ± .001". Width and length finished square and parallel.

WHEN ORDERING, PLEASE SPECIFY:

1. Quantity & Item Number
2. No 1, No. 2, No. 3 or No 7 Steel (No. 7 Steel available standard only for plates up to and including 2⅞ thick)
3. L Dimension (Guide Pin Length)
4. Method of Shipment

Cavity Retainer Sets
19½ × 23¾ and 19½ × 29½

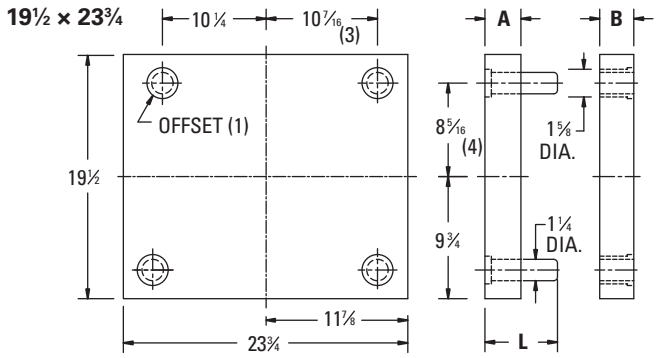

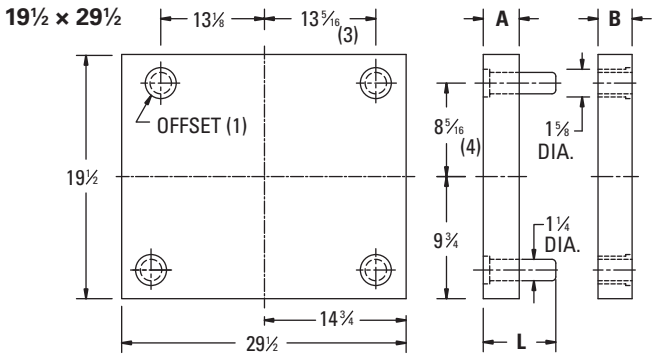

A	B	ITEM NUMBER	NET WT.
1⅜	1⅜	1924-13-13	361
	1⅞	1924-13-17	427
	2⅜	1924-13-23	493
	2⅞	1924-13-27	558
	3⅜	1924-13-33	624
	3⅞	1924-13-37	689
	4⅞	1924-13-47	821
	5⅞	1924-13-57	952
1⅞	1⅜	1924-17-13	427
	1⅞	1924-17-17	493
	2⅜	1924-17-23	558
	2⅞	1924-17-27	624
	3⅜	1924-17-33	689
	3⅞	1924-17-37	755
	4⅞	1924-17-47	886
	5⅞	1924-17-57	1017
2⅜	1⅜	1924-23-13	493
	1⅞	1924-23-17	558
	2⅜	1924-23-23	624
	2⅞	1924-23-27	689
	3⅜	1924-23-33	755
	3⅞	1924-23-37	821
	4⅞	1924-23-47	952
	5⅞	1924-23-57	1083
2⅞	1⅜	1924-27-13	558
	1⅞	1924-27-17	624
	2⅜	1924-27-23	689
	2⅞	1924-27-27	755
	3⅜	1924-27-33	821
	3⅞	1924-27-37	886
	4⅞	1924-27-47	1017
	5⅞	1924-27-57	1149

A	B	ITEM NUMBER	NET WT.
3⅜	1⅜	1924-33-13	624
	1⅞	1924-33-17	689
	2⅜	1924-33-23	755
	2⅞	1924-33-27	821
	3⅜	1924-33-33	886
	3⅞	1924-33-37	952
	4⅞	1924-33-47	1083
	5⅞	1924-33-57	1214
3⅞	1⅜	1924-37-13	689
	1⅞	1924-37-17	755
	2⅜	1924-37-23	821
	2⅞	1924-37-27	886
	3⅜	1924-37-33	952
	3⅞	1924-37-37	1017
	4⅞	1924-37-47	1149
	5⅞	1924-37-57	1280
4⅞	1⅜	1924-47-13	821
	1⅞	1924-47-17	886
	2⅜	1924-47-23	952
	2⅞	1924-47-27	1017
	3⅜	1924-47-33	1083
	3⅞	1924-47-37	1149
	4⅞	1924-47-47	1280
	5⅞	1924-47-57	1411
5⅞	1⅜	1924-57-13	952
	1⅞	1924-57-17	1017
	2⅜	1924-57-23	1083
	2⅞	1924-57-27	1149
	3⅜	1924-57-33	1214
	3⅞	1924-57-37	1280
	4⅞	1924-57-47	1411
	5⅞	1924-57-57	1542

A	B	ITEM NUMBER	NET WT.
1⅜	1⅜	1929-13-13	449
	1⅞	1929-13-17	530
	2⅜	1929-13-23	612
	2⅞	1929-13-27	693
	3⅜	1929-13-33	775
	3⅞	1929-13-37	856
	4⅞	1929-13-47	1019
	5⅞	1929-13-57	1182
1⅞	1⅜	1929-17-13	530
	1⅞	1929-17-17	612
	2⅜	1929-17-23	693
	2⅞	1929-17-27	775
	3⅜	1929-17-33	856
	3⅞	1929-17-37	938
	4⅞	1929-17-47	1100
	5⅞	1929-17-57	1263
2⅜	1⅜	1929-23-13	612
	1⅞	1929-23-17	693
	2⅜	1929-23-23	775
	2⅞	1929-23-27	856
	3⅜	1929-23-33	938
	3⅞	1929-23-37	1019
	4⅞	1929-23-47	1182
	5⅞	1929-23-57	1345
2⅞	1⅜	1929-27-13	693
	1⅞	1929-27-17	775
	2⅜	1929-27-23	856
	2⅞	1929-27-27	938
	3⅜	1929-27-33	1019
	3⅞	1929-27-37	1100
	4⅞	1929-27-47	1263
	5⅞	1929-27-57	1426

A	B	ITEM NUMBER	NET WT.
3⅜	1⅜	1929-33-13	775
	1⅞	1929-33-17	856
	2⅜	1929-33-23	938
	2⅞	1929-33-27	1019
	3⅜	1929-33-33	1100
	3⅞	1929-33-37	1182
	4⅞	1929-33-47	1345
	5⅞	1929-33-57	1508
3⅞	1⅜	1929-37-13	856
	1⅞	1929-37-17	938
	2⅜	1929-37-23	1019
	2⅞	1929-37-27	1100
	3⅜	1929-37-33	1182
	3⅞	1929-37-37	1263
	4⅞	1929-37-47	1426
	5⅞	1929-37-57	1589
4⅞	1⅜	1929-47-13	1019
	1⅞	1929-47-17	1100
	2⅜	1929-47-23	1182
	2⅞	1929-47-27	1263
	3⅜	1929-47-33	1345
	3⅞	1929-47-37	1426
	4⅞	1929-47-47	1589
	5⅞	1929-47-57	1752
5⅞	1⅜	1929-57-13	1182
	1⅞	1929-57-17	1263
	2⅜	1929-57-23	1345
	2⅞	1929-57-27	1426
	3⅜	1929-57-33	1508
	3⅞	1929-57-37	1589
	4⅞	1929-57-47	1752
	5⅞	1929-57-57	1915

Thickness of each plate is finish ground ± .001". Width and length finished square and parallel.

WHEN ORDERING, PLEASE SPECIFY:

1. Quantity & Item Number
2. No. 1, No. 2, No. 3 or No. 7 Steel (No. 7 Steel available standard only for plates up to and including 2⅞ thick)
3. L Dimension (Guide Pin Length)
4. Method of Shipment

Cavity Retainer Sets
19½ × 35½ and 23¾ × 23¾

19½ × 35½

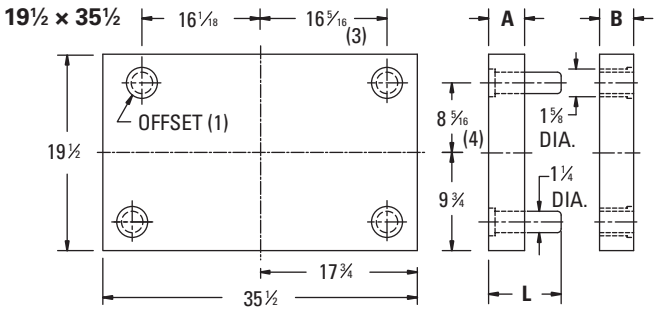

23¾ × 23¾

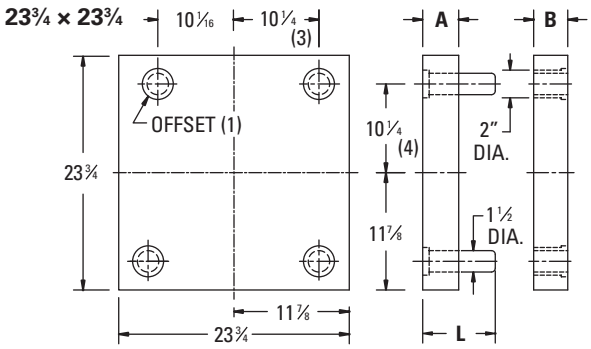

A	B	ITEM NUMBER	NET WT.
1⅜	1⅜	1935-13-13	540
	1⅞	1935-13-17	638
	2⅜	1935-13-23	736
	2⅞	1935-13-27	834
	3⅜	1935-13-33	932
	3⅞	1935-13-37	1030
	4⅞	1935-13-47	1226
	5⅞	1935-13-57	1422
1⅞	1⅜	1935-17-13	638
	1⅞	1935-17-17	736
	2⅜	1935-17-23	834
	2⅞	1935-17-27	932
	3⅜	1935-17-33	1030
	3⅞	1935-17-37	1128
	4⅞	1935-17-47	1324
	5⅞	1935-17-57	1520
2⅜	1⅜	1935-23-13	736
	1⅞	1935-23-17	834
	2⅜	1935-23-23	932
	2⅞	1935-23-27	1030
	3⅜	1935-23-33	1128
	3⅞	1935-23-37	1226
	4⅞	1935-23-47	1422
	5⅞	1935-23-57	1618
2⅞	1⅜	1935-27-13	834
	1⅞	1935-27-17	932
	2⅜	1935-27-23	1030
	2⅞	1935-27-27	1128
	3⅜	1935-27-33	1226
	3⅞	1935-27-37	1324
	4⅞	1935-27-47	1520
	5⅞	1935-27-57	1717

A	B	ITEM NUMBER	NET WT.
3⅜	1⅜	1935-33-13	932
	1⅞	1935-33-17	1030
	2⅜	1935-33-23	1128
	2⅞	1935-33-27	1226
	3⅜	1935-33-33	1324
	3⅞	1935-33-37	1422
	4⅞	1935-33-47	1618
	5⅞	1935-33-57	1815
3⅞	1⅜	1935-37-13	1030
	1⅞	1935-37-17	1128
	2⅜	1935-37-23	1226
	2⅞	1935-37-27	1324
	3⅜	1935-37-33	1422
	3⅞	1935-37-37	1520
	4⅞	1935-37-47	1717
	5⅞	1935-37-57	1913
4⅞	1⅜	1935-47-13	1226
	1⅞	1935-47-17	1324
	2⅜	1935-47-23	1422
	2⅞	1935-47-27	1520
	3⅜	1935-47-33	1618
	3⅞	1935-47-37	1717
	4⅞	1935-47-47	1913
	5⅞	1935-47-57	2109
5⅞	1⅜	1935-57-13	1422
	1⅞	1935-57-17	1520
	2⅜	1935-57-23	1618
	2⅞	1935-57-27	1717
	3⅜	1935-57-33	1815
	3⅞	1935-57-37	1913
	4⅞	1935-57-47	2109
	5⅞	1935-57-57	2305

A	B	ITEM NUMBER	NET WT.
1⅜	1⅜	2424-13-13	440
	1⅞	2424-13-17	520
	2⅜	2424-13-23	600
	2⅞	2424-13-27	680
	3⅜	2424-13-33	760
	3⅞	2424-13-37	839
	4⅞	2424-13-47	999
	5⅞	2424-13-57	1159
1⅞	1⅜	2424-17-13	520
	1⅞	2424-17-17	600
	2⅜	2424-17-23	680
	2⅞	2424-17-27	760
	3⅜	2424-17-33	839
	3⅞	2424-17-37	919
	4⅞	2424-17-47	1079
	5⅞	2424-17-57	1239
2⅜	1⅜	2424-23-13	600
	1⅞	2424-23-17	680
	2⅜	2424-23-23	760
	2⅞	2424-23-27	839
	3⅜	2424-23-33	919
	3⅞	2424-23-37	999
	4⅞	2424-23-47	1159
	5⅞	2424-23-57	1319
2⅞	1⅜	2424-27-13	680
	1⅞	2424-27-17	760
	2⅜	2424-27-23	839
	2⅞	2424-27-27	919
	3⅜	2424-27-33	999
	3⅞	2424-27-37	1079
	4⅞	2424-27-47	1239
	5⅞	2424-27-57	1399

A	B	ITEM NUMBER	NET WT.
3⅜	1⅜	2424-33-13	760
	1⅞	2424-33-17	839
	2⅜	2424-33-23	919
	2⅞	2424-33-27	999
	3⅜	2424-33-33	1079
	3⅞	2424-33-37	1159
	4⅞	2424-33-47	1319
	5⅞	2424-33-57	1479
3⅞	1⅜	2424-37-13	839
	1⅞	2424-37-17	919
	2⅜	2424-37-23	999
	2⅞	2424-37-27	1079
	3⅜	2424-37-33	1159
	3⅞	2424-37-37	1239
	4⅞	2424-37-47	1399
	5⅞	2424-37-57	1559
4⅞	1⅜	2424-47-13	999
	1⅞	2424-47-17	1079
	2⅜	2424-47-23	1159
	2⅞	2424-47-27	1239
	3⅜	2424-47-33	1319
	3⅞	2424-47-37	1399
	4⅞	2424-47-47	1559
	5⅞	2424-47-57	1718
5⅞	1⅜	2424-57-13	1159
	1⅞	2424-57-17	1239
	2⅜	2424-57-23	1319
	2⅞	2424-57-27	1399
	3⅜	2424-57-33	1479
	3⅞	2424-57-37	1559
	4⅞	2424-57-47	1718
	5⅞	2424-57-57	1878

Thickness of each plate is finish ground ± .001". Width and length finished square and parallel.

WHEN ORDERING, PLEASE SPECIFY:

1. Quantity & Item Number
2. No. 1, No. 2, No. 3 or No. 7 Steel (No. 7 Steel available standard only for plates up to and including 2⅞ thick)
3. L Dimension (Guide Pin Length)
4. Method of Shipment

Cavity Retainer Sets
23¾ × 29½ and 23¾ × 35½

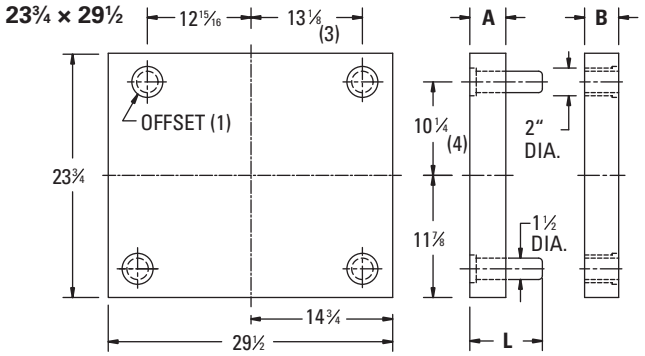

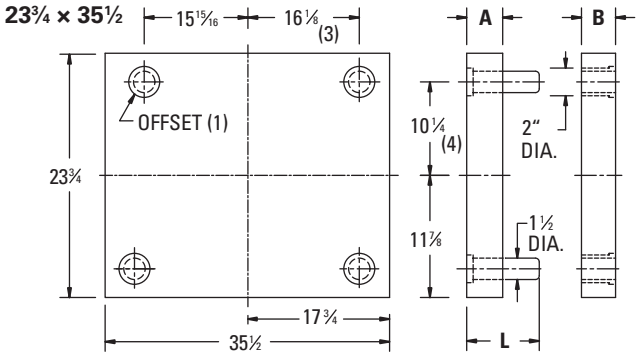

A	B	ITEM NUMBER	NET WT.
1⅜	1⅜	2429-13-13	546
	1⅞	2429-13-17	646
	2⅜	2429-13-23	745
	2⅞	2429-13-27	844
	3⅜	2429-13-33	943
	3⅞	2429-13-37	1043
	4⅞	2429-13-47	1241
	5⅞	2429-13-57	1439
1⅞	1⅜	2429-17-13	646
	1⅞	2429-17-17	745
	2⅜	2429-17-23	844
	2⅞	2429-17-27	943
	3⅜	2429-17-33	1043
	3⅞	2429-17-37	1142
	4⅞	2429-17-47	1340
	5⅞	2429-17-57	1539
2⅜	1⅜	2429-23-13	745
	1⅞	2429-23-17	844
	2⅜	2429-23-23	943
	2⅞	2429-23-27	1043
	3⅜	2429-23-33	1142
	3⅞	2429-23-37	1241
	4⅞	2429-23-47	1439
	5⅞	2429-23-57	1638
2⅞	1⅜	2429-27-13	844
	1⅞	2429-27-17	943
	2⅜	2429-27-23	1043
	2⅞	2429-27-27	1142
	3⅜	2429-27-33	1241
	3⅞	2429-27-37	1340
	4⅞	2429-27-47	1539
	5⅞	2429-27-57	1737

A	B	ITEM NUMBER	NET WT.
3⅜	1⅜	2429-33-13	943
	1⅞	2429-33-17	1043
	2⅜	2429-33-23	1142
	2⅞	2429-33-27	1241
	3⅜	2429-33-33	1340
	3⅞	2429-33-37	1439
	4⅞	2429-33-47	1638
	5⅞	2429-33-57	1836
3⅞	1⅜	2429-37-13	1043
	1⅞	2429-37-17	1142
	2⅜	2429-37-23	1241
	2⅞	2429-37-27	1340
	3⅜	2429-37-33	1439
	3⅞	2429-37-37	1539
	4⅞	2429-37-47	1737
	5⅞	2429-37-57	1936
4⅞	1⅜	2429-47-13	1241
	1⅞	2429-47-17	1340
	2⅜	2429-47-23	1439
	2⅞	2429-47-27	1539
	3⅜	2429-47-33	1638
	3⅞	2429-47-37	1737
	4⅞	2429-47-47	1936
	5⅞	2429-47-57	2134
5⅞	1⅜	2429-57-13	1439
	1⅞	2429-57-17	1539
	2⅜	2429-57-23	1638
	2⅞	2429-57-27	1737
	3⅜	2429-57-33	1836
	3⅞	2429-57-37	1936
	4⅞	2429-57-47	2134
	5⅞	2429-57-57	2333

A	B	ITEM NUMBER	NET WT.
1⅜	1⅜	2435-13-13	657
	1⅞	2435-13-17	777
	2⅜	2435-13-23	896
	2⅞	2435-13-27	1016
	3⅜	2435-13-33	1135
	3⅞	2435-13-37	1255
	4⅞	2435-13-47	1493
	5⅞	2435-13-57	1732
1⅞	1⅜	2435-17-13	777
	1⅞	2435-17-17	896
	2⅜	2435-17-23	1016
	2⅞	2435-17-27	1135
	3⅜	2435-17-33	1255
	3⅞	2435-17-37	1374
	4⅞	2435-17-47	1613
	5⅞	2435-17-57	1852
2⅜	1⅜	2435-23-13	896
	1⅞	2435-23-17	1016
	2⅜	2435-23-23	1135
	2⅞	2435-23-27	1255
	3⅜	2435-23-33	1374
	3⅞	2435-23-37	1493
	4⅞	2435-23-47	1732
	5⅞	2435-23-57	1971
2⅞	1⅜	2435-27-13	1016
	1⅞	2435-27-17	1135
	2⅜	2435-27-23	1255
	2⅞	2435-27-27	1374
	3⅜	2435-27-33	1493
	3⅞	2435-27-37	1613
	4⅞	2435-27-47	1852
	5⅞	2435-27-57	2091

A	B	ITEM NUMBER	NET WT.
3⅜	1⅜	2435-33-13	1135
	1⅞	2435-33-17	1255
	2⅜	2435-33-23	1374
	2⅞	2435-33-27	1493
	3⅜	2435-33-33	1613
	3⅞	2435-33-37	1732
	4⅞	2435-33-47	1971
	5⅞	2435-33-57	2210
3⅞	1⅜	2435-37-13	1255
	1⅞	2435-37-17	1374
	2⅜	2435-37-23	1493
	2⅞	2435-37-27	1613
	3⅜	2435-37-33	1732
	3⅞	2435-37-37	1852
	4⅞	2435-37-47	2091
	5⅞	2435-37-57	2329
4⅞	1⅜	2435-47-13	1493
	1⅞	2435-47-17	1613
	2⅜	2435-47-23	1732
	2⅞	2435-47-27	1852
	3⅜	2435-47-33	1971
	3⅞	2435-47-37	2091
	4⅞	2435-47-47	2329
	5⅞	2435-47-57	2568
5⅞	1⅜	2435-57-13	1732
	1⅞	2435-57-17	1852
	2⅜	2435-57-23	1971
	2⅞	2435-57-27	2091
	3⅜	2435-57-33	2210
	3⅞	2435-57-37	2329
	4⅞	2435-57-47	2568
	5⅞	2435-57-57	2807

Thickness of each plate is finish ground ± .001". Width and length finished square and parallel.

WHEN ORDERING, PLEASE SPECIFY:

1. Quantity & Item Number
2. No. 1, No. 2, No. 3 or No. 7 Steel (No. 7 Steel available standard only for plates up to and including 2⅞ thick)
3. L Dimension (Guide Pin Length)
4. Method of Shipment

STEEL DESCRIPTIONS

Three Steels for Structural Sections

DME NO. 1 STEEL

No. 1 Steel is a medium carbon (SAE 1030) or equivalent, silicon-killed forging quality steel with approximately 25% greater tensile strength than typical low-carbon warehouse steels. It machines easily, but is not "sticky," permitting a faster and smoother cut.

DME NO. 2 STEEL

No. 2 Steel is an AISI 4130 or equivalent type steel. It is supplied pre-heat treated to 28-34 HRC (271-321 Bhn). A high strength steel, it is ideal for cavity and core retainer plates, clamping plates and support plates in molds and dies.

DME NO. 7 STEEL

No. 7 Steel is a modified AISI 400 or equivalent series stainless steel for holder block applications. It is supplied pre-heat treated to 32-36 HRC (302-340 Bhn). This stainless steel offers corrosion-resistance and exceptional machinability but cannot be further hardened (see DME No. 6). For humid environments, corrosive plastics, "clean room" or "100% stainless" applications, it is an ideal choice for all structural (non-cavity/core) mold plates.

Three Steels for Cavities and Cores

DME NO. 3 STEEL

No. 3 Steel is a P-20 AISI 4130 (modified) type cavity steel. Exceptionally clean, it is pre-heat treated to 28-34 HRC (271-321 Bhn). It provides high hardness, good machinability and exceptional polishability for both plastics molds and die cast dies.

DME NO. 5 STEEL

No. 5 Steel is a thermal shock resistant, hotwork die steel (AISI-SAE H-13 type) or equivalent. Supplied fully annealed 13-20 HRC (approx. 200 Bhn) for easy machinability, it can be subsequently heat treated to the desired hardness with a minimum of deformation.

Mainly used for die cast dies, it is also suitable for plastics molds with exceptional hardness or polishability requirements.

DME NO. 5 Steel meets or exceeds the acceptance criteria established by the NADCA as detailed in Technical Digest Number 01-80-01D

DME NO. 6 STEEL

No. 6 Steel is T-420 type or equivalent stainless steel. It is supplied fully annealed to 8-23 HRC (179-241 Bhn), making it readily machinable. It can be used for injection, compression or transfer molds where the properties of the plastics materials or excessive condensation require a highly corrosion resistant cavity steel.

OTHER TYPES OF STEEL AVAILABLE ON SPECIAL ORDER. CONTACT DME.

DME Mold Plates

Over 400 standard sizes in four steel types

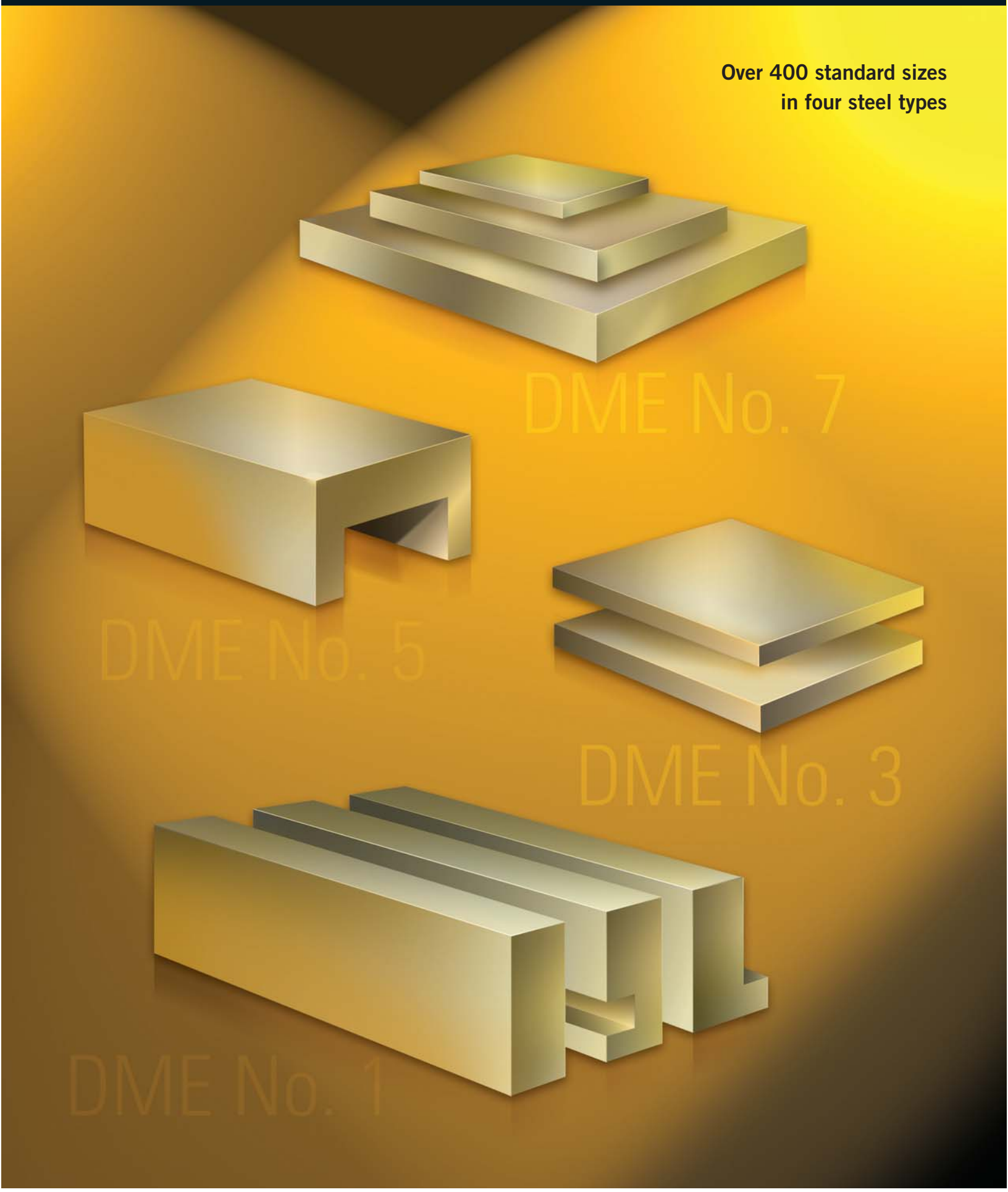

DME Standard

Die Blocks and Plates – No. 5 Steel

Available in over 300 special order sizes from 7⅞ × 7⅞ to 23¾ × 35½; 1⅜ to 11⅞ thick (depending on length and width). They are supplied in milled condition, with approximately .060" stock allowance.

DME No. 5 Steel meets or exceeds the acceptance criteria established by the NADCA as detailed in Technical Digest Number 01-80-01D.

SPECIAL ORDER SIZES: Please contact DME.

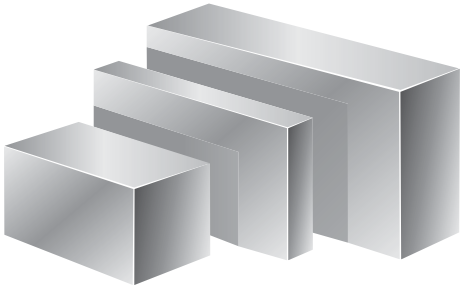

Mold Plates and Plate Items

Mold Plates are available in over 400 standard sizes, from 6" × 7" to 23¾ × 35½ in DME No. 1, No. 2, or No. 3 Steel. Plates from 7⅞ × 7⅞ to 23¾ × 35½ are also available in DME No. 7 Steel (up to 2⅞ thick).

In addition, they are offered in the following two conditions:

FINISH GROUND PLATES

Thickness is finish ground top and bottom to a tolerance of ± .001" with all edges finished square and parallel.

ROTARY GROUND PLATES

Thickness is rotary ground to a tolerance of +.015/+.020 or +.025/+.030 depending on plate width. Length and width are milled (+.000/+.005).

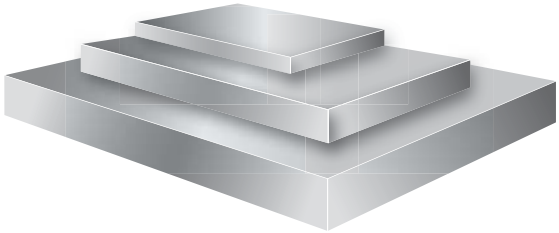

Additional standard plate items include:

EJECTOR AND EJECTOR RETAINER PLATES
PLATE ITEMS FOR SMALL MOLD BASES

Spacer Blocks

Plain, Slotted and Angle Spacers are all made from DME No. 1 Steel. Riser height (C dimension) is finish ground to plus or minus .001".

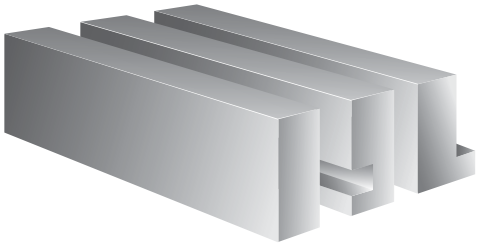

Ejector Housings

Rigid one-piece construction is made from DME No. 1 Steel. Available in over 150 standard sizes, corresponding to DME Standard "A" Series Mold Bases. The riser height (C dimension) is finish ground to plus or minus .001".

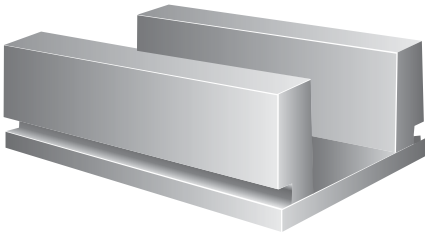

Die Blocks and Plates
7⅞ through 13⅜ wide – No. 5 Steel

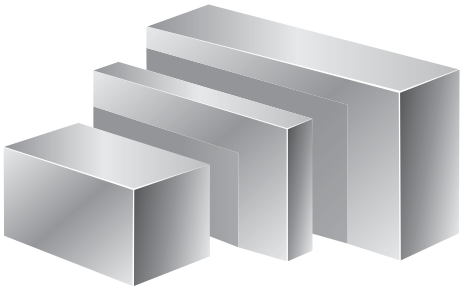

DME No. 5 steel is a thermal shock resistant, hotwork die steel (AISI-SAE H-13 type). Supplied fully annealed (approx. 200 Bhn) for easy machinability, it can be subsequently heat treated to the desired hardness with a minimum of deformation.

Mainly used for die cast dies, it is also suitable for plastics molds with exceptional hardness or polishability requirements.

DME No. 5 Steel meets or exceeds the acceptance criteria established by the NADCA as detailed in Technical Digest Number 01-80-01D.

Thickness, width and length are milled to approximately .060" oversized (.030" per side).

A	7⅞ × 7⅞	
	ITEM NUMBER	NET WT.
1⅜	88-13	25
1⅞	88-17	33
2⅜	88-23	42
2⅞	88-27	51
3⅜	88-33	60
3⅞	88-37	69
4⅞	88-47	86

A	9⅞ × 8"		9⅞ × 11⅞		9⅞ × 16"		9⅞ × 20"		A
	ITEM NUMBER	NET WT.	ITEM NUMBER	NET WT.	ITEM NUMBER	NET WT.	ITEM NUMBER	NET WT.	
1⅜	108-13	31	1012-13	46	1016-13	62	1020-13	77	1⅜
1⅞	108-17	42	1012-17	63	1016-17	84	1020-17	105	1⅞
2⅜	108-23	54	1012-23	79	1016-23	107	1020-23	133	2⅜
2⅞	108-27	65	1012-27	96	1016-27	129	1020-27	161	2⅞
3⅜	108-33	76	1012-33	113	1016-33	152	1020-33	189	3⅜
3⅞	108-37	87	1012-37	129	1016-37	174	1020-37	217	3⅞
4⅞	108-47	110	1012-47	162	1016-47	219	1020-47	273	4⅞
5⅞	108-57	132	1012-57	196	1016-57	263	1020-57	329	5⅞

A	10⅞ × 12"		10⅞ × 14"		10⅞ × 18"		10⅞ × 23½	
	ITEM NUMBER	NET WT.	ITEM NUMBER	NET WT.	ITEM NUMBER	NET WT.	ITEM NUMBER	NET WT.
1⅜	1112-13	51	1114-13	60	1118-13	77	1123-13	100
1⅞	1112-17	70	1114-17	81	1118-17	104	1123-17	136
2⅜	1112-23	88	1114-23	103	1118-23	132	1123-23	172
2⅞	1112-27	107	1114-27	125	1118-27	160	1123-27	209
3⅜	1112-33	125	1114-33	146	1118-33	188	1123-33	245
3⅞	1112-37	144	1114-37	168	1118-37	215	1123-37	281
4⅞	1112-47	181	1114-47	211	1118-47	271	1123-47	353
5⅞	1112-57	218	1114-57	254	1118-57	326	1123-57	426

A	11⅞ × 12"		11⅞ × 15"	
	ITEM NUMBER	NET WT.	ITEM NUMBER	NET WT.
1⅜	1212-13	56	1215-13	70
1⅞	1212-17	76	1215-17	95
2⅜	1212-23	96	1215-23	120
2⅞	1212-27	117	1215-27	146
3⅜	1212-33	137	1215-33	171
3⅞	1212-37	157	1215-37	196
4⅞	1212-47	197	1215-47	247
5⅞	1212-57	238	1215-57	297
7⅞	1212-77	318	1215-77	398

A	11⅞ × 20"		11⅞ × 23½	
	ITEM NUMBER	NET WT.	ITEM NUMBER	NET WT.
1⅜	1220-13	93	1223-13	109
1⅞	1220-17	127	1223-17	149
2⅜	1220-23	160	1223-23	188
2⅞	1220-27	194	1223-27	228
3⅜	1220-33	228	1223-33	267
3⅞	1220-37	261	1223-37	307
4⅞	1220-47	329	1223-47	386
5⅞	1220-57	396	1223-57	465
7⅞	1220-77	530	1223-77	623

A	13⅜ × 15"		13⅜ × 18"		13⅜ × 20¾		13⅜ × 23½	
	ITEM NUMBER	NET WT.	ITEM NUMBER	NET WT.	ITEM NUMBER	NET WT.	ITEM NUMBER	NET WT.
1⅜	1315-13	79	1318-13	94	1321-13	109	1323-13	123
1⅞	1315-17	107	1318-17	128	1321-17	148	1323-17	167
2⅜	1315-23	135	1318-23	162	1321-23	187	1323-23	212
2⅞	1315-27	164	1318-27	197	1321-27	227	1323-27	257
3⅜	1315-33	192	1318-33	231	1321-33	266	1323-33	301
3⅞	1315-37	221	1318-37	265	1321-37	305	1323-37	346
4⅞	1315-47	278	1318-47	333	1321-47	384	1323-47	435
5⅞	1315-57	334	1318-57	401	1321-57	462	1323-57	524
7⅞	1315-77	448	1318-77	538	1321-77	620	1323-77	702

WHEN ORDERING, PLEASE SPECIFY:

1. Quantity & Item Number
2. No. 5 Steel
3. Method of Shipment

ALSO AVAILABLE:

1. Rotary ground thickness
2. Finish ground thickness and/or edges
3. Standard width and thickness up to 12 feet long. For prices, contact DME.

SPECIAL ORDER SIZES: Please contact DME.

Die Blocks and Plates
15⅞ through 23¾ wide – No. 5 Steel

A	15⅞ × 16"		15⅞ × 20"		15⅞ × 23½		15⅞ × 26"	
	ITEM NUMBER	NET WT.	ITEM NUMBER	NET WT.	ITEM NUMBER	NET WT.	ITEM NUMBER	NET WT.
1⅜	1616-13	99	1620-13	124	1623-13	146	1626-13	161
1⅞	1616-17	135	1620-17	169	1623-17	199	1626-17	220
2⅜	1616-23	171	1620-23	214	1623-23	252	1626-23	278
2⅞	1616-27	207	1620-27	259	1623-27	304	1626-27	337
3⅜	1616-33	243	1620-33	304	1623-33	357	1626-33	395
3⅞	1616-37	279	1620-37	349	1623-37	410	1626-37	454
4⅞	1616-47	351	1620-47	439	1623-47	516	1626-47	571
5⅞	1616-57	423	1620-57	529	1623-57	621	1626-57	687
7⅞	1616-77	567	1620-77	709	1623-77	833	1626-77	921
8⅞	1616-87	639	1620-87	799	1623-87	938	1626-87	1038
9⅞	1616-97	711	1620-97	889	1623-97	1044	1626-97	1155
11⅞	1616-117	855	1620-117	1069	1623-117	1256	1626-117	1389

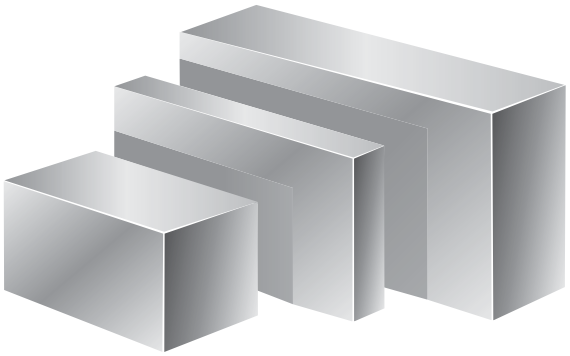

A	17⅞ × 18"		17⅞ × 20"		17⅞ × 23½		17⅞ × 26"		17⅞ × 29½		17⅞ × 35½		A
	ITEM NUMBER	NET WT.	ITEM NUMBER	NET WT.	ITEM NUMBER	NET WT.	ITEM NUMBER	NET WT.	ITEM NUMBER	NET WT.	ITEM NUMBER	NET WT.	
1⅞	1818-17	171	1820-17	190	1823-17	224	1826-17	247	1829-17	281	1835-17	338	1⅞
2⅜	1818-23	217	1820-23	241	1823-23	283	1826-23	313	1829-23	355	1835-23	427	2⅜
2⅞	1818-27	263	1820-27	292	1823-27	343	1826-27	379	1829-27	430	1835-27	517	2⅞
3⅜	1818-33	308	1820-33	342	1823-33	402	1826-33	445	1829-33	505	1835-33	607	3⅜
3⅞	1818-37	354	1820-37	393	1823-37	462	1826-37	511	1829-37	579	1835-37	697	3⅞
4⅞	1818-47	445	1820-47	494	1823-47	581	1826-47	642	1829-47	729	1835-47	877	4⅞
5⅞	1818-57	536	1820-57	596	1823-57	700	1826-57	774	1829-57	878	1835-57	1057	5⅞
7⅞	1818-77	718	1820-77	798	1823-77	938	1826-77	1037	1829-77	1177	1835-77	1416	7⅞
8⅞	1818-87	809	1820-87	899	1823-87	1057	1826-87	1169	1829-87	1326	1835-87	1596	8⅞
9⅞	1818-97	901	1820-97	1001	1823-97	1176	1826-97	1301	1829-97	1476	1835-97	1776	9⅞
11⅞	1818-117	1083	1820-117	1203	1823-117	1414	1826-117	1564	1829-117	1774	1835-117	2135	11⅞

A	19½ × 23¾	
	ITEM NUMBER	NET WT.
2⅜	1924-23	312
2⅞	1924-27	378
3⅜	1924-33	443
3⅞	1924-37	509
4⅞	1924-47	640
5⅞	1924-57	771
7⅞	1924-77	1034
8⅞	1924-87	1165
9⅞	1924-97	1296
11⅞	1924-117	1559

A	23¾ × 23¾		23¾ × 29½		23¾ × 35½	
	ITEM NUMBER	NET WT.	ITEM NUMBER	NET WT.	ITEM NUMBER	NET WT.
2⅜	2424-23	380	2429-23	472	2435-23	568
2⅞	2424-27	460	2429-27	571	2435-27	687
3⅜	2424-33	540	2429-33	670	2435-33	807
3⅞	2424-37	620	2429-37	770	2435-37	926
4⅞	2424-47	780	2429-47	968	2435-47	1165
5⅞	2424-57	939	2429-57	1167	2435-57	1404
7⅞	2424-77	1259	2429-77	1564	2435-77	1882
8⅞	2424-87	1419	2429-87	1762	2435-87	2120
9⅞	2424-97	1579	2429-97	1961	2435-97	2359
11⅞	2424-117	1898	2429-117	2358	2435-117	2837

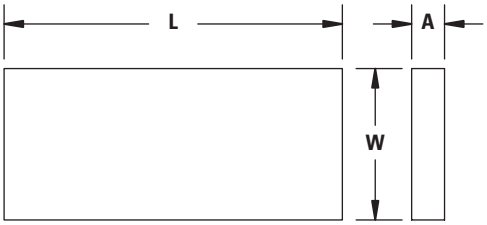

Thickness, width and length are milled to approximately .060" oversized (.030" per side).

WHEN ORDERING, PLEASE SPECIFY:

1. Quantity & Item Number
2. No. 5 Steel
3. Method of Shipment

ALSO AVAILABLE:

1. Rotary ground thickness
2. Finish ground thickness and/or edges
3. Standard width and thickness up to 12 feet long. For prices, contact DME.

SPECIAL ORDER SIZES: Please contact DME.

DME Standard
Cavity Insert Blocks – 3", 4", 5" and 6" Series

Thickness, width and length are finished square and parallel .015" to .020" oversized (.0075" to .010" per side) to permit either fitting at assembly (No. 3 Steel) or finish grinding after heat treatment (No. 5 Steel, No. 6 Steel and AISI S-7 Steel).

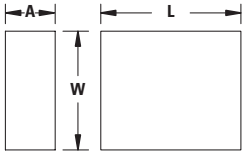

A	3" (W) × 3" (L)					3" (W) × 4" (L)					3" (W) × 5" (L)					3" (W) × 6" (L)						3" (W) × 8" (L)				
	ITEM NO.	MATERIAL			NET WT.	ITEM NO.	MATERIAL			NET WT.	ITEM NO.	MATERIAL			NET WT.	ITEM NO.	MATERIAL				NET WT.	ITEM NO.	MATERIAL			NET WT.
		NO. 3	NO. 5	S-7			NO. 3	NO. 5	S-7			NO. 3	NO. 5	S-7			NO. 3	NO. 6	NO. 5	S-7			NO. 3	NO. 5	S-7	
⅞	33-7	—	•	•	2.2	34-7	••	•	•	2.0	35-7	•	•	•	3.7	36-7	•	•	•	•	4.5	38-7	•	•	•	5.9
1⅜	33-13	•	•	•	3.5	34-13	••	•	•	4.7	35-13	•	•	•	5.8	36-13	•	•	•	•	7.0	38-13	•	•	•	9.3
1⅞	33-17	•	•	•	4.4	34-17	•	•	•	6.4	35-17	•	•	•	8.0	36-17	•	—	—	—	9.6	38-17	•	•	•	12.7
2⅜	33-23	•	•	•	6.1	34-23	—	•	•	8.1	35-23	•	•	•	10.1	36-23	•	•	•	•	12.1	—	—	—	—	—
2⅞	—	—	—	—	—	—	—	—	—	—	35-27	—	•	•	12.2	—	—	—	—	—	—	—	—	—	—	—
3⅜	—	—	—	—	—	—	—	—	—	—	—	—	—	—	—	36-33	•	—	—	—	17.2	38-33	—	•	•	22.9

A	4" (W) × 4" (L)					4" (W) × 5" (L)					4" (W) × 6" (L)					4" (W) × 8" (L)				
	ITEM NO.	MATERIAL			NET WT.	ITEM NO.	MATERIAL			NET WT.	ITEM NO.	MATERIAL			NET WT.	ITEM NO.	MATERIAL			NET WT.
		NO. 3	NO. 6	NO. 5	S-7		NO. 3	NO. 5	S-7			NO. 3	NO. 5	S-7			NO. 3	NO. 6	NO. 5	S-7	
⅞	44-7	•	•	•	•	4.0	45-7	••	•	•	5.0	46-7	•	•	•	5.9	48-7	•	•	—	—	7.9
1⅜	44-13	•	•	•	•	6.2	45-13	••	•	•	7.8	46-13	•	•	•	9.3	48-13	•	•	•	•	12.5
1⅞	44-17	•	•	•	•	8.5	45-17	••	•	•	10.6	46-17	•	•	•	12.7	48-17	•	•	•	•	17.0
2⅜	44-23	•	—	•	•	10.8	45-23	•	•	•	13.5	46-23	•	•	•	16.1	48-23	•	•	—	—	21.5

A	5" (W) × 5" (L)					5" (W) × 6" (L)					5" (W) × 8" (L)				
	ITEM NO.	MATERIAL			NET WT.	ITEM NO.	MATERIAL			NET WT.	ITEM NO.	MATERIAL			NET WT.
		NO. 3	NO. 5	S-7			NO. 3	NO. 5	S-7			NO. 3	NO. 5	S-7	
⅞	55-7	•	•	•	6.2	56-7	••	•	•	7.4	58-7	••	•	•	9.9
1⅜	55-13	•	•	•	9.7	56-13	••	•	•	11.7	58-13	••	•	•	15.6
1⅞	55-17	•	•	•	13.3	56-17	••	•	•	15.9	58-17	••	•	•	21.2
2⅜	55-23	•	—	—	16.8	56-23	•	•	•	20.2	58-23	•	—	—	26.9
2⅞	—	—	—	—	—	56-27	—	•	•	24.4	58-27	•	—	—	32.6
3⅜	—	—	—	—	—	56-33	—	—	—	28.7	—	—	—	—	—

A	6" (W) × 6" (L)					6" (W) × 8" (L)			
	ITEM NO.	MATERIAL			NET WT.	ITEM NO.	MATERIAL			NET WT.
		NO. 3	NO. 6	NO. 5	S-7		NO. 3	NO. 5	S-7	
⅞	66-7	•	•	•	•	8.9	68-7	•	•	•	11.4
1⅜	66-13	•	•	•	•	14.0	68-13	•	•	•	18.7
1⅞	66-17	•	•	•	•	19.1	68-17	•	•	•	25.5
2⅜	66-23	•	—	•	•	24.2	68-23	•	—	—	32.3
2⅞	66-27	•	—	•	•	29.3	68-27	•	—	—	39.1
3⅜	—	—	—	—	—	—	68-33	•	•	•	45.9
3⅞	—	—	—	—	—	—	68-37	•	—	—	52.7

AVAILABLE STANDARD

DME No. 3 Steel

DME No. 3 Steel is a P-20 AISI 4130 (modified) type cavity steel, pre-heat treated to 277-331 Bhn. Exceptionally clean, it provides high hardness, good machinability and exceptional polishability for both plastics molds and die cast dies.

NOTE: Sizes above marked with a double dot (••) are also available as finish ground mold plates (beginning on the next page). Please specify **insert block** when ordering these sizes from this page.

DME No. 6 Steel

DME No. 6 Steel is a T-420 type stainless steel. It is supplied fully annealed to 220 Bhn (200-240), making it readily machinable. It can be used for injection, compression or transfer molds where the properties of the plastics materials or excessive condensation require a highly corrosion-resistant cavity steel.

AVAILABLE BY SPECIAL ORDER

DME No. 5 Steel

DME No. 5 Steel is a thermal shock resistant, hotwork die steel (AISI-SAE H-13 type). Supplied fully annealed (approx. 200 Bhn) for easy machinability, it can be subsequently heat treated to the desired hardness with a minimum of deformation. Mainly used for die cast dies, it is also suitable for plastics molds with exceptional hardness or polishability requirements.

DME No. 5 Steel meets or exceeds the acceptance criteria established by the NADCA as detailed in Technical Digest Number 01-80-01D.

DME AISI S-7 Steel *(NOTE: AISI S-7 Steel is not a stainless steel and is not related to DME No. 7 Steel.)*

DME S-7 Steel is supplied fully annealed to 225 Bhn maximum. This shock resisting tool steel combines toughness and wear resistance along with ease of machining and heat treatment. S-7 can be used for both hot and cold work applications as a result of its combination of properties. Due to the unique mold quality composition, minimal distortion occurs during the heat treating process. DME Mold Quality S-7 is selectively melted for improved cleanliness and excellent polishability. Follow standard procedures for heat treating AISI S-7 Steel. Double tempering is recommended.

WHEN ORDERING, PLEASE SPECIFY:

1. Quantity & Item Number
2. No. 3 Steel, No. 5 Steel, No. 6 Steel, or AISI S-7 Steel
3. Method of Shipment

***NOTE:**
Net weight is specified for DME No. 3 Steel, No. 5 Steel, No. 6 Steel, and AISI S-7.

AVAILABLE STANDARD IN: No. 3 and No. 6 Steel.
AVAILABLE AS A SPECIAL ORDER IN: No. 5 Steel and AISI S-7.

Finish Ground Mold Plates | Rotary Ground Mold Plates 6”, 8 15/16, 9” and 9 7/8 wide

Finish Ground Mold Plates

AVAILABLE IN:

DME No. 1, No. 2 or No. 3 Steel

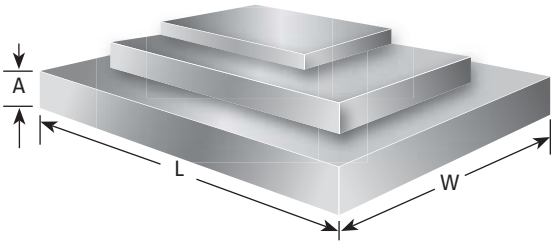

Thickness (A) of plate is finish ground ±.001 Width and length are finished square and parallel.

A	6" × 7"	
	ITEM NUMBER	NET WT.
7/8	67-7	11
1 3/8	67-13	17
1 7/8	67-17	23
2 3/8	67-23	29

A	6" × 9"*	
	ITEM NUMBER	NET WT.
7/8	69-7	14
1 3/8	69-13	22
1 7/8	69-17	29

*No. 2 or No. 3 Steel only.

A	6" × 10 7/8		9" × 9"*	
	ITEM NUMBER	NET WT.	ITEM NUMBER	NET WT.
7/8	611-7	17	99-7	21
1 3/8	611-13	26	99-13	32
1 7/8	611-17	35	99-17	44
2 3/8	611-23	44		
2 7/8	611-27	54		
3 3/8	611-33	63		
3 7/8	611-37	72		
4 7/8	611-47	91		
5 7/8	611-57	109		

*No. 2 or No. 3 Steel only.

A	8 15/16 × 11 7/8		9" × 11 7/8		9 7/8 × 7 7/8	
	ITEM NUMBER	NET WT.	ITEM NUMBER	NET WT.	ITEM NUMBER	NET WT.
7/8	912V-7	27	912M-7	27	108R-7	20
1 3/8	912V-13	42	912M-13	42	108R-13	31
1 7/8	912V-17	57	912M-17	57	108R-17	42
2 3/8	912V-23	72	912M-23	72	108R-23	53
2 7/8	912V-27	88	912M-27	88		
3 3/8	912V-33	103	912M-33	103		
3 7/8	912V-37	118	912M-37	118		
4 7/8	912V-47	148	912M-47	148		
5 7/8	912V-57	178	912M-57	178		

Rotary Ground Mold Plates

TOLERANCES	
Thickness (A)	+.015 to +.020
Width (W) Nominal +.0025	+.000/+.005
Length (L) Nominal +.0025	+.000/+.005

ALL “A” THICKNESSES AVAILABLE IN:

DME No. 1, No. 2 or No. 3 Steel

Thickness (A) of plate is rotary ground. Width and length are milled.

A	6" × 7"	
	ITEM NUMBER	NET WT.
7/8	67-7RGM	11
1 3/8	67-13RGM	17
1 7/8	67-17RGM	23
2 3/8	67-23RGM	29

A	6" × 9"*	
	ITEM NUMBER	NET WT.
7/8	69-7RGM	14
1 3/8	69-13RGM	22
1 7/8	69-17RGM	29

*No. 2 or No. 3 Steel only.

A	6" × 10 7/8		9" × 9"*	
	ITEM NUMBER	NET WT.	ITEM NUMBER	NET WT.
7/8	611-7RGM	17	99-7RGM	21
1 3/8	611-13RGM	26	99-13RGM	32
1 7/8	611-17RGM	35	99-17RGM	44
2 3/8	611-23RGM	44		
2 7/8	611-27RGM	54		
3 3/8	611-33RGM	63		
3 7/8	611-37RGM	72		
4 7/8	611-47RGM	91		
5 7/8	611-57RGM	109		

*No. 2 or No. 3 Steel only.

A	9" × 11 7/8**		9 7/8 × 7 7/8	
	ITEM NUMBER	NET WT.	ITEM NUMBER	NET WT.
7/8	912-7RGM	27	108R-7RGM	20
1 3/8	912-13RGM	42	108R-13RGM	31
1 7/8	912-17RGM	57	108R-17RGM	42
2 3/8	912-23RGM	72	108R-23RGM	53
2 7/8	912-27RGM	88		
3 3/8	912-33RGM	103		
3 7/8	912-37RGM	118		
4 7/8	912-47RGM	148		
5 7/8	912-57RGM	178		

**Suitable for both Van Dorn or Moslo applications.

WHEN ORDERING, PLEASE SPECIFY:

1. Quantity & Item Number
2. No. 1, No. 2 or No. 3 Steel
3. Method of Shipment

Finish Ground Mold Plates 7⅞ through 11⅞ wide

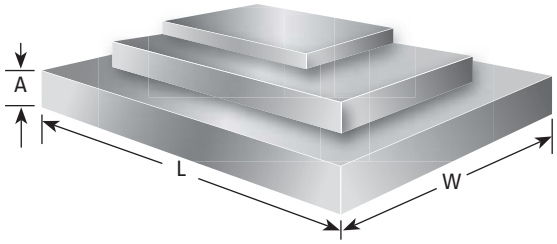

Thickness (A) of plate is finish ground ±.001
Width and length are finished square and parallel.

ALL "A" THICKNESSES AVAILABLE IN:

- DME No. 1 Steel – SAE 1030 type
- DME No. 2 Steel – AISI 4130 type, pre-heat treated (271-321 Bhn; 28-34 HRC)
- DME No. 3 Steel – P-20 type, pre-heat treated (271-321 Bhn; 28-34 HRC)

PLATES WITH "A" THICKNESSES FROM ⅞ TO 2⅞ ALSO AVAILABLE IN:

- DME No. 7 Steel – Modified AISI 400 series stainless steel pre-heat treated (302-340 Bhn; 32-36 HRC)

THICKER PLATES IN DME NO. 7 STEEL ARE AVAILABLE ON SPECIAL ORDER

A	7⅞ × 7⅞		7⅞ × 11⅞		A	9⅞ × 8"		9⅞ × 11⅞	
	ITEM NUMBER	NET WT.	ITEM NUMBER	NET WT.		ITEM NUMBER	NET WT.	ITEM NUMBER	NET WT.
⅞	88-7	16	812-7	24	⅞	108-7	20	1012-7	30
1⅜	88-13	25	812-13	37	1⅜	108-13	31	1012-13	46
1⅞	88-17	33	812-17	50	1⅞	108-17	42	1012-17	63
2⅜	88-23	42	812-23	63	2⅜	108-23	54	1012-23	79
2⅞	88-27	51	812-27	76	2⅞	108-27	65	1012-27	96
3⅜	88-33	60	812-33	89	3⅜	108-33	76	1012-33	113
3⅞	88-37	69	812-37	102	3⅞	108-37	87	1012-37	129
4⅞	88-47	86	812-47	129	4⅞	108-47	110	1012-47	162
5⅞	88-57	104	812-57	155	5⅞	108-57	132	1012-57	196

A	9⅞ 16"		9⅞ 20"		9⅞ 23¾		10⅞ 12"		10⅞ 14"		10⅞ 18"		10⅞ 23½		A
	ITEM NUMBER	NET WT.	ITEM NUMBER	NET WT.	ITEM NUMBER	NET WT.	ITEM NUMBER	NET WT.	ITEM NUMBER	NET WT.	ITEM NUMBER	NET WT.	ITEM NUMBER	NET WT.	
⅞	1016-7	40	1020-7	49	1024-7	59	1112-7	33	1114-7	38	1118-7	49	1123-7	64	⅞
1⅜	1016-13	62	1020-13	77	1024-13	92	1112-13	51	1114-13	60	1118-13	77	1123-13	100	1⅜
1⅞	1016-17	84	1020-17	105	1024-17	125	1112-17	70	1114-17	81	1118-17	104	1123-17	136	1⅞
2⅜	1016-23	107	1020-23	133	1024-23	158	1112-23	88	1114-23	103	1118-23	132	1123-23	172	2⅜
2⅞	1016-27	129	1020-27	161	1024-27	192	1112-27	107	1114-27	125	1118-27	160	1123-27	209	2⅞
3⅜	1016-33	152	1020-33	189	1024-33	225	1112-33	125	1114-33	146	1118-33	188	1123-33	245	3⅜
3⅞	1016-37	174	1020-37	217	1024-37	258	1112-37	144	1114-37	168	1118-37	215	1123-37	281	3⅞
4⅞	1016-47	219	1020-47	273	1024-47	324	1112-47	181	1114-47	211	1118-47	271	1123-47	353	4⅞
5⅞	1016-57	263	1020-57	329	1024-57	391	1112-57	218	1114-57	254	1118-57	326	1123-57	426	5⅞

A	11⅞ 12"		11⅞ 15"		11⅞ 17½		11⅞ 20"		11⅞ 23½		11⅞ 29½		A
	ITEM NUMBER	NET WT.	ITEM NUMBER	NET WT.	ITEM NUMBER	NET WT.	ITEM NUMBER	NET WT.	ITEM NUMBER	NET WT.	ITEM NUMBER	NET WT.	
⅞	1212-7	36	1215-7	45	1217-7	52	1220-7	59	1223-7	70	1229-7	87	⅞
1⅜	1212-13	56	1215-13	70	1217-13	81	1220-13	93	1223-13	109	1229-13	137	1⅜
1⅞	1212-17	76	1215-17	95	1217-17	111	1220-17	127	1223-17	149	1229-17	187	1⅞
2⅜	1212-23	96	1215-23	120	1217-23	140	1220-23	160	1223-23	188	1229-23	236	2⅜
2⅞	1212-27	117	1215-27	146	1217-27	170	1220-27	194	1223-27	228	1229-27	286	2⅞
3⅜	1212-33	137	1215-33	171	1217-33	199	1220-33	228	1223-33	267	1229-33	335	3⅜
3⅞	1212-37	157	1215-37	196	1217-37	229	1220-37	261	1223-37	307	1229-37	385	3⅞
4⅞	1212-47	197	1215-47	247	1217-47	287	1220-47	329	1223-47	386	1229-47	484	4⅞
5⅞	1212-57	238	1215-57	297	1217-57	346	1220-57	396	1223-57	465	1229-57	584	5⅞

WHEN ORDERING, PLEASE SPECIFY:

1. Quantity & Item Number
2. No. 1, No. 2, No. 3 or No. 7 Steel
3. Method of Shipment

Rotary Ground Mold Plates 7⅞ through 11⅞ wide

TOLERANCES	88, 812, 108, 1012, 1016, 1112, 1114, 1118, 1212, 1215	1020, 1024, 1123, 1217, 1220, 1223, 1229
Thickness (A)	+.015 to +.020	+.025 to +.030
Width (W) Nominal +.0025	+.000/+.005	
Length (L) Nominal +.0025	+.000/+.005	

Thickness (A) of plate is rotary ground. Width and length are milled.

ALL "A" THICKNESSES AVAILABLE IN:

- DME No. 1 Steel – SAE 1030 type
- DME No. 2 Steel – AISI 4130 type, pre-heat treated (271-321 Bhn; 28-34 HRC)
- DME No. 3 Steel – P-20 type, pre-heat treated (271-321 Bhn; 28-34 HRC)

PLATES WITH "A" THICKNESSES FROM ⅞ TO 2⅞ ALSO AVAILABLE IN:

- DME No. 7 Steel – Modified AISI 400 series stainless steel pre-heat treated (302-340 Bhn; 32-36 HRC)

THICKER PLATES IN DME NO. 7 STEEL ARE AVAILABLE ON SPECIAL ORDER

A	7⅞ × 7⅞		7⅞ × 11⅞		9⅞ × 8"		9⅞ × 11⅞	
	ITEM NUMBER	NET WT.	ITEM NUMBER	NET WT.	ITEM NUMBER	NET WT.	ITEM NUMBER	NET WT.
⅞	88-7RGM	16	812-7RGM	24	108-7RGM	20	1012-7RGM	30
1⅜	88-13RGM	25	812-13RGM	37	108-13RGM	31	1012-13RGM	46
1⅞	88-17RGM	33	812-17RGM	50	108-17RGM	42	1012-17RGM	63
2⅜	88-23RGM	42	812-23RGM	63	108-23RGM	54	1012-23RGM	79
2⅞	88-27RGM	51	812-27RGM	76	108-27RGM	65	1012-27RGM	96
3⅜	88-33RGM	60	812-33RGM	89	108-33RGM	76	1012-33RGM	113
3⅞	88-37RGM	69	812-37RGM	102	108-37RGM	87	1012-37RGM	129
4⅞	88-47RGM	86	812-47RGM	129	108-47RGM	110	1012-47RGM	162
5⅞	88-57RGM	104	812-57RGM	155	108-57RGM	132	1012-57RGM	196

A	9⅞ × 16"		9⅞ × 20"		9⅞ × 23¾		10⅞ × 12"		10⅞ × 14"		10⅞ × 18"		10⅞ × 23½		A
	ITEM NUMBER	NET WT.	ITEM NUMBER	NET WT.	ITEM NUMBER	NET WT.	ITEM NUMBER	NET WT.	ITEM NUMBER	NET WT.	ITEM NUMBER	NET WT.	ITEM NUMBER	NET WT.	
⅞	1016-7RGM	40	1020-7RGM	49	1024-7RGM	59	1112-7RGM	33	1114-7RGM	38	1118-7RGM	49	1123-7RGM	64	⅞
1⅜	1016-13RGM	62	1020-13RGM	77	1024-13RGM	92	1112-13RGM	51	1114-13RGM	60	1118-13RGM	77	1123-13RGM	100	1⅜
1⅞	1016-17RGM	84	1020-17RGM	105	1024-17RGM	125	1112-17RGM	70	1114-17RGM	81	1118-17RGM	104	1123-17RGM	136	1⅞
2⅜	1016-23RGM	107	1020-23RGM	133	1024-23RGM	158	1112-23RGM	88	1114-23RGM	103	1118-23RGM	132	1123-23RGM	172	2⅜
2⅞	1016-27RGM	129	1020-27RGM	161	1024-27RGM	192	1112-27RGM	107	1114-27RGM	124	1118-27RGM	160	1123-27RGM	209	2⅞
3⅜	1016-33RGM	152	1020-33RGM	189	1024-33RGM	225	1112-33RGM	125	1114-33RGM	146	1118-33RGM	188	1123-33RGM	245	3⅜
3⅞	1016-37RGM	174	1020-37RGM	217	1024-37RGM	258	1112-37RGM	144	1114-37RGM	168	1118-37RGM	215	1123-37RGM	281	3⅞
4⅞	1016-47RGM	219	1020-47RGM	273	1024-47RGM	324	1112-47RGM	181	1114-47RGM	211	1118-47RGM	271	1123-47RGM	353	4⅞
5⅞	1016-57RGM	263	1020-57RGM	329	1024-57RGM	391	1112-57RGM	218	1114-57RGM	254	1118-57RGM	326	1123-57RGM	426	5⅞

A	11⅞ × 12"		11⅞ × 15"		11⅞ × 17½		11⅞ × 20"		11⅞ × 23½		11⅞ × 29½		A
	ITEM NUMBER	NET WT.	ITEM NUMBER	NET WT.	ITEM NUMBER	NET WT.	ITEM NUMBER	NET WT.	ITEM NUMBER	NET WT.	ITEM NUMBER	NET WT.	
⅞	1212-7RGM	36	1215-7RGM	45	1217-7RGM	52	1220-7RGM	59	1223-7RGM	70	1229-7RGM	87	⅞
1⅜	1212-13RGM	56	1215-13RGM	70	1217-13RGM	81	1220-13RGM	93	1223-13RGM	109	1229-13RGM	137	1⅜
1⅞	1212-17RGM	76	1215-17RGM	95	1217-17RGM	111	1220-17RGM	127	1223-17RGM	149	1229-17RGM	187	1⅞
2⅜	1212-23RGM	96	1215-23RGM	120	1217-23RGM	140	1220-23RGM	160	1223-23RGM	188	1229-23RGM	236	2⅜
2⅞	1212-27RGM	117	1215-27RGM	146	1217-27RGM	170	1220-27RGM	194	1223-27RGM	228	1229-27RGM	286	2⅞
3⅜	1212-33RGM	137	1215-33RGM	171	1217-33RGM	199	1220-33RGM	228	1223-33RGM	267	1229-33RGM	335	3⅜
3⅞	1212-37RGM	157	1215-37RGM	196	1217-37RGM	229	1220-37RGM	261	1223-37RGM	307	1229-37RGM	385	3⅞
4⅞	1212-47RGM	197	1215-47RGM	247	1217-47RGM	287	1220-47RGM	329	1223-47RGM	386	1229-47RGM	484	4⅞
5⅞	1212-57RGM	238	1215-57RGM	297	1217-57RGM	346	1220-57RGM	396	1223-57RGM	465	1229-57RGM	584	5⅞

WHEN ORDERING, PLEASE SPECIFY:

1. Quantity & Item Number
2. No. 1, No. 2, No. 3 or No. 7 Steel
3. Method of Shipment

Finish Ground Mold Plates 13⅜ through 15⅞ wide

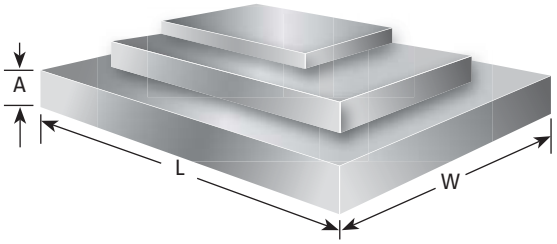

Thickness (A) of plate is finish ground ±.001. Width and length are finished square and parallel.

ALL "A" THICKNESSES AVAILABLE IN:

- DME No. 1 Steel – SAE 1030 type
- DME No. 2 Steel – AISI 4130 type, pre-heat treated (271-321 Bhn; 28-34 HRC)
- DME No. 3 Steel – P-20 type, pre-heat treated (271-321 Bhn; 28-34 HRC)

PLATES WITH "A" THICKNESSES FROM ⅞ TO 2⅞ ALSO AVAILABLE IN:

- DME No. 7 Steel – Modified AISI 400 series stainless steel pre-heat treated (302-340 Bhn; 32-36 HRC)

THICKER PLATES IN DME NO. 7 STEEL ARE AVAILABLE ON SPECIAL ORDER

A	13⅜ × 15"		13⅜ × 18"		13⅜ × 20¾	
	ITEM NUMBER	NET WT.	ITEM NUMBER	NET WT.	ITEM NUMBER	NET WT.
⅞	1315-7	50	1318-7	60	1321-7	69
1⅜	1315-13	79	1318-13	94	1321-13	109
1⅞	1315-17	107	1318-17	128	1321-17	148
2⅜	1315-23	135	1318-23	162	1321-23	187
2⅞	1315-27	164	1318-27	197	1321-27	227
3⅜	1315-33	192	1318-33	231	1321-33	266
3⅞	1315-37	221	1318-37	265	1321-37	305
4⅞	1315-47	278	1318-47	333	1321-47	384
5⅞	1315-57	334	1318-57	401	1321-57	462

A	13⅜ × 23½		13⅜ × 26"		13⅜ × 29½		A
	ITEM NUMBER	NET WT.	ITEM NUMBER	NET WT.	ITEM NUMBER	NET WT.	
⅞	1323-7	78	1326-7	87	1329-7	98	⅞
1⅜	1323-13	123	1326-13	136	1329-13	154	1⅜
1⅞	1323-17	167	1326-17	185	1329-17	210	1⅞
2⅜	1323-23	212	1326-23	234	1329-23	266	2⅜
2⅞	1323-27	256	1326-27	284	1329-27	322	2⅞
3⅜	1323-33	301	1326-33	333	1329-33	378	3⅜
3⅞	1323-37	346	1326-37	382	1329-37	434	3⅞
4⅞	1323-47	435	1326-47	481	1329-47	545	4⅞
5⅞	1323-57	524	1326-57	579	1329-57	657	5⅞

A	14⅞ × 17⅞		14⅞ × 23¾		14⅞ × 29½		A
	ITEM NUMBER	NET WT.	ITEM NUMBER	NET WT.	ITEM NUMBER	NET WT.	
⅞	1518-7	66	1524-7	88	1529-7	109	⅞
1⅜	1518-13	104	1524-13	138	1529-13	171	1⅜
1⅞	1518-17	142	1524-17	188	1529-17	233	1⅞
2⅜	1518-23	179	1524-23	238	1529-23	296	2⅜
2⅞	1518-27	217	1524-27	288	1529-27	358	2⅞
3⅜	1518-33	255	1524-33	338	1529-33	420	3⅜
3⅞	1518-37	292	1524-37	388	1529-37	482	3⅞
4⅞	1518-47	368	1524-47	488	1529-47	606	4⅞
5⅞	1518-57	443	1524-57	588	1529-57	731	5⅞

A	15⅞ × 16"		15⅞ × 20"		15⅞ × 23½		15⅞ × 26"		15⅞ × 29½		15⅞ × 35½		A
	ITEM NUMBER	NET WT.	ITEM NUMBER	NET WT.	ITEM NUMBER	NET WT.	ITEM NUMBER	NET WT.	ITEM NUMBER	NET WT.	ITEM NUMBER	NET WT.	
⅞	1616-7	63	1620-7	79	1623-7	93	1626-7	103	1629-7	116	1635-7	140	⅞
1⅜	1616-13	99	1620-13	124	1623-13	146	1626-13	161	1629-13	183	1635-13	220	1⅜
1⅞	1616-17	135	1620-17	169	1623-17	199	1626-17	220	1629-17	249	1635-17	300	1⅞
2⅜	1616-23	171	1620-23	214	1623-23	252	1626-23	278	1629-23	315	1635-23	380	2⅜
2⅞	1616-27	207	1620-27	259	1623-27	304	1626-27	337	1629-27	382	1635-27	459	2⅞
3⅜	1616-33	243	1620-33	304	1623-33	357	1626-33	395	1629-33	448	1635-33	539	3⅜
3⅞	1616-37	279	1620-37	349	1623-37	410	1626-37	454	1629-37	515	1635-37	619	3⅞
4⅞	1616-47	351	1620-47	439	1623-47	516	1626-47	570	1629-47	647	1635-47	779	4⅞
5⅞	1616-57	423	1620-57	529	1623-57	621	1626-57	687	1629-57	780	1635-57	938	5⅞

WHEN ORDERING, PLEASE SPECIFY:

1. Quantity & Item Number
2. No. 1, No. 2, No. 3 or No. 7 Steel
3. Method of Shipment

Rotary Ground Mold Plates 13⅜ through 15⅞ wide

Mold Plate Size	TOLERANCES 1315, 1318, 1518	1321, 1323, 1326, 1329, 1524, 1529, 1616, 1620, 1623, 1626, 1629, 1635
Thickness (A)	+.015 to +.020	+.025 to+.030
Width (W) Nominal +.0025	+.000/+.005	
Length (L) Nominal +.0025	+.000/+.005	

Thickness (A) of plate is rotary ground. Width and length are milled.

ALL "A" THICKNESSES AVAILABLE IN:

- DME No. 1 Steel – SAE 1030 type
- DME No. 2 Steel – AISI 4130 type, pre-heat treated (271-321 Bhn; 28-34 HRC)
- DME No. 3 Steel – P-20 type, pre-heat treated (271-321 Bhn; 28-34 HRC)

PLATES WITH "A" THICKNESSES FROM ⅞ TO 2⅞ ALSO AVAILABLE IN:

- DME No. 7 Steel – Modified AISI 400 series stainless steel pre-heat treated (302-340 Bhn; 32-36 HRC)

THICKER PLATES IN DME NO. 7 STEEL ARE AVAILABLE ON SPECIAL ORDER

A	13⅜ × 15"		13⅜ × 18"		13⅜ × 20¾	
	ITEM NUMBER	NET WT.	ITEM NUMBER	NET WT.	ITEM NUMBER	NET WT.
⅞	1315-7RGM	50	1318-7RGM	60	1321-7RGM	69
1⅜	1315-13RGM	79	1318-13RGM	94	1321-13RGM	109
1⅞	1315-17RGM	107	1318-17RGM	128	1321-17RGM	148
2⅜	1315-23RGM	135	1318-23RGM	162	1321-23RGM	187
2⅞	1315-27RGM	164	1318-27RGM	197	1321-27RGM	227
3⅜	1315-33RGM	192	1318-33RGM	231	1321-33RGM	266
3⅞	1315-37RGM	221	1318-37RGM	265	1321-37RGM	305
4⅞	1315-47RGM	278	1318-47RGM	333	1321-47RGM	384
5⅞	1315-57RGM	334	1318-57RGM	401	1321-57RGM	462

A	13⅜ × 23½		13⅜ × 26"		13⅜ × 29½		A
	ITEM NUMBER	NET WT.	ITEM NUMBER	NET WT.	ITEM NUMBER	NET WT.	
⅞	1323-7RGM	78	1326-7RGM	87	1329-7RGM	98	⅞
1⅜	1323-13RGM	123	1326-13RGM	136	1329-13RGM	154	1⅜
1⅞	1323-17RGM	167	1326-17RGM	185	1329-17RGM	210	1⅞
2⅜	1323-23RGM	212	1326-23RGM	234	1329-23RGM	266	2⅜
2⅞	1323-27RGM	256	1326-27RGM	284	1329-27RGM	322	2⅞
3⅜	1323-33RGM	301	1326-33RGM	333	1329-33RGM	378	3⅜
3⅞	1323-37RGM	346	1326-37RGM	382	1329-37RGM	434	3⅞
4⅞	1323-47RGM	435	1326-47RGM	481	1329-47RGM	545	4⅞
5⅞	1323-57RGM	524	1326-57RGM	579	1329-57RGM	657	5⅞

A	14⅞ × 17⅞		14⅞ × 23¾		14⅞ × 29		A
	ITEM NUMBER	NET WT.	ITEM NUMBER	NET WT.	ITEM NUMBER	NET WT.	
⅞	1518-7RGM	66	1524-7RGM	88	1529-7RGM	109	⅞
1⅜	1518-13RGM	104	1524-13RGM	138	1529-13RGM	171	1⅜
1⅞	1518-17RGM	142	1524-17RGM	188	1529-17RGM	233	1⅞
2⅜	1518-23RGM	179	1524-23RGM	238	1529-23RGM	296	2⅜
2⅞	1518-27RGM	217	1524-27RGM	288	1529-27RGM	358	2⅞
3⅜	1518-33RGM	255	1524-33RGM	338	1529-33RGM	420	3⅜
3⅞	1518-37RGM	292	1524-37RGM	388	1529-37RGM	482	3⅞
4⅞	1518-47RGM	368	1524-47RGM	488	1529-47RGM	606	4⅞
5⅞	1518-57RGM	443	1524-57RGM	588	1529-57RGM	731	5⅞

A	15⅞ × 16"		15⅞ × 20"		15⅞ × 23½		15⅞ × 26"		15⅞ × 29½		15⅞ × 35½		A
	ITEM NUMBER	NET WT.	ITEM NUMBER	NET WT.	ITEM NUMBER	NET WT.	ITEM NUMBER	NET WT.	ITEM NUMBER	NET WT.	ITEM NUMBER	NET WT.	
⅞	1616-7RGM	63	1620-7RGM	79	1623-7RGM	93	1626-7RGM	103	1629-7RGM	116	1635-7RGM	140	⅞
1⅜	1616-13RGM	99	1620-13RGM	124	1623-13RGM	146	1626-13RGM	161	1629-13RGM	183	1635-13RGM	220	1⅜
1⅞	1616-17RGM	135	1620-17RGM	169	1623-17RGM	199	1626-17RGM	220	1629-17RGM	249	1635-17RGM	300	1⅞
2⅜	1616-23RGM	171	1620-23RGM	214	1623-23RGM	252	1626-23RGM	278	1629-23RGM	315	1635-23RGM	380	2⅜
2⅞	1616-27RGM	207	1620-27RGM	259	1623-27RGM	304	1626-27RGM	337	1629-27RGM	382	1635-27RGM	459	2⅞
3⅜	1616-33RGM	243	1620-33RGM	304	1623-33RGM	357	1626-33RGM	395	1629-33RGM	448	1635-33RGM	539	3⅜
3⅞	1616-37RGM	279	1620-37RGM	349	1623-37RGM	410	1626-37RGM	454	1629-37RGM	515	1635-37RGM	619	3⅞
4⅞	1616-47RGM	351	1620-47RGM	439	1623-47RGM	516	1626-47RGM	570	1629-47RGM	647	1635-47RGM	779	4⅞
5⅞	1616-57RGM	423	1620-57RGM	529	1623-57RGM	621	1626-57RGM	687	1629-57RGM	780	1635-57RGM	938	5⅞

WHEN ORDERING, PLEASE SPECIFY:

1. Quantity & Item Number
2. No. 1, No. 2, No. 3 or No. 7 Steel
3. Method of Shipment

Finish Ground Mold Plates 16½ through 23¾ wide

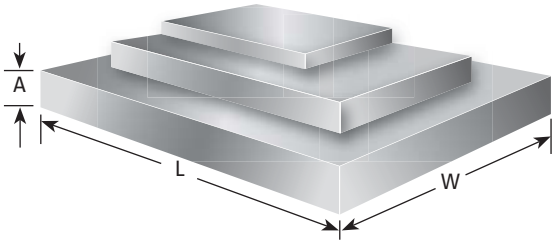

Thickness (A) of plate is finish ground ±.001. Width and length are finished square and parallel.

ALL "A" THICKNESSES AVAILABLE IN:

- DME No. 1 Steel – SAE 1030 type
- DME No. 2 Steel – AISI 4130 type, pre-heat treated (271-321 Bhn; 28-34 HRC)
- DME No. 3 Steel – P-20 type, pre-heat treated (271-321 Bhn; 28-34 HRC)

PLATES WITH "A" THICKNESSES FROM ⅞ TO 2⅞ ALSO AVAILABLE IN:

- DME No. 7 Steel – Modified AISI 400 series stainless steel pre-heat treated (302-340 Bhn; 32-36 HRC)

THICKER PLATES IN DME NO. 7 STEEL ARE AVAILABLE ON SPECIAL ORDER

A	16½ × 23¾		16½ × 29½		A
	ITEM NUMBER	NET WT.	ITEM NUMBER	NET WT.	
⅞	1724-7	98	1729-7	121	⅞
1⅜	1724-13	153	1729-13	190	1⅜
1⅞	1724-17	209	1729-17	259	1⅞
2⅜	1724-23	264	1729-23	328	2⅜
2⅞	1724-27	320	1729-27	397	2⅞
3⅜	1724-33	375	1729-33	466	3⅜
3⅞	1724-37	431	1729-37	535	3⅞
4⅞	1724-47	542	1729-47	673	4⅞
5⅞	1724-57	653	1729-57	811	5⅞

A	17⅞ × 18"		17⅞ × 20"		17⅞ × 23½		17⅞ × 26"		17⅞ × 29½		17⅞ × 35½		A
	ITEM NUMBER	NET WT.	ITEM NUMBER	NET WT.	ITEM NUMBER	NET WT.	ITEM NUMBER	NET WT.	ITEM NUMBER	NET WT.	ITEM NUMBER	NET WT.	
⅞	1818-7	80	1820-7	89	1823-7	105	1826-7	116	1829-7	131	1835-7	158	⅞
1⅜	1818-13	126	1820-13	140	1823-13	164	1826-13	182	1829-13	206	1835-13	248	1⅜
1⅞	1818-17	171	1820-17	190	1823-17	224	1826-17	247	1829-17	281	1835-17	338	1⅞
2⅜	1818-23	217	1820-23	241	1823-23	283	1826-23	313	1829-23	355	1835-23	427	2⅜
2⅞	1818-27	263	1820-27	292	1823-27	343	1826-27	379	1829-27	430	1835-27	517	2⅞
3⅜	1818-33	308	1820-33	342	1823-33	402	1826-33	445	1829-33	505	1835-33	607	3⅜
3⅞	1818-37	354	1820-37	393	1823-37	462	1826-37	511	1829-37	579	1835-37	697	3⅞
4⅞	1818-47	445	1820-47	494	1823-47	581	1826-47	642	1829-47	729	1835-47	877	4⅞
5⅞	1818-57	536	1820-57	596	1823-57	700	1826-57	774	1829-57	878	1835-57	1057	5⅞

A	19½ × 23¾		19½ × 29½		19½ × 35½		A
	ITEM NUMBER	NET WT.	ITEM NUMBER	NET WT.	ITEM NUMBER	NET WT.	
⅞	1924-7	115	1929-7	143	1935-7	172	⅞
1⅜	1924-13	181	1929-13	224	1935-13	270	1⅜
1⅞	1924-17	246	1929-17	306	1935-17	368	1⅞
2⅜	1924-23	312	1929-23	387	1935-23	466	2⅜
2⅞	1924-27	378	1929-27	469	1935-27	564	2⅞
3⅜	1924-33	443	1929-33	550	1935-33	662	3⅜
3⅞	1924-37	509	1929-37	632	1935-37	760	3⅞
4⅞	1924-47	640	1929-47	795	1935-47	956	4⅞
5⅞	1924-57	771	1929-57	958	1935-57	1153	5⅞

A	23¾ × 23¾		23¾ × 29½		23¾ × 35½		A
	ITEM NUMBER	NET WT.	ITEM NUMBER	NET WT.	ITEM NUMBER	NET WT.	
⅞	2424-7	140	2429-7	174	2435-7	209	⅞
1⅜	2424-13	220	2429-13	273	2435-13	329	1⅜
1⅞	2424-17	300	2429-17	373	2435-17	448	1⅞
2⅜	2424-23	380	2429-23	472	2435-23	568	2⅜
2⅞	2424-27	460	2429-27	571	2435-27	687	2⅞
3⅜	2424-33	540	2429-33	670	2435-33	807	3⅜
3⅞	2424-37	620	2429-37	770	2435-37	926	3⅞
4⅞	2424-47	779	2429-47	968	2435-47	1165	4⅞
5⅞	2424-57	939	2429-57	1167	2435-57	1404	5⅞

WHEN ORDERING, PLEASE SPECIFY:

1. Quantity & Item Number
2. No. 1, No. 2, No. 3 or No. 7 Steel
3. Method of Shipment

Rotary Ground Mold Plates 16½ through 23¾ wide

Mold Plate Size	TOLERANCES 1315, 1318, 1518	1321, 1323, 1326, 1329, 1524, 1529, 1616, 1620, 1623, 1626, 1629, 1635
Thickness (A)	+.015 to +.020	+.025 to+.030
Width (W) Nominal +.0025	+.000/+.005	
Length (L) Nominal +.0025	+.000/+.005	

Thickness (A) of plate is rotary ground. Width and length are milled.

ALL "A" THICKNESSES AVAILABLE IN:

- DME No. 1 Steel – SAE 1030 type
- DME No. 2 Steel – AISI 4130 type, pre-heat treated (271-321 Bhn; 28-34 HRC)
- DME No. 3 Steel – P-20 type, pre-heat treated (271-321 Bhn; 28-34 HRC)

PLATES WITH "A" THICKNESSES FROM ⅞ TO 2⅞ ALSO AVAILABLE IN:

- DME No. 7 Steel – Modified AISI 400 series stainless steel
  pre-heat treated (302-340 Bhn; 32-36 HRC)

THICKER PLATES IN DME NO. 7 STEEL ARE AVAILABLE ON SPECIAL ORDER

A	16½ × 23¾		16½ × 29½		A
	ITEM NUMBER	NET WT.	ITEM NUMBER	NET WT.	
⅞	1724-7RGM	98	1729-7RGM	121	⅞
1⅜	1724-13RGM	153	1729-13RGM	190	1⅜
1⅞	1724-17RGM	209	1729-17RGM	259	1⅞
2⅜	1724-23RGM	264	1729-23RGM	328	2⅜
2⅞	1724-27RGM	320	1729-27RGM	397	2⅞
3⅜	1724-33RGM	375	1729-33RGM	466	3⅜
3⅞	1724-37RGM	431	1729-37RGM	535	3⅞
4⅞	1724-47RGM	542	1729-47RGM	673	4⅞
5⅞	1724-57RGM	653	1729-57RGM	811	5⅞

A	17⅞ × 18"		17⅞ × 20"		17⅞ × 23½		17⅞ × 26"		17⅞ × 29½		17⅞ × 35½		A
	ITEM NUMBER	NET WT.	ITEM NUMBER	NET WT.	ITEM NUMBER	NET WT.	ITEM NUMBER	NET WT.	ITEM NUMBER	NET WT.	ITEM NUMBER	NET WT.	
⅞	1818-7RGM	80	1820-7RGM	89	1823-7RGM	105	1826-7RGM	116	1829-7RGM	131	1835-7RGM	158	⅞
1⅜	1818-13RGM	126	1820-13RGM	140	1823-13RGM	164	1826-13RGM	182	1829-13RGM	206	1835-13RGM	248	1⅜
1⅞	1818-17RGM	171	1820-17RGM	190	1823-17RGM	224	1826-17RGM	247	1829-17RGM	281	1835-17RGM	338	1⅞
2⅜	1818-23RGM	217	1820-23RGM	241	1823-23RGM	283	1826-23RGM	313	1829-23RGM	355	1835-23RGM	427	2⅜
2⅞	1818-27RGM	263	1820-27RGM	292	1823-27RGM	343	1826-27RGM	379	1829-27RGM	430	1835-27RGM	517	2⅞
3⅜	1818-33RGM	308	1820-33RGM	342	1823-33RGM	402	1826-33RGM	445	1829-33RGM	505	1835-33RGM	607	3⅜
3⅞	1818-37RGM	354	1820-37RGM	393	1823-37RGM	462	1826-37RGM	511	1829-37RGM	579	1835-37RGM	697	3⅞
4⅞	1818-47RGM	445	1820-47RGM	494	1823-47RGM	581	1826-47RGM	642	1829-47RGM	729	1835-47RGM	877	4⅞
5⅞	1818-57RGM	536	1820-57RGM	596	1823-57RGM	700	1826-57RGM	774	1829-57RGM	878	1835-57RGM	1057	5⅞

A	19½ × 23¾		19½ × 29½		19½ × 35½		A
	ITEM NUMBER	NET WT.	ITEM NUMBER	NET WT.	ITEM NUMBER	NET WT.	
⅞	1924-7RGM	115	1929-7RGM	143	1935-7RGM	172	⅞
1⅜	1924-13RGM	181	1929-13RGM	224	1935-13RGM	270	1⅜
1⅞	1924-17RGM	246	1929-17RGM	306	1935-17RGM	368	1⅞
2⅜	1924-23RGM	312	1929-23RGM	387	1935-23RGM	466	2⅜
2⅞	1924-27RGM	378	1929-27RGM	469	1935-27RGM	564	2⅞
3⅜	1924-33RGM	443	1929-33RGM	550	1935-33RGM	662	3⅜
3⅞	1924-37RGM	509	1929-37RGM	632	1935-37RGM	760	3⅞
4⅞	1924-47RGM	640	1929-47RGM	795	1935-47RGM	956	4⅞
5⅞	1924-57RGM	771	1929-57RGM	958	1935-57RGM	1153	5⅞

A	23¾ × 23¾		23¾ × 29½		23¾ × 35½		A
	ITEM NUMBER	NET WT.	ITEM NUMBER	NET WT.	ITEM NUMBER	NET WT.	
⅞	2424-7RGM	140	2429-7RGM	174	2435-7RGM	209	⅞
1⅜	2424-13RGM	220	2429-13RGM	273	2435-13RGM	329	1⅜
1⅞	2424-17RGM	300	2429-17RGM	373	2435-17RGM	448	1⅞
2⅜	2424-23RGM	380	2429-23RGM	472	2435-23RGM	568	2⅜
2⅞	2424-27RGM	460	2429-27RGM	571	2435-27RGM	687	2⅞
3⅜	2424-33RGM	540	2429-33RGM	670	2435-33RGM	807	3⅜
3⅞	2424-37RGM	620	2429-37RGM	770	2435-37RGM	926	3⅞
4⅞	2424-47RGM	779	2429-47RGM	968	2435-47RGM	1165	4⅞
5⅞	2424-57RGM	939	2429-57RGM	1167	2435-57RGM	1404	5⅞

WHEN ORDERING, PLEASE SPECIFY:

1. Quantity & Item Number
2. No. 1, No. 2, No. 3 or No. 7 Steel
3. Method of Shipment

Ejector Plates
DME No. 1 Steel

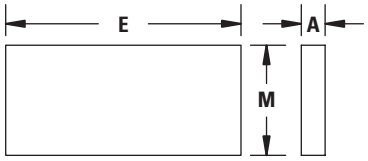

Thickness of plate is finish ground to a tolerance of plus or minus .001".

WIDTH OF MOLD BASE	A THICK	M WIDTH	E LENGTH	ITEM NUMBER	NET WT.
6	1	4	14	6-614C	16
7	½	5	6	6-67R	5
7⅞	1	5¼	7⅞	6-88	8
			11⅞	6-812	12
			16	6-816	15
			20	6-820	19
8 15/16	½	6*	11⅞	6-912V	11
9	1	6	11⅞	6-912M	21
	1	6	16	6-916M	28
	1	6	23½	6-923M	40
9⅞	½	6	8	6-108V	7
		6⅞	7⅞	6-108R	8
	1	6⅞	8	6-108	16
			11⅞	6-1012	24
			16	6-1016	32
			20	6-1020	39
			23½	6-1023	46
			29½	6-1029	58
10⅞	1	7⅝	12	6-1112	26
			14	6-1114	30
			18	6-1118	38
			23½	6-1123	50
			29½	6-1129	62
11⅞	1⅛	8⅝	12	6-1212	33
			15	6-1215	41
			20	6-1220	54
			23½	6-1223	63
			29½	6-1229	79

WIDTH OF MOLD BASE	A THICK	M WIDTH	E LENGTH	ITEM NUMBER	NET WT.
13⅜	1⅛	9½	15	6-1315	46
			18	6-1318	55
			18½	6-1319	57
			20¾	6-1321	63
			23½	6-1323	72
			26	6-1326	79
			29½	6-1329	90
			35½	6-1335	108
14⅞	1⅛	11	17⅞	6-1518	63
			23¾	6-1524	84
			29½	6-1529	104
			35½	6-1535	125
15⅞	1⅛	12	16	6-1616	62
			20	6-1620	77
			23½	6-1623	90
			26	6-1626	100
			29½	6-1629	113
			35½	6-1635	136
16½	1⅛	12⅝	23¾	6-1724	96
			29½	6-1729	119
			35½	6-1735	143
17⅞	1⅛	14	18	6-1818	81
			20	6-1820	90
			23½	6-1823	105
			26	6-1826	117
			29½	6-1829	132
			35½	6-1835	159
19½	1⅛	15⅝	23¾	6-1924	119
			29½	6-1929	147
			35½	6-1935	177
23¾	1⅛	19⅞	23¾	6-2424	151
			29½	6-2429	187
			35½	6-2435	225

WHEN ORDERING, PLEASE SPECIFY:

1. Quantity
2. Item Number
3. Method of Shipment

Ejector Retainer Plates
DME No. 1 Steel

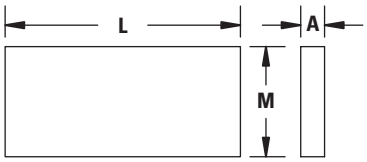

Thickness of plate is rotary ground to a tolerance of plus .015", minus .000".

A THICK	M WIDTH	L LENGTH	USED WITH MOLD BASES LISTED BELOW	ITEM NUMBER	NET WT.
3/8	5	6	6 × 7R	7-67R	4
1/2	4	10 7/8	6 × 10 7/8	7-611C	7
	5 1/4	7 7/8	7 7/8 × 7 7/8	7-88	6
	5 1/4	11 7/8	7 7/8 × 11 7/8	7-812	9
	6	8	9 7/8 × 8V	7-108V	7
	6	11 7/8	8 15/16 × 11 7/8V or 9 × 11 7/8M	7-912VM	11
	6 7/8	7 7/8	108R	7-108R	8
		8	9 7/8 × 8	7-108	8
		11 7/8	9 7/8 × 11 7/8	7-1012	12
		16	9 7/8 × 16	7-1016	16
		20	9 7/8 × 20	7-1020	20
	7 3/8	12	10 7/8 × 12	7-1112	13
		14	10 7/8 × 14	7-1114	15
		18	10 7/8 × 18	7-1118	19
		23 1/2	10 7/8 × 23 1/2	7-1123	25
	8 3/8	12	11 7/8 × 12	7-1212	15
		15	11 7/8 × 15	7-1215	18
		20	11 7/8 × 20	7-1220	24
		23 1/2	11 7/8 × 23 1/2	7-1223	28
5/8	9 1/2	15	13 3/8 × 15	7-1315	26
		18	13 3/8 × 18	7-1318	31
		20 3/4	13 3/8 × 20 3/4	7-1321	35
		23 1/2	13 3/8 × 23 1/2	7-1323	40
		26	13 3/8 × 26	7-1326	44
		29 1/2	13 3/8 × 29 1/2	7-1329	50
	11	17 7/8	14 7/8 × 17 7/8	7-1518	35
		23 3/4	14 7/8 × 23 3/4	7-1524	47
		29 1/2	14 7/8 × 29 1/2	7-1529	58

A THICK	M WIDTH	L LENGTH	USED WITH MOLD BASES LISTED BELOW	ITEM NUMBER	NET WT.
5/8 (cont.)	12	16	15 7/8 × 16	7-1616	34
		20	15 7/8 × 20	7-1620	43
		23 1/2	15 7/8 × 23 1/2	7-1623	50
		26	15 7/8 × 26	7-1626	58
		29 1/2	15 7/8 × 29 1/2	7-1629	63
		35 1/2	15 7/8 × 35 1/2	7-1635	76
	12 5/8	23 3/4	16 1/2 × 23 3/4	7-1724	54
		29 1/2	16 1/2 × 29 1/2	7-1729	66
	14	18	17 7/8 × 18	7-1818	45
		20	17 7/8 × 20	7-1820	50
		23 1/2	17 7/8 × 23 1/2	7-1823	59
		26	17 7/8 × 26	7-1826	65
		29 1/2	17 7/8 × 29 1/2	7-1829	74
		35 1/2	17 7/8 × 35 1/2	7-1835	89
	15 5/8	23 3/4	19 1/2 × 23 3/4	7-1924	66
		29 1/2	19 1/2 × 29 1/2	7-1929	82
		35 1/2	19 1/2 × 35 1/2	7-1935	99
	19 7/8	23 3/4	23 3/4 × 23 3/4	7-2424	84
		29 1/2	23 3/4 × 29 1/2	7-2429	104
		35 1/2	23 3/4 × 35 1/2	7-2435	125

WHEN ORDERING, PLEASE SPECIFY:

1. Quantity
2. Item Number
3. Method of Shipment

Spacer Blocks
Plain and Slotted – DME No. 1 Steel

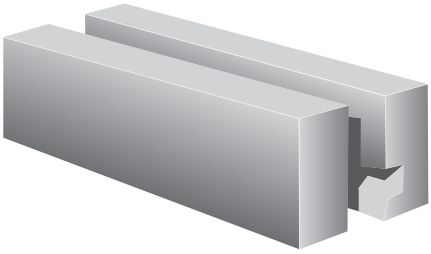

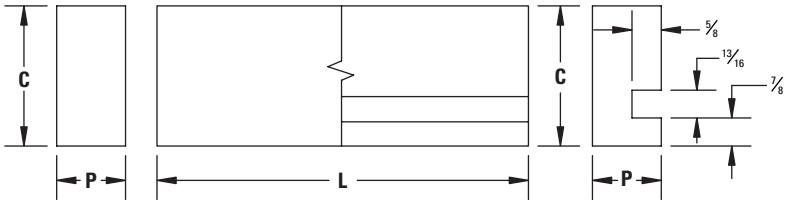

Machined all over. Riser height ("C" dimension) is finish ground to a tolerance of plus or minus .001". Width ("P" dimension) is rough ground to a tolerance of – .000, + .015. Finish ground width available on special order.

P	L	C	PLAIN	SLOTTED	
			ITEM NUMBER	NET WT.	ITEM NUMBER
15/16	11⅞	2½	25-912V	8	—
1¼	7⅞	2½	25-408	7	25-508
		3	30-408	9	30-508
1 7/16	8	2½	25-608	9	25-708
		3	30-608	10	30-708
		4	40-608	14	40-708
		5	50-608	17	50-708
	11⅞	2½	25-612	13	25-712
		3	30-612	15	30-712
		3½	—	17	35-712M
		4	40-612	20	40-712
		5	50-612	25	50-712
	16	2½	25-616	17	25-716
		3	30-616	20	30-716
		4	40-616	27	40-716
		5	50-616	33	50-716
	20	2½	25-620	21	25-720
		3	30-620	25	30-720
		4	40-620	33	40-720
		5	50-620	41	50-720
1 11/16	12	3	30-112	18	30-212
		4	40-112	23	40-212
		5	50-112	29	50-212
		6	60-112	35	60-212
	15	3	30-115	22	30-215
		4	40-115	29	40-215
		5	50-115	36	50-215
		6	60-115	44	60-215
	18	3	30-118	26	30-218
		4	40-118	35	40-218
		5	50-118	44	50-218
		6	60-118	52	60-218
	20	3	30-120	29	30-220
		4	40-120	39	40-220
		5	50-120	48	50-220
		6	60-120	58	60-220
	23½	3	30-123	34	30-223
		4	40-123	45	40-223
		5	50-123	57	50-223
		6	60-123	68	60-223

P	L	C	PLAIN	SLOTTED	
			ITEM NUMBER	NET WT.	ITEM NUMBER
1 11/16 (cont.)	26	3	30-126	38	30-226
		4	40-126	50	40-226
		5	50-126	63	50-226
		6	60-126	75	60-226
	29½	3	30-129	43	30-229
		4	40-129	57	40-229
		5	50-129	71	50-229
		6	60-129	85	60-229
	35½	3	30-135	51	30-235
		4	40-135	68	40-235
		5	50-135	85	50-235
		6	60-135	102	60-235
1⅞	8	2½	25-108V	11	—
	18	3	30-418	29	30-518
		4	40-418	39	40-518
		5	50-418	48	50-518
		6	60-418	58	60-518
	20	3	30-420	32	30-520
		4	40-420	43	40-520
		5	50-420	54	50-520
		6	60-420	64	60-520
	23¾	3	30-424	38	30-524
		4	40-424	51	40-524
		5	50-424	64	50-524
		6	60-424	76	60-524
	26	3	30-426	42	30-526
		4	40-426	56	40-526
		5	50-426	70	50-526
		6	60-426	83	60-526
	29½	3	30-429	48	30-529
		4	40-429	63	40-529
		5	50-429	79	50-529
		6	60-429	95	60-529
	35½	3	30-435	57	30-535
		4	40-435	76	40-535
		5	50-435	95	50-535
		6	60-435	114	60-535

WHEN ORDERING, PLEASE SPECIFY:

1. Quantity
2. Item Number
3. Method of Shipment

A-Slotted Rails – DME No. 1 Steel and No. 7 Steel

A-Slotted Rails

AVAILABLE IN:

- DME No. 1 Steel – SAE 1030 type
- DME No. 7 Steel – Modified AISI 400 series stainless steel

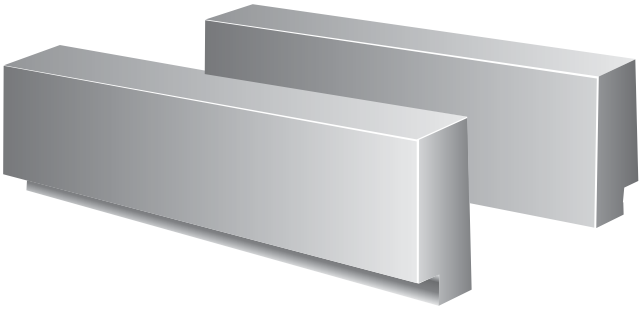

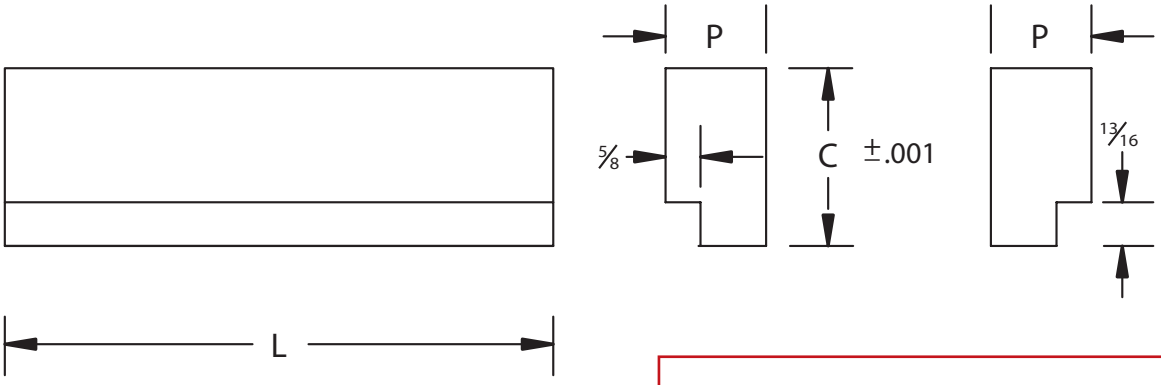

STEEL DESCRIPTIONS

DME NO. 1 STEEL

No. 1 Steel is a medium carbon (SAE 1030) or equivalent, silicon-killed forging quality steel with approximately 25% greater tensile strength than typical low-carbon warehouse steels. It machines easily, but is not "sticky," permitting a faster and smoother cut.

DME NO. 7 STEEL

No. 7 Steel is a modified AISI 400 or equivalent series stainless steel for holder block applications. It is supplied pre-heat treated to 32-36 HRC (302-340 Bhn). This stainless steel offers corrosion-resistance and exceptional machinability but cannot be further hardened (see DME No. 6). For humid environments, corrosive plastics, "clean room" or "100% stainless" applications, it is an ideal choice for all structural (non-cavity/core) mold plates.

For A-Slotted Rails in other steel types please contact DME Customer Service.

HOW TO ORDER: Specify Item Number Prefix (SA), Steel Type (S), Rail Width (P), Rail Length (L), Rail Height (C) and Item Number Suffix (0030).

Item Key:

SA	(S)	(P)	(L)	(C)	0030

SA : Item Number Prefix

(S) : Enter 1 for #1 steel or 7 for #7 steel

(P) : Rail Width
- 12 – 1.25 [1 1/4] (mold base series 88 and 812)
- 14 – 1.4375 [1 7/16] (mold base series 10xx)
- 16 – 1.6875 [1 11/16] (mold base series 11xx and 12xx)
- 17 – 1.875 [1 7/8] (mold base series 13xx and larger)

(L) : Rail Length (same as mold base length – examples 7 7/8 = 8, 19 1/2 = 19)

(C) : Rail Height (C dimension – do not include decimals – examples 2.5 = 25, 3.5 = 35)

0030 : Item Number Suffix

Example:

SA1148250030

Example:

SA7171930030

Do not include dashes or decimals in your item number.

Spacer Blocks
Angle Spacers – DME No. 1 Steel

Riser height ("C" dimension) is finish ground to a tolerance of plus or minus .001".

These Angle Spacers are useful for the buildup of Compression Mold Assemblies.

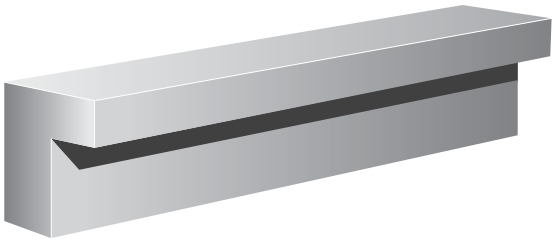

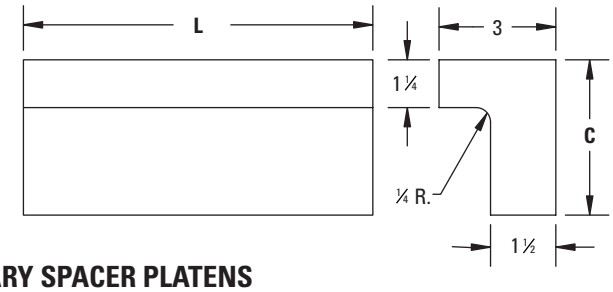

L	C	ITEM NUMBER	NET WT.
12	3	30-312	22
	4	40-312	27
	5	50-312	32
	6	60-312	37
15	3	30-315	28
	4	40-315	34
	5	50-315	40
	6	60-315	47
18	3	30-318	33
	4	40-318	41
	5	50-318	48
	6	60-318	56
20	3	30-320	37
	4	40-320	45
	5	50-320	54
	6	60-320	62
23¾	3	30-324	43
	4	40-324	53
	5	50-324	64
	6	60-324	74
26	3	30-326	47
	4	40-326	59
	5	50-326	70
	6	60-326	81
29½	3	30-329	54
	4	40-329	66
	5	50-329	79
	6	60-329	91
35½	3	30-335	65
	4	40-335	80
	5	50-335	95
	6	60-335	110

WHEN ORDERING, PLEASE SPECIFY:

1. Quantity
2. Item Number
3. Method of Shipment

AUXILIARY SPACER PLATENS

When the use of Auxiliary Spacer Platens becomes necessary to reduce the minimum daylight of the press, the importance of proper rigidity cannot be over-emphasized. The drawing shown here illustrates a typical installation that meets good rigidity requirements. The distance between the parallel spacer blocks is dependent on the location of the knock-out rods on the press.

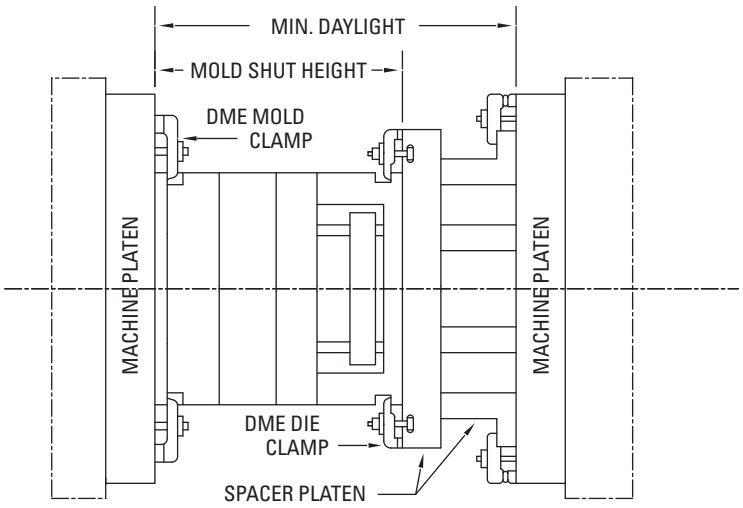

The drawing shown below illustrates a recommended design that is available from DME on special order. The use of standard DME mold plates and spacer blocks can help keep the cost at a minimum. A detailed drawing should accompany your request for a quotation.

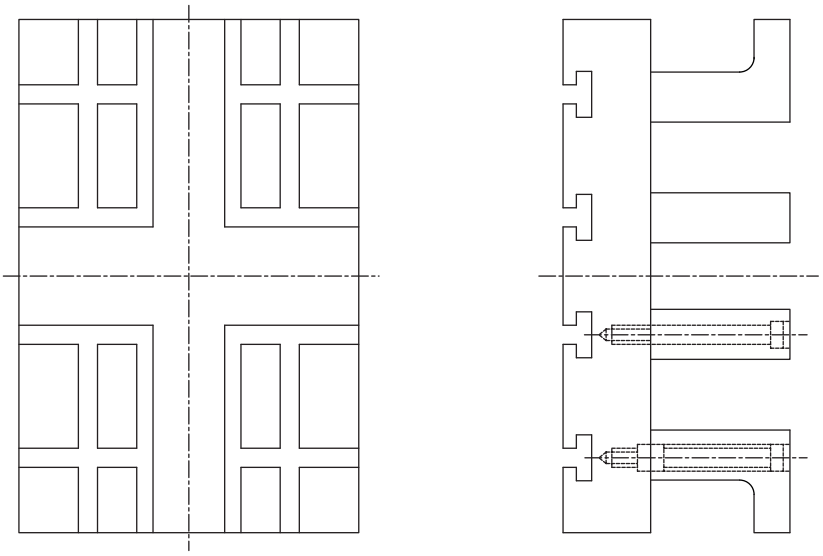

Ejector Housings
7⅞ to 13⅜ Wide – DME No. 1 Steel

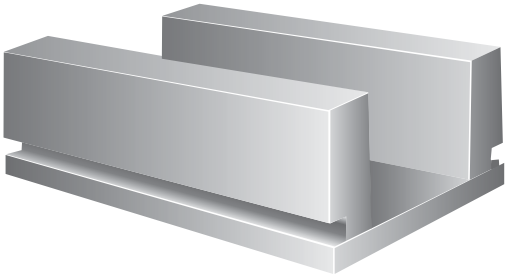

One piece construction provides more rigid support for plastics molds or die cast dies.

Riser height ("C" dimension) is finish ground to a tolerance of plus or minus .001". Outer surfaces are finished square and parallel.

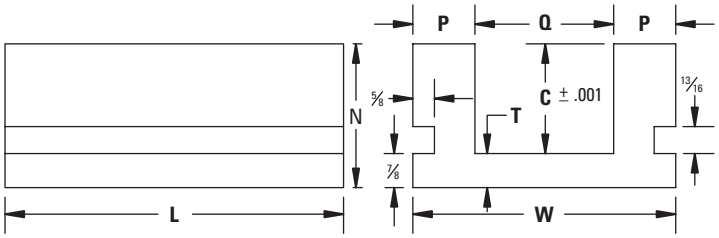

NOTE: Thickness of the base plate (T) is ⅞" for all sizes from 7⅞" to 19½" wide. The base plate for the 23¾" wide series is 1⅜" thick.

* ½ on 88A and 812A Series Mold Bases

DETAIL DIMENSIONS

W	7⅞	9⅞	10⅞	11⅞	13⅜	14⅞	15⅞	16½	17⅞	19½	23¾
P	1¼	1 7/16	1 11/16	1 11/16	1⅞	1⅞	1⅞	1⅞	1⅞	1⅞	1⅞
Q	5⅜	7"	7½	8½	9⅝	11⅛	12⅛	12¾	14⅛	15¾	20"

C	Height of Riser	2½	3"	3½	4"	4½
N	7⅞ to 19½ Wide Housings	3⅜	3⅞	4⅜	4⅞	5⅜
	23¾ Wide Housings	3⅞	4⅜	4⅞	5⅜	5⅞

W	L	C	ITEM NUMBER	NET WT.
7⅞	7⅞	2½	25-88	28
		3	30-88	30
		3½	35-88	33
		4	40-88	36
		4½	45-88	39
	11⅞	2½	25-812	42
		3	30-812	45
		3½	35-812	50
		4	40-812	54
		4½	45-812	59
9⅞	7⅞	2½	25-108R	34
	8	2½	25-108	34
		3	30-108	37
		3½	35-108	41
		4	40-108	44
		4½	45-108	47
	11⅞	2½	25-1012	50
		3	30-1012	55
		3½	35-1012	60
		4	40-1012	65
		4½	45-1012	70
	16	2½	25-1016	68
		3	30-1016	74
		3½	35-1016	81
		4	40-1016	87
		4½	45-1016	94
	20	2½	25-1020	84
		3	30-1020	93
		3½	35-1020	101
		4	40-1020	109
		4½	45-1020	117

W	L	C	ITEM NUMBER	NET WT.
10⅞	12	2½	25-1112	58
		3	30-1112	64
		3½	35-1112	70
		4	40-1112	75
		4½	45-1112	81
	14	2½	25-1114	68
		3	30-1114	74
		3½	35-1114	81
		4	40-1114	88
		4½	45-1114	94
	18	2½	25-1118	87
		3	30-1118	95
		3½	35-1118	104
		4	40-1118	113
		4½	45-1118	121
	23½	2½	25-1123	113
		3	30-1123	124
		3½	35-1123	136
		4	40-1123	147
		4½	45-1123	158
11⅞	12	3	30-1212	67
		3½	35-1212	73
		4	40-1212	78
		4½	45-1212	84
	15	3	30-1215	83
		3½	35-1215	91
		4	40-1215	98
		4½	45-1215	105

W	L	C	ITEM NUMBER	NET WT.
11⅞ (cont.)	20	3	30-1220	111
		3½	35-1220	121
		4	40-1220	130
		4½	45-1220	140
	23½	3	30-1223	130
		3½	35-1223	142
		4	40-1223	153
		4½	45-1223	164
13⅜	15	3	30-1315	94
		3½	35-1315	102
		4	40-1315	110
		4½	45-1315	118
	18	3	30-1318	112
		3½	35-1318	122
		4	40-1318	131
		4½	45-1318	141
	20¾	3	30-1321	129
		3½	35-1321	140
		4	40-1321	152
		4½	45-1321	163
	23½	3	30-1323	147
		3½	35-1323	159
		4	40-1323	172
		4½	45-1323	184
	26	3	30-1326	162
		3½	35-1326	176
		4	40-1326	190
		4½	45-1326	204

WHEN ORDERING, PLEASE SPECIFY:

1. Quantity
2. Item Number
3. Method of Shipment

Ejector Housings
13⅜ to 23¾ wide – DME No. 1 Steel

One piece construction provides more rigid support for plastics molds or die-cast dies.

Riser height ("C" dimension) is finish ground to a tolerance of plus or minus .001". Outer surfaces are finished square and parallel.

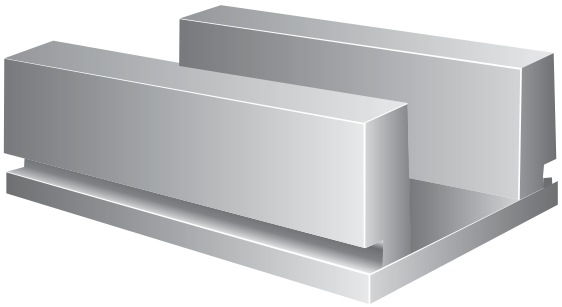

W	L	C	ITEM NUMBER	NET WT.
13⅜ (cont.)	29½	3	30-1329	184
		3½	35-1329	200
		4	40-1329	215
		4½	45-1329	231
14⅞	17⅞	3	30-1518	118
		3½	35-1518	128
		4	40-1518	137
		4½	45-1518	147
	23¾	3	30-1524	157
		3½	35-1524	170
		4	40-1524	182
		4½	45-1524	195
	29½	3	30-1529	195
		3½	35-1529	210
		4	40-1529	226
		4½	45-1529	242
15⅞	16	3	30-1616	110
		3½	35-1616	118
		4	40-1616	127
		4½	45-1616	135
	20	3	30-1620	137
		3½	35-1620	148
		4	40-1620	158
		4½	45-1620	169
	23½	3	30-1623	161
		3½	35-1623	174
		4	40-1623	186
		4½	45-1623	199
	26	3	30-1626	178
		3½	35-1626	192
		4	40-1626	206
		4½	45-1626	220

W	L	C	ITEM NUMBER	NET WT.
15⅞ (cont.)	29½	3	30-1629	202
		3½	35-1629	218
		4	40-1629	233
		4½	45-1629	249
	35½	3	30-1635	243
		3½	35-1635	262
		4	40-1635	281
		4½	45-1635	300
16½	23¾	3	30-1724	166
		3½	35-1724	179
		4	40-1724	192
		4½	45-1724	204
	29½	3	30-1729	207
		3½	35-1729	222
		4	40-1729	238
		4½	45-1729	254
17⅞	18	3	30-1818	132
		3½	35-1818	142
		4	40-1818	152
		4½	45-1818	161
	20	3	30-1820	147
		3½	35-1820	158
		4	40-1820	168
		4½	45-1820	179
	23½	3	30-1823	173
		3½	35-1823	185
		4	40-1823	198
		4½	45-1823	210
	26	3	30-1826	191
		3½	35-1826	205
		4	40-1826	219
		4½	45-1826	233

W	L	C	ITEM NUMBER	NET WT.
17⅞ (cont.)	29½	3	30-1829	217
		3½	35-1829	232
		4	40-1829	248
		4½	45-1829	264
	35½	3	30-1835	261
		3½	35-1835	280
		4	40-1835	298
		4½	45-1835	317
19½	23¾	3	30-1924	184
		3½	35-1924	197
		4	40-1924	209
		4½	45-1924	222
	29½	3	30-1929	229
		3½	35-1929	244
		4	40-1929	260
		4½	45-1929	276
	35½	3	30-1935	275
		3½	35-1935	294
		4	40-1935	313
		4½	45-1935	332
23¾	23¾	3	30-2424	289
		3½	35-2424	302
		4	40-2424	314
		4½	45-2424	327
	29½	3	30-2429	359
		3½	35-2429	375
		4	40-2429	390
		4½	45-2429	406
	35½	3	30-2435	432
		3½	35-2435	451
		4	40-2435	470
		4½	45-2435	488

WHEN ORDERING, PLEASE SPECIFY:

1. Quantity
2. Item Number
3. Method of Shipment

Mold Plates, Ejector and Ejector Retainer Plates and Ejector Housings

Mold Plates

For 34 & 45R, 56 & 58N, 56 & 58U Mold Assemblies

(For cavity, support and top clamping plates).

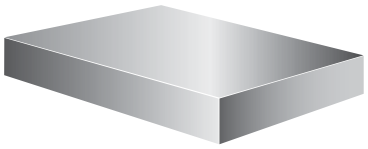

TYPE OF SEAL	A (THICKNESS)	3½ × 3¾		4" × 5"		5" × 6"		5" × 8"	
		ITEM NUMBER	NET WT.	ITEM NUMBER	NET WT.	ITEM NUMBER	NET WT.	ITEM NUMBER	NET WT.
No. 2	⅜	34-3	1.4	—	—	—	—	—	—
	½	34-4	1.9	—	—	—	—	—	—
	⅝	—	—	45-5	3.5	—	—	—	—
No. 3	⅞	34-7 *	3.3	45-7 *	4.9	56-7 *	7.5	58-7 *	10.0
No. 2	1	—	—	—	—	56-8	8.5	58-8	11.4
No. 3	1⅛	34-11	4.2	—	—	—	—	—	—
	1⅜	34-13 *	5.2	45-13 *	7.8	56-13 *	11.7	58-13 *	15.6
	1⅞	—	—	45-17 *	10.6	56-17 *	16.0	58-17 *	21.3

Thickness of plate is finish ground to a tolerance of plus or minus .001". Width and length are finished square and parallel.

NOTE: Plates marked with a * are also available as cavity insert blocks with additional stock allowance. Please specify **mold plate** when ordering these sizes from this page.

Ejector and Ejector Retainer Plates

For 34 & 45R, 56 & 58N, 56 & 58U Mold Assemblies

A	2½ × 3½		3⅛ × 4"		3⅛ × 8"	
	ITEM NUMBER	NET WT.	ITEM NUMBER	NET WT.	ITEM NUMBER	NET WT.
3/16	6-34	.5	—	—	—	—
⅜	—	—	7-45	1.3	7-58	2.7
½	—	—	6-45	1.8	6-58	3.6

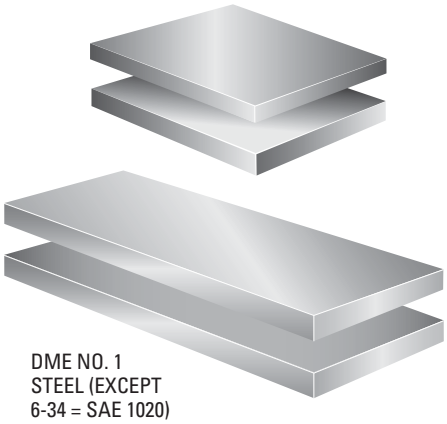

DME NO. 1 STEEL (EXCEPT 6-34 = SAE 1020)

EJECTOR PLATES

Thickness of plate is finish ground to a tolerance of plus or minus .001".

EJECTOR RETAINER PLATES

Thickness of plate is rotary ground to a tolerance of plus .015", minus .000".

Ejector Housings

For 34 & 45R, 56 & 58N, 56 & 58U Mold Assemblies

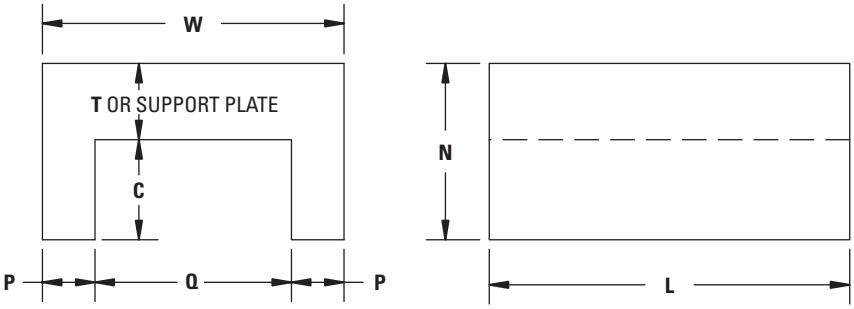

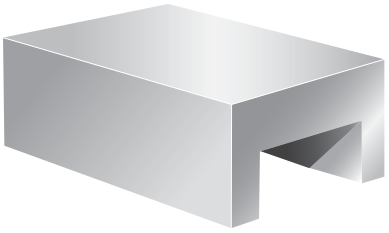

DME NO. 1 STEEL

W	L	C	T OR SUPPORT PLATE	N	P	Q	ITEM NUMBER	No. 1 STEEL	No. 3 STEEL	NET WT.
3¾	3½	1.080	½	1.580	9/16	2⅝	10-34	•	—	3.1
5	4	2	½	2½	⅞	3¼	20-45	•	—	6.8
	6	1⅝	1¼	2⅞	⅞	3¼	15-56	•	•	15.5
	8	1⅝	1¼	2⅞	⅞	3¼	15-58	•	•	20.7
7	6	2	½	2½	15/16	5⅛	20-67	•	—	12.4

Ejector Housings for small-size Mold Bases are one-piece construction which provides more rigid support with fewer parts. All surfaces are machined square and parallel. The riser height is finish ground parallel to the surface of the base plate.

Large Custom Mold Plates

Precision Machined Custom Mold Plates with Lengths to 90"

Manufacturing Capabilities

- Plate lengths up to 90" (2300mm)
- Plate widths up to 60" (1500mm)
- Plate thicknesses up to 39" (1000mm)
- Plate weights up to 6,600 pounds (3000kg) after machining
  – 8600 lbs. (3900kg) before machining
- Proven medical/packaging market specialization; also specialize in automotive, caps & closures, housewares and PET preform applications

Special Machining Plate Work

- Custom mold bases (especially for high cavitation)
- Mold plates, frames and other components
- Clamping plates, cavity plates, etc.
- Hot runner manifold plates
- Parting line plates
- Insulator plates, rails, etc.

Steel Material Options

- Precise machining of all alloy tool steels
  - DME #7 stainless steel (1.2085)
  - DME #3 P-20 modified steel (1.2312)
  - DME #1 steel (1.1730)
  - DME #5 H-13 hot work die steel (1.2343)
  - DME #2 steel (1.2312)
  - DME #6 stainless steel (1.4028)
  - EDRO RoyAlloy
  - Many other types (including customer provided)

- Fully machined custom mold bases, plates and frames for high cavitation injection mold tools, die casting and press tools
- Custom manifolds for hot runner systems
- Mold base/plate assembly (bushings, pins, pillars, etc.)
- All finishing operations executed in climate-controlled areas
- Manufacturing capacity of 300 fully machined mold plates per month
- All plates 3D-measured and delivered with measurement report

Large Mold Plates
26¾ through 33¾ wide

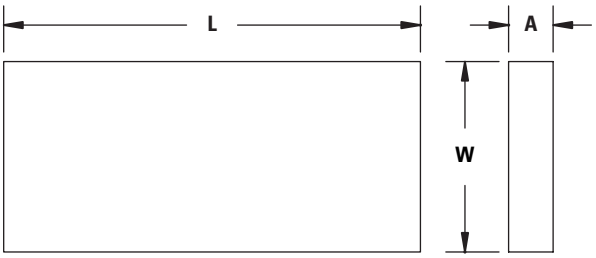

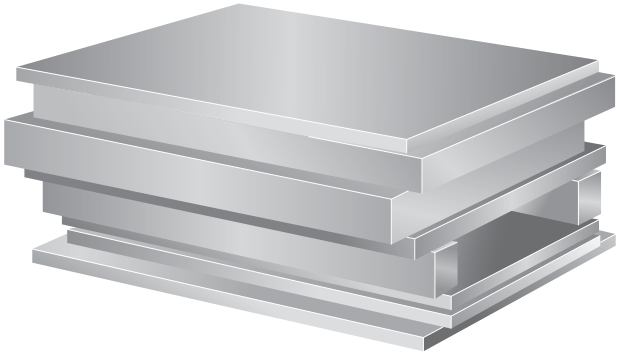

A	26¾ × 30"		26¾ × 36"		26¾ × 42"		26¾ × 48"		26¾ × 54"		29¾ × 30"		29¾ × 36"		29¾ × 42"		A
	ITEM NUMBER	NET WT.	ITEM NUMBER	NET WT.	ITEM NUMBER	NET WT.	ITEM NUMBER	NET WT.	ITEM NUMBER	NET WT.	ITEM NUMBER	NET WT.	ITEM NUMBER	NET WT.	ITEM NUMBER	NET WT.	
1⅜	2730-13	313	2736-13	376	2742-13	438	2748-13	501	2754-13	563	3030-13	348	3036-13	418	3042-13	487	1⅜
1⅞	2730-17	427	2736-17	512	2742-17	597	2748-17	683	2754-17	768	3030-17	475	3036-17	569	3042-17	664	1⅞
2⅞	2730-27	654	2736-27	785	2742-27	916	2748-27	1046	2754-27	1177	3030-27	727	3036-27	873	3042-27	1018	2⅞
3⅞	2730-37	881	2736-37	1058	2742-37	1234	2748-37	1410	2754-37	1586	3030-37	980	3036-37	1176	3042-37	1372	3⅞
4⅞	2730-47	1109	2736-47	1330	2742-47	1552	2748-47	1774	2754-47	1995	3030-47	1233	3036-47	1480	3042-47	1726	4⅞
5⅞	2730-57	1336	2736-57	1603	2742-57	1870	2748-57	2138	2754-57	2405	3030-57	1486	3036-57	1783	3042-57	2080	5⅞

A	29¾ × 48"		29¾ × 54"		33¾ × 36"		33¾ × 42"		33¾ × 48"		33¾ × 54"		33¾ × 60"		A
	ITEM NUMBER	NET WT.	ITEM NUMBER	NET WT.	ITEM NUMBER	NET WT.	ITEM NUMBER	NET WT.	ITEM NUMBER	NET WT.	ITEM NUMBER	NET WT.	ITEM NUMBER	NET WT.	
1⅜	3048-13	557	3054-13	626	3436-13	474	3442-13	553	3448-13	632	3454-13	710	3460-13	789	1⅜
1⅞	3048-17	759	3054-17	854	3436-17	646	3442-17	753	3448-17	861	3454-17	969	3460-17	1076	1⅞
2⅞	3048-27	1164	3054-27	1309	3436-27	990	3442-27	1155	3448-27	1320	3454-27	1485	3460-27	1650	2⅞
3⅞	3048-37	1568	3054-37	1764	3436-37	1334	3442-37	1557	3448-37	1779	3454-37	2001	3460-37	2224	3⅞
4⅞	3048-47	1973	3054-47	2219	3436-47	1679	3442-47	1958	3448-47	2238	3454-47	2518	3460-47	2797	4⅞
5⅞	3048-57	2377	3054-57	2674	3436-57	2023	3442-57	2360	3448-57	2697	3454-57	3034	3460-57	3371	5⅞

Thickness of plate is rotary ground to a tolerance of plus .010", minus .000". Width and length are machined square and parallel to a tolerance of +.015/+.020.

DME No. 1 Steel

DME No. 1 steel is a medium carbon (SAE 1030), silicon-killed forging quality steel with approximately 25% greater tensile strength than typical low-carbon warehouse steels.

DME No. 2 Steel

DME No. 2 steel is an AISI 4130 type steel. It is supplied pre-heat treated to 28-34 HRC (271-321 Bhn). A high-strength steel, DME No. 2 is ideal for cavity and core retainer plates, clamping plates, and support plates in molds and dies.

DME No. 3 Steel

DME No. 3 steel is a P-20 AISI 4130 (modified) type cavity steel, pre-heat treated to 28-34 HRC (271-321 Bhn). It provides high hardness, good machinability and exceptional polishability for both plastics molds and die cast dies.

WHEN ORDERING, PLEASE SPECIFY:

1. Quantity & Item Number
2. No. 1, No. 2 or No. 3 Steel
3. Method of Shipment

NOTE:

Other sizes and materials are available by special order.

Large Mold Plates
37¾ through 45¾ wide

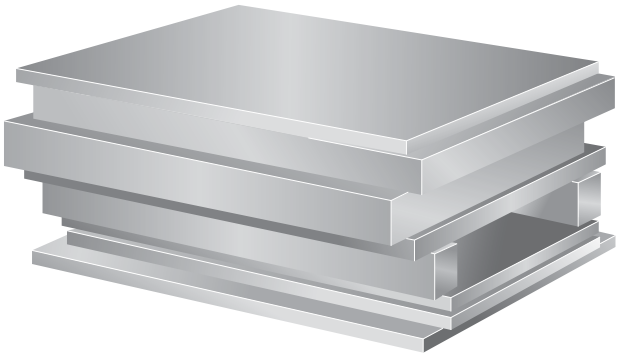

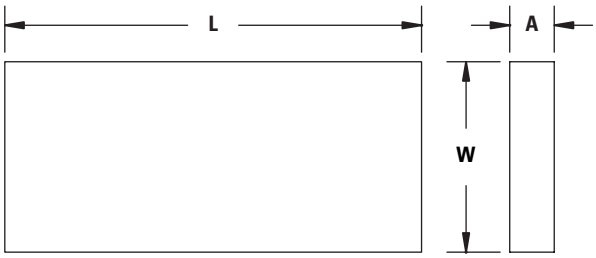

A	37¾ × 42"		37¾ × 48"		37¾ × 54"		37¾ × 60"		37¾ × 66"		41¾ × 42"		41¾ × 48"		41¾ × 54"		A
	ITEM NUMBER	NET WT.	ITEM NUMBER	NET WT.	ITEM NUMBER	NET WT.	ITEM NUMBER	NET WT.	ITEM NUMBER	NET WT.	ITEM NUMBER	NET WT.	ITEM NUMBER	NET WT.	ITEM NUMBER	NET WT.	
1⅜	3842-13	618	3848-13	706	3854-13	795	3860-13	883	3866-13	971	4242-13	684	4248-13	781	4254-13	879	1⅜
1⅞	3842-17	843	3848-17	963	3854-17	1083	3860-17	1204	3866-17	1324	4242-17	932	4248-17	1065	4254-17	1198	1⅞
2⅞	3842-27	1292	3848-27	1476	3854-27	1661	3860-27	1845	3866-27	2030	4242-27	1429	4248-27	1633	4254-27	1837	2⅞
3⅞	3842-37	1741	3848-37	1990	3854-37	2238	3860-37	2487	3866-37	2736	4242-37	1925	4248-37	2200	4254-37	2475	3⅞
4⅞	3842-47	2190	3848-47	2503	3854-47	2816	3860-47	3129	3866-47	3441	4242-47	2422	4248-47	2768	4254-47	3114	4⅞
5⅞	3842-57	2639	3848-57	3016	3854-57	3393	3860-57	3770	3866-57	4147	4242-57	2919	4248-57	3336	4254-57	3753	5⅞

A	41¾ × 60"		41¾ × 66"		45¾ × 48"		45¾ × 54"		45¾ × 60"		45¾ × 66"		A
	ITEM NUMBER	NET WT.	ITEM NUMBER	NET WT.	ITEM NUMBER	NET WT.	ITEM NUMBER	NET WT.	ITEM NUMBER	NET WT.	ITEM NUMBER	NET WT.	
1⅜	4260-13	976	4266-13	1074	4648-13	856	4654-13	963	4660-13	1070	4666-13	1177	1⅜
1⅞	4260-17	1331	4266-17	1464	4648-17	1167	4654-17	1313	4660-17	1459	4666-17	1604	1⅞
2⅞	4260-27	2041	4266-27	2245	4648-27	1789	4654-27	2013	4660-27	2236	4666-27	2460	2⅞
3⅞	4260-37	2750	4266-37	3025	4648-37	2411	4654-37	2713	4660-37	3014	4666-37	3315	3⅞
4⅞	4260-47	3806	4266-47	3460	4648-47	3033	4654-47	3412	4660-47	3792	4666-47	4171	4⅞
5⅞	4260-57	4170	4266-57	4587	4648-57	3655	4654-57	4112	4660-57	4569	4666-57	5026	5⅞

Thickness of plate is rotary ground to a tolerance of plus .010", minus .000". Width and length are machined square and parallel to a tolerance of plus +.015/+.020.

DME No. 1 Steel

DME No. 1 steel is a medium carbon (SAE 1030), silicon-killed forging quality steel with approximately 25% greater tensile strength than typical low-carbon warehouse steels.

DME No. 2 Steel

DME No. 2 steel is an AISI 4130 type steel. It is supplied pre-heat treated to 28-34 HRC (271-321 Bhn). A high strength steel, DME No. 2 is ideal for cavity and core retainer plates, clamping plates, and support plates in molds and dies.

DME No. 3 Steel

DME No. 3 steel is a P-20 AISI 4130 (modified) type cavity steel, pre-heat treated to 28-34 HRC (271-321 Bhn). It provides high hardness, good machinability and exceptional polishability for both plastics molds and die cast dies.

WHEN ORDERING, PLEASE SPECIFY:

1. Quantity & Item Number
2. No. 1, No. 2 or No. 3 Steel
3. Method of Shipment

NOTE:

Other sizes and materials are available by special order.

Ejector Plates and Ejector Retainer Plates for Large Mold Assemblies – DME No. 1 Steel

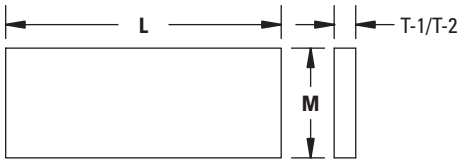

Thickness of plate is rotary ground to a tolerance of plus .010", minus .000". Width and length are machined square and parallel to a tolerance of plus .020", minus .000".

T-1/T-2	M	L	ITEM NUMBER	NET WT.
7/8	20¾	30	7-2130-7	155
		36	7-2136-7	186
		42	7-2142-7	217
		48	7-2148-7	247
		54	7-2154-7	278
	22¾	30	7-2330-7	170
		36	7-2336-7	204
		42	7-2342-7	237
		48	7-2348-7	271
		54	7-2354-7	305
	23¾	30	7-2430-7	177
		36	7-2436-7	212
		42	7-2442-7	248
		48	7-2448-7	283
		54	7-2454-7	318
		60	7-2460-7	354
	25¾	30	7-2630-7	192
		36	7-2636-7	230
		42	7-2642-7	269
		48	7-2648-7	307
		54	7-2654-7	345
		60	7-2660-7	383
	27¾	36	7-2836-7	248
		42	7-2842-7	289
		48	7-2848-7	331
		54	7-2854-7	372
		60	7-2860-7	413
		66	7-2866-7	454
	29¾	36	7-3036-7	266
		42	7-3042-7	310
		48	7-3048-7	354
		54	7-3054-7	399
		60	7-3060-7	443
		66	7-3066-7	487
	31¾	42	7-3242-7	331
		48	7-3248-7	378
		54	7-3254-7	425
		60	7-3260-7	473
		66	7-3266-7	520
	33¾	42	7-3442-7	352
		48	7-3448-7	402
		54	7-3454-7	452
		60	7-3460-7	502
		66	7-3466-7	553
	35¾	42	7-3642-7	373
		48	7-3648-7	426
		54	7-3654-7	479
		60	7-3660-7	532
		66	7-3666-7	585
	37¾	42	7-3842-7	394
		48	7-3848-7	450
		54	7-3854-7	506
		60	7-3860-7	562
		66	7-3866-7	618
	39¾	48	7-4048-7	473
		54	7-4054-7	533
		66	7-4060-7	592
		66	7-4066-7	651

T-1/T-2	M	L	ITEM NUMBER	NET WT.
1 3/8	20¾	30	6-2130-13	243
		36	6-2136-13	291
		42	6-2142-13	340
		48	6-2148-13	388
		54	6-2154-13	437
	22¾	30	6-2330-13	266
		36	6-2336-13	320
		42	6-2342-13	373
		48	6-2348-13	426
		54	6-2354-13	479
	23¾	30	6-2430-13	278
		36	6-2436-13	334
		42	6-2442-13	389
		48	6-2448-13	445
		54	6-2454-13	500
		60	6-2460-13	556
	25¾	30	6-2630-13	301
		36	6-2636-13	362
		42	6-2642-13	422
		48	6-2648-13	482
		54	6-2654-13	542
		60	6-2660-13	602
	27¾	36	6-2836-13	390
		42	6-2842-13	454
		48	6-2848-13	519
		54	6-2854-13	584
		60	6-2860-13	649
		66	6-2866-13	714
	29¾	36	6-3036-13	478
		42	6-3042-13	487
		48	6-3048-13	557
		54	6-3054-13	626
		60	6-3060-13	696
		66	6-3066-13	765
	31¾	42	6-3242-13	520
		48	6-3248-13	594
		54	6-3254-13	668
		60	6-3260-13	743
		66	6-3266-13	817
	33¾	42	6-3442-13	553
		48	6-3448-13	632
		54	6-3454-13	710
		60	6-3460-13	789
		66	6-3466-13	868
	35¾	42	6-3642-13	585
		48	6-3648-13	669
		54	6-3654-13	752
		60	6-3660-13	836
		66	6-3666-13	920
	37¾	42	6-3842-13	618
		48	6-3848-13	706
		54	6-3854-13	795
		60	6-3860-13	883
		66	6-3866-13	971
	39¾	48	6-4048-13	744
		54	6-4054-13	837
		66	6-4060-13	930
		66	6-4066-13	1022

T-1/T-2	M	L	ITEM NUMBER	NET WT.
1 7/8	20¾	30	6-2130-17	331
		36	6-2136-17	397
		42	6-2142-17	463
		48	6-2148-17	530
		54	6-2154-17	596
	22¾	30	6-2330-17	363
		36	6-2336-17	436
		42	6-2342-17	508
		48	6-2348-17	581
		54	6-2354-17	653
	23¾	30	6-2430-17	379
		36	6-2436-17	455
		42	6-2442-17	530
		48	6-2448-17	606
		54	6-2454-17	682
		60	6-2460-17	757
	25¾	30	6-2630-17	411
		36	6-2636-17	493
		42	6-2642-17	575
		48	6-2648-17	657
		54	6-2654-17	739
		60	6-2660-17	821
	27¾	36	6-2836-17	531
		42	6-2842-17	620
		48	6-2848-17	708
		54	6-2854-17	796
		60	6-2860-17	885
		66	6-2866-17	973
	29¾	36	6-3036-17	569
		42	6-3042-17	664
		48	6-3048-17	759
		54	6-3054-17	854
		60	6-3060-17	949
		66	6-3066-17	1043
	31¾	42	6-3242-17	709
		48	6-3248-17	810
		54	6-3254-17	911
		60	6-3260-17	1012
		66	6-3266-17	1114
	33¾	42	6-3442-17	753
		48	6-3448-17	861
		54	6-3454-17	969
		60	6-3460-17	1076
		66	6-3466-17	1184
	35¾	42	6-3642-17	798
		48	6-3648-17	912
		54	6-3654-17	1026
		60	6-3660-17	1140
		66	6-3666-17	1254
	37¾	42	6-3842-17	843
		48	6-3848-17	963
		54	6-3854-17	1083
		60	6-3860-17	1204
		66	6-3866-17	1324
	39¾	48	6-4048-17	1014
		54	6-4054-17	1141
		66	6-4060-17	1267
		66	6-4066-17	1394

WHEN ORDERING, PLEASE SPECIFY:

1. Quantity
2. Item Number
3. Method of Shipment

Spacer Blocks for Large Mold Assemblies
DME No. 1 Steel

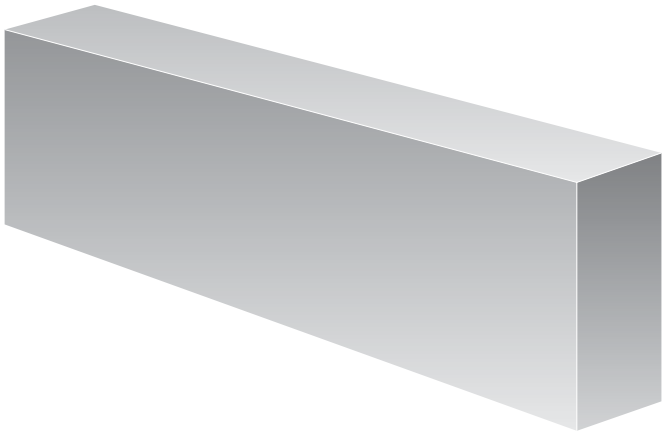

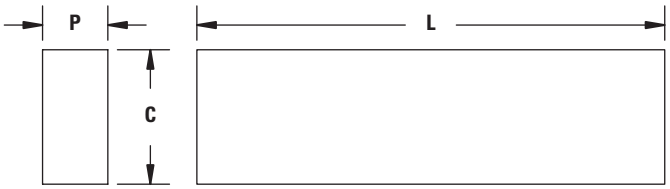

Machined all over. Riser heights ("C" dimension) are finish ground to a tolerance of plus or minus .001".

P	C	L	ITEM NUMBER	NET WT.
1⅞	5	30	50-1730	80
		36	50-1736	96
		42	50-1742	112
		48	50-1748	128
		54	50-1754	144
		60	50-1760	160
		66	50-1766	176
	6	30	60-1730	96
		36	60-1736	115
		42	60-1742	134
		48	60-1748	153
		54	60-1754	173
		60	60-1760	192
		66	60-1766	211
	8	30	80-1730	128
		36	80-1736	153
		42	80-1742	179
		48	80-1748	204
		54	80-1754	230
		60	80-1760	255
		66	80-1766	281

P	C	L	ITEM NUMBER	NET WT.
2⅞	5	30	50-2730	123
		36	50-2736	147
		42	50-2742	172
		48	50-2748	196
		54	50-2754	220
		60	50-2760	245
		66	50-2766	269
	6	30	60-2730	147
		36	60-2736	176
		42	60-2742	206
		48	60-2748	235
		54	60-2754	264
		60	60-2760	294
		66	60-2766	323
	8	30	80-2730	196
		36	80-2736	235
		42	80-2742	274
		48	80-2748	313
		54	80-2754	352
		60	80-2760	391
		66	80-2766	431

P	C	L	ITEM NUMBER	NET WT.
3⅞	5	–	–	–
		36	50-3736	198
		42	50-3742	231
		48	50-3748	264
		54	50-3754	297
		60	50-3760	330
		66	50-3766	363
	6	–	–	–
		36	60-3736	238
		42	60-3742	277
		48	60-3748	317
		54	60-3754	356
		60	60-3760	396
		66	60-3766	435
	8	–	–	–
		36	80-3736	317
		42	80-3742	369
		48	80-3748	422
		54	80-3754	475
		60	80-3760	527
		66	80-3766	580

WHEN ORDERING, PLEASE SPECIFY:

1. Quantity
2. Item Number
3. Method of Shipment

Steel Processing Services to meet your Special Requirements




DME Company has been buying, cutting, machining and finishing high-quality steel for seven decades. We understand that our customers face unprecedented demands for speed, cost reduction and performance. To assist you in meeting your challenges, we've developed an industry-leading steel processing infrastructure, including the specialized equipment and technical expertise to handle the most demanding steel requirements. It's a unique capability that's just one way DME strives to be an essential resource to the customers we serve.

DME's North American manufacturing locations have some of the largest, most modern sawing, straightening, milling and grinding equipment in the industry. As one of the world's largest users of alloy steel plate, DME has a close working relationship with the leading steel mills. This provides you with the ability to meet whatever special steel requirements you may have by working with us. Steel plates and blocks of any size and grade of steel are available from DME.

Any specified steel condition – rough, semi-finished or finished (milled or ground) is available to order. Even specially machined large blocks and plates are available.

Steel Plate

Let DME quote your machining requirements for steel plate. As a convenient, one-stop solution, DME can reduce your overall costs whether your needs only require plate machining, or drilling, tapping, boring, and milling, as well. DME prides itself on providing highly competent technical support and highly responsive customer service. We specialize in supplying the steel product that meets your exact specification.

Steel Processing Services

DME's steel processing services for moldmakers and die casters provide a full array of steel machining capabilities to customers worldwide. DME can supply plates, strips and blocks from our inventory or accept your material for the machining services we offer.

Available Services

DME can execute CNC machining to your exact specifications whether we're provided hand drawings or CAD files. The list below includes just some of the services that we handle every day:

- Steel plates, strips and blocks up to 6⅛" thick available in 1030, 4130, P-20 and 420F
- Plate sawing up to 150" long and 20" thick
- Flame cut strips up to 6⅛" thick
- Horizontal and vertical band sawing
- Flattening with 2,000-ton press or roller leveling
- Milling up to 150" long, 46" wide and 20" thick
- Edge milling up to 70" square; beveled edge machining
- Rotary grinding on 84" or 42" Blanchard or double-disc grinding
- Finish grinding up to 40" wide

Quality You Can Count On!

Quality has been and continues to be a part of our fabric at DME, and our undying commitment to quality extends throughout all facets of our business. To maintain customer focus, all DME Quality Management Systems are ISO 9001:2000 certified. We undergo continuous testing for quality including consistently measuring tooling, calibrating our machinery, and inspecting finished work to ensure our customers receive quality they can count on. The DME high standard for quality has been a hallmark of DME since its inception and is just another aspect of how we partner with you every step of the way.

DME Molding Supplies

CLEAN AND PROTECT YOUR MOLDS WITH DME MOLD CLEANER AND MOLD SAVER

Mold Cleaner and Mold Saver

DME MOLD CLEANER

DME Mold Cleaner is used to remove corrosion forming substances such as lactic acid, urea and sodium chloride, which are common in perspiration residues left by ordinary handling of polished cavities. In addition to cleaning the polished cavity it also provides up to 20 days rust protection at temperatures to 120°F at 100% humidity.

Use DME Mold Cleaner to clean polished mold surfaces and protect them for up to 20 days. Use DME Mold Saver for long lasting protection from corrosion.

ITEM NUMBER	MOLD CLEANER DESCRIPTION
CLE 0001	(1) 12 oz. aerosol can
CLE 0012	Case of (12) 12 oz. aerosol cans
CLE 0004	(1) one gallon can
CLE 0016	Case of (4) one gallon cans

See the DME Equipment and Supplies catalog for moldmaker supplies. For a complete line of Molding Supplies, contact DME to receive a catalog.

Available in 12 oz. aerosol or 1 gallon non-aerosol... individually or by the case.

DME MOLD SAVER

DME Mold Saver is an ideal protective coating for molds to be stored over a long period of time. It protects polished cavities and all metal parts from costly corrosion damage. Its thin, transparent film averages about .0003" thick. It is soft, dry and waxy and can be easily wiped off without solvents. One can of Mold Saver covers about 80 square feet.

ITEM NUMBER	MOLD SAVER DESCRIPTION
SAV 0001	(1) 12 oz. aerosol can
SAV 0012	Case of (12) 12 oz. aerosol cans
SAV 0004	(1) one gallon can
SAV 0016	Case of (4) one gallon cans

QUANTITY DISCOUNT:

2 to 5 cases ..... Less 3%
6 to 19 cases ..... Less 5%
20 to 50 cases ..... Less 8%
51 or more cases ..... Less 12%

BLANKET ORDER DISCOUNT:

Money-saving blanket orders reduce your inventory costs and permit maximum savings over a twelve month period. They are accepted provided the combined annual order totals 20 cases or more. Split shipments against blanket orders must be in quantities of 10 cases or more.

ACCESSORIES FOR MOLD CLEANER AND MOLD SAVER

TRIGGER PUMPS
for 15 oz. cans

ITEM NUMBER	DESCRIPTION
SAV 0003	Package of (6) trigger pumps

"SURE SHOT" COMPRESSED-AIR SPRAY CANISTER

Holds one quart of Mold Cleaner or Mold Saver. Metal can is refillable and reusable. Includes stemmed air valve.

ITEM NUMBER
SAV 0002

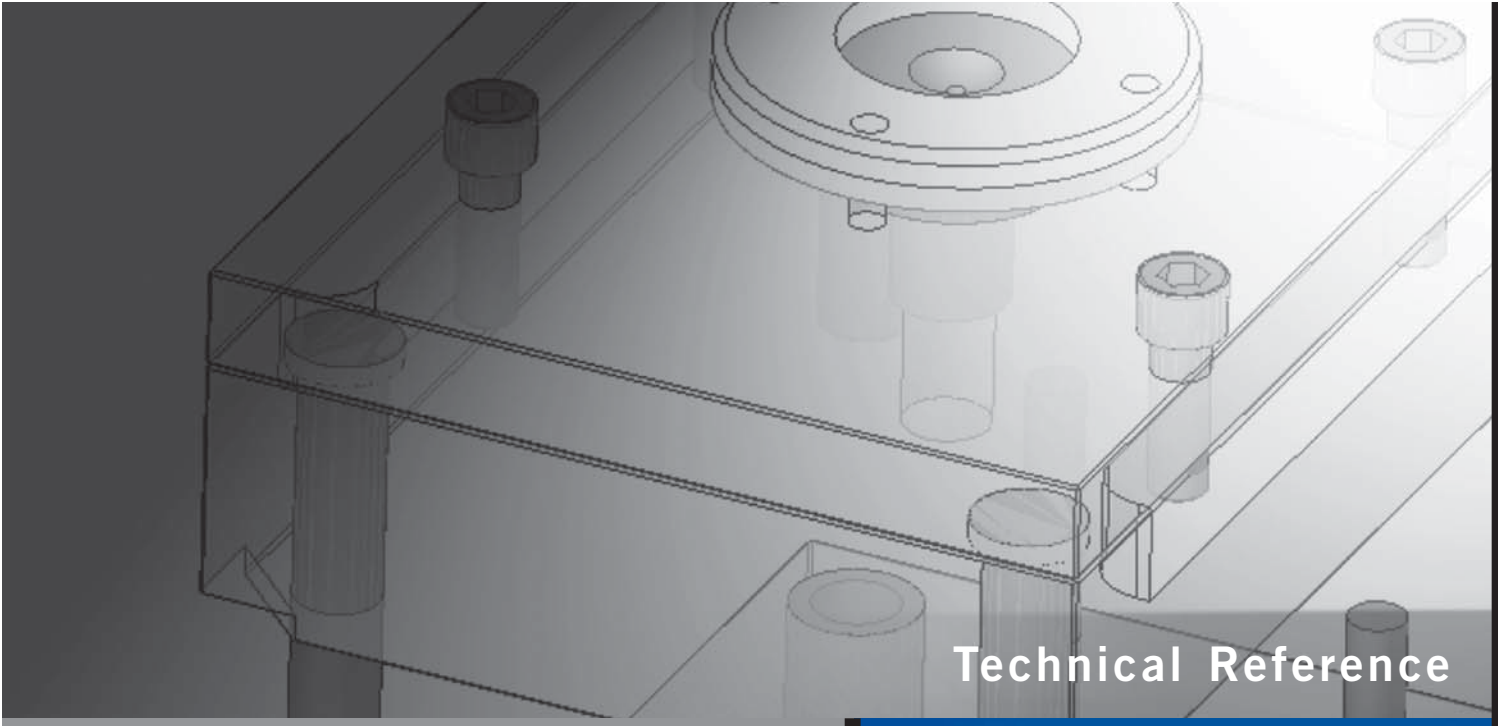

Technical Reference

Table of Contents

Metric Equivalents and Conversions 278
Steel Hardness Chart 279
Tensile Strength 280
Draft Angles 281
Steel Designations 282
Determining Metric Tolerances 283-294
American Standard Mold Base Features 295-296

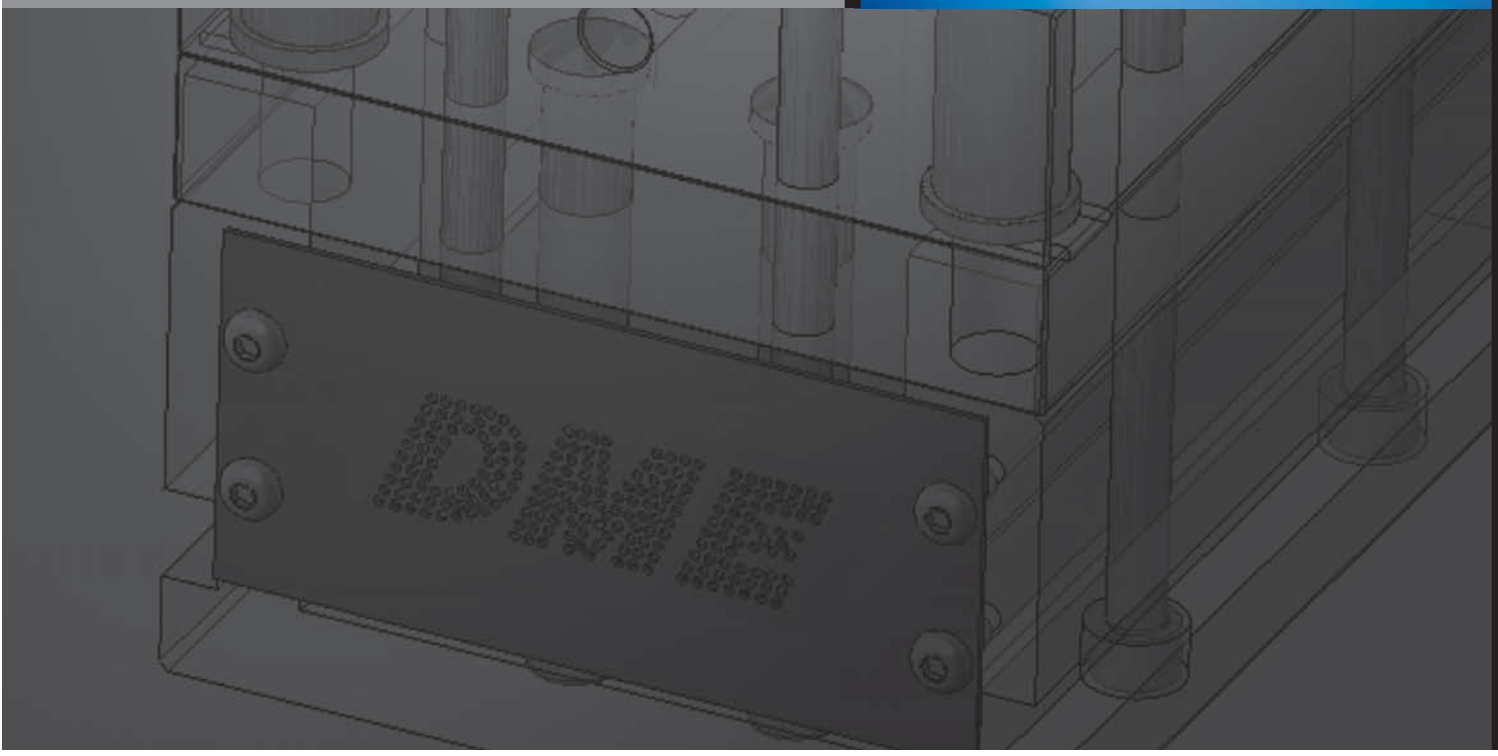

Metric Equivalents and Conversions

Equivalents: Inch, fraction, decimal, millimeter

INCHES	MILLIMETERS	INCHES	MILLIMETERS
1	25.4	34	863.6
2	50.8	35	889.0
3	76.2	36	914.4
4	101.6	37	939.8
5	127.0	38	965.2
6	152.4	39	990.6
7	177.8	40	1016.0
8	203.2	41	1041.4
9	228.6	42	1066.8
10	254.0	43	1092.2
11	279.4	44	1117.6
12	304.8	45	1143.0
13	330.2	46	1168.4
14	355.6	47	1193.8
15	381.0	48	1219.2
16	406.4	49	1244.6
17	431.8	50	1270.0
18	457.2	51	1295.4
19	482.6	52	1320.8
20	508.0	53	1346.2
21	533.4	54	1371.6
22	558.8	55	1397.0
23	584.2	56	1422.4
24	609.6	57	1447.8
25	635.0	58	1473.2
26	660.4	59	1498.6
27	685.8	60	1524.0
28	711.2	61	1549.4
29	736.6	62	1574.8
30	762.0	63	1600.2
31	787.4	64	1625.6
32	812.8	65	1651.0
33	838.2	66	1676.4

INCHES		MILLIMETERS	INCHES		MILLIMETERS
1/64	0.015625	0.396875	33/64	0.515625	13.096875
1/32	0.031250	0.793750	17/32	0.531250	13.493750
3/64	0.046875	1.190625	35/64	0.546875	13.890625
1/16	0.062500	1.587500	9/16	0.562500	14.287500
5/64	0.078125	1.984375	37/64	0.578125	14.684375
3/32	0.093750	2.381250	19/32	0.593750	15.081250
7/64	0.109375	2.778125	39/64	0.609375	15.478125
1/8	0.125000	3.175000	5/8	0.625000	15.875000
9/64	0.140625	3.571875	41/64	0.640625	16.271875
5/32	0.156250	3.968750	21/32	0.656250	16.668750
11/64	0.171875	4.365625	43/64	0.671875	17.065625
3/16	0.187500	4.762500	11/16	0.687500	17.462500
13/64	0.203125	5.159375	45/64	0.703125	17.859375
7/32	0.218750	5.556250	23/32	0.718750	18.256250
15/64	0.234375	5.953125	47/64	0.734375	18.653125
1/4	0.250000	6.350000	3/4	0.750000	19.050000
17/64	0.265625	6.746875	49/64	0.765625	19.446875
9/32	0.281250	7.143750	25/32	0.781250	19.843750
19/64	0.296875	7.540625	51/64	0.796875	20.240625
5/16	0.312500	7.937500	13/16	0.812500	20.637500
21/64	0.328125	8.334375	53/64	0.828125	21.034375
11/32	0.343750	8.731250	27/32	0.843750	21.431250
23/64	0.359375	9.128125	55/64	0.859375	21.828125
3/8	0.375000	9.525000	7/8	0.875000	22.225000
25/64	0.390625	9.921875	57/64	0.890625	22.621875
13/32	0.406250	10.318750	29/32	0.906250	23.018750
27/64	0.421875	10.715625	59/64	0.921875	23.415625
7/16	0.437500	11.112500	15/16	0.937500	23.812500
29/64	0.453125	11.509375	61/64	0.953125	24.209375
15/32	0.468750	11.906250	31/32	0.968750	24.606250
31/64	0.484375	12.303125	63/64	0.984375	25.003125
1/2	0.500000	12.700000	1	1.000000	25.400000

Equivalents: Decimal, millimeter

INCHES	MILLIMETERS	INCHES	MILLIMETERS	INCHES	MILLIMETERS
0.001	0.0254	0.01	0.254	0.1	2.54
0.002	0.0508	0.02	0.508	0.2	5.08
0.003	0.0762	0.03	0.762	0.3	7.62
0.004	0.1016	0.04	1.016	0.4	10.16
0.005	0.1270	0.05	1.270	0.5	12.70
0.006	0.1524	0.06	1.524	0.6	15.24
0.007	0.1778	0.07	1.778	0.7	17.78
0.008	0.2032	0.08	2.032	0.8	20.32
0.009	0.2286	0.09	2.286	0.9	22.86

Measurement conversions

MULTIPLY BY ←	FROM → / TO ←	TO → / FROM ←	MULTIPLY BY →
0.03937	inch	millimeter	25.4
0.0016	$inch^2$	$millimeter^2$	645.16
0.061	$inch^3$	$centimeter^3$	16.3871
0.2642	gallon (U.S.)	liter	3.7854
0.03527	oz. (avdp.)	gram	28.3495
2.2044	pound	kilogram	0.4536
62.43	lbs/ft^3	g/cm^3	0.0160
0.145	psi	kPa	6.8948
14.2247	psi	kg/cm^2	0.0703
1.8°C + 32	°F	°C	(°F-32)/1.8

Steel Hardness Chart

CROSS-REFERENCE BETWEEN DIFFERENT HARDNESS MEASUREMENTS					
BRINELL HARDNESS BHN*	VICKERS HARDNESS HV	ROCKWELL HARDNESS HRA	ROCKWELL HARDNESS HRB	ROCKWELL HARDNESS HRC	SHORE HARDNESS HS
10mm BALL, 3000kgf LOAD	136° DIAMOND PYRAMID, 10kgf LOAD	BRALE PENETRATOR, 60kgf LOAD	1/16 INCH BALL, 100kgf LOAD	BRALE PENETRATOR, 150kgf LOAD	
86	90		48		
95	100		56.2		
105	110		62.3		
114	120		66.7		
124	130		71.2		20
133	140		75		21
143	150		78.7		22
152	160		81.7	(0)	24
162	170		85	(3)	25
171	180		87.1	(6)	26
181	190		89.5	(8.5)	28
190	200		91.5	(11)	29
200	210		93.4	(13.4)	30
209	220		95	(15.7)	32
219	230		96.7	(18)	33
228	240	60.7	98.1	20.3	34
238	250	61.6	99.5	22.2	36
247	260	62.4	(101)	24	37
256	270	63.1	(102)	25.6	38
265	280	63.8	(103.5)	27.1	40
275	290	64.5	(104.5)	28.5	41
284	300	65.2	(105.5)	29.8	42
303	320	66.4	(107)	32.2	45
322	340	67.6	(108)	34.4	47
341	360	68.7	(109)	36.6	50
360	380	69.8	(110)	38.8	52
379	400	70.8		40.8	55
397	420	71.8		42.7	57
415	440	72.8		44.5	59
433	460	73.6		46.1	62
452	480	74.5		47.7	64
471	500	75.3		49.1	66
488	520	76.1		50.5	67
507	540	76.7		51.7	69
525	560	77.4		53	71
545	580	78		54.1	72
564	600	78.6		55.2	74
582	620	79.2		56.3	75
601	640	79.8		57.3	77
620	660	80.3		58.3	79
638	680	80.8		59.2	80
656	700	81.3		60.1	81
670	720	81.8		61	83
684	740	82.2		61.8	84
698	760	82.6		62.5	86
710	780	83		63.3	87
722	800	83.4		64	88
745	840	84.1		65.3	91
767	880	84.7		66.4	93
*A 10mm steel ball is used for 450 BHN and below. A 10mm carbide ball is used above 450 BHN.	Also known as Firth Diamond Hardness Number.		Values in parentheses are not contained in the normal definition range for hardness checking, but are often used in a comparable measure.		

All values shown in this chart are approximate and intended only as a reference guide.

Tensile Strength

GENERAL STEEL GROUP THROUGH HARDNESS VERSUS APPROXIMATE TENSILE STRENGTH									
HARDNESS		TENSILE STRENGTH							
BRINELL HARDNESS BHN*	ROCKWELL HARDNESS HRC	PLAIN CARBON STEEL AND LOW ALLOY STEEL		STAINLESS STEEL AUSTENITIC TYPE			STAINLESS STEEL CHROMIUM TYPE		
10mm BALL, 3000kgf LOAD	BRALE PENETRATOR, 150kgf LOAD	N/mm² (APPROX.)	PSI (APPROX.)	kgf/mm² (APPROX.)	N/mm² (APPROX.)	PSI (APPROX.)	kgf/mm² (APPROX.)	N/mm² (APPROX.)	PSI (APPROX.)
86		285	41,334						
95		320	46,410						
105		350	50,761						
114		385	55,837						
124		415	60,188						
133		450	65,264						
143		480	69,615	50	490	71,115	50	490	71,115
152	(0)	510	73,966	56	549	79,649	53	520	75,382
162	(3)	545	79,042	62	608	88,183	59	579	83,916
171	(6)	575	83,393	62	608	88,183	59	579	83,916
181	(8.5)	610	88,470	68	667	96,716	65	637	92,450
190	(11)	640	92,820	68	667	96,716	65	637	92,450
200	(13.4)	675	97,897	75	736	106,673	71	696	100,983
209	(15.7)	705	102,248	75	736	106,673	71	696	100,983
219	(18)	740	107,324	80	785	113,784	78	765	110,939
228	20.3	770	111,675	80	785	113,784	78	765	110,939
238	22.2	800	116,026	85	834	120,896	81	794	115,206
247	24	835	121,102	88	863	125,162			
256	25.6	865	125,453	91	892	129,429	88	863	125,162
265	27.1	900	130,529	94	922	133,696			
275	28.5	930	134,880	97	951	137,963	96	941	136,541
284	29.8	965	139,956	100	981	142,230			
303	32.2	1,030	149,383	109	1,069	155,031	106	1,040	150,764
322	34.4	1,095	158,810	118	1,157	167,831	113	1,108	160,720
341	36.6	1,155	167,512	127	1,245	180,632	120	1,177	170,676
360	38.8	1,220	176,939	136	1,334	193,433	127	1,245	180,632
379	40.8	1,290	187,091	145	1,422	206,234	134	1,314	190,588
397	42.7	1,350	195,793	156	1,530	221,879			
415	44.5	1,420	205,945	167	1,638	237,524			
433	46.1	1,485	215,372	178	1,746	253,169			
452	47.7	1,555	225,525	189	1,853	268,815			
471	49.1	1,630	236,402	200	1,961	284,460			
488	50.5	1,700	246,554	209	2,050	297,261			
507	51.7	1,775	257,432	218	2,138	310,061			
525	53	1,845	267,584	227	2,226	322,862			
545	54.1	1,920	278,461	236	2,314	335,663			
564	55.2	1,995	289,339	245	2,403	348,464			

*A 10mm steel ball is used for 450 BHN and below. A 10mm carbide ball is used above 450 BHN.

Values in parentheses are not contained in the normal definition range for hardness checking, but are often used in a comparable measure.

The Tensile Strength relationship to hardness is inexact, even for the steel, unless it is determined for a specific material. Therefore, this chart provides only very general approximate Tensile Strength values.

All values shown in this chart are approximate and intended only as a reference guide.

Draft Angles

DEPTH	1/2°	1°	2°	3°	4°	5°	6°	7°	8°	9°	10°	11°	12°	15°	20°	25°	30°	DEPTH
1/32	.0003	.0005	.001	.0016	.002	.0027	.003	.0038	.004	.005	.0055	.006	.0066	.008	.011	.014	.018	1/32
1/16	.0005	.0011	.002	.0033	.004	.0055	.007	.0077	.009	.010	.011	.012	.013	.017	.023	.029	.036	1/16
3/32	.0008	.0017	.003	.0049	.006	.008	.010	.0115	.013	.015	.0165	.018	.020	.025	.034	.044	.054	3/32
1/8	.0011	.0022	.004	.0066	.009	.0109	.013	.015	.018	.020	.022	.024	.027	.033	.045	.058	.072	1/8
5/32	.0014	.0028	.005	.008	.011	.014	.016	.019	.022	.025	.027	.030	.033	.042	.057	.073	.089	5/32
3/16	.0016	.0033	.006	.0098	.013	.016	.019	.023	.027	.030	.033	.036	.040	.050	.068	.087	.108	3/16
7/32	.0019	.0039	.008	.011	.015	.019	.023	.027	.031	.035	.039	.042	.047	.059	.080	.102	.126	7/32
1/4	.0022	.0043	.009	.013	.018	.022	.026	.031	.035	.040	.044	.049	.053	.067	.091	.117	.144	1/4
9/32	.0025	.005	.010	.014	.020	.024	.030	.034	.040	.045	.049	.055	.060	.075	.102	.131	.162	9/32
5/16	.0027	.0055	.011	.016	.022	.027	.033	.038	.044	.050	.055	.061	.066	.084	.114	.146	.180	5/16
11/32	.003	.006	.012	.018	.024	.030	.036	.042	.049	.055	.061	.067	.073	.092	.125	.160	.197	11/32
3/8	.0032	.0066	.013	.020	.026	.033	.039	.046	.053	.060	.066	.073	.080	.100	.136	.175	.217	3/8
13/32	.0035	.007	.014	.021	.028	.035	.043	.050	.057	.064	.071	.079	.086	.108	.148	.189	.234	13/32
7/16	.0038	.0077	.015	.023	.031	.038	.046	.054	.062	.069	.077	.085	.093	.117	.159	.204	.253	7/16
15/32	.0041	.008	.016	.024	.033	.041	.049	.058	.066	.074	.083	.091	.100	.126	.171	.219	.270	15/32
1/2	.0044	.0088	.018	.026	.035	.044	.053	.061	.071	.079	.088	.097	.106	.134	.182	.233	.289	1/2
17/32	.0046	.009	.019	.028	.037	.046	.056	.065	.075	.084	.093	.103	.113	.142	.193	.247	.306	17/32
9/16	.0049	.0099	.020	.030	.039	.049	.059	.069	.079	.088	.099	.109	.120	.151	.205	.262	.325	9/16
19/32	.0052	.010	.021	.031	.042	.052	.062	.073	.084	.094	.105	.115	.127	.159	.216	.277	.343	19/32
5/8	.0055	.011	.022	.033	.044	.055	.066	.077	.088	.100	.110	.120	.133	.167	.227	.291	.361	5/8
21/32	.0057	.011	.023	.035	.046	.057	.069	.082	.092	.104	.115	.127	.140	.176	.239	.306	.379	21/32
11/16	.006	.012	.024	.036	.048	.060	.072	.085	.096	.109	.121	.133	.147	.183	.250	.321	.397	11/16
23/32	.0063	.013	.025	.038	.050	.063	.075	.088	.101	.114	.126	.139	.153	.193	.261	.335	.415	23/32
3/4	.0065	.013	.027	.039	.053	.066	.079	.092	.106	.119	.132	.146	.159	.201	.273	.350	.433	3/4
25/32	.0068	.014	.028	.040	.055	.068	.081	.096	.110	.124	.137	.152	.166	.209	.284	.364	.451	25/32
13/16	.0071	.014	.029	.043	.057	.071	.085	.100	.115	.129	.143	.158	.173	.218	.296	.379	.469	13/16
27/32	.0074	.015	.030	.045	.059	.074	.089	.104	.119	.134	.149	.163	.180	.226	.307	.393	.487	27/32
7/8	.0076	.015	.031	.046	.061	.077	.092	.107	.123	.139	.154	.171	.186	.234	.318	.408	.505	7/8
29/32	.0079	.016	.032	.048	.063	.079	.095	.111	.128	.144	.159	.176	.193	.243	.329	.422	.523	29/32
15/16	.0082	.017	.033	.050	.066	.082	.098	.115	.132	.149	.165	.182	.200	.251	.341	.437	.541	15/16
31/32	.0085	.017	.034	.051	.068	.084	.101	.119	.137	.153	.170	.188	.206	.260	.353	.452	.559	31/32
1	.0087	.0175	.035	.052	.070	.087	.105	.123	.141	.158	.176	.194	.213	.268	.364	.466	.577	1
DEPTH	1/2°	1°	2°	3°	4°	5°	6°	7°	8°	9°	10°	11°	12°	15°	20°	25°	30°	DEPTH

The depth columns represent cavities from 1/32" to 1" in increments of 1/32". The most commonly used draft angles are noted in degrees at the top and bottom of the table. The measurement listed in any block represents the amount of draft obtained with the corresponding angle and cavity depth.

EXAMPLE: The difference between the diameter of the top and the diameter of the bottom of a 1/2" inch cavity with a draft angle of 8° is found by noting the figure in the table opposite the 1/2" depth and corresponding to the 8° draft angle (.071°) and multiplying by two (1.420").

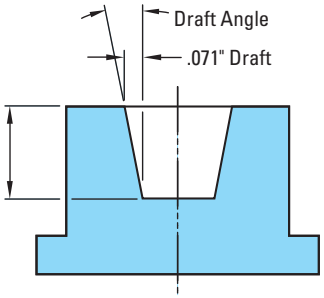

The length and necessary angle for cam pins used in actuating core pulls can also be calculated with this table.

EXAMPLE: The length of a pin set at a 15° angle required to pull a core 1". Since 20° and 1" of length allow .364" travel, a 4" pin permits four times the travel (1.456").

Steel Designations

GENERAL STEEL GROUP DESIGNATIONS					
PLAIN CARBON STEEL	LOW ALLOY CARBON STEEL	COLD WORK TOOL STEEL	HOT WORK TOOL STEEL	STAINLESS STEEL AUSTENITIC TYPE	STAINLESS STEEL CHROMIUM TYPE (MARTENSITIC & FERRITIC)
AISI	AISI	AISI	AISI	AISI	AISI
1000 SERIES	4000 SERIES	A2	H10	201	410
	5000 SERIES	A3A	H11	203	416
	6000 SERIES	4	H12	205	420
	8000 SERIES	A5	H13	301	429
	9000 SERIES	A6	H14	302	430
		A7	H19	303	431
		A8	H21	304	434
		A9	H22	305	436
		A10	H23	307	439
		D2	H24	308	440
		D3	H25	309	442
		D4	H26	310	444
		D5	H40	314	446
		D7	H41	316	
			H42	317	
			H43	318	
				321	
				329	
				330	
				332	
				334	
				347	
				348	
				384	
				385	

GENERAL STEEL CROSS-REFERENCE INFORMATION*	
GERMAN WERKSTOFF STANDARD NUMBER FOR STEEL	U.S. STEEL NUMBER AISI
1.0716	NO CROSS-REFERENCE
1.0718	12 L 13 TYPE*
1.1191	1045 TYPE*
1.1730	NO CROSS-REFERENCE
1.2210	L-2 TYPE*
1.2344	H-13 TYPE*
1.2826	NO CROSS-REFERENCE
1.4305	303 TYPE STAINLESS*
1.5710 (AFNOR 35 NC 6)	3135 TYPE*
1.7131	5115 TYPE (SIMILAR TO 1018 & 8620)*
1.8159 (DIN 50 CrV 4)	6150 TYPE*

*Exchangeability should only be considered after thorough examination of individual case.

Tables for Determining Metric Tolerances

Table 1: Description of Preferred Fits

Table 1 is pulled from the ANSI metric tolerances section of the machinists' handbook, which conforms to the ISO and DIN tolerances for hole basis and shaft basis fits. Table 1 provides an overview of the hole basis and shaft basis fits that make up clearance fit, transition fit and interference fit combinations.

	ISO SYMBOL			
	HOLE BASIS	SHAFT BASIS		
CLEARANCE FITS	H11/c11	C11/h11	LOOSE RUNNING FIT	FOR WIDE COMMERCIAL TOLERANCES OR ALLOWANCES ON EXTERNAL MEMBERS.
	H9/d9	D9/h9	FREE RUNNING FIT	NOT FOR USE WHERE ACCURACY IS ESSENTIAL, BUT GOOD FOR LARGE TEMPERATURE VARIATIONS, HIGH RUNNING SPEEDS, OR HEAVY JOURNAL PRESSURES.
	H8/f7	F8/h7	CLOSE RUNNING FIT	FOR RUNNING ON ACCURATE MACHINES AND FOR ACCURATE LOCATION AT MODERATE SPEEDS AND JOURNAL PRESSURES.
	H7/g6	G7/h6	SLIDING FIT	NOT INTENDED TO RUN FREELY, BUT TO MOVE AND TURN FREELY AND LOCATE ACCURATELY.
	H7/h6	H7/h6	LOCATIONAL CLEARANCE FIT	PROVIDES SNUG FIT FOR LOCATING STATIONARY PARTS; BUT CAN BE FREELY ASSEMBLED AND DISASSEMBLED.
TRANSITION FITS	H7/k6	K7/h6	LOCATIONAL TRANSITION FIT	FOR ACCURATE LOCATION, A COMPROMISE BETWEEN CLEARANCE AND INTERFERENCE.
	H7/n6	N7/h6	LOCATIONAL TRANSITION FIT	FOR MORE ACCURATE LOCATION WHERE GREATER INTERFERENCE IS PERMISSIBLE.
INTERFERENCE FITS	H7/p6*	P7/h6	LOCATIONAL INTERFERENCE FIT	FOR PARTS REQUIRING RIGIDITY AND ALIGNMENT WITH PRIME ACCURACY OF LOCATION BUT WITHOUT SPECIAL BORE PRESSURE REQUIREMENTS.
	H7/s6	S7/h6	MEDIUM DRIVE FIT	FOR ORDINARY STEEL PARTS OR SHRINK FITS ON LIGHT SECTIONS, THE TIGHTEST FIT USABLE WITH CAST IRON.
	H7/u6	U7/h6	FORCE FIT	SUITABLE FOR PARTS WHICH CAN BE HIGHLY STRESSED OR FOR SHRINK FITS WHERE THE HEAVY PRESSING FORCES REQUIRED ARE IMPRACTICAL.

Excerpt from *Machinists' Handbook*, pg. 661, 25 Ed., Industrial Press.
*The H7/p6 Hole Basis fit is a transition fit for basic sizes in ranges from 0 through 3mm.

Tables for Determining Metric Tolerances

Table 2: Commonly Used Hole-Basis System of Fits

Table 2 shows closer detail on the hole-basis system of fits than Table 1. When using the hole-basis system of fits, the smallest diameter in the hole tolerance range is fixed to the zero line (basic nominal hole size or diameter), and the clearance between the shaft and hole extends below the zero line, or negative relative to the basic nominal hole size.

BASIC HOLES	LETTER SYMBOLS AND GRADE NUMBERS OF SHAFTS																
	CLEARANCE FITS						TRANSITION FITS				INTERFERENCE FITS						
	b	c	d	e	f	g	h	js	k	m	n	p	r	s	t	u	x
H5						4	4	4	4	4							
H6						5	5	5	5	5							
					6	6	6	6	6	6	6*	6*					
H7				6	6	6	6	6	6	6	6	6*	6*	6	6	6	6
				7	7	7	7	7	7	7	7	7*	7*	7	7	7	7
					7		7										
H8				8	8		8										
			9	9													
H9			8	8			8										
		9	9	9			9										
H10	9	9	9														

*Exceptions occur in some steps of dimensions.

Table 3: Commonly Used Shaft-Basis System of Fits

Table 3 shows closer detail on the shaft-basis system of fits than Table 1. When using the shaft-basis system of fits, the largest diameter in the shaft tolerance range is fixed to the zero line (basic nominal shaft size or diameter), and the clearance between the shaft and hole extends above the zero line, or positive relative to the basic shaft size.

BASIC SHAFTS	LETTER SYMBOLS AND GRADE NUMBERS OF HOLES																
	CLEARANCE FITS						TRANSITION FITS				INTERFERENCE FITS						
	B	C	D	E	F	G	H	Js	K	M	N	P	R	S	T	U	X
h4							5	5	5	5							
h5							6	6	6	6	6*	6					
h6					6	6	6	6	6	6	6	6*					
				7	7	7	7	7	7	7	7	7*	7	7	7	7	7
h7				7	7	7	7	7	7	7	7	7	7*	7			
					8		8										
h8			8	8	8		8										
			9	9			9										
h9			8	8			8										
		9	9	9			9										
	10	10	10														

*Exceptions occur in some steps of dimensions.

Tables for Determining Metric Tolerances

Table 4: IT Standard Tolerances

Table 4 details the ISO-basic tolerances (International Tolerance Grades, or, "IT") which apply to all linear sizes (external and internal sizes, diameters, lengths, widths and thicknesses). An IT-grade number establishes the magnitude of the tolerance zone, while the tolerance position letter determines where the tolerance zone is in relation to the zero line. The combination of tolerance position letter (A-X, a-x) and IT-grade number (01-8) creates the overall tolerance symbol (i.e., F8/h7 when using the shaft-basis system of fits).

For nominal size range up to 500mm according to DIN 7151/ISO 286, and for nominal size range over 500mm, according to DIN 7172/ISO 286.

	ITEMS IN mm		IT STANDARD TOLERANCES (UNITS IN 0.001mm)																			
	OVER	TO	IT01	IT0	IT1	IT2	IT3	IT4	IT5	IT6	IT7	IT8	IT9	IT10	IT11	IT12	IT13	IT14	IT15	IT16	IT17	IT18
NOMINAL SIZE RANGE	0	3	0.3	0.5	0.8	1.2	2	3	4	6	10	14	25	40	60	100	140	250	400	600	—	—
	3	6	0.4	0.6	1	1.5	2.5	4	5	8	12	18	30	48	75	120	180	300	480	750	—	—
	6	10	0.4	0.6	1	1.5	2.5	4	6	9	15	22	36	58	90	150	220	360	580	900	1500	—
	10	18	0.5	0.8	1.2	2	3	5	8	11	18	27	43	70	110	180	270	430	700	1100	1800	2700
	18	30	0.6	1	1.5	2.5	4	6	9	13	21	33	52	84	130	210	330	520	840	1300	2100	3300
	30	50	0.6	1	1.5	2.5	4	7	11	16	25	39	62	100	160	250	390	620	1000	1600	2500	3900
	50	80	0.8	1.2	2	3	5	8	13	19	30	46	74	120	190	300	460	740	1200	1900	3000	4600
	80	120	1	1.5	2.5	4	6	10	15	22	35	54	87	140	220	350	540	870	1400	2200	3500	5400
	120	180	1.2	2	3.5	5	8	12	18	25	40	63	100	160	250	400	630	1000	1600	2500	4000	6300
	180	250	2	3	4.5	7	10	14	20	29	46	72	115	185	290	460	720	1150	1850	2900	4600	7200
	250	315	2.5	4	6	8	12	16	23	32	52	81	130	210	320	520	810	1300	2100	3200	5200	8100
	315	400	3	5	7	9	13	18	25	36	57	89	140	230	360	570	890	1400	2300	3600	5700	8900
	400	500	4	6	8	10	15	20	27	40	63	97	155	250	400	630	970	1550	2500	4000	6300	9700
	500	630	4.5	6	9	11	16	22	30	44	70	110	175	280	440	700	1100	1750	2800	4400	—	—
	630	800	5	7	10	13	18	25	35	50	80	125	200	320	500	800	1250	2000	3200	5000	—	—
	800	1000	5.5	8	11	15	21	29	40	56	90	140	230	360	560	900	1400	2300	3600	5600	—	—

Tables for Determining Metric Tolerances

Table 5: Fundamental Deviations of Holes and Shafts

Table 5 details fundamental deviations between holes and shafts, and is provided for reference.

HOLES																
GRADE		IT6 TO IT16														
DIVISIONS		FUNDAMENTAL DEVIATIONS (LOWER DEVIATIONS)						FUNDAMENTAL DEVIATIONS (UPPER DEVIATIONS)							
LETTER SYMBOLS		D	E	F	G	H	Js	K	M	N	P	R	S	T	U
SIGNS		+	+	+	+				–	–	–	–	–	–	–
ABOVE	UP TO														
500	560	260	145	76	22	0	DEVIATIONS (+/–) IT/2	0	26	44	78	150	280	400	600
560	630											155	310	450	660
630	710	290	160	80	24	0		0	30	50	88	175	340	500	740
710	800											185	380	560	840
800	900	320	170	86	26	0		0	34	56	100	210	430	620	940
900	1000											220	470	680	1050
1000	1120	350	195	98	28	0		0	40	66	120	250	520	780	1150
1120	1250											260	580	840	1300
1250	1400	390	220	110	30	0		0	48	78	140	300	640	960	1450
1400	1600											330	720	1050	1600
1600	1800	430	240	120	32	0		0	58	92	170	370	820	1200	1850
1800	2000											400	920	1350	2000
2000	2240	480	260	130	34	0		0	68	110	195	440	1000	1500	2300
2240	2500											460	1100	1650	2500
2500	2800	520	290	145	38	0		0	76	135	240	550	1250	1900	2900
2800	3150											580	1400	2100	3200
ABOVE	UP TO														
SHAFTS															
SIGNS		–	–	–	–				+	+	+	+	+	+	+
LETTER SYMBOLS		d	e	f	g	h	js	k	m	n	p	r	s	t	u
DIVISIONS		FUNDAMENTAL DEVIATIONS (UPPER DEVIATIONS)						FUNDAMENTAL DEVIATIONS (LOWER DEVIATIONS)							
GRADE		IT6 TO IT16													

Tables for Determining Metric Tolerances

Table 6: Tolerances for Inside Dimensions (Holes)

Table 6 details tolerances for inside dimensions (holes) based relative to the tolerance symbol. Upper and lower values are provided as either positive or negative (or zero) values relative to the nominal size chosen. Pick the range in which the desired nominal value falls, and then either add or subtract the tolerances to find the upper and lower tolerance range for the desired nominal size.

	UNITS IN mm		TOLERANCES FOR INSIDE DIMENSIONS (HOLES) (UNITS IN 0.001mm)																			
	OVER	TO	A11	B8	B11	C11	D9	D10	D11	E8	E9	F6	F7	F8	G6	G7	H5	H6	H7	H8	H9	H10
NOMINAL SIZE RANGE	0	1	—	—	—	+120	+45	+60	+80	+28	+39	+12	+16	+20	+8	+12	+4	+6	+10	+14	+25	+40
			—	—	—	+60	+20	+20	+20	+14	+14	+6	+6	+6	+2	+2	0	0	0	0	0	0
	1	3	+330	+154	+200																	
			+270	+140	+140																	
	3	6	+345	+158	+215	+145	+60	+78	+105	+38	+50	+18	+22	+28	+12	+16	+5	+8	+12	+18	+30	+48
			+270	+140	+140	+70	+30	+30	+30	+20	+20	+10	+10	+10	+4	+4	0	0	0	0	0	0
	6	10	+370	+172	+240	+170	+76	+98	+130	+47	+61	+22	+28	+35	+14	+20	+6	+9	+15	+22	+36	+58
			+280	+150	+150	+80	+40	+40	+40	+25	+25	+13	+13	+13	+5	+5	0	0	0	0	0	0
	10	14	+400	+177	+260	+205	+93	+120	+160	+59	+75	+27	+34	+43	+17	+24	+8	+11	+18	+27	+43	+70
			+290	+150	+150	+95	+50	+50	+50	+32	+32	+16	+16	+16	+6	+6	0	0	0	0	0	0
	14	18																				
	18	24	+430	+193	+290	+240	+117	+149	+195	+73	+92	+33	+41	+53	+20	+28	+9	+13	+21	+33	+52	+84
			+300	+160	+160	+110	+65	+65	+65	+40	+40	+20	+20	+20	+7	+7	0	0	0	0	0	0
	24	30																				
	30	40	+470	+209	+330	+280	+142	+180	+240	+89	+112	+41	+50	+64	+25	+34	+11	+16	+25	+39	+62	+100
			+310	+170	+170	+120	+80	+80	+80	+50	+50	+25	+25	+25	+9	+9	0	0	0	0	0	0
	40	50	+480	+219	+340	+290																
			+320	+180	+180	+130																
	50	65	+530	+236	+380	+330	+174	+220	+290	+106	+134	+49	+60	+76	+29	+40	+13	+19	+30	+46	+74	+120
			+340	+190	+190	+140	+100	+100	+100	+60	+60	+30	+30	+30	+10	+10	0	0	0	0	0	0
	65	80	+550	+246	+390	+340																
			+360	+200	+200	+150																
	80	100	+600	+274	+440	+390	+207	+260	+340	+126	+159	+58	+71	+90	+34	+47	+15	+22	+35	+54	+87	+140
			+380	+220	+220	+170	+120	+120	+120	+72	+72	+36	+36	+36	+12	+12	0	0	0	0	0	0
	100	120	+630	+294	+460	+400																
			+410	+240	+240	+180																
	120	140	+710	+323	+510	+450	+245	+305	+395	+148	+185	+68	+83	+106	+39	+54	+18	+25	+40	+63	+100	+160
			+460	+260	+260	+200	+145	+145	+145	+85	+85	+43	+43	+43	+14	+14	0	0	0	0	0	0
	140	160	+770	+343	+530	+460																
			+520	+280	+280	+210																
	160	180	+830	+373	+560	+480																
			+580	+310	+310	+230																
	180	200	+950	+412	+630	+530	+285	+355	+460	+172	+215	+79	+96	+122	+44	+61	+20	+29	+46	+72	+115	+185
			+660	+340	+340	+240	+170	+170	+170	+100	+100	+50	+50	+50	+15	+15	0	0	0	0	0	0
	200	225	+1030	+452	+670	+550																
			+740	+380	+380	+260																
	225	250	+1110	+492	+710	+570																
			+820	+420	+420	+280																
	250	280	+1240	+561	+800	+620	+320	+400	+510	+191	+240	+88	+108	+137	+49	+69	+23	+32	+52	+81	+130	+210
			+920	+480	+480	+300	+190	+190	+190	+110	+110	+56	+56	+56	+17	+17	0	0	0	0	0	0
	280	315	+1370	+621	+860	+650																
			+1050	+540	+540	+330																
	315	355	+1560	+689	+960	+720	+350	+440	+570	+214	+265	+98	+119	+151	+54	+75	+25	+36	+57	+89	+140	+230
			+1200	+600	+600	+360	+210	+210	+210	+125	+125	+62	+62	+62	+18	+18	0	0	0	0	0	0
	355	400	+1710	+769	+1040	+760																
			+1350	+680	+680	+400																
	400	450	+1900	+857	+1160	+840	+385	+480	+630	+232	+290	+108	+131	+165	+60	+83	+27	+40	+63	+97	+155	+250
			+1500	+760	+760	+440	+230	+230	+230	+135	+135	+68	+68	+68	+20	+20	0	0	0	0	0	0
	450	500	+2050	+937	+1240	+880																
			+1650	+840	+840	+480																

Tables for Determining Metric Tolerances

Table 6: Tolerances for Inside Dimensions (Holes) – continued

UNITS IN mm		TOLERANCES FOR INSIDE DIMENSIONS (HOLES) (UNITS IN 0.001mm)																			
OVER	TO	H11	H12	H13	J6	J7	J8	K6	K7	K8	M6	M7	M8	N6	N7	N8	R7	JS6	JS7	JS8	JS9
0	1	+60 0	+100 0	+140 0	+2 -4	+4 -6	+6 -8	0 -6	0 -10	0 -14	-2 -8	-2 -12	-2 -16	-4 -10	-4 -14	-4 -18	-10 -20	+3 -3	+5 -5	+7 -7	+12.5 -12.5
1	3																				
3	6	+75 0	+120 0	+180 0	+5 -3	+6 -6	+10 -8	+2 -6	+3 -9	+5 -13	-1 -9	0 -12	+2 -16	-5 -13	-4 -16	-2 -20	-11 -23	+4 -4	+6 -6	+9 -9	+15 -15
6	10	+90 0	+150 0	+220 0	+5 -4	+8 -7	+12 -10	+2 -7	+5 -10	+6 -16	-3 -12	0 -15	+1 -21	-7 -16	-4 -19	-3 -25	-13 -28	+4.5 -4.5	+7.5 -7.5	+11 -11	+18 -18
10	14	+110 0	+180 0	+270 0	+6 -5	+10 -8	+15 -12	+2 -9	+6 -12	+8 -19	-4 -15	0 -18	+2 -25	-9 -20	-5 -23	-3 -30	-16 -34	+5.5 -5.5	+9 -9	+13.5 -13.5	+21.5 -21.5
14	18																				
18	24	+130 0	+210 0	+330 0	+8 -5	+12 -9	+20 -13	+2 -11	+6 -15	+10 -23	-4 -17	0 -21	+4 -29	-11 -24	-7 -28	-3 -36	-20 -41	+6.5 -6.5	+10.5 -10.5	+16.5 -16.5	+26 -26
24	30																				
30	40	+160 0	+250 0	+390 0	+10 -6	+14 -11	+24 -15	+3 -13	+7 -18	+12 -27	-4 -20	0 -25	+5 -34	-12 -28	-8 -33	-3 -42	-25 -50	+8 -8	+12.5 -12.5	+19.5 -19.5	+31 -31
40	50																				
50	65	+190 0	+300 0	+460 0	+13 -6	+18 -12	+28 -18	+4 -15	+9 -21	+14 -32	-5 -24	0 -30	+5 -41	-14 -33	-9 -39	-4 -50	-30 -60	+9.5 -9.5	+15 -15	+23 -23	+37 -37
65	80																-32 -62				
80	100	+220 0	+350 0	+540 0	+16 -6	+22 -13	+34 -20	+4 -18	+10 -25	+16 -38	-6 -28	0 -35	+6 -48	-16 -38	-10 -45	-4 -58	-38 -73	+11 -11	+17.5 -17.5	+27 -27	+43.5 -43.5
100	120																-41 -76				
120	140	+250 0	+400 0	+630 0	+18 -7	+26 -14	+41 -22	+4 -21	+12 -28	+20 -43	-8 -33	0 -40	+8 -55	-20 -45	-12 -52	-4 -67	-48 -88	+12.5 -12.5	+20 -20	+31.5 -31.5	+50 -50
140	160																-50 -90				
160	180																-53 -93				
180	200	+290 0	+460 0	+720 0	+22 -7	+30 -16	+47 -25	+5 -24	+13 -33	+22 -50	-8 -37	0 -46	+9 -63	-22 -51	-14 -60	-5 -77	-60 -106	+14.5 -14.5	+23 -23	+36 -36	+57.5 -57.5
200	225																-63 -109				
225	250																-67 -113				
250	280	+320 0	+520 0	+810 0	+25 -7	+36 -16	+55 -26	+5 -27	+16 -36	+25 -56	-9 -41	0 -52	+9 -72	-25 -57	-14 -66	-5 -86	-74 -126	+16 -16	+26 -26	+40.5 -40.5	+65 -65
280	315																-78 -130				
315	355	+360 0	+570 0	+890 0	+29 -7	+39 -18	+60 -29	+7 -29	+17 -40	+28 -61	-10 -46	0 -57	+11 -78	-26 -62	-16 -73	-5 -94	-87 -144	+18 -18	+28.5 -28.5	+44.5 -44.5	+70 -70
355	400																-93 -150				
400	450	+400 0	+630 0	+970 0	+33 -7	+43 -20	+66 -31	+8 -32	+18 -45	+29 -68	-10 -50	0 -63	+11 -86	-27 -67	-17 -80	-6 -103	-103 -166	+20 -20	+31.5 -31.5	+48.5 -48.5	+77.5 -77.5
450	500																-109 -172				

NOMINAL SIZE RANGE

Tables for Determining Metric Tolerances

Table 6: Tolerances for Inside Dimensions (Holes) – continued

NOMINAL SIZE RANGE	UNITS IN mm		TOLERANCES FOR INSIDE DIMENSIONS (HOLES) (UNITS IN 0.001mm)								
	OVER	TO	JS10	JS11	JS12	JS13	JS14	JS15	JS16	JS17	JS18
	0	1	+20 -20	+30 -30	+50 -50	+70 -70	+125 -125	+200 -200	+300 -300	— —	— —
	1	3									
	3	6	+24 -24	+37.5 -37.5	+60 -60	+90 -90	+150 -150	+240 -240	+375 -375	— —	— —
	6	10	+29 -29	+45 -45	+75 -75	+110 -110	+180 -180	+290 -290	+450 -450	+750 -750	— —
	10	14	+35 -35	+55 -55	+90 -90	+135 -135	+215 -215	+350 -350	+550 -550	+900 -900	+1350 -1350
	14	18									
	18	24	+42 -42	+65 -65	+105 -105	+165 -165	+260 -260	+420 -420	+650 -650	+1050 -1050	+1650 -1650
	24	30									
	30	40	+50 -50	+80 -80	+125 -125	+195 -195	+310 -310	+500 -500	+800 -800	+1250 -1250	+1950 -1950
	40	50									
	50	65	+60 -60	+95 -95	+150 -150	+230 -230	+370 -370	+600 -600	+950 -950	+1500 -1500	+2300 -2300
	65	80									
	80	100	+70 -70	+110 -110	+175 -175	+270 -270	+435 -435	+700 -700	+1100 -1100	+1750 -1750	+2700 -2700
	100	120									
	120	140	+80 -80	+125 -125	+200 -200	+315 -315	+500 -500	+800 -800	+1250 -1250	+2000 -2000	+3150 -3150
	140	160									
	160	180									
	180	200	+92.5 -92.5	+145 -145	+230 -230	+360 -360	+575 -575	+925 -925	+1450 -1450	+2300 -2300	+3600 -3600
	200	225									
	225	250									
	250	280	+105 -105	+160 -160	+260 -260	+405 -405	+650 -650	+1050 -1050	+1600 -1600	+2600 -2600	+4050 -4050
	280	315									
	315	355	+115 -115	+180 -180	+285 -285	+445 -445	+700 -700	+1150 -1150	+1800 -1800	+2850 -2850	+4450 -4450
	355	400									
	400	450	+125 -125	+200 -200	+315 -315	+485 -485	+775 -775	+1250 -1250	+2000 -2000	+3150 -3150	+4850 -4850
	450	500									

Tables for Determining Metric Tolerances

Table 7: Tolerances for Outside Dimensions (Shafts)

Table 7 details tolerances for outside dimensions (shafts) based relative to the tolerance symbol. Upper and lower values are provided as either positive or negative (or zero) values relative to the nominal size chosen. Pick the range in which the desired nominal value falls, and then either add or subtract the tolerances to find the upper and lower tolerance range for the desired nominal size.

	UNITS IN mm		TOLERANCES FOR OUTSIDE DIMENSIONS (SHAFTS) (UNITS IN 0.001mm)																				
	OVER	TO	a11	b8	b11	c11	d9	d10	d11	e7	e8	e9	f6	f7	f8	f9	g5	g6	g7	h4	h5	h6	h7
NOMINAL SIZE RANGE	0	1	— —	— —	— —	-60 -120	-20 -45	-20 -60	-20 -80	-14 -24	-14 -28	-14 -39	-6 -12	-6 -16	-6 -20	-6 -31	-2 -6	-2 -8	-2 -12	0 -3	0 -4	0 -6	0 -10
	1	3	-270 -330	-140 -154	-140 -200																		
	3	6	-270 -345	-140 -158	-140 -215	-70 -145	-30 -60	-30 -78	-30 -105	-20 -32	-20 -38	-20 -50	-10 -18	-10 -22	-10 -28	-10 -40	-4 -9	-4 -12	-4 -16	0 -4	0 -5	0 -8	0 -12
	6	10	-280 -370	-150 -172	-150 -240	-80 -170	-40 -76	-40 -98	-40 -130	-25 -40	-25 -47	-25 -61	-13 -22	-13 -28	-13 -35	-13 -49	-5 -11	-5 -14	-5 -20	0 -4	0 -6	0 -9	0 -15
	10	14	-290 -400	-150 -177	-150 -260	-95 -205	-50 -93	-50 -120	-50 -160	-32 -50	-32 -59	-32 -75	-16 -27	-16 -34	-16 -43	-16 -59	-6 -14	-6 -17	-6 -24	0 -5	0 -8	0 -11	0 -18
	14	18																					
	18	24	-300 -430	-160 -193	-160 -290	-110 -240	-65 -117	-65 -149	-65 -195	-40 -61	-40 -73	-40 -92	-20 -33	-20 -41	-20 -53	-20 -72	-7 -16	-7 -20	-7 -28	0 -6	0 -9	0 -13	0 -21
	24	30																					
	30	40	-310 -470	-170 -209	-170 -330	-120 -280	-80 -142	-80 -180	-80 -240	-50 -75	-50 -89	-50 -112	-25 -41	-25 -50	-25 -64	-25 -87	-9 -20	-9 -25	-9 -34	0 -7	0 -11	0 -16	0 -25
	40	50	-320 -480	-180 -219	-180 -340	-130 -290																	
	50	65	-340 -530	-190 -236	-190 -380	-140 -330	-100 -174	-100 -220	-100 -290	-60 -90	-60 -106	-60 -134	-30 -49	-30 -60	-30 -76	-30 -104	-10 -23	-10 -29	-10 -40	0 -8	0 -13	0 -19	0 -30
	65	80	-360 -550	-200 -246	-200 -390	-150 -340																	
	80	100	-380 -600	-220 -274	-220 -440	-170 -390	-120 -207	-120 -260	-120 -340	-72 -107	-72 -126	-72 -159	-36 -58	-36 -71	-36 -90	-36 -123	-12 -27	-12 -34	-12 -47	0 -10	0 -15	0 -22	0 -35
	100	120	-410 -630	-240 -294	-240 -460	-180 -400																	
	120	140	-460 -710	-260 -323	-260 -510	-200 -450	-145 -245	-145 -305	-145 -395	-85 -125	-85 -148	-85 -185	-43 -68	-43 -83	-43 -106	-43 -143	-14 -32	-14 -39	-14 -54	0 -12	0 -18	0 -25	0 -40
	140	160	-520 -770	-280 -343	-280 -530	-210 -460																	
	160	180	-580 -830	-310 -373	-310 -560	-230 -480																	
	180	200	-660 -950	-340 -412	-340 -630	-240 -530	-170 -285	-170 -355	-170 -460	-100 -146	-100 -172	-100 -215	-50 -79	-50 -96	-50 -122	-50 -165	-15 -35	-15 -44	-15 -61	0 -14	0 -20	0 -29	0 -46
	200	225	-740 -1030	-380 -452	-380 -670	-260 -550																	
	225	250	-820 -1110	-420 -492	-420 -710	-280 -570																	
	250	280	-920 -1240	-480 -561	-480 -800	-300 -620	-190 -320	-190 -400	-190 -510	-110 -162	-110 -191	-110 -240	-56 -88	-56 -108	-56 -137	-56 -186	-17 -40	-17 -49	-17 -69	0 -16	0 -23	0 -32	0 -52
	280	315	-1050 -1370	-540 -621	-540 -860	-330 -650																	
	315	355	-1200 -1560	-600 -689	-600 -960	-360 -720	-210 -350	-210 -440	-210 -570	-125 -182	-125 -214	-125 -265	-62 -98	-62 -119	-62 -151	-62 -202	-18 -43	-18 -54	-18 -75	0 -18	0 -25	0 -36	0 -57
	355	400	-1350 -1710	-680 -769	-680 -1040	-400 -760																	
	400	450	-1500 -1900	-760 -857	-760 -1160	-440 -840	-230 -385	-230 -480	-230 -630	-135 -198	-135 -232	-135 -290	-68 -108	-68 -131	-68 -165	-68 -223	-20 -47	-20 -60	-20 -83	0 -20	0 -27	0 -40	0 -63
	450	500	-1650 -2050	-840 -937	-840 -1240	-480 -880																	

Tables for Determining Metric Tolerances

Table 7: Tolerances for Outside Dimensions (Shafts) – continued

UNITS IN mm		TOLERANCES FOR OUTSIDE DIMENSIONS (SHAFTS) (UNITS IN 0.001mm)																			
OVER	TO	h8	h9	h10	h11	j5	j6	j7	k5	k6	k7	k8	m5	m6	m7	n5	n6	n7	r6	js6	js7
0	1	0 -14	0 -25	0 -40	0 -60	+2 -2	+4 -2	+6 -4	+4 0	+6 0	+10 0	+14 0	+6 +2	+8 +2	+12 +2	+8 +4	+10 +4	+14 +4	+16 +10	+3 -3	+5 -5
1	3																				
3	6	0 -18	0 -30	0 -48	0 -75	+3 -2	+6 -2	+8 -4	+6 +1	+9 +1	+13 +1	+18 0	+9 +4	+12 +4	+16 +4	+13 +8	+16 +8	+20 +8	+23 +15	+4 -4	+6 -6
6	10	0 -22	0 -36	0 -58	0 -90	+4 -2	+7 -2	+10 -5	+7 +1	+10 +1	+16 +1	+22 0	+12 +6	+15 +6	+21 +6	+16 +10	+19 +10	+25 +10	+28 +19	+4.5 -4.5	+7.5 -7.5
10	14	0 -27	0 -43	0 -70	0 -110	+5 -3	+8 -3	+12 -6	+9 +1	+12 +1	+19 +1	+27 0	+15 +7	+18 +7	+25 +7	+20 +12	+23 +12	+30 +12	+34 +23	+5.5 -5.5	+9 -9
14	18																				
18	24	0 -33	0 -52	0 -84	0 -130	+5 -4	+9 -4	+13 -8	+11 +2	+15 +2	+23 +2	+33 0	+17 +8	+21 +8	+29 +8	+24 +15	+28 +15	+36 +15	+41 +28	+6.5 -6.5	+10.5 -10.5
24	30																				
30	40	0 -39	0 -62	0 -100	0 -160	+6 -5	+11 -5	+15 -10	+13 +2	+18 +2	+27 +2	+39 0	+20 +9	+25 +9	+34 +9	+28 +17	+33 +17	+42 +17	+50 +34	+8 -8	+12.5 -12.5
40	50																				
50	65	0 -46	0 -74	0 -120	0 -190	+6 -7	+12 -7	+18 -12	+15 +2	+21 +2	+32 +2	+46 0	+24 +11	+30 +11	+41 +11	+33 +20	+39 +20	+50 +20	+60 +41	+9.5 -9.5	+15 -15
65	80																		+62 +43		
80	100	0 -54	0 -87	0 -140	0 -220	+6 -9	+13 -9	+20 -15	+18 +3	+25 +3	+38 +3	+54 0	+28 +13	+35 +13	+48 +13	+38 +23	+45 +23	+58 +23	+73 +51	+11 -11	+17.5 -17.5
100	120																		+76 +54		
120	140	0 -63	0 -100	0 -160	0 -250	+7 -11	+14 -11	+22 -18	+21 +3	+28 +3	+43 +3	+63 0	+33 +15	+40 +15	+55 +15	+45 +27	+52 +27	+67 +27	+88 +63	+12.5 -12.5	+20 -20
140	160																		+90 +65		
160	180																		+93 +68		
180	200	0 -72	0 -115	0 -185	0 -290	+7 -13	+16 -13	+25 -21	+24 +4	+33 +4	+50 +4	+72 0	+37 +17	+46 +17	+63 +17	+51 +31	+60 +31	+77 +31	+106 +77	+14.5 -14.5	+23 -23
200	225																		+109 +80		
225	250																		+113 +84		
250	280	0 -81	0 -130	0 -210	0 -320	+7 -16	+16 -16	+26 -26	+27 +4	+36 +4	+56 +4	+81 0	+43 +20	+52 +20	+72 +20	+57 +34	+66 +34	+86 +34	+126 +94	+16 -16	+26 -26
280	315																		+130 +98		
315	355	0 -89	0 -140	0 -230	0 -360	+7 -18	+18 -18	+29 -28	+29 +4	+40 +4	+61 +4	+89 0	+46 +21	+57 +21	+78 +21	+62 +37	+73 +37	+94 +37	+144 +108	+18 -18	+28.5 -28.5
355	400																		+150 +114		
400	450	0 -97	0 -155	0 -250	0 -400	+7 -20	+20 -20	+31 -32	+32 +5	+45 +5	+68 +5	+97 0	+50 +23	+63 +23	+86 +23	+67 +40	+80 +40	+103 +40	+166 +126	+20 -20	+31.5 -31.5
450	500																		+172 +132		

NOMINAL SIZE RANGE

Tables for Determining Metric Tolerances

Table 7: Tolerances for Outside Dimensions (Shafts) – continued

NOMINAL SIZE RANGE		TOLERANCES FOR OUTSIDE DIMENSIONS (SHAFTS) (UNITS IN 0.001mm)										
UNITS IN mm												
OVER	TO	js8	js9	js10	js11	js12	js13	js14	js15	js16	js17	js18
0	1	+7 -7	+12.5 -12.5	+20 -20	+30 -30	+50 -50	+70 -70	+125 -125	+200 -200	+300 -300	— —	— —
1	3											
3	6	+9 -9	+15 -15	+24 -24	+37.5 -37.5	+60 -60	+90 -90	+150 -150	+240 -240	+375 -375	— —	— —
6	10	+11 -11	+18 -18	+29 -29	+45 -45	+75 -75	+110 -110	+180 -180	+290 -290	+450 -450	+750 -750	— —
10	14	+13.5 -13.5	+21.5 -21.5	+35 -35	+55 -55	+90 -90	+135 -135	+215 -215	+350 -350	+550 -550	+900 -900	+1350 -1350
14	18											
18	24	+16.5 -16.5	+26 -26	+42 -42	+65 -65	+105 -105	+165 -165	+260 -260	+420 -420	+650 -650	+1050 -1050	+1650 -1650
24	30											
30	40	+19.5 -19.5	+31 -31	+50 -50	+80 -80	+125 -125	+195 -195	+310 -310	+500 -500	+800 -800	+1250 -1250	+1950 -1950
40	50											
50	65	+23 -23	+37 -37	+60 -60	+95 -95	+150 -150	+230 -230	+370 -370	+600 -600	+950 -950	+1500 -1500	+2300 -2300
65	80											
80	100	+27 -27	+43.5 -43.5	+70 -70	+110 -110	+175 -175	+270 -270	+435 -435	+700 -700	+1100 -1100	+1750 -1750	+2700 -2700
100	120											
120	140	+31.5 -31.5	+50 -50	+80 -80	+125 -125	+200 -200	+315 -315	+500 -500	+800 -800	+1250 -1250	+2000 -2000	+3150 -3150
140	160											
160	180											
180	200	+36 -36	+57.5 -57.5	+92.5 -92.5	+145 -145	+230 -230	+360 -360	+575 -575	+925 -925	+1450 -1450	+2300 -2300	+3600 -3600
200	225											
225	250											
250	280	+40.5 -40.5	+65 -65	+105 -105	+160 -160	+260 -260	+405 -405	+650 -650	+1050 -1050	+1600 -1600	+2600 -2600	+4050 -4050
280	315											
315	355	+44.5 -44.5	+70 -70	+115 -115	+180 -180	+285 -285	+445 -445	+700 -700	+1150 -1150	+1800 -1800	+2850 -2850	+4450 -4450
355	400											
400	450	+48.5 -48.5	+77.5 -77.5	+125 -125	+200 -200	+315 -315	+485 -485	+775 -775	+1250 -1250	+2000 -2000	+3150 -3150	+4850 -4850
450	500											

Tables for Determining Metric Tolerances

Table 8: Tolerances for Inside Dimensions (Holes)

Table 8 details tolerances for inside dimensions (holes) based relative to the tolerance symbol. This table works the same way as Table 6, but is pulled from a different source (ANSI standards) and details S7 and U7 fits. Pick the nominal size value that is **closest** to the desired nominal size to determine the required tolerance range relative to the chosen tolerance symbol.

HOLE BASIS FIT		[mm]	Hole:			
Example:	Nominal size:	60	[mm]			
	Size range to be used:	50 to 65		H7	+0.030	(0.030mm range)
	ISO-Grade No.:	IT7 (hole), IT6 (shaft)	60		-0	
	Tolerance Symbol:	H7/k6	Shaft:			
	Desired Fit:	Locational Transition Fit	[mm]			
This Gives:	Allowance for hole:	0.030mm		k6	+0.021	(0.019mm range)
	Allowance for shaft:	0.019mm	60		+0.002	

NOMINAL SIZE RANGE	TOLERANCES FOR INSIDE DIMENSIONS (HOLES) (UNITS IN 0.001mm)					
	PICK CLOSEST VALUE TO DESIRED DIMENSION (UNITS IN mm)	S7	U7	PICK CLOSEST VALUE TO DESIRED DIMENSION (UNITS IN mm)	S7	U7
	1	-14 -24	-18 -28	25	-27 -48	-40 -61
	1.2	-14 -24	-18 -28	30	-27 -48	-40 -61
	1.6	-14 -24	-18 -28	40	-34 -59	-51 -76
	2	-14 -24	-18 -28	50	-34 -59	-61 -86
	2.5	-14 -24	-18 -28	60	-42 -72	-76 -106
	3	-14 -24	-18 -28	80	-48 -78	-91 -121
	4	-15 -27	-19 -31	100	-58 -93	-111 -146
	5	-15 -27	-19 -31	120	-66 -101	-131 -166
	6	-15 -27	-19 -31	160	-85 -125	-175 -215
	8	-17 -32	-22 -37	200	-105 -151	-219 -265
	10	-17 -32	-22 -37	250	-123 -169	-267 -313
	12	-21 -39	-26 -44	300	-150 -202	-330 -382
	16	-21 -39	-26 -44	400	-187 -244	-414 -471
	20	-27 -48	-33 -54	500	-229 -292	-517 -580

Tables for Determining Metric Tolerances

Table 9: Tolerances for Outside Dimensions (Shafts)

Table 9 details tolerances for outside dimensions (shafts) based relative to the tolerance symbol. This table works the same way as Table 7, but is pulled from a different source (ANSI standards) and details s6 and u6 fits. Pick the nominal size value that is **closest** to the desired nominal size to determine the required tolerance range relative to the chosen tolerance symbol.

HOLE BASIS FIT		[mm]	Hole:			
Example:	Nominal size:	24	[mm]			
	Size range to be used:	18 to 30		F6	+0.033	(0.013mm range)
	ISO-Grade No.:	IT6	24		+0.020	
	Tolerance Symbol:	F6/h6	Shaft:			
	Desired Fit:	Clearance Fit	[mm]			
This Gives:	Allowance for hole:	0.013mm		h6	0	(0.013mm range)
	Allowance for shaft:	0.013mm	24		-0.013	

NOMINAL SIZE RANGE	TOLERANCES FOR OUTSIDE DIMENSIONS (SHAFTS) (UNITS IN 0.001mm)					
	PICK CLOSEST VALUE TO DESIRED DIMENSION (UNITS IN mm)	s6	u6	PICK CLOSEST VALUE TO DESIRED DIMENSION (UNITS IN mm)	s6	u6
	1	+20 +14	+24 +18	25	+48 +35	+61 +48
	1.2	+20 +14	+24 +18	30	+48 +35	+61 +48
	1.6	+20 +14	+24 +18	40	+59 +43	+76 +60
	2	+20 +14	+24 +18	50	+59 +43	+86 +70
	2.5	+20 +14	+24 +18	60	+72 +53	+106 +87
	3	+20 +14	+24 +18	80	+78 +59	+121 +102
	4	+27 +19	+31 +23	100	+93 +71	+146 +124
	5	+27 +19	+31 +23	120	+101 +79	+166 +144
	6	+27 +19	+31 +23	160	+125 +100	+215 +190
	8	+32 +23	+37 +28	200	+151 +122	+265 +236
	10	+32 +23	+37 +28	250	+169 +140	+313 +284
	12	+39 +28	+44 +33	300	+202 +170	+382 +350
	16	+39 +28	+44 +33	400	+244 +208	+471 +435
	20	+48 +35	+54 +41	500	+292 +252	+580 +540

American Standard Mold Base Features

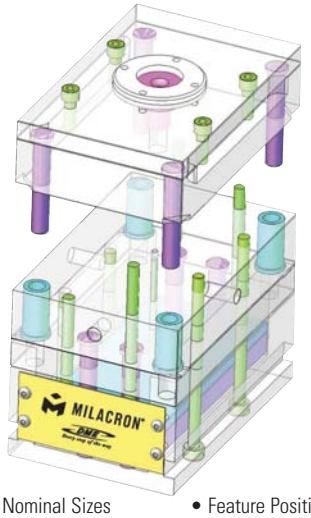

- 43 Nominal Sizes
- 9 Plate Thicknesses
- 4 Steel Types
- Guided Ejection
- Pry Slots
- Lifting Holes
- Leader Pin Vents
- Ejector Housing Cover
- Feature Positions
- Feature Omissions
- Three-Piece or Welded Housing Type
- Clamp Slot Type
- Mixed Steel
- Sprue Puller Pin Diameter
- Stop Pin Location

Pry Slots

Mold base features Pry Slots, installed in any plate specified, on the parting and/or non-parting line side. This provides handling ease when opening and/or disassembling a mold.

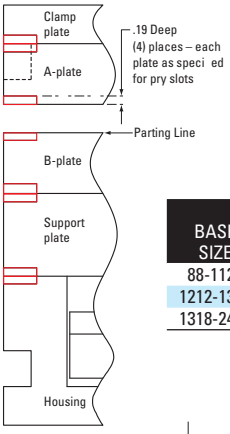

BASE SIZE	SLOT LENGTH Z
88-1123	.56 X 45°
1212-1315	.88 X 45°
1318-2435	1.00 X 45°

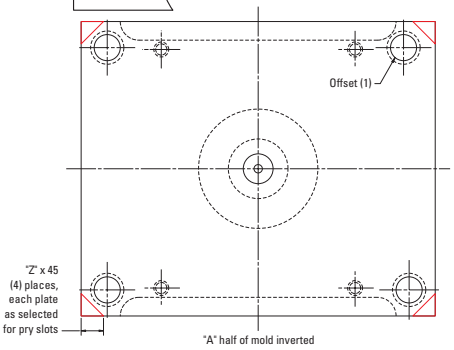

Return Pins and Stop Pins

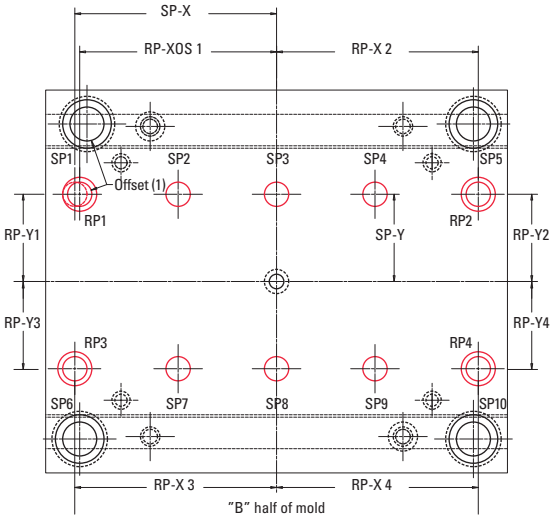

BASE SIZE	RP DIAMETER (RECOM'D)	RP-y SP-y	POSITION 1 RP-xos	POSITION 1 RP-x	POSITION 2 RP-xos	POSITION 2 RP-x	SP-x1 SP-x6	SP-x2 SP-x7	SP-x3 SP-x8	SP-x4 SP-x9	SP-x5 SP-x10
88	0.500	1.500	3.250	3.375	3.188	3.312	3.375				3.375
812	0.500	1.500	5.250	5.375	5.188	5.312	5.375		On Center		5.375
108	0.625	2.250	3.250	3.375	3.125	3.250	3.375				3.375
1012	0.625	2.250	5.188	5.312	5.063	5.188	5.312		On Center		5.312
1016	0.625	2.250	7.250	7.375	7.125	7.250	7.375	2.500		2.500	7.375
1020	0.625	2.250	9.250	9.375	9.125	9.250	9.375	3.125		3.125	9.375
1112	0.625	2.812	5.250	5.375	5.125	5.250	5.375		On Center		5.375
1114	0.625	2.812	6.250	6.375	6.125	6.250	6.375		On Center		6.375
1118	0.625	2.812	8.250	8.375	8.125	8.250	8.375		On Center		8.375
1123	0.625	2.812	11.000	11.125	10.875	11.000	11.125	3.750		3.750	11.125
1212	0.750	3.188	5.250	5.375	5.000	5.125	5.375		On Center		5.375
1215	0.750	3.188	6.750	6.875	6.500	6.625	6.875	2.250		2.250	6.875
1220	0.750	3.188	9.250	9.375	9.000	9.125	9.375	3.094		3.094	9.375
1223	0.750	3.188	11.000	11.125	10.750	10.875	11.125	3.750		3.750	11.125
1315	0.750	3.812	6.750	6.875	6.500	6.625	6.875	2.250		2.250	6.875
1318	0.750	3.812	8.250	8.375	8.000	8.125	8.375	2.750		2.750	8.375
1321	0.750	3.812	9.500	9.625	9.375	9.500	9.625	4.000		4.000	9.625
1323	0.750	3.812	10.875	11.000	10.750	10.875	11.000	4.000		4.000	11.000
1326	0.750	3.812	12.125	12.250	12.000	12.125	12.250	4.000		4.000	12.250
1329	0.750	3.812	13.875	14.000	13.750	13.875	14.000	5.000		5.000	14.000
1518	0.750	3.875	8.125	8.250	7.938	8.062	8.250	2.750		2.750	8.250
1524	0.750	3.875	11.000	11.125	10.875	11.000	11.125	3.750		3.750	11.125
1529	0.750	3.875	13.875	14.000	13.750	13.875	14.000	4.688		4.688	14.000
1616	0.750	4.375	7.125	7.250	7.000	7.125	7.250	2.375		2.375	7.250
1620	0.750	4.375	9.125	9.250	9.000	9.125	9.250	3.062		3.062	9.250
1623	0.750	4.375	10.875	11.000	10.750	10.875	11.000	4.000		4.000	11.000
1626	0.750	4.375	12.125	12.250	12.000	12.125	12.250	4.000		4.000	12.250
1629	0.750	4.375	13.875	14.000	13.750	13.875	14.000	4.688		4.688	14.000
1635	0.750	4.375	16.875	17.000	16.750	16.875	17.000	8.500	On Center	8.500	17.000
1724	0.750	4.625	11.000	11.125	10.875	11.000	11.125	3.750		3.750	11.125
1729	0.750	4.625	13.875	14.000	13.750	13.875	14.000	4.688		4.688	14.000
1818	0.750	5.375	8.125	8.250	8.000	8.125	8.250	2.750		2.750	8.250
1820	0.750	5.375	9.125	9.250	9.000	9.125	9.250	3.062		3.062	9.250
1823	0.750	5.375	10.875	11.000	10.750	10.875	11.000	4.000		4.000	11.000
1826	0.750	5.375	12.125	12.250	12.000	12.125	12.250	4.000		4.000	12.250
1829	0.750	5.375	13.875	14.000	13.750	13.875	14.000	4.688		4.688	14.000
1835	0.750	5.375	16.875	17.000	16.750	16.875	17.000	8.500	On Center	8.500	17.000
1924	0.750	6.125	11.000	11.125	10.875	11.000	11.125	3.750		3.750	11.125
1929	0.750	6.125	13.875	14.000	13.750	13.875	14.000	4.688		4.688	14.000
1935	0.750	6.125	16.875	17.000	16.750	16.875	17.000	8.500	On Center	8.500	17.000
2424	0.750	7.750	11.000	11.125	10.875	11.000	11.125	3.750		3.750	11.125
2429	0.750	7.750	13.875	14.000	13.750	13.875	14.000	4.688		4.688	14.000
2435	0.750	7.750	16.875	17.000	16.750	16.875	17.000	8.500	On Center	8.500	17.000

American Standard Mold Base Features

Leader Pins, Vents & Bushings

Leader Pins and Bushings align both halves of the mold at the parting line. Leader Pin Vents, which allow trapped air to escape from the mold, are designed into all 15-inch-and-wider series molds. When desired, they can be specified on smaller molds.

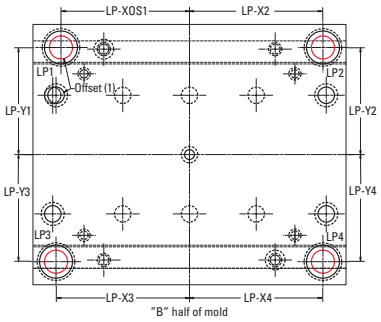

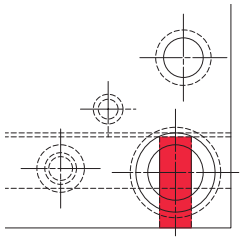

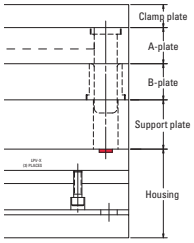

SIZE	DIA	LPxos	LPx	LPy
88	0.750	3.000	3.125	3.125
812	0.750	5.000	5.125	3.125
108	0.750	2.938	3.125	4.062
1012	0.875	4.875	5.062	4.062
1016	0.875	6.938	7.125	4.062
1020	0.875	8.938	9.125	4.062
1112	0.875	4.938	5.125	4.562
1114	0.875	5.938	6.125	4.562
1118	0.875	7.938	8.125	4.562
1123	0.875	10.688	10.875	4.562
1212	1.000	4.625	4.812	5.000
1215	1.000	6.125	6.312	5.000
1220	1.000	8.625	8.812	5.000
1223	1.000	10.375	10.562	5.000
1315	1.000	6.125	6.312	5.688
1318	1.000	7.375	7.562	5.688
1321	1.000	8.750	8.938	5.688
1323	1.000	10.125	10.312	5.688
1326	1.000	11.375	11.562	5.688
1329	1.000	13.125	13.312	5.688
1518	1.250	7.375	7.562	6.062
1524	1.250	10.250	10.438	6.062
1529	1.250	13.125	13.312	6.062
1616	1.250	6.375	6.562	6.562
1620	1.250	8.375	8.562	6.562
1623	1.250	10.125	10.312	6.562
1626	1.250	11.375	11.562	6.562
1629	1.250	13.125	13.312	6.562
1635	1.250	16.125	16.312	6.562
1724	1.250	10.250	10.438	6.812
1729	1.250	13.125	13.312	6.812
1818	1.250	7.375	7.562	7.562
1820	1.250	8.375	8.562	7.562
1823	1.250	10.125	10.312	7.562
1826	1.250	11.375	11.562	7.562
1829	1.250	13.125	13.312	7.562
1835	1.250	16.125	16.312	7.562
1924	1.250	10.250	10.438	8.312
1929	1.250	13.125	13.312	8.312
1935	1.250	16.125	16.312	8.312
2424	1.500	10.062	10.250	10.250
2429	1.500	12.938	13.125	10.250
2435	1.500	15.938	16.125	10.250

Ejector Housing & Cover

Ejector Housing Cover

For additional operator safety, SelectBase molds include an ejector housing cover, except when a longer length ejector bar is selected. The perforated DME logo helps the operator to visually determine if the ejector plate and ejector retainer plate are in the returned position. The cover is fastened on both sides with 5/16-18 button-head cap screws. Once again, DME is leading the industry into a safer work environment.

Ejector Housing

DME offers a selection of housing types to fit application demands. A one-piece welded housing is available for customers requiring maximum rigidity and robust durability. For maximum flexibility of configuration options, a three-piece housing is also available.

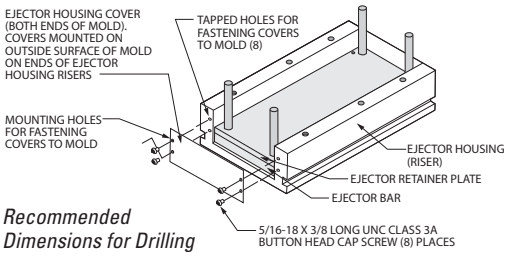

Recommended Dimensions for Drilling and Tapping

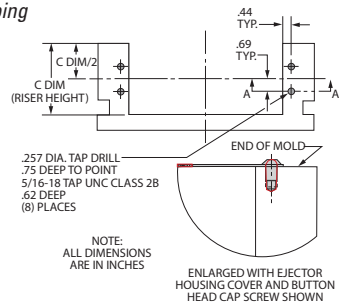

Clamp Slots

Type A

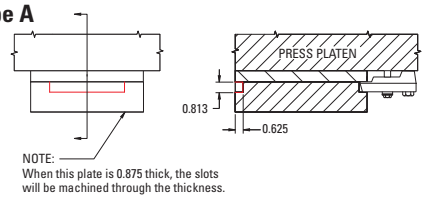

Type B

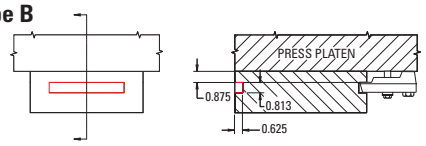

Type C

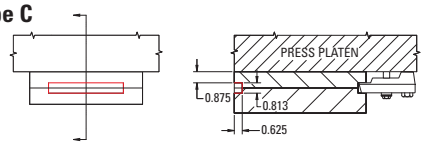

Type D

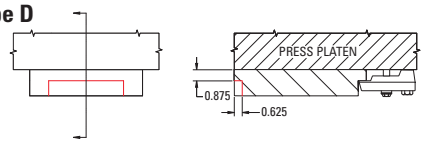

Lifting Holes

Lifting Hole Diameters

BASE SIZE	PLATE THICKNESS	
	0.875	1.375
88-1118	1/2-13 UNC	1/2-13 UNC
1123-1524	5/8-11 UNC	5/8-11 UNC
1529-1829	5/8-11 UNC	3/4-10 UNC
1835-2429	5/8-11 UNC	1"-8 UNC
2435	N/A	1"-8 UNC

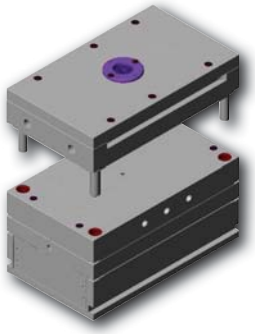

Lifting Holes

THREAD SIZE	S	T MAX.
1/2-13	1.00	1.38
5/8-11	1.25	1.75
3/4-10	1.50	2.00
1"-8	2.00	2.62

Lifting Holes can be used to install hoist rings for ease of handling. Mold base can be configured only with Lifting Holes which are appropriate for the specific mold base size. Refer to the DME catalog for a comprehensive selection of Hoist Rings.

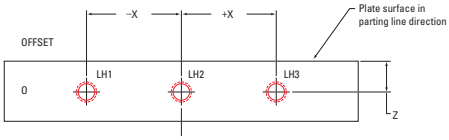

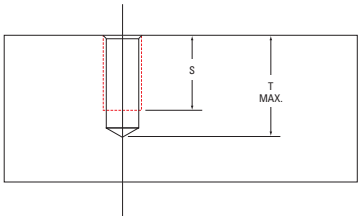

American Standard Mold Base Features

Guided Ejection Systems

Guided Ejection Systems hold the ejector assembly in alignment and support the weight of the ejector assembly throughout the molding cycle – greatly reducing wear on ejection components and preventing cocking of the ejector assembly.

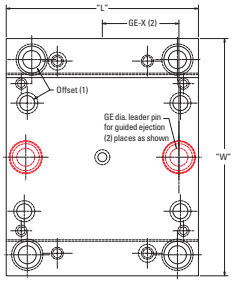

"B" HALF OF MOLD FOR 88, 812 & 108 MOLD BASE SIZE ONLY

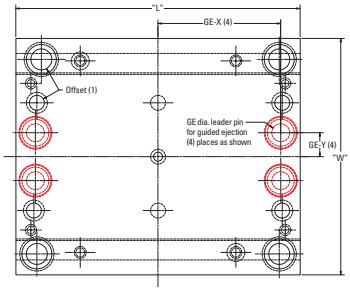

"B" HALF OF MOLD FOR 1012 – 2435 BASES

Guided Ejection Positions

PIN DIAMETER (RECOM'D)	BASE SIZE	GE X	GE Y
0.750	88	3.000	Center
	812	5.000	Center
	108	3.062	Center
	1012	5.000	1.000
	1016	7.062	1.000
	1020	9.062	1.000
	1112	5.062	1.625
	1114	6.062	1.625
	1118	8.062	1.625
	1123	10.812	1.625
0.875	212	5.000	1.750
	1215	6.500	1.750
	1220	9.000	1.750
	1223	10.750	1.750
	1315	6.500	2.375
	1318	8.000	2.375
	1321	9.375	2.375
	1323	10.750	2.375
	1326	12.000	2.375
	1329	13.750	2.375
1.000	1518	7.875	2.375
	1524	10.812	2.375
	1529	13.688	2.375
	1616	6.938	2.875
	1620	8.938	2.875
	1623	10.688	2.875
	1626	11.938	2.875
	1629	13.688	2.875
	1635	16.688	2.875
	1724	10.812	3.125
	1729	13.688	3.125
	1818	7.938	3.875
	1820	8.938	3.875
	1823	10.688	3.875
	1826	11.038	3.875
	1829	13.688	3.875
	1835	16.688	3.875
	1924	10.812	4.625
	1929	13.688	4.625
	1935	16.688	4.625
1.250	2424	10.688	6.125
	2429	13.562	6.125
	2435	16.562	6.125

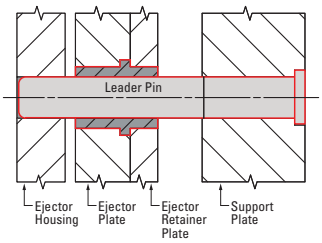

System 1

When pins are installed in the support plate, the ejector housing can be removed from the mold without removing ejector plates. This permits easy access to service the ejector system.

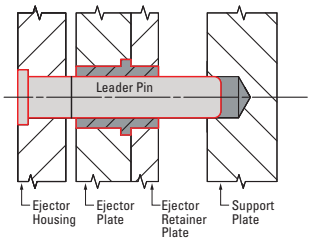

System 2

Pins installed in the ejector housing permit fast installation. When the ejector housing is removed from the mold base, the complete ejector assembly is removed.

Sizes & Thicknesses

43 Nominal Sizes

- The American Standard Mold Base is available in 43 nominal sizes to match the mold space requirements for your application.
- As the creator of the American mold base standard, DME has the largest selection of mold base sizes and most are available in less than five business days.

CODE	THICKNESS
7	0.875
13	1.375
17	1.875
23	2.375
27	2.875
33	3.375
37	3.875
47	4.875
57	5.875

9 Plate Thicknesses

- DME offers mold plates for all nominal sizes up to 5-7/8".
- Our own steel processing facility manufactures our mold plate directly from raw steel slabs.

NOMINAL SIZE	WIDTH (IN)	LENGTH (IN)	WEIGHT RANGE (LBS) MIN	MAX
88	7.875	7.875	116	305
812	7.875	11.875	175	460
108	9.875	8.000	156	393
1012	9.875	11.875	235	592
1016	9.875	16.000	316	798
1020	9.875	20.000	395	997
1112	10.875	12.000	261	659
1114	10.875	14.000	305	769
1118	10.875	18.000	392	988
1123	10.875	23.500	511	1290
1212	11.875	12.000	285	719
1215	11.875	15.000	379	899
1220	11.875	20.000	505	1199
1223	11.875	23.500	594	1409
1315	13.375	15.000	427	1038
1318	13.375	18.000	512	1246
1321	13.375	20.750	590	1436
1323	13.375	23.500	669	1627
1326	13.375	26.000	740	1800
1329	13.375	29.500	839	2042
1518	14.875	17.875	599	1410
1524	14.875	23.750	796	1873

NOMINAL SIZE	WIDTH (IN)	LENGTH (IN)	WEIGHT RANGE (LBS) MIN	MAX
1529	14.875	29.500	989	2327
1616	15.875	16.000	573	1347
1620	15.875	20.000	716	1683
1623	15.875	23.500	841	1978
1626	15.875	26.000	930	2189
1629	15.875	29.500	1056	2483
1635	15.875	35.500	1270	2988
1724	16.500	23.750	883	2078
1729	16.500	29.500	1097	2581
1818	17.875	18.000	725	1706
1820	17.875	20.000	806	1896
1823	17.875	23.500	947	2227
1826	17.875	26.000	1048	2464
1829	17.875	29.500	1189	2796
1835	17.875	35.500	1430	3365
1924	19.500	23.750	1044	2456
1929	19.500	29.500	1297	3050
1935	19.500	35.500	1648	3758
2424	23.750	23.750	1343	3062
2429	23.750	29.500	1668	3804
2435	23.750	35.500	2008	4578

Steels for Structural and Holder Block Applications

DME #1 Steel is a medium carbon quality steel with greater tensile strength than typical plain carbon warehouse steels. It machines easily, but is not "sticky", permitting a faster and smoother cut. International comparisons: DIN 1.1178 (CK 30) and 1.1730 (C 45 W); JIS S 30 CM, S50C, S55C; ISO 683-1 C30E4.

DME #2 Steel is a medium alloy steel specified for durability in structural applications. It is supplied pre-heat treated to 28-34 HRC (271-321 Bhn). A high strength steel, it is ideal for cavity and core retainer plates, clamping plates and support plates in molds. International comparisons: DIN 1.2312 (40CrMnMoS 8 6), 1.7218 (25CrMo4) and 1.2331 (41CrMoS4); JIS SCM 430; ISO 683-2 Type 1.

DME #7 Steel is a modified AISI 400 series stainless steel for holder block applications. It is supplied pre-heat treated to 32-36 HRC (302-340 Bhn). This stainless steel offers corrosion-resistance and exceptional machinability but cannot be further hardened (see DME #6). For humid environments, corrosive plastics, "clean room" or "100% stainless" applications, it is an ideal choice for all structural mold plates. International comparisons: none.

Steels for Cavity & Core Applications

DME #3 Steel is a P-20 AISI 4130 type cavity steel. Exceptionally clean, it is pre-heat treated to 28-34 HRC (271-321 Bhn). It provides good machinability, the ability to heat treat to higher hardness, and exceptional polishability. International comparisons: DIN 1.2311 G40CrMnMo7; JIS none; ISO none.

DME #5 Steel is an AISI/SAE H-13 type thermal shock resistant, hotwork die steel. Supplied fully annealed (approximately 200 Bhn; 13-20 HRC) for easy machinability, it can be subsequently heat treated to the desired hardness with a minimum of deformation. Mainly used for die cast dies, it is also suitable for plastic molds with exceptional hardness or polishability requirements. DME #5 Steel meets or exceeds the acceptance criteria established by the NADCA as detailed in Technical Digest Number 01-80-01D. International comparisons: DIN 1.2344 (X40CrMoV5-1); JIS SKD 61; ISO 4955 H13.

DME #6 Steel is a modified AISI 420 type stainless steel. It is supplied fully annealed to 179-241 Bhn (8-23 HRC), making it readily machinable. Unlike DME #7 steel, DME #6 steel is a cavity-grade material that can be subsequently heat treated to the desired hardness and has excellent polishability. International comparisons: DIN 1.4028 (X30Cr13); JIS SUS 420 J 2; ISO none.

American Standard Mold Base Features

Ejector Assembly Screws

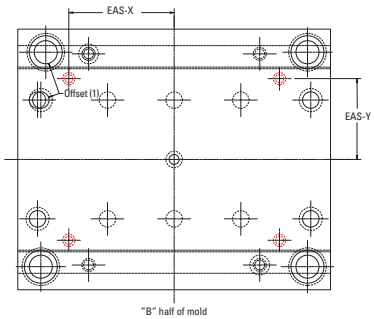

Ejector Assembly Screw Positions

BASE SIZE	SCREW SIZE	EAS X	EAS Y
88	5/16-18	3.375	2.250
812	5/16-18	5.375	2.250
108	5/16-18	3.375	3.062
1012	5/16-18	5.312	3.062
1016	5/16-18	7.375	3.062
1020	5/16-18	9.375	3.062
1112	5/16-18	4.562	3.312
1114	5/16-18	5.562	3.312
1118	5/16-18	7.562	3.312
1123	5/16-18	10.312	3.312
1212	5/16-18	4.500	3.812
1215	5/16-18	6.000	3.812
1220	5/16-18	8.500	3.812
1223	5/16-18	10.250	3.812
*1315	3/8-16	5.812	4.250
*1318	3/8-16	7.312	4.250
1321	3/8-16	8.688	4.250
1323	3/8-16	10.062	4.250
1326	3/8-16	11.312	4.250
1329	3/8-16	13.062	4.250
1518	3/8-16	8.312	5.000
1524	3/8-16	11.250	5.000
1529	3/8-16	14.125	5.000
1616	3/8-16	7.375	5.438
1620	3/8-16	9.375	5.438
1623	3/8-16	11.125	5.438
1626	3/8-16	12.375	5.438
1629	3/8-16	14.125	5.438
1635	3/8-16	17.125	5.438
1724	3/8-16	11.250	5.750
1729	3/8-16	14.125	5.750
1818	3/8-16	8.375	6.438
1820	3/8-16	9.375	6.438
1823	3/8-16	11.125	6.438
1826	3/8-16	12.375	6.438
1829	3/8-16	14.125	6.438
1835	3/8-16	17.125	6.438
1924	1/2-13	11.250	7.250
1929	1/2-13	14.125	7.250
1935	1/2-13	17.125	7.250
2424	1/2-13	11.250	8.875
2429	1/2-13	14.125	8.875
2435	1/2-13	17.125	8.875

*New dimensions 10/02

Upper & Lower Assembly Screws

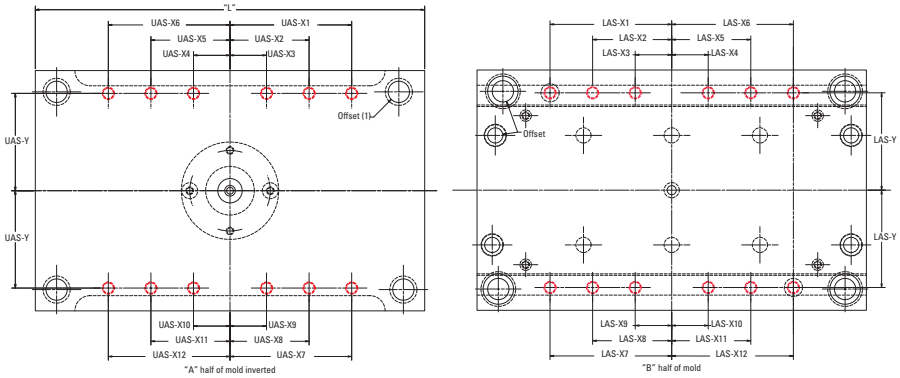

Upper and Lower Assembly Screw Positions

BASE SIZE	SCREW SIZE	UASy LASy	UASx1 LASx1	UASx2 LASx2	UASx3 LASx3	UASx4 LASx4	UASx5 LASx5	UASx6 LASx6	UASx7 LASx7	UASx8 LASx8	UASx9 LASx9	UASx10 LASx10	UASx11 LASx11	UASx12 LASx12
88	1/2-13	3.125	1.375	—	—	—	—	1.375	1.375	—	—	—	—	1.375
812	1/2-13	3.125	2.250	—	—	—	—	2.250	2.250	—	—	—	—	2.250
108	1/2-13	4.000	1.875	—	—	—	—	1.875	1.875	—	—	—	—	1.875
1012	1/2-13	4.000	3.250	—	—	—	—	3.250	3.250	—	—	—	—	3.250
1016	1/2-13	4.000	5.000	—	—	—	—	5.000	5.000	—	—	—	—	5.000
1020	1/2-13	4.000	6.500	—	—	1.000	—	6.500	6.500	—	1.000	—	—	6.500
1112	1/2-13	4.469	3.188	—	—	—	—	3.188	3.188	—	—	—	—	3.188
1114	1/2-13	4.469	3.188	—	—	—	—	3.188	3.188	—	—	—	—	3.188
1118	1/2-13	4.469	5.875	—	—	1.000	—	5.875	5.875	—	1.000	—	—	5.875
1123	1/2-13	4.469	8.625	—	3.188	3.188	—	8.625	8.625	—	3.188	3.188	—	8.625
1212	1/2-13	4.969	2.812	—	—	—	—	2.812	2.812	—	—	—	—	2.812
1215	1/2-13	4.969	4.500	—	—	1.000	—	4.500	4.500	—	1.000	—	—	4.500
1220	1/2-13	4.969	6.625	—	—	1.000	—	6.625	6.625	—	1.000	—	—	6.625
1223	1/2-13	4.969	8.625	—	2.812	2.812	—	8.625	8.625	—	2.812	2.812	—	8.625
1315	1/2-13	5.719	4.500	—	—	1.000	—	4.500	4.500	—	1.000	—	—	4.500
1318	1/2-13	5.719	5.438	—	—	1.000	—	5.438	5.438	—	1.000	—	—	5.438
1321	1/2-13	5.719	6.750	—	—	1.000	—	6.750	6.750	—	1.000	—	—	6.750
1323	1/2-13	5.719	8.125	—	2.750	2.750	—	8.125	8.125	—	2.750	2.750	—	8.125
1326	1/2-13	5.719	9.375	—	3.250	3.250	—	9.375	9.375	—	3.250	3.250	—	9.375
1329	1/2-13	5.719	11.125	—	3.250	3.250	—	11.125	11.125	—	3.250	3.250	—	11.125
1518	1/2-13	6.469	5.438	—	—	1.000	—	5.438	5.438	—	1.000	—	—	5.438
1524	1/2-13	6.469	7.750	—	2.750	2.750	—	7.750	7.750	—	2.750	2.750	—	7.750
1529	1/2-13	6.469	10.625	—	3.688	3.688	—	10.625	10.625	—	3.688	3.688	—	10.625
1616	1/2-13	6.969	4.250	—	—	1.000	—	4.250	4.250	—	1.000	—	—	4.250
1620	1/2-13	6.969	6.250	—	—	1.000	—	6.250	6.250	—	1.000	—	—	6.250
1623	1/2-13	6.969	8.000	—	2.750	2.750	—	8.000	8.000	—	2.750	2.750	—	8.000
1626	1/2-13	6.969	9.250	—	3.125	3.125	—	9.250	9.250	—	3.125	3.125	—	9.250
1629	1/2-13	6.969	11.000	—	3.688	3.688	—	11.000	11.000	—	3.688	3.688	—	11.000
1635	1/2-13	6.969	14.000	8.500	2.875	2.875	8.500	14.000	14.000	8.500	2.875	2.875	8.500	14.000
1724	1/2-13	7.281	7.750	—	2.750	2.750	—	7.750	7.750	—	2.750	2.750	—	7.750
1729	1/2-13	7.281	10.625	—	3.688	3.688	—	10.625	10.625	—	3.688	3.688	—	10.625
1818	1/2-13	7.969	5.438	—	—	1.000	—	5.438	5.438	—	1.000	—	—	5.438
1820	1/2-13	7.969	6.438	—	—	1.000	—	6.438	6.438	—	1.000	—	—	6.438
1823	1/2-13	7.969	8.125	—	2.750	2.750	—	8.125	8.125	—	2.750	2.750	—	8.125
1826	1/2-13	7.969	9.375	—	3.125	3.125	—	9.375	9.375	—	3.125	3.125	—	9.375
1829	1/2-13	7.969	11.125	—	3.688	3.688	—	11.125	11.125	—	3.688	3.688	—	11.125
1835	1/2-13	7.969	14.125	8.500	2.875	2.875	8.500	14.125	14.125	8.500	2.875	2.875	8.500	14.125
1924	1/2-13	8.781	7.750	—	2.750	2.750	—	7.750	7.750	—	2.750	2.750	—	7.750
1929	1/2-13	8.781	11.125	—	3.688	3.688	—	11.125	11.125	—	3.688	3.688	—	11.125
1935	1/2-13	8.781	14.125	8.500	2.875	2.875	8.500	14.125	14.125	8.500	2.875	2.875	8.500	14.125
2424	5/8-11	10.844	7.750	—	2.750	2.750	—	7.750	7.750	—	2.750	2.750	—	7.750
2429	5/8-11	10.844	10.625	—	3.688	3.688	—	10.625	10.625	—	3.688	3.688	—	10.625
2435	5/8-11	10.844	13.625	8.500	2.750	2.750	8.500	13.625	13.625	8.500	2.750	2.750	8.500	13.625

DME: Your Complete Mold Technologies Provider

MILACRON®

DME
Every step of the way

Check Out the Wide Range of DME Product Offerings And You'll See Why We're an Essential Resource to Thousands of Customers Worldwide!

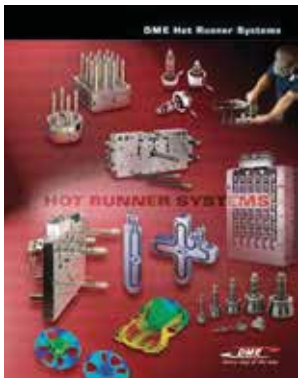

Hot Runner Systems
Moldmakers, molders and mold designers worldwide look to the Hot Runner Systems Catalog for essential hot runner solutions. From best-in-class components to complete, fully-functioning hot half systems,

MUD Quick-Change Systems
Reduce downtime by as much as 75 percent with an innovative approach to fast production changeovers. Master Unit Die is the leader in quick-change systems and the MUD Catalog offers many systems that will maximize your production volume.

Mold Components
With the largest selection of mold components available around the globe, the Mold Components Catalog has the products that will help you meet the unprecedented demands you face for speed, cost reduction and performance.

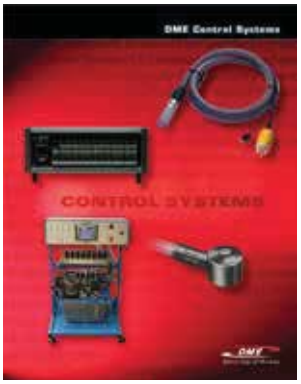

Control Systems
Powerful. Flexible. Affordable. That's what molders want from today's generation of hot runner, valve gate, and process controls, and delivers with a broad line of controllers sure to fit the most demanding application.

Equipment and Supplies
From high-speed cutting tools and finishing and polishing systems to a vast array of maintenance, repair and operation-related products, the Equipment and Supplies Catalog is an invaluable resource for mold technology professionals.

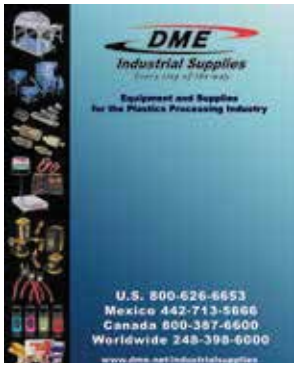

Industrial Supplies
Featuring the best product offerings of Northern Supply, Nickerson and OHS, DME Molding Supplies now has thousands more of the high-quality, economical MRO products you've come to expect from and industry leader.

DME, an essential resource to the customers it serves worldwide, offers the industry's broadest range of market-leading products. With unsurpassed knowledge and expertise, a global logistics infrastructure that ensures speed and accuracy, and a support organization unrivaled for its ability to assist customers when and where they need it, DME has been a molding technologies leader for more than seven decades. A complete line of hot runner systems, control systems, mold bases, MUD quick-change mold systems, mold components, moldmaking and molding equipment supplies, and technical services helps customers compete every step of the way.

DME has over 65,000 CAD files available for everything from mold bases and MUD inserts to hot runner components, temperature control connectors as well as thousands of mechanical components. **With 150 native and neutral file types available, this means you have access to 9 million different file options.**

CAD

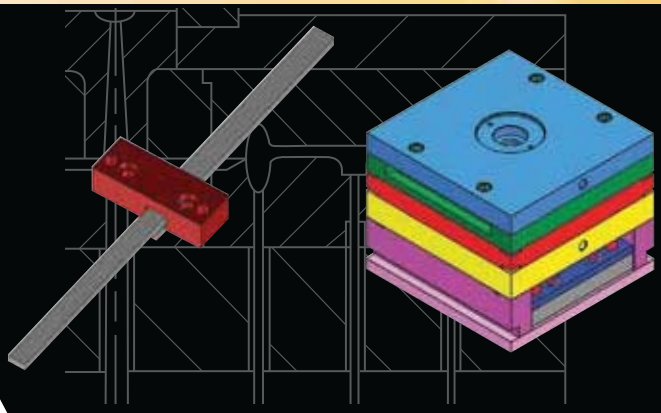

Visit dme.net and simplify your mold designs with easy-to-import DME CAD part files.

MILACRON®

DME
Every step of the way

World Headquarters
DME Company
29111 Stephenson Highway
Madison Heights, MI 48071
800-626-6653 *toll-free tel*
248-398-6000 *tel*
888-808-4363 *toll-free fax*
dme@dme.net *e-mail*

DME Company
6210 Northwest Drive
Mississauga, Ontario
Canada L4V 1J6
800-387-6600 *toll-free tel*
905-677-6370 *tel*
800-461-9965 *toll-free fax*
dme_canada@dme.net *e-mail*

DME de Mexico
Circuito el Marqués Norte, No. 55
Parque Industrial El Marqués
El Marqués, Querétaro,
CP 76246
52 442 713 5666 **tel**
ventas@dme.net **e-mail**