DTR20

Pluvion®

duo

Sprinkler Wire Repair Kit
Run Two Valves using one Field Wire
Device Models: Transmitter (DTR2-TX) and Receiver (DTR2-RX)

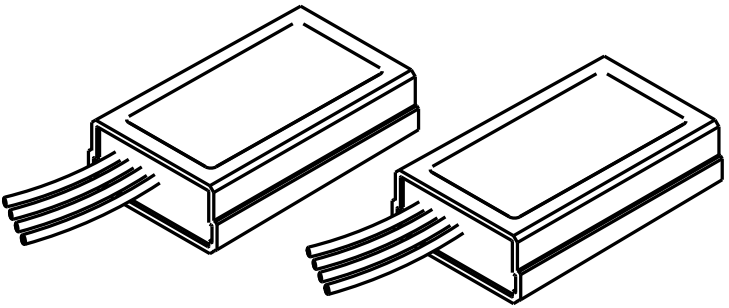

User Instructions and Installation Manual

© 2026 Pluvion Technology Inc.

Document Version 1.00

www.pluviontech.com | info@pluviontech.com

Product Description

The Pluvion Duo irrigation repair kit allows you to operate two sprinkler zones using a single functional field wire. The system consists of:

- The **DTR2-TX** installed at the sprinkler timer.
- The **DTR2-RX** installed at the valve manifold.

Each Duo carries two zones over one field wire. Multiple Duos can be installed in the same irrigation system as long as additional functional conductors are available. For example, a 5-conductor sprinkler cable can support four Pluvion Duo kits, allowing control of up to eight zones.

Table of Contents

System Overview and Components 5
Recommendations for Outdoor Installation 6
Duo Wiring Diagram 7
Troubleshooting 8
Limited Warranty 10
Statement 11

System Overview and Components

The Pluvion Duo system includes two components:

- **DTR2-TX Transmitter**
- **DTR2-RX Receiver**

Each device is clearly labeled for easy identification. Before installation, take a moment to familiarize yourself with both units.

Important: The system will not operate if the transmitter and receiver are interchanged. Always install the **DTR2-TX at the sprinkler timer** and the **DTR2-RX at the solenoids/valves**.

DTR2-TX

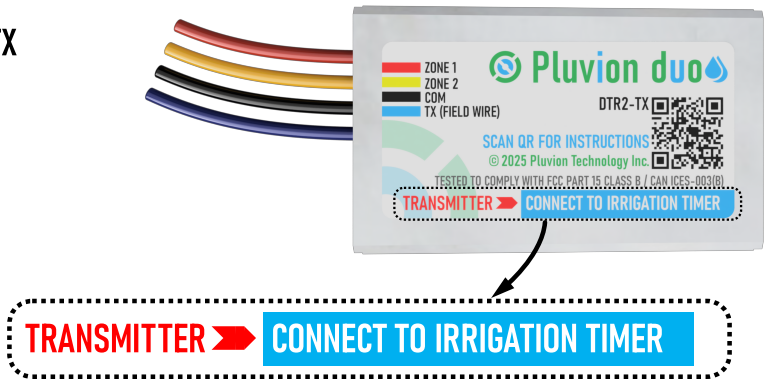

DTR2-RX

Recommendations for Outdoor Installation

Pluvion Duo transmitters and receivers are fully waterproof and designed for outdoor irrigation environments.

The DTR2-TX transmitter may be mounted inside most outdoor sprinkler timer enclosures. If the enclosure has no available space, the transmitter can be installed externally near the timer, provided it remains protected from mechanical damage.

The DTR2-RX receiver can be installed above ground when paired with above-ground valves, or inside a standard valve box when used with in-ground manifolds.

Although all internal electronics are fully encapsulated in epoxy, continuous submersion should be avoided. A flooded valve box usually indicates a system leak and should be inspected and corrected.

Do not bury the receiver directly in soil. Use waterproof wire connectors or grease caps for all outdoor electrical connections to ensure long-term reliability.

Transmitter installed inside or outside of timer enclosure

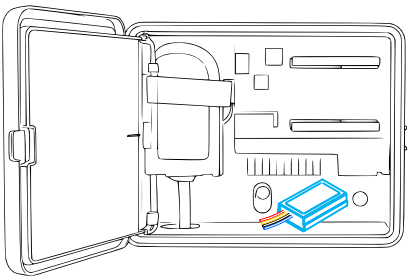

Receiver installed in the valve box

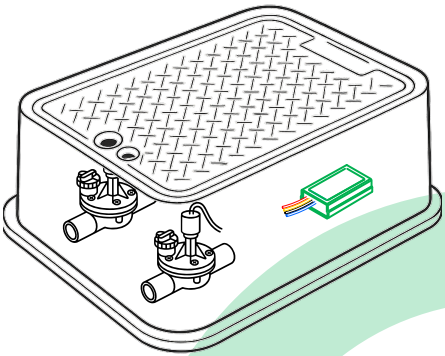

Duo Wiring Diagram

Pluvion Duo connects to any two zones on your sprinkler timer.
The **RED** lead on the Duo is labeled "Zone 1" and the **YELLOW** lead is labeled "Zone 2", but these names do not restrict which controller zones you can use.

- The timer zone wired to the **RED** lead will activate the solenoid wired to the **RED** lead at the receiver.
- The timer zone wired to the **YELLOW** lead will activate the solenoid wired to the **YELLOW** lead at the receiver.

Both the transmitter and receiver require a connection to the system's common ground. Their common ground wires are **BLACK**, and the solenoids must also share this same common ground. The **BLUE** wires on the transmitter and receiver must be connected together using any functional field wire, regardless of color.

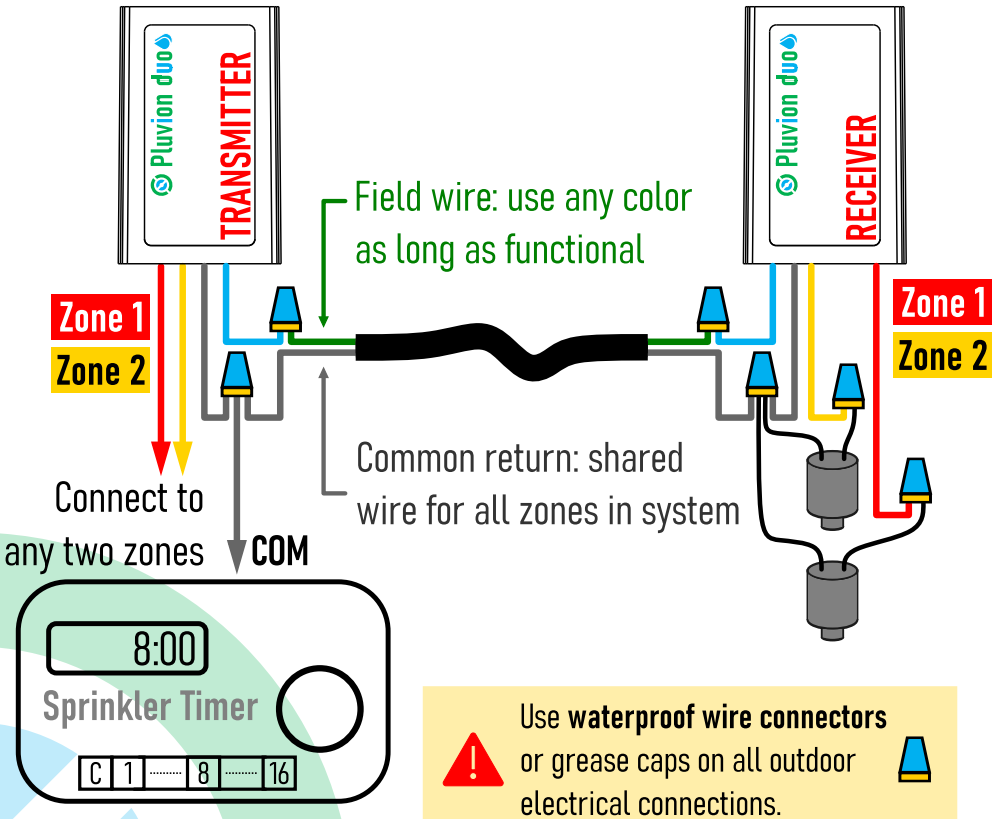

Use **waterproof wire connectors** or grease caps on all outdoor electrical connections.

Troubleshooting

Pluvion Duo is designed for true plug-and-play installation. No pairing or configuration is required. If one or both valves connected to the receiver do not activate as expected, verify the following:

1. Confirm correct device placement

- The transmitter (blue label) must be connected at the sprinkler timer.
- The receiver (green label) must be connected at the solenoids.

2. Verify field wire and common ground integrity

- Both the field wire and the common ground must be functional.
- The common ground conductor in multi-conductor sprinkler cable is often white, but any color can be used if the original common ground wire is damaged.

3. Confirm the sprinkler timer output

- With the transmitter disconnected, activate a zone and measure the timer output.
- A healthy controller supplies 24~28 VAC.

4. Verify transmitter output

- Connect the transmitter and activate a zone wired to the **RED** or **YELLOW** lead.
- Ensure the **BLACK** common wire is connected to the timer's common terminal.
- After a few seconds, the **BLUE** transmitter lead should output 24~28 VAC.

5. Test the field wire path

- Connect the transmitter's **BLUE** wire to the chosen field wire and connect the common ground wire.
- With a zone active, measure the voltage between the field wire and common ground at the far end.
- A reading below 24 VAC indicates excessive resistance or damage to one of the conductors.

6. Verify receiver and solenoid operation

- Once the field wire and common ground are confirmed functional, connect the receiver as shown in the wiring diagram.
- Activate one of the connected zones and measure the voltage at the solenoid. If the solenoid receives less than 24 VAC, the solenoid may be faulty.
- Replace the solenoid and repeat the test.

7. Check for overcurrent shutdown

Pluvion Duo includes automatic overcurrent protection. If in-rush or steady-state current exceeds a safe threshold, the transmitter will shut down to protect the system. A short circuit may exist in:

- the field wire,
- the solenoid, or
- the common ground wire.

To rule out wiring faults:

- Disconnect the field wire and common ground wire from the timer, transmitter, and receiver.
- Measure the impedance between the field wire and common ground.
- A healthy cable typically shows infinite or mega-ohm resistance.
- Anything below 100 kOhm indicates significant insulation damage; use alternative conductors.

Limited Warranty

Pluvion Technology Inc. warrants that its products will be free from defects in materials and workmanship for one (1) year from the date of original purchase.

Pluvion Technology Inc. will repair or replace any product found to be defective under normal use during this one-year period. Proof of purchase is required. This warranty does not cover damage resulting from modification, attempted repair, or any other alteration by the owner. Damage caused by water ingress resulting from incorrect installation is excluded.

Pluvion Technology Inc. is not responsible for any consequential or incidental costs or damages arising from product failure. Liability under this limited warranty is strictly limited to the repair or replacement of the defective product.

To obtain warranty service, contact info@pluviontech.com for further instructions.

This warranty is the sole and exclusive warranty offered. No employee, dealer, or other representative is authorized to modify this warranty or provide any additional warranties on behalf of Pluvion Technology Inc.

Statement

This device complies with Part 15 of the FCC Rules. Operation is subject to the following conditions:

This device may not cause interference, and
This device must accept any interference received, including interference that may cause undesired operation.

Modifications not expressly approved by the responsible party could void the user's authority to operate this equipment.

Note: This equipment has been tested and found to comply with the limits for a Class B digital device, pursuant to Part 15 of the FCC Rules. These limits are designed to provide reasonable protection against harmful interference in a residential installation. This equipment generates, uses and can radiate radio frequency energy and, if not installed and used in accordance with the instructions, may cause harmful interference to radio communications. However, there is no guarantee that interference will not occur in a particular installation.
If this equipment does cause harmful interference to radio or television reception, which can be determined by turning the equipment on and off, the user is encouraged to try to correct the interference by one or more of the following measures:

- Reorient or relocate the receiving antenna.
- Increase the separation between the equipment and the receiver.
- Connect the equipment into an outlet on a circuit different from that to which the receiver is connected.
- Consult the dealer or an experienced radio/TV technician for help.

This digital apparatus complies with Canadian ICES-003(B).
Cet appareil numerique est conforme a la norme NMB-003(B) du Canada.

Please Recycle

© 2026 Pluvion Technology Inc., Whistler, BC V8E 0J3, Canada

www.pluviontech.com | info@pluviontech.com

Pluvion® is a registered trademark in the United States

Designed and assembled in Canada using domestic and imported parts

SKU: PLV-DTR20-KIT
Document Version 1.00 (2026)