2WR4-TPK
2WR4-TX
2WR1-RX

Pluvion®

2-WIRE TapLink™

TAP TO PROGRAM ZONE

2-WIRE System for Residential Irrigation Systems with Tap-To-Program Receivers for up to 16 Zones

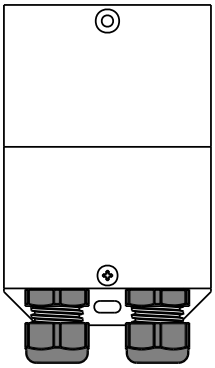

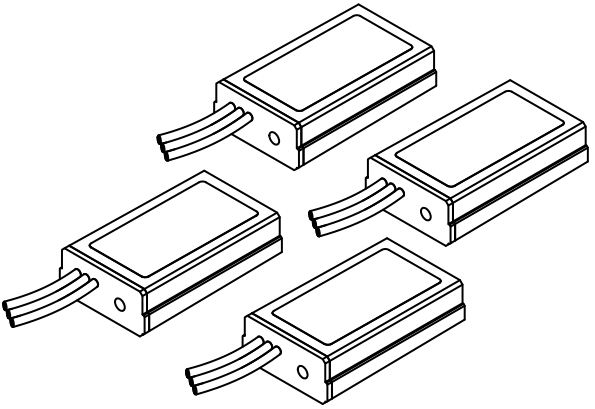

User Instructions and Installation Manual

© 2026 Pluvion Technology Inc.

Document Version 1.00

www.pluviontech.com | info@pluviontech.com

Product Description

Thank you for choosing the Pluvion 2·WIRE TapLink irrigation system. Our mission is to deliver smarter landscaping solutions that install as easily as plug-and-play.

The Pluvion 2·WIRE system uses transmitters and receivers to encode and decode zone information across a two-conductor wire. Devices are available individually or as part of a kit. The 2WR1-RX is a single-zone TapLink receiver featuring Tap-to-Program zone programming, designed to work with Pluvion transmitters such as the 2WR4-TX. A single irrigation system can support up to 16 2WR1-RX receivers, providing control of up to 16 zones using standard two-conductor wiring.

Key Applications and Benefits

- **New installations**: Build a sprinkler system using low-cost, two-conductor low-voltage landscape wire.

- **Repairs**: Restore functionality to systems with damaged wiring, provided at least two conductors in the existing multi-conductor cable remain usable.

- **Expansion**: Add new zones without replacing or upgrading existing wiring.

The Pluvion 2·WIRE system is fully compatible with standard 24 VAC sprinkler timers, including internet-connected smart timers. Transmitters are installed near the sprinkler timer, while receivers are placed close to the valves and solenoids.

Important: This is not a wireless product. A field wire and common ground return are required between transmitters and receivers.

Table of Contents

System Overview and Components 5
Recommendations for Outdoor Installation 6
2·WIRE Installation Using Tap-to-Program Receivers 7
New Sprinkler System Installation using 18/2 Landscape Wire 13
Multiple Transmitters to Support up to 16 Sprinkler Zones 14
TapLink Tap-to-Program Receiver Lock and Unlock 16
Troubleshooting 18
Limited Warranty 20
Statement 21

System Overview and Components

2WR4-TX: Transmitter

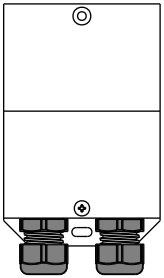

2WR1-RX: Receiver

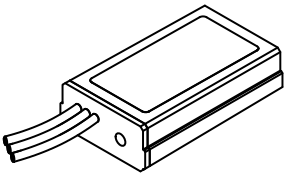

The Pluvion 2·WIRE system is composed of transmitters and receivers. Your 2WR1-RX receiver(s) may have been purchased as part of a kit that includes a 2·WIRE transmitter (such as the 2WR4-TX), or the transmitters and receivers may have been obtained separately.

Transmitter capacity: Each 2WR4-TX transmitter can support up to four 2WR1-RX receivers, allowing control of up to four irrigation zones.

System expansion: Multiple transmitters and receivers can be combined within a single irrigation system, all connected to one sprinkler timer.

Maximum capacity: A complete 2·WIRE system can manage up to 16 zones.

For example, the required components for different zone configurations are:

# Zones	# Transmitters (2WR4-TX)	# Receivers (2WR1-RX)
2	1	2
4	1	4
8	2	8
16	4	16

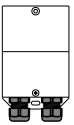

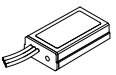

Recommendations for Outdoor Installation

The **2WR1-RX** receiver is fully waterproof and may be installed above ground or in a valve box near the solenoid or valve. Although the internal electronics are completely potted, **continuous submersion of any electronic device or wire connector should be avoided**. A flooded valve box usually indicates a leak and should be inspected. **Do not bury the receiver directly in soil**.

The **2WR4-TX** transmitter is weatherproof but has installation limitations. It must be kept **above ground** with its connectors **facing downward** to maintain proper weatherproofing.

Ensure to use **waterproof wire connectors or grease caps** to connect all wires.

Receiver Installation

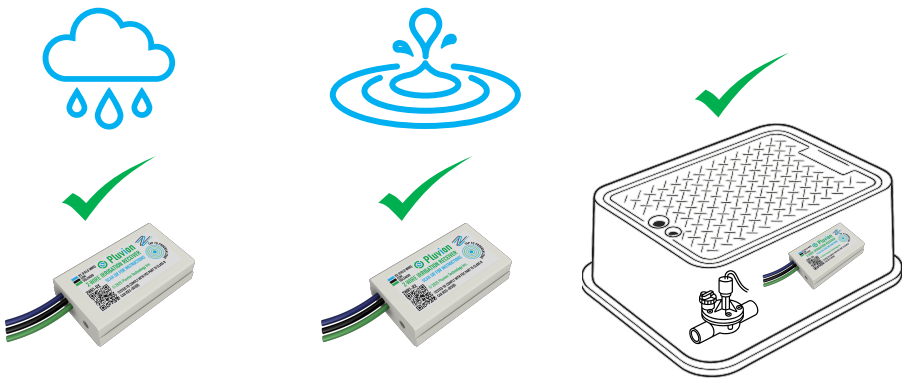

Transmitter Installation

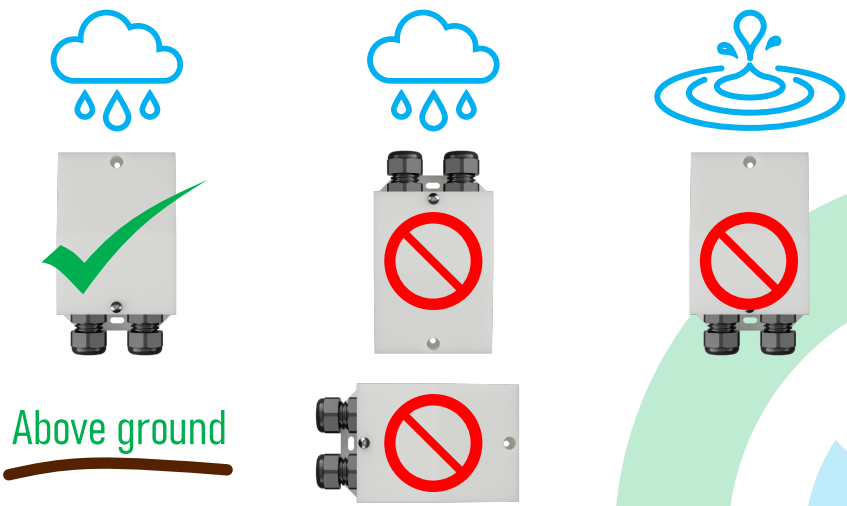

2·WIRE Installation Using Tap-to-Program Receivers

Pluvion 2·WIRE supports a wide range of applications, including new installations, system repairs, and adding zones. This manual explains how one or more 4-zone transmitters (2WR4-TX) can upgrade a conventional irrigation system using only a two-conductor landscape wire, or an existing multi-conductor cable with at least two functional conductors.
The total number of zones is limited by the sprinkler timer's capacity, with support for up to 16 zones when using 2WR1-RX receivers. These receivers include a Tap-to-Program feature that allows fast, simple zone assignment without any special tools.

Wiring diagram of a conventional residential sprinkler system:

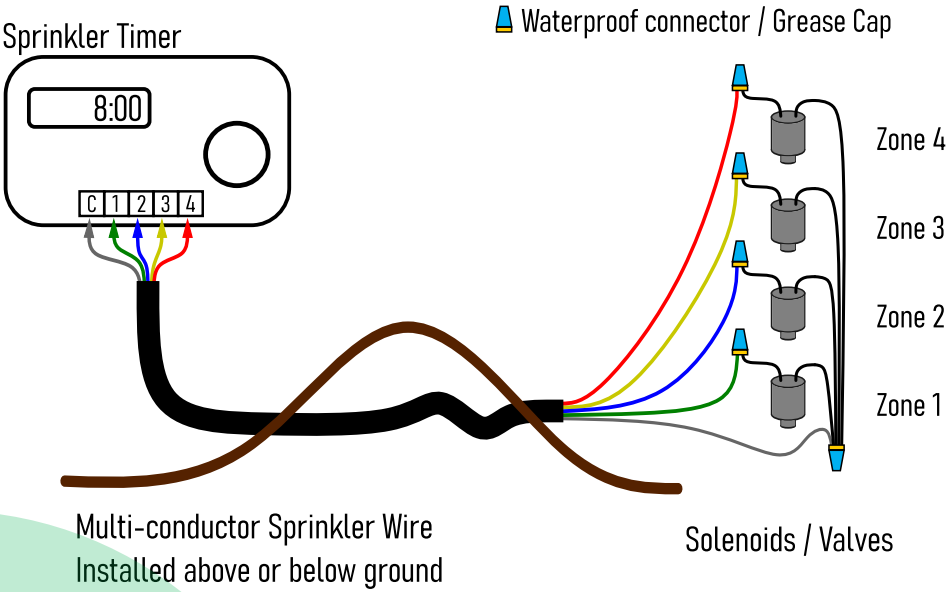

Step-by-Step Installation: Repair or Expansion of an Existing System

Step 1 › Verify That Existing Wiring Has at Least Two Functional Conductors

The electrical portion of a sprinkler system consists of three main components, and a failure can originate from any of them:

- Sprinkler timer
- Sprinkler wire
- Solenoids/valves

If the sprinkler wire has one or more damaged conductors, Pluvion 2·WIRE can still restore system functionality as long as at least two conductors remain usable. When adding zones, any functional field wire can be repurposed as a 2·WIRE field wire.

A single 2WR4-TX transmitter supports up to four zones, but it can also operate with only two or three zones, leaving any unused zone terminals unconnected.

Step 2 › Select Conductors for the 2·WIRE Interface

Disconnect the sprinkler timer from its power source. Identify two functional conductors that will serve as the 2·WIRE interface. Although a white conductor is commonly used for the common ground return (**COM/C**), any functional conductor may be used. If the original white **COM** conductor is damaged, simply choose another working conductor to serve as **COM**.

Step 3 › Open the transmitter enclosure

Remove the screw securing the transmitter enclosure and lift off the cover. The transmitter can be identified by its black connectors. After removing the enclosure, gently pull the connector base straight off the board assembly.

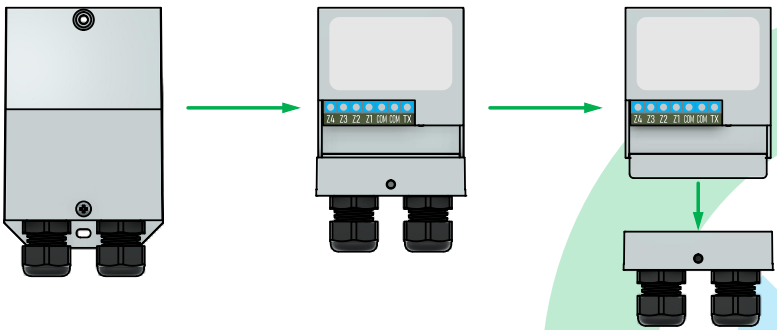

Step 4 > Connect the transmitter to the sprinkler timer

Install the transmitter near the sprinkler timer. Cut the existing sprinkler wire approximately 2–3 ft from the timer, and connect the transmitter to the cut wires as shown in the diagram below. The color of the conductors used for the 2·WIRE **TX** and **COM** signals is not important; when using an existing sprinkler cable, any functional conductor may be used.

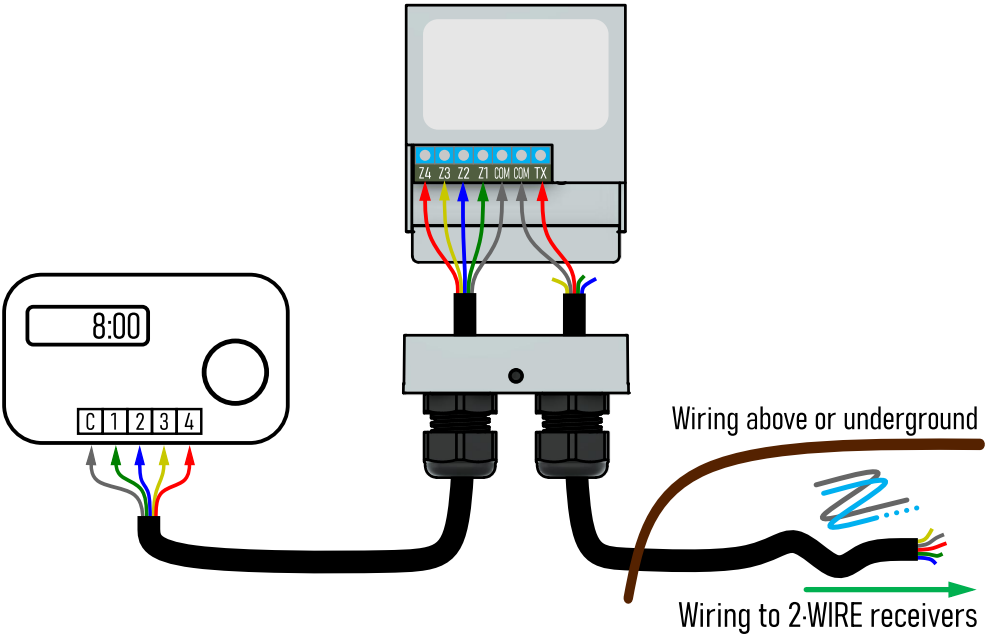

Notice: depending on the model, your sprinkler timer may offer 4, 6, 8, 12, or 16 zones. Select any four, or less, of these zones and wire them to Z1–Z4 on the transmitter. These selected zones will be delivered to the receivers over the 2·WIRE cable.

Step 5 > Connecting the 2WR1-RX Receivers

Each 2WR1-RX receiver has three wires that must be connected to the 2·WIRE field wire, the system common ground, and the solenoid. The diagrams on the next page identify the wire colors and required connections.

Review Step 6 (Programming) **before** making the connections described in Step 5. Depending on the programming method you choose, the receiver may be programmed either before installation or after it is wired in the field.

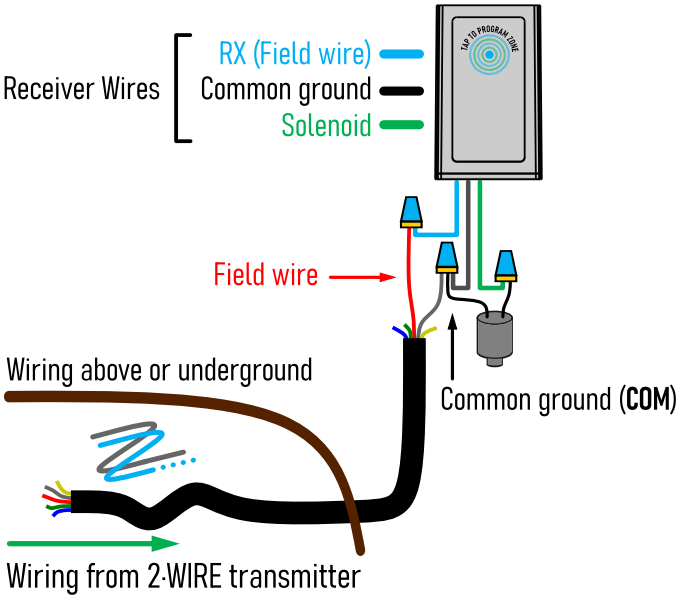

When **multiple receivers** are installed close together (such as in the same valve box), bundle all blue receiver wires to the 2-WIRE field conductor, and combine all receiver and solenoid ground wires with the system ground. Use additional waterproof connectors as needed.

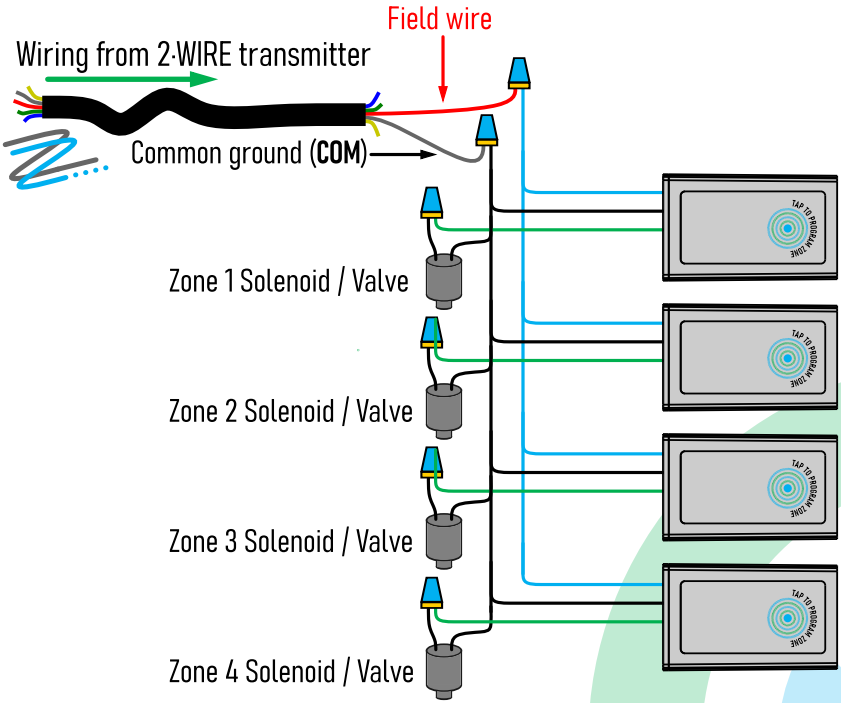

Step 6 > Programming a Zone into the 2WR1-RX Receivers Using Tap-to-Program

A new 2WR1-RX receiver must be programmed to control one of the 16 zones in a 2·WIRE system. The receiver includes a Tap-to-Program feature that assigns a zone without requiring any external tools or device settings. Programming can be completed in either of the following ways:

A Program the receiver in the field after completing the wiring described in Step 5.

B Program each receiver individually by connecting it directly to the 2WR4-TX transmitter's TX and COM terminals as in the diagram below. When using this method B, complete programming before installing the receiver as outlined in Step 5.

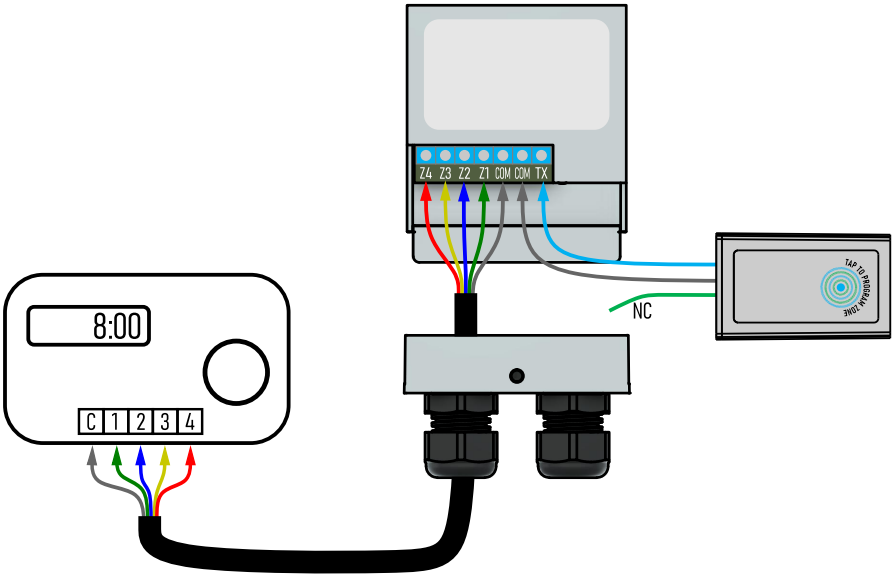

The **Tap-to-Program** feature lets you assign a sprinkler zone by simply activating that zone on the sprinkler timer and tapping the receiver. Follow these steps:

1 > On the sprinkler timer, **manually turn on the zone you want to assign to the receiver**. Allow the zone to run for at least a few minutes.

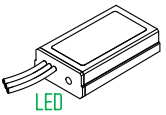

2 > **Watch the receiver's front-panel LED**.
When the system is activated, the LED will blink once. After about 2 seconds, a second blink confirms that the receiver has received the zone information and is ready to be programmed.

(continued - programming sequence)

3 > **Hold the receiver and tap it firmly at least five times**.
Tap on the Tap-to-Program logo or anywhere on the enclosure, with the same firmness you would use on a touchscreen or keyboard. Each registered tap will produce a quick LED flash. On the fifth tap, the LED will stay on for 2 seconds, indicating that the zone has been assigned and the receiver is now programmed and ready for use.

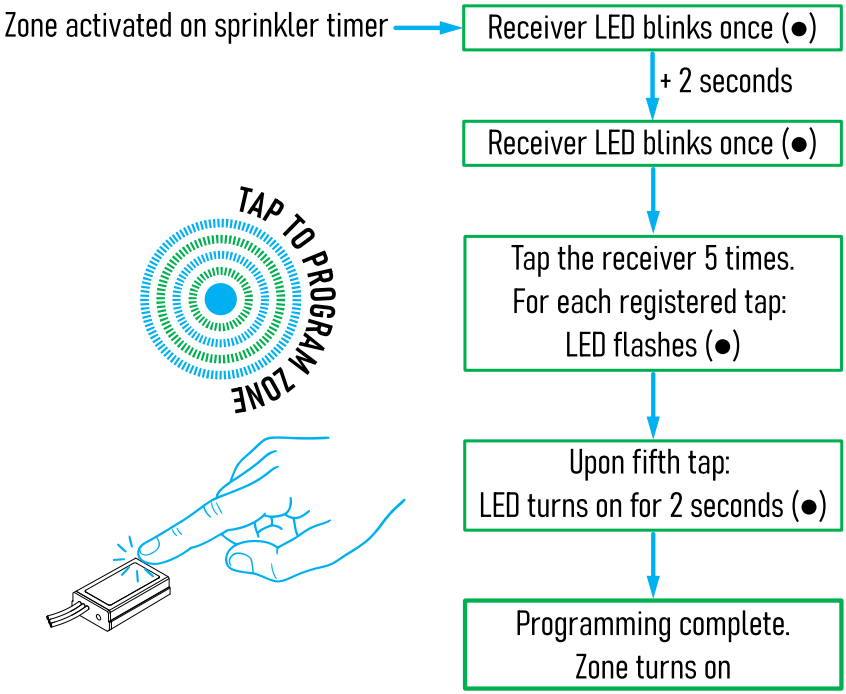

The LED will slowly flash continuously during normal operation.
You can monitor the active zone number (1-16) by counting the number of flashes in a single sequence.

Notice: The Tap-to-Program feature is active for approximately **two minutes**. New receivers are not assigned to any zone and must be programmed by the installer before use. Any receiver can be reprogrammed within the first two minutes after any zone on the 2·WIRE system is activated.
For initial system setup and programming of multiple receivers method B is recommended.

Step 7 > Reinstall enclosures and mount the transmitter

Reinstall the transmitter connector base into the board assembly. Ensure the wiring between the base and terminal block is properly seated, then tighten the wire connectors only after the base is fully inserted. Reattach the transmitter enclosure using the single screw provided. Mount the transmitter on a wall near the sprinkler timer. Receivers should be installed in valve boxes or near above-ground valves.

Always install the transmitter above ground level, away from standing water, with the wire connectors facing downward. Receivers are fully waterproof and have no placement restrictions, but, as with any electronic device, minimizing unnecessary water exposure is still recommended.

Step 8 > Verify complete system installation and test sprinkler operation

Manually test each zone to confirm proper operation. The transmitter includes a status LED on the board assembly that identifies the active zone by the number of short flashes. For example, when Zone 3 is active, the LED will blink three times, pause, and repeat. This indicator is useful for troubleshooting and may require removing the enclosure for visibility.

Each receiver also includes a status LED that flashes the assigned zone number (1–16) during operation. When testing the system, ensure that **only one receiver is active at a time**. Running multiple zones simultaneously is not recommended, as it may reduce water pressure or trigger overload or short-circuit protection in the transmitter or sprinkler timer.

New Sprinkler System Installation Using 18/2 Landscape Wire

Using Pluvion 2·WIRE, a new sprinkler system may be installed using low-voltage direct burial 18/2 landscape wiring. This will provide a low-cost wiring solution between the sprinkler timer and the valve assemblies.
To connect the sprinkler timer to the transmitter it is recommended to use a short (2-3 ft.) 5-conductor sprinkler wire as a jumper wire.

Follow the instructions as in the previous section, while using low-voltage landscape wire (18/2) for the 2·WIRE interface between the transmitter and the receiver.

Multiple Transmitters to Support up to 16 Sprinkler Zones

A single sprinkler system can support up to four transmitters and sixteen Tap-to-Program receivers, providing control of up to 16 zones over a 2·WIRE interface using only two conductors in existing or new wiring. Each transmitter can be assigned to one of four groups, with each group controlling four zones. The transmitter's board assembly includes a DIP switch for setting the device's group number.

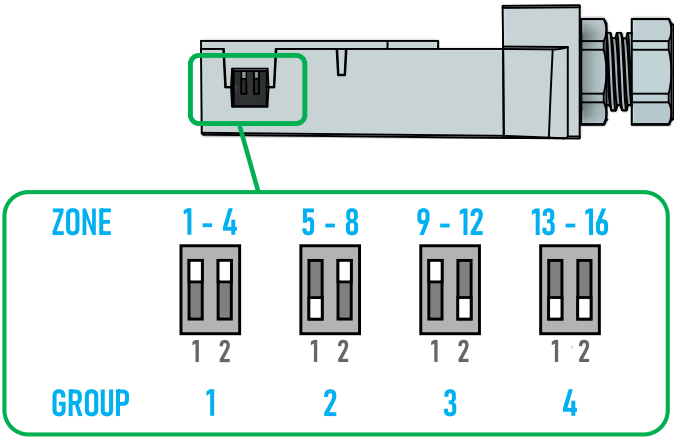

Wiring Warning: Transmitters Must Share the Same TX and COM Lines

When using multiple transmitters in one 2·WIRE system, **all TX terminals must be tied together and all COM terminals must be tied together. These lines must never be crossed.** If the TX output of one transmitter is connected to the COM terminal of another (and vice-versa), the system's AC wiring will be effectively shorted, causing the entire irrigation system to shut down and preventing all components from operating.

Multiple transmitters can be used in combination **with a single sprinkler timer only**. Using more than one sprinkler timer may damage the system.

Each of the transmitters **MUST** be assigned a unique group number. Having multiple transmitters with the same group number may result in system malfunction or damage.

The diagram on the following page illustrates a setup using two 2WR4-TX transmitters connected to an eight-zone sprinkler timer. All eight zones are carried over a single 2·WIRE field wire to eight 2WR1-RX receivers. The system can be expanded to 12 or 16 zones by adding one or two additional transmitters.

Sprinkler Timer with Dual Transmitters in an Eight Zone System

8:00

1 2 3 4 C 5 6 7 8

Transmitter 2

Z4 Z3 Z2 Z1 COM COM TX

Group 2:
2-WIRE Zones 5 - 8

5 - 8

1 2

Connect TX field wire between transmitters using jumper wire

Transmitter 1

Z4 Z3 Z2 Z1 COM COM TX

Group 1:
2-WIRE Zones 1 - 4

1 - 4

1 2

Wiring to 2-WIRE receivers

Wiring Warning: Transmitters Must Share the Same TX and COM Lines

Tap-to-Program Receivers in an Eight Zone System

Wiring from 2-WIRE transmitters

Field wire

Use additional waterproof wire connectors as needed

Common ground (**COM**)

Zone 1 Solenoid / Valve

Zone 2 Solenoid / Valve

Zone 8 Solenoid / Valve

Receiver 1

Receiver 2

Receiver 8

TAP TO PROGRAM ZONE

TapLink Tap-to-Program Receiver Lock and Unlock

TapLink Receivers are designed to detect intentional tap sequences while filtering out normal noise, vibration, and movement, so accidental programming is uncommon. In some cases, though, installers may prefer to lock the system after setup to prevent end-users from changing zone settings. For these situations, the receivers include a simple lock/unlock function that works with standard irrigation timers. When locked, the Tap-to-Program feature is disabled until the system is intentionally unlocked.

Locking the Tap-to-Program Feature

Your standard sprinkler timer functions as the programming tool for locking the Tap-to-Program Receivers. The lock sequence consists of **two short power cycles on Zone 1**, followed by a third Zone 1 activation, after which all receivers enter the locked state. A short power cycle is defined as less than 30 seconds of power. Allow at least 5 seconds between each power cycle to ensure the sequence is detected reliably.

Important: The entire 2·WIRE TapLink system, including the transmitter, must be fully installed before running the lock procedure. One transmitter in the system must be configured to Group 1.

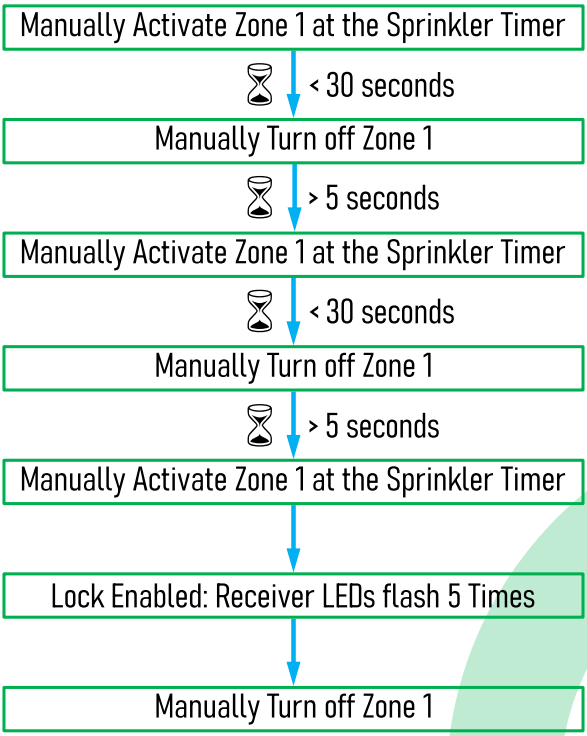

Unlocking the Tap-to-Program Feature

Your standard sprinkler timer also serves as the programming tool for unlocking the Tap-to-Program Receivers. The unlock sequence consists of **two short power cycles on Zone 2**, followed by a third Zone 2 activation, after which all receivers return to the unlocked state. A short power cycle is defined as less than 30 seconds of power. Allow at least 5 seconds between each power cycle to ensure the sequence is detected reliably.

Important: The entire 2·WIRE TapLink system, including the transmitter, must be fully installed and powered before running the unlock procedure. One transmitter in the system must be configured to Group 1.

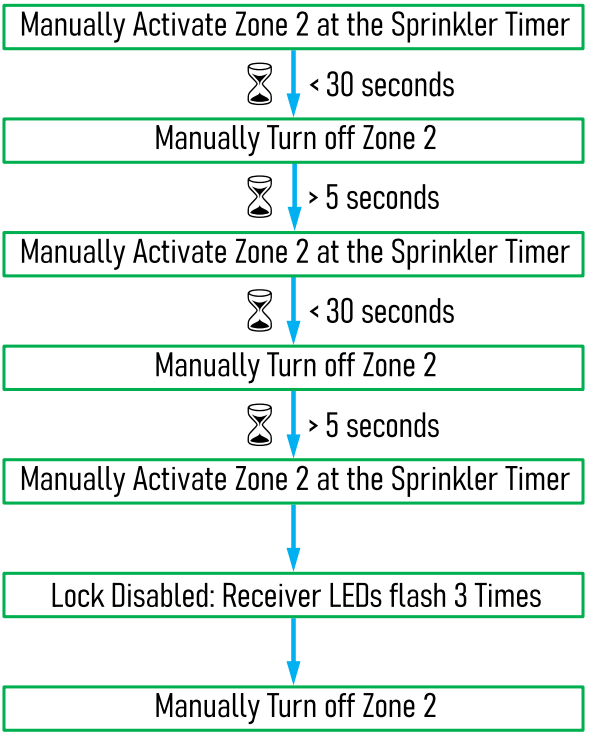

Troubleshooting

The troubleshooting guide in this section is written for a single-transmitter system. Systems using multiple transmitters can be diagnosed in the same way by applying the step-by-step process to each device individually.

If any zone fails to activate as expected, **begin by verifying the transmitter**:

1. Remove the transmitter enclosure.
2. Manually activate **Zone 1** on the sprinkler timer and observe the **LED** on the right side of the transmitter board assembly. A **brief LED burst** indicates communication between the transmitter and the receiver. After this burst, proper operation is confirmed when the LED **blinks once**, followed by a short pause, repeating while the zone remains active.
3. The transmitter includes short-circuit protection. If the wiring or solenoid is shorted, the LED will remain **solidly on** and the system will shut down.
   Repeat this test for **Zones 2, 3, and 4**. The LED should blink **2, 3, or 4 times** respectively, each sequence followed by a short pause and repeated while the zone is active.
4. If the transmitter LED does not show the expected activity for any zone, verify the wiring between the sprinkler timer and the transmitter. Use an AC voltmeter to confirm that an active zone outputs approximately **24 VAC** between the zone terminal (**Z1-Z4**) and **COM**.

Once the transmitter has been confirmed to operate correctly but the system still malfunctions, **proceed to verify the receivers**:

5. Manually activate **Zone 1** and observe the front-panel **LED** on the receiver assigned to Zone 1. The LED should follow the **blinking pattern described in the Programming section**. If the LED cannot be observed at startup, for example due to distance, disconnect the receiver and connect it directly to the transmitter as described in **Programming Method B**. If the LED behaves correctly when connected directly, the **field wire or common ground conductor** is likely at fault.

6. If the receiver LED **blinks only twice** with a two-second interval, reprogram the receiver using **Tap-to-Program Method B**.

7. After confirming correct LED behavior, reconnect the **field wire and common ground wire** to the transmitter's **TX** and **COM** terminals. Use a voltmeter to measure the voltage between the receiver's **RX** and **COM** wires. When the sprinkler timer activates a zone assigned to the transmitter, the voltage should be approximately **24 VAC**. If the voltage is significantly lower, the field wire or common ground wire is likely defective. When reusing an existing multi-conductor sprinkler cable, ensure the same conductor colors are consistently used for the field wire and common ground.

8. Repeat this troubleshooting procedure for any receiver that does not show the expected behavior.

Important Checks for Systems with Multiple Transmitters (8/12/16 Zones)

1. **Verify unique group numbers.** Each transmitter must be assigned a **different Group number** using its DIP switch. If two transmitters share the same Group, zones may activate incorrectly or in the wrong combinations.
2. **Check for crossed TX/COM wiring.** If no zones activate after adding transmitters, inspect the wiring carefully. Crossing the **TX** and **COM** lines between transmitters creates a short circuit in the AC sprinkler system. All **TX terminals must connect to the same field wire**, and all **COM terminals must connect to the system common ground**.

Limited Warranty

Pluvion Technology Inc. warrants that its products will be free from defects in materials and workmanship for one (1) year from the date of original purchase.

Pluvion Technology Inc. will repair or replace any product found to be defective under normal use during this one-year period. Proof of purchase is required. This warranty does not cover damage resulting from modification, attempted repair, or any other alteration by the owner. Damage caused by water ingress due to incorrect installation is also excluded.

Pluvion Technology Inc. is not responsible for any consequential or incidental costs or damages arising from product failure. Liability under this limited warranty is strictly limited to the repair or replacement of the defective product.

To obtain warranty service, contact info@pluviontech.com for further instructions.

This warranty is the sole and exclusive warranty offered. No employee, dealer, or other representative is authorized to modify this warranty or provide any additional warranties on behalf of Pluvion Technology Inc.

Statement

This device complies with Part 15 of the FCC Rules. Operation is subject to the following conditions:

This device may not cause interference, and
This device must accept any interference received, including interference that may cause undesired operation.

Modifications not expressly approved by the responsible party could void the user's authority to operate this equipment.

Note: This equipment has been tested and found to comply with the limits for a Class B digital device, pursuant to Part 15 of the FCC Rules. These limits are designed to provide reasonable protection against harmful interference in a residential installation. This equipment generates, uses and can radiate radio frequency energy and, if not installed and used in accordance with the instructions, may cause harmful interference to radio communications. However, there is no guarantee that interference will not occur in a particular installation.
If this equipment does cause harmful interference to radio or television reception, which can be determined by turning the equipment on and off, the user is encouraged to try to correct the interference by one or more of the following measures:

- Reorient or relocate the receiving antenna.
- Increase the separation between the equipment and the receiver.
- Connect the equipment into an outlet on a circuit different from that to which the receiver is connected.
- Consult the dealer or an experienced radio/TV technician for help.

This digital apparatus complies with Canadian ICES-003(B).
Cet appareil numerique est conforme a la norme NMB-003(B) du Canada.

Please Recycle

© 2026 Pluvion Technology Inc., Whistler, BC V8E 0J3, Canada

www.pluviontech.com | info@pluviontech.com

Pluvion® is a registered trademark in the United States

Designed and assembled in Canada using domestic and imported parts

SKU: PLV-2WR4TKP-0, PLV-2WR1RX-0, PLV-2WR4TX-0
Document Version 1.00 (2026)