Quick Start: Setting Up Pluvion 2·WIRE Transmitters & Tap-to-Program Receivers

Pluvion®

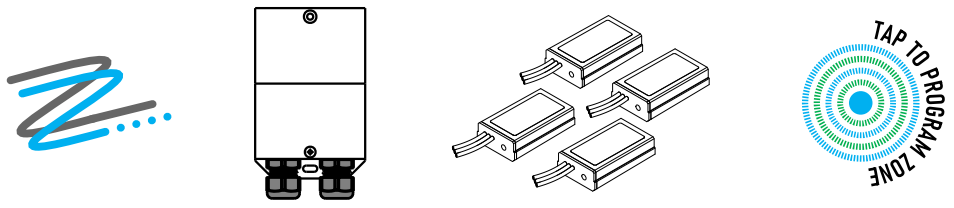

Repairing or expanding your sprinkler system is easy with the Pluvion 2·WIRE system. **It runs up to 16 zones on just two wires**, ideal for damaged cables or new coverage areas. Connect up to four 4-Zone transmitters to Tap-To-Program receivers and tap to assign each zone. Pluvion delivers a flexible, efficient, wire-saving solution for fixes or new installs.

This guide applies to a single 2·WIRE transmitter used with Tap-to-Program receivers, whether purchased individually or in a kit. For systems with multiple transmitters or up to 16 zones, refer to the full instruction manual for complete installation details.

Model: 2WR4-TX / 2WR1-RX

© 2026 Pluvion Technology Inc.

www.pluviontech.com | info@pluviontech.com

SCAN QR FOR INSTALLATION MANUAL v1.01

Installation Instructions (Timer > Transmitter > Receiver > Solenoid)

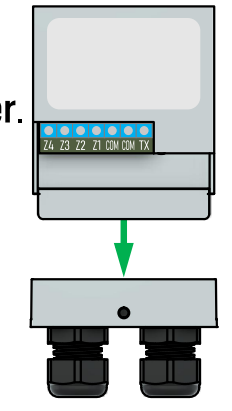

1 Identify the 2WR4-TX **four-zone transmitter** by its **BLACK connectors**. Remove the cover using a **Phillips screwdriver**.

2 Pull the **connector base** from the **board assembly**.

3 Refer to the **wiring diagram** to connect the **sprinkler timer** to the **transmitter**:
- Select any **four zones** from the timer.
- Connect the **2·WIRE signal (TX)** from the transmitter to any functional **field wire** in existing or new wiring (the color of the field wire does not matter).
- Connect the timer's **common ground terminal (COM)** to the transmitter.

4 Connect the 2WR1-RX Tap-to-Program receiver wires as follows:

BLUE > Field wire used for the **2·WIRE signal (RX)** from the transmitter. Ensure the field wire color matches the color used at the transmitter connection.

GREEN > **Solenoid** of the targeted zone.

BLACK > **Common ground return (COM).**

Wiring Diagram

One 2WR4-TX transmitter supports up to four zones.

Pluvion 2·WIRE uses a single field wire for up to 16 zones: **all receivers share the same field wire and common ground**.

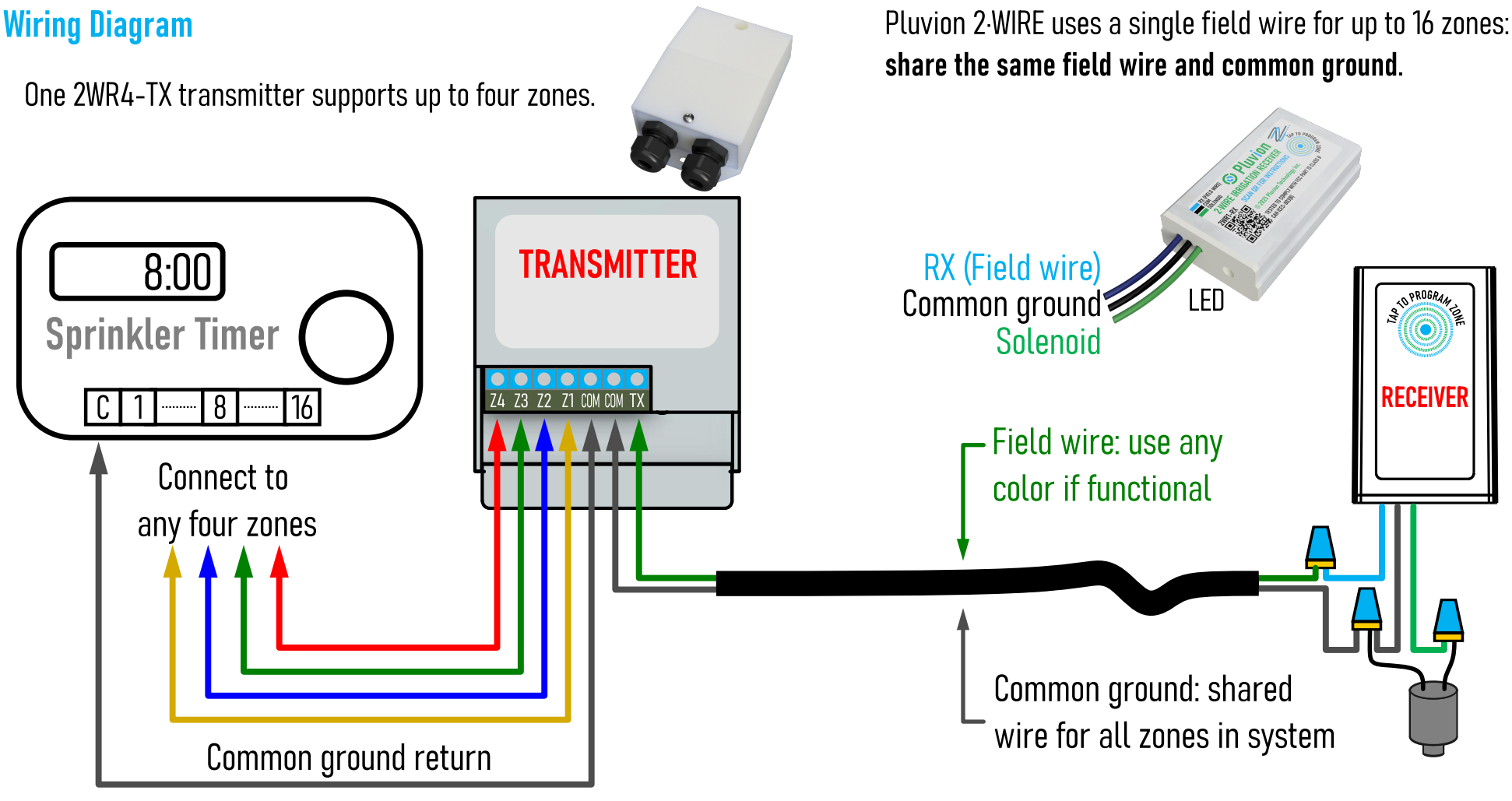

Programming Instructions: 2-WIRE Tap-to-Program Receiver

1. Turn on any zone connected to the 2-WIRE transmitter using the timer. **The active zone will be the one programmed** into the receiver.
2. Ensure the **receiver is hand-held during programming**. The LED will blink once when the zone is turned on and again after two seconds. Then, **firmly tap the receiver enclosure at least five times**. Each tap is confirmed with a short LED blink. After five taps are registered, the zone will activate and be programmed into the receiver for future use.

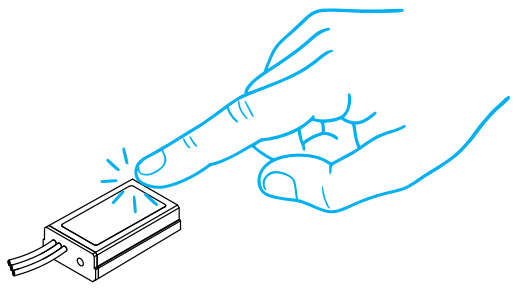

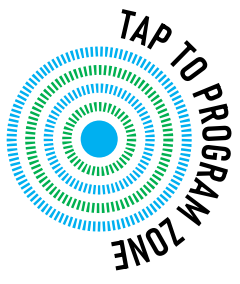

Transmitter and Receiver Placement Guidelines

⚠ Install the **transmitter near the sprinkler timer**. For outdoor use, keep the connectors facing downward for weatherproof protection.

⚠ Install the **receivers in the valve box** and/or near the valves. The receivers are fully waterproof for reliable outdoor use.

⚠ This is not a wireless product: a **2-conductor wire is required** between the transmitter and receiver, using either two functional conductors in existing sprinkler wiring or 18/2 landscape wire.

⚠ Use **waterproof wire connectors** for any outdoor installation. Do not directly bury the receivers or wire connectors in soil.

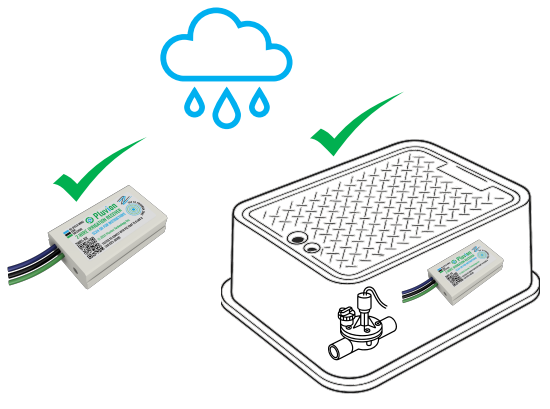

Programming Notes:

- You have approximately **2 minutes** to complete programming; after this period, the receiver will no longer respond to tapping.
- **A new receiver has no zone programmed** and will not activate any zone until programmed.
- When programming multiple receivers for initial use, for convenience you may connect them one at a time directly to the transmitter: connect the **BLUE** wire to the transmitter's **TX** terminal and the **BLACK** wire to the transmitter's **COM** terminal. The green wire can be left unconnected. The tapping procedure is the same. After programming, connect each receiver to its designated solenoid.

2-WIRE TapLink™

Pluvion®

Designed and assembled in Canada using domestic and imported parts

This device complies with Part 15 of the FCC Rules. Operation is subject to the following two conditions: (1) This device may not cause harmful interference, and (2) this device must accept any interference received, including interference that may cause undesired operation.

FC

CAN ICES-003(B) / NMB-003(B)