Jtech

MCR-ASB-ET / MCR-ASB-C

Cooked-Rice Mixer "SHARIKKA"

Sushi rice mixing made easy!

The most delicate part of sushi rice preparation is blending the cooked rice with vinegar. This blender is made fully automated, making it simple while giving a perfect result.

- Light weight drum
- High grade non-stick parts
- Easy handling
- Easy cleaning
- 6 pre-programmed settings
- Auto dispensing feature

Cooked-Rice Mixer *"SHARIKKA"* MCR-ASB-ET / MCR-ASB-CE

Dimensions

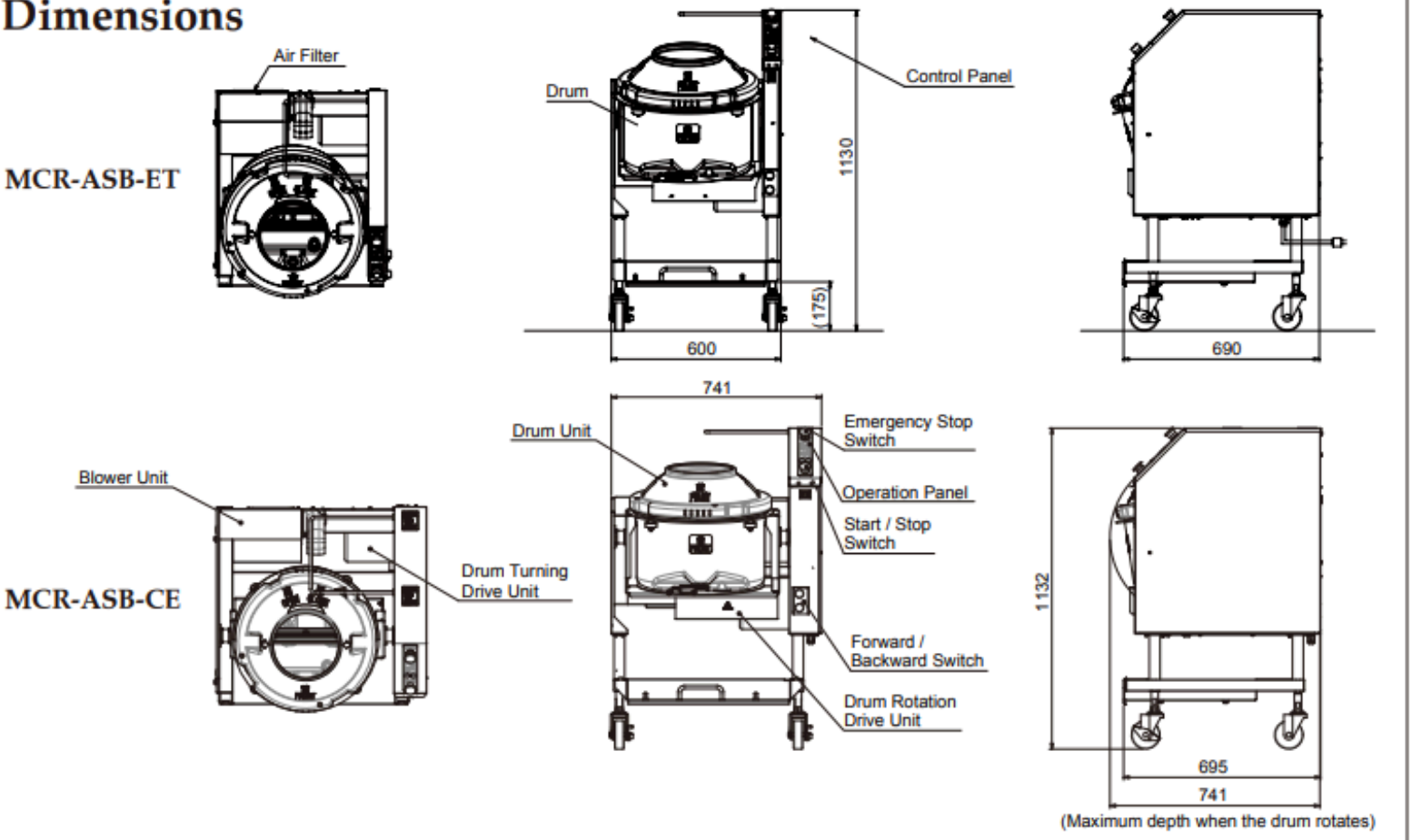

Specification

Model	MCR-ASB-ET (Meets UL/NSF standards) MCR-ASB-CE-SE/MCR-ASB-CE-BF * (Applied to CE & UKCA Regulation) * The model name is different in accordance with power plug.
Machine Dimensions	MCR-ASB-ET: 600W×690D×1,130H mm MCR-ASB-CE: 741W×695D×1,132H mm 741D (Maximum depth when the drum rotates.) * The dimensions do not show small bumps and bosses.
Input	MCR-ASB-ET: AC110 - 120V, 50/60 Hz Single Phase MCR-ASB-CE: AC220 - 240V, 50/60 Hz Single Phase
Power Consumption	MCR-ASB-ET: 400W MCR-ASB-CE:180VA
Rice Amount Capacity	Maximum 13kg of cooked rice
Mixing Time	Approx. 5 - 7 minutes including auto dispensing time.
Machine Weight	MCR-ASB-ET: Approx. 80kg MCR-ASB-CE: Approx. 85kg
Power Cable	MCR-ASB-ET: Approx. 3m MCR-ASB-CE: Approx. 2.3m
Function	Fully Automated (Rice and vinegar added manually.)

Features

- Rice and vinegar are blended without damaging the rice grains like an experienced chef.
- Sushi rice is evenly cooled and mixed with simultaneous aeration and mixing.
- The sushi rice is poured out automatically when the mixing is complete.
- High grade non-stick resin eliminates Teflon coating.
- Drum parts (drum, lid, and agitator) can be taken apart in seconds for easy handling and cleaning.

***Designs and specifications are subject to change without notice. *Rice Amount Capacity described in Specification is based upon proper operation.**