CONTENTS目录

A 外圆车刀
EXTERNAL TURNING TOOLS
>>>
PAEG 001-059

- 外圆车刀复合式
  COMPOSITE EXTERNAL TURNING TOOL
  PAEG 003-032
- 外圆车刀螺钉式
  SCREW TYPE EXTERNAL TURNING TOOL
  PAEG 033-059

B 内孔车刀
INNER HOLE TURNING TOOLS
>>>
PAEG 060-109

- 内孔车刀复合式
  COMPOSITE INTERAL TURNING TOOL
  PAEG 062-077
- 内孔车刀螺钉式
  SCREW TYPE INTERAL TURNING TOOL
  PAEG 078-109

C 螺纹车刀
THREADING TURNING TOOL
>>>
PAEG 110-118

D 切槽(断)刀
GROOVING CUTTER
>>>
PAEG 119-155

E 走心机车刀
TURNING TOOL FOR CNC PRECISION AUTOMATIC LATHE
>>>
PAEG 156-169

F 钨钢车刀
TUNGSTEN STEEL TURNING TOOL
>>>
PAEG 170-182

G 车刀配件
TURNING TOOL ACCESSORIES
>>>
PAEG 183-196

- 合金刀垫·配件
  ALLOY SHIM ACCESSORIES
  PAEG 185-187
- 螺丝·配件
  SCREWS AND ACCESSORIES
  PAEG 188-192
- 压板·配件
  PRESSING PLATE AND ACCESSORIES
  PAEG 193-194
- 扳手·配件
  WRENCH AND ACCESSORIES
  PAEG 195-196

H 车床附件
LATHE ACCESSORIES
>>>
PAEG 197-206

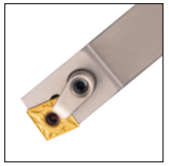
MCBN□75°


MCFN□91°


MCGN□91°

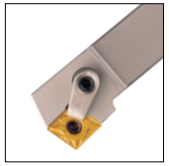
MCKN□75°

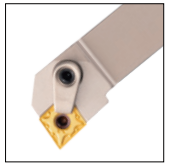
MCLN□95°


MCMNN50°


MCMNN-100 40°

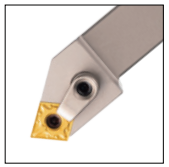
MCSN□45°


MDJN□93°

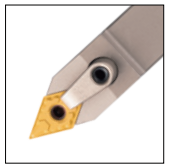
MDPNN62.5°


MDQN□107.5°

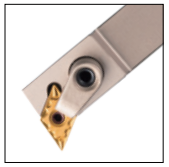
MDUN□95°

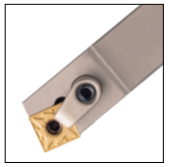
MSBN□75°

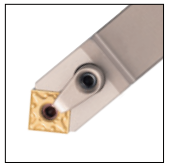
MSDNN45°

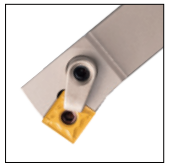
MSKN□75°

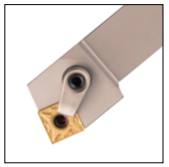
MSRN□75°

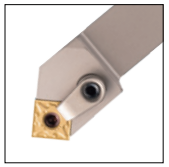
MSSN□45°


MTENN60°

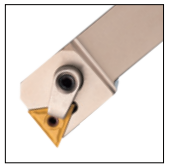
MTFN□91°

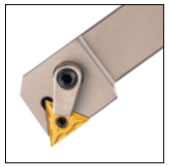
MTGN□91°

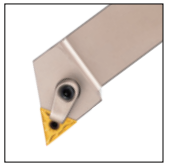
MTJN□93°


MTQN□105°

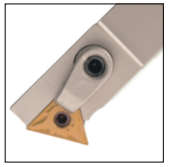
MTWN□60°


WTENN60°


WTJN□93°

外圆车刀 （复合式）

COMPOSITE
EXTERNAL TURNING TOOL


WTQN□105°


MVJN□93°

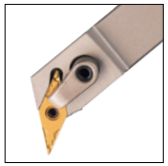
MVQN□117.5°


MVUN□95°

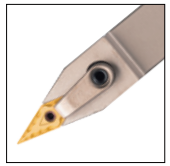
MVVNN72.5°


MWLN□95°

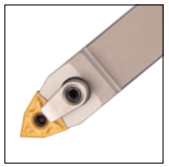
MWMNN50°


MWWN□50°


WWLN□95°

外圆车刀 （D型压板）

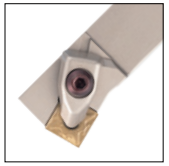
DSKN□75°

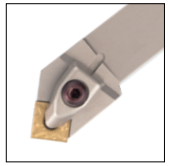
DSSN□45°

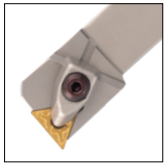
DTFN□91°


DTGN□91°

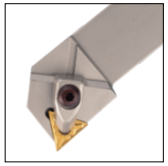
DTJN□93°


DVJN□93°


DVVNN72.5°


DWLN□95°

外圆车刀 （D型压板）

D-TYPE CLAMP
EXTERNAL TURNING TOOL

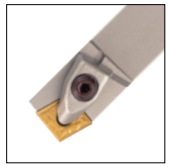
DCBN□75°


DCKN□75°

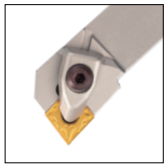
DCLN□95°


DCMNN50°


DCMNN-100 40°


DDJN□93°


DDPNN62.5°

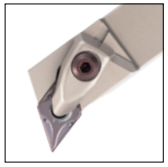
DDQN□107.5°

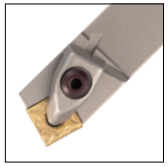
DSBN□75°

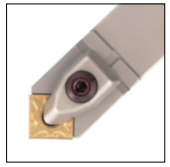
DSDNN45°

外圆车刀 （螺钉式）

TOP CIRCLE TURNING TOOL
COMPOSITE TYPE


SCAC□90°


SCBC□75°


SCFC□91°


SCGC□91°


SCKC□75°


SCLC□95°


SCMCN50°


SCMCN-100 40°


SDAC□90°


SDFC□91°

外圆车刀 （螺钉式）

TOP CIRCLE TURNING TOOL
COMPOSITE TYPE


SDJC□93°


SDNCN62.5°


SDQC□107.5°

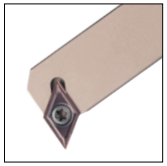
SDUC□95°

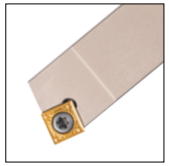
SSBC□75°


SSDCN45°


SSKC□75°


SSSC□45°


STFC□91°


STGC□91°


SVJC/B□93°


SVQC/B□117.5°


SVUC/B□95°

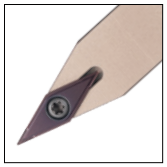
SVVC/BN72.5°


SWLC□95°


SRA□□


SRD□□


SRG□□

内孔车刀 （复合式）


MCKN□75°


MCLN□95°


MCWN□50°


MDQN□107.5°


MDUN□95°


MDWN□62.5°


MDZN□93°


MSKN□75°


MSSN□45°


MTFN□91°


MTJN□93°


MTLN□95°


MTQN□105°

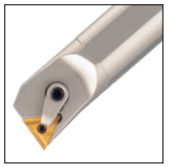
MTUN□95°

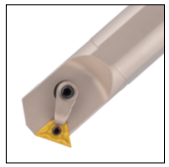
MTWN□60°


MVQN□117.5°


MVUN□95°


MVWN□72.5°


MVXN□96°


MVZN□93°


MWLN□95°


MWWN□50°


MW08□95°

内孔车刀 （D型压板）

D-TYPE CLAMP
INTERNAL TURNING TOOL

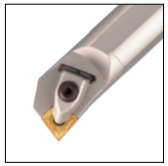
DCLN□95°

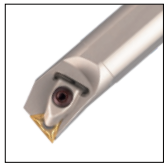
DTFN□91°

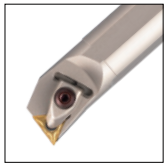
DTUN□95°

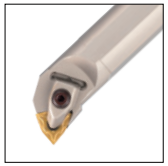
DWLN□95°

内孔车刀 （螺钉式）

SCREW TYPE
INTERAL TURNING TOOL

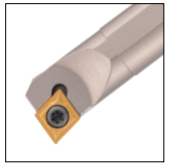
SCFC□91°


SCKC□75°

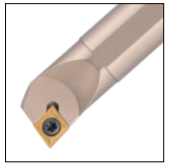
SCLC□95°


SCLC□-A 95°

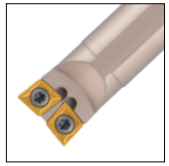
SCLC□-H 95°


SCWC□50°

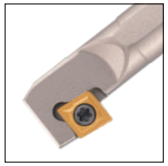
SCZC□93°


SDJC□93°


SDQC□107.5°

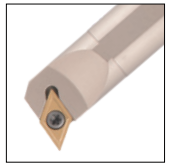
SDUC□95°

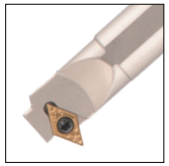
SDWC□62.5°


SDXC□96°


SDZC□93°


SSKC□75°

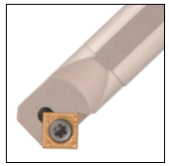
SSSC□45°

内孔车刀 （螺钉式）

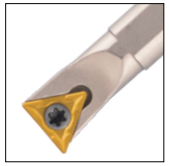
STF□□91°

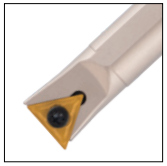
STFN□□91°

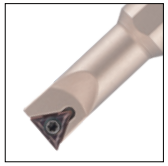
STF□□-A91°


STUB□95°

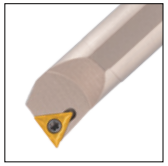
STUC□95°


STUN□95°

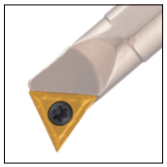
STQC□105°

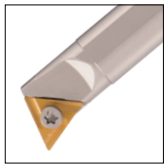
STQN□105°


STW□□60°

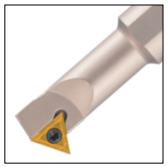
STW□□-A 60°

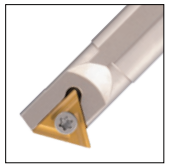
STWN□60°

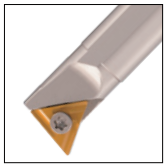
STLN□95°


SVJ□□93°


SVQ□□117.5°

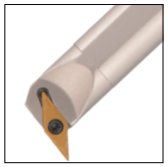
SVU□□95°

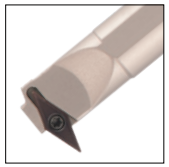
SVW□□72.5°


SVX□□96°


SVZ□□93°

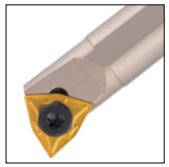
SWLN□95°

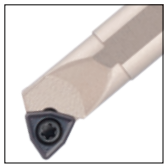
SWLC□95°


SWUB□93°

螺纹车刀

THREADING TURNING TOOL

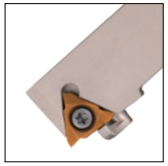
CTT□

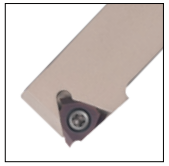
KTT□


CE□

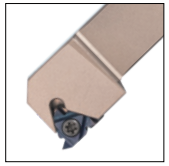
SE□

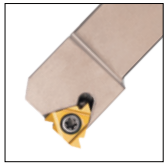
SE□-B

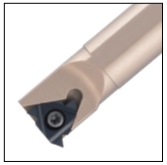
SN□

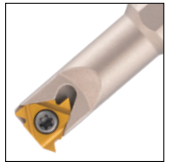
SN□-A16

切槽(断)刀

GROOVING CUTTER

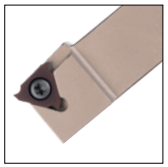
SGB□

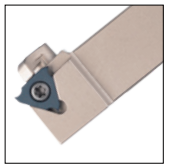
CGB□

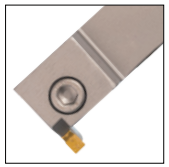
MGEV□

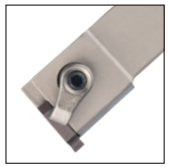
CTGFS□


KTGFS□


TTE□


KGM□

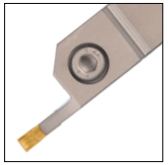
ZQ□


MGEH□

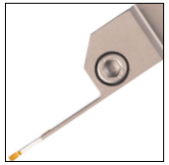
MGEH□-加长

切槽(断)刀


SNG□


SIGE□


MG-H□


MGIV□

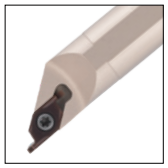
SGIVF□


SGB□


SGE□-D


B-SGE□-D

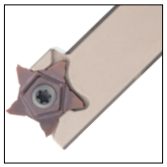
PCH□


MGAH


MGHH


MGHH□-加长


MGFV□


MFH□

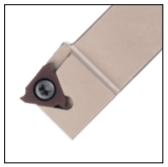
KTG□


CTGF□


S-KTGF□

切刀板


SPB

切刀板

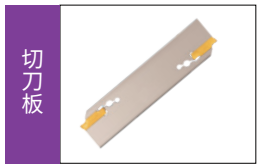
SMGB

走心机车刀

TURNING TOOL FOR CNC
PRECISION AUTOMATIC LATHE


SVJ□-JX


SCA□-JX

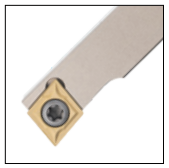
SCL□-JX


SDA□-JX


SDJ□-JX

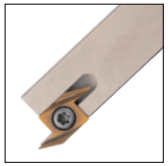
SABS□


CTP□

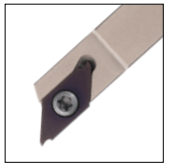
KTKF□


SE□-F


DS-SVU

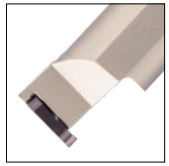
DS-KTGF

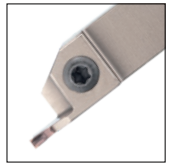
KGM□

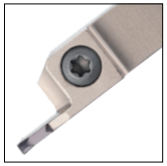
TTE□


MGEH□

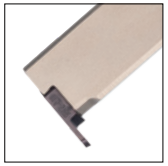
B-KTK□

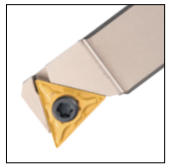
PTXN

钨钢车刀


MTFN□91°


MTUN□95°


MWLN□95°


MTWN□60°

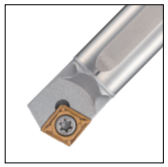
SCKC□75°


SCLC□95°


SDQC□107.5°

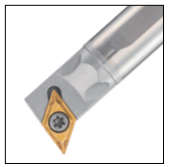
SDUC□95°


STF□91°


STU□95°


SVJ□□93°


SVX□□96°

车刀配件（合金刀垫/螺丝/压板/扳手）

TURNING TOOL ACCESSORIES

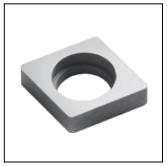
C型刀垫

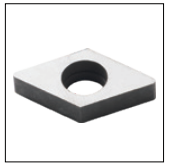
D型刀垫


S型刀垫

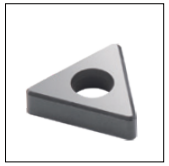
T型刀垫

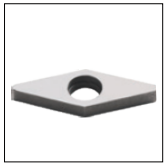
V型刀垫

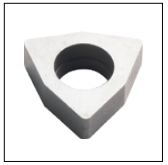
W型刀垫

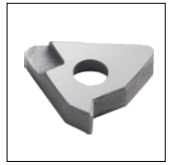
螺纹刀垫


梅花螺丝


中心销钉


中心销钉


中心销钉


槽刀螺丝


双头螺栓


侧钉


压板螺丝


螺丝


D型压板螺丝


D型刀垫螺丝

车刀配件（合金刀垫/螺丝/压板/扳手）


M型压板


W型压板

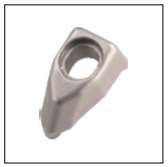
D型压板


旗型梅花扳手


十字梅花扳手


内六角扳手


切槽刀板扳手

机床附件

MACHINE TOOL ACCESSORIES


莫式侧固刀柄


拉钉

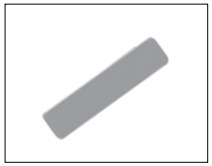
车床刀架垫片


切刀座

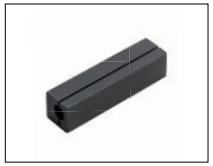
方形刀套


锥柄圆刀套


圆形刀套


小径刀套

外圆车刀

EXTERNAL TURNING TOOLS

>>>

- 外圆车刀复合式
  COMPOSITE EXTERNAL TURNING TOOL
- 外圆车刀螺钉式
  SCREW TYPE EXTERNAL TURNING TOOL

可转位车刀型号编制说明

M	C	L	N	R	25	25	M	12
1	2	3	4	5	6	7	8	9

1压紧方式

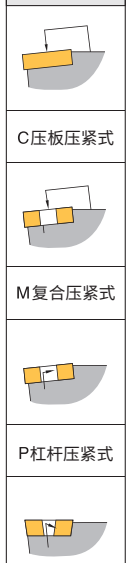

C压板压紧式

M复合压紧式

P杠杆压紧式

S螺钉压紧式

2刀片形状

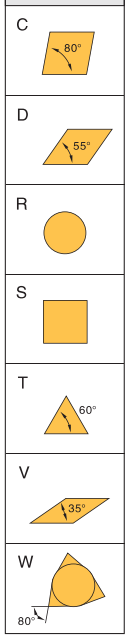

3刀具形式与主偏角

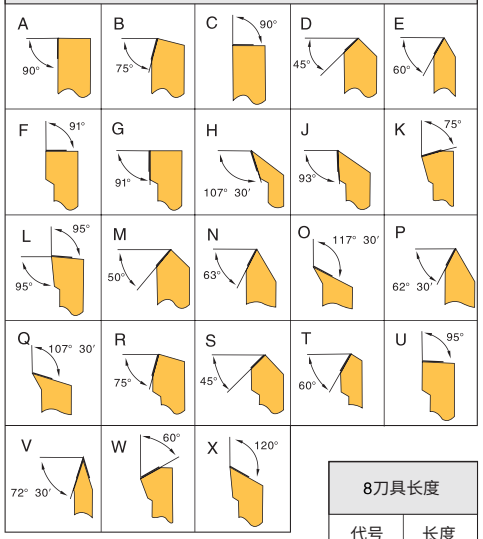

4刀片后角

B	5°
C	7°
D	15°
E	20°
N	0°
P	11°

5切削方向

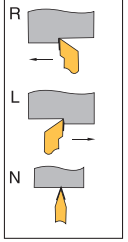

6刀尖高度

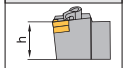

只标注到整数
例：h=8mm,标为08

7刀体宽度

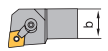

例：b=8mm,标为08

8刀具长度

代号	长度
E	70
F	80
H	100
K	125
M	150
P	170
Q	180
R	200
S	250
T	300

9切削刃长

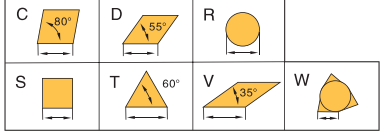

外圆车刀复合式
COMPOSITE EXTERNAL TURNING TOOL

□CBN□

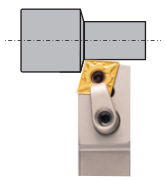

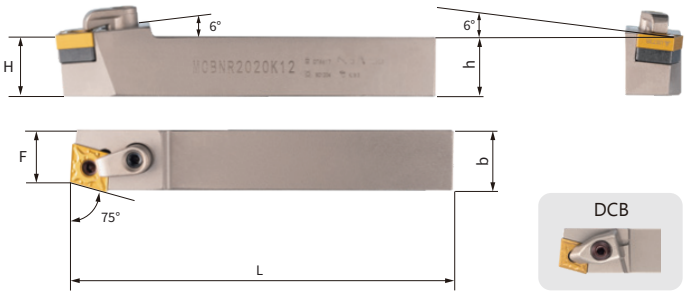

DCB

型号Model		尺寸Size (mm)					刀片 Blade	刀垫 Shim	中心销 Center Pin	扳手 Wrench	压板 Platen	双头螺栓 Double Screw	扳手 Wrench
左刀 Left	右刀 Right	h	b	H	F	L							
MCBNL1616H12	MCBNR1616H12	16	16	16	13.5	100	CN□□ 1204□□	MC1204	CTM617	L3	HL1813	ML0625	L3
MCBNL2020K12	MCBNR2020K12	20	20	20	17	125							
MCBNL2525M12	MCBNR2525M12	25	25	25	22	150							
MCBNL3232P12	MCBNR3232P12	32	32	32	29	170							
MCBNL4040R12	MCBNR4040R12	40	40	40	37	200							
MCBNL2525M16	MCBNR2525M16	25	25	25	22	150	CN□□ 1606□□	MC1604	CTM0822	L3	HL2217	ML0830	L4
MCBNL3232P16	MCBNR3232P16	32	32	32	29	170							
MCBNL4040R16	MCBNR4040R16	40	40	40	37	200							
MCBNL3232P19	MCBNR3232P19	32	32	32	28	170	CN□□ 1906□□	MC1904	CTM1022	L4	HL2217	ML0830	L4
MCBNL4040R19	MCBNR4040R19	40	40	40	36	200							

型号Model		尺寸Size (mm)						刀片 Blade	刀垫 Shim	刀垫螺钉 Shim Screw	压板 Platen	压板螺钉 Platen Screw	扳手 Wrench
左刀 Left	右刀 Right	h	b	L	L_1	H	F						
DCBNL2020K12	DCBNR2020K12	20	20	125	32	20	17	CN□□ 1204□□	MC1204	D6×10	D5240	DM6×21	L3
DCBNL2525M12	DCBNR2525M12	25	25	150	32	25	22						
DCBNL3232P12	DCBNR3232P12	32	32	170	32	32	29						

MCFN□

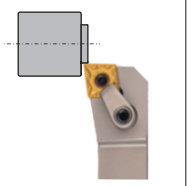

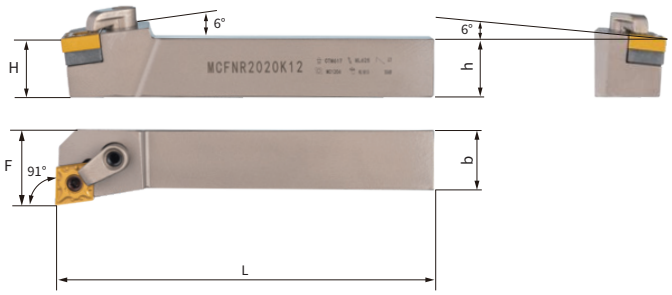

型号Model		尺寸Size (mm)					刀片 Blade	刀垫 Shim	中心销 Center Pin	扳手 Wrench	压板 Platen	双头螺栓 Double Screw	扳手 Wrench
左刀 Left	右刀 Right	h	b	H	F	L							
MCFNL2020K12	MCFNR2020K12	20	20	20	25	125	CN□□ 1204□□	MC1204	CTM617	L3	HL1813	ML0625	L3
MCFNL2525M12	MCFNR2525M12	25	25	25	32	150							
MCFNL3232P12	MCFNR3232P12	32	32	32	40	170							
MCFNL3232P16	MCFNR3232P16	32	32	32	40	170	CN□□ 1606□□	MC1604	CTM0822	L3	HL2217	ML0830	L4
MCFNL3232P19	MCFNR3232P19	32	32	32	40	170	CN□□ 1906□□	MC1904	CTM1022	L4	HL2217	ML0830	L4

MCGN□

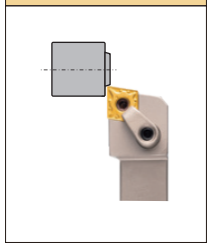

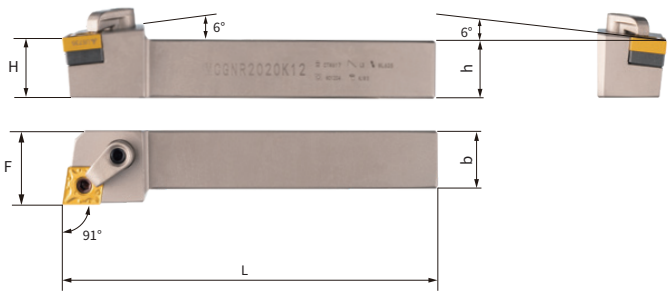

型号Model		尺寸Size (mm)					刀片 Blade	刀垫 Shim	中心销 Center Pin	扳手 Wrench	压板 Platen	双头螺栓 Double Screw	扳手 Wrench
左刀 Left	右刀 Right	h	b	H	F	L							
MCGNL1616H12	MCGNR1616H12	16	16	16	20	100	CN□□ 1204□□	MC1204	CTM617	L3	HL1813	ML0625	L3
MCGNL2020K12	MCGNR2020K12	20	20	20	25	125							
MCGNL2525M12	MCGNR2525M12	25	25	25	32	150							
MCGNL3232P12	MCGNR3232P12	32	32	32	40	170							
MCGNL4040R12	MCGNR4040R12	40	40	40	50	200							
MCGNL2525M16	MCGNR2525M16	25	25	25	32	150	CN□□ 1606□□	MC1604	CTM0822	L3	HL2217	ML0830	L4
MCGNL3232P16	MCGNR3232P16	32	32	32	40	170							
MCGNL4040R16	MCGNR4040R16	40	40	40	50	200							
MCGNL2525M19	MCGNR2525M19	25	25	25	32	150	CN□□ 1906□□	MC1904	CTM1022	L4	HL2217	ML0830	L4
MCGNL3232P19	MCGNR3232P19	32	32	32	40	170							
MCGNL4040R19	MCGNR4040R19	40	40	40	50	200							

外圆车刀复合式
COMPOSITE EXTERNAL TURNING TOOL

□CKN□

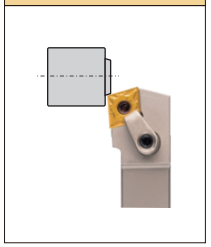

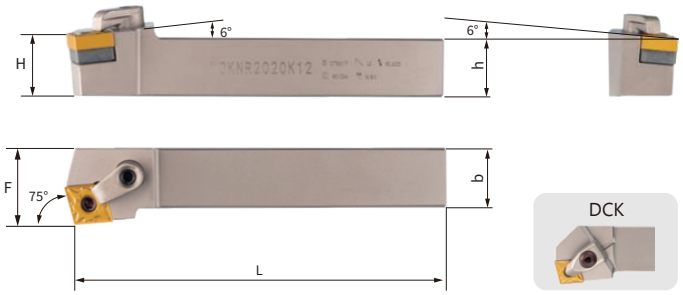

型号Model		尺寸Size (mm)					刀片 Blade	刀垫 Shim	中心销 Center Pin	扳手 Wrench	压板 Platen	双头螺栓 Double Screw	扳手 Wrench
左刀 Left	右刀 Right	h	b	H	F	L							
MCKNL1616H12	MCKNR1616H12	16	16	16	20	100	CN□□ 1204□□	MC1204	CTM617	L3	HL1813	ML0625	L3
MCKNL2020K12	MCKNR2020K12	20	20	20	25	125							
MCKNL2525M12	MCKNR2525M12	25	25	25	32	150							
MCKNL3232P12	MCKNR3232P12	32	32	32	40	170							
MCKNL4040R12	MCKNR4040R12	40	40	40	50	200							
MCKNL2525M16	MCKNR2525M16	25	25	25	32	150	CN□□ 1606□□	MC1604	CTM0822	L3	HL2217	ML0830	L4
MCKNL3232P16	MCKNR3232P16	32	32	32	40	170							
MCKNL4040R16	MCKNR4040R16	40	40	40	50	200							
MCKNL3232P19	MCKNR3232P19	32	32	32	40	170	CN□□ 1906□□	MC1904	CTM1022	L4	HL2217	ML0830	L4
MCKNL4040R19	MCKNR4040R19	40	40	40	50	200							

型号Model		尺寸Size (mm)						刀片 Blade	刀垫 Shim	刀垫螺钉 Shim Screw	压板 Platen	压板螺钉 Platen Screw	扳手 Wrench
左刀 Left	右刀 Right	h	b	L	L_1	H	F						
DCKNL2020K12	DCKNR2020K12	20	20	125	32	20	25	CN□□ 1204□□	MC1204	D6×10	D5240	DM6×21	L3
DCKNL2525M12	DCKNR2525M12	25	25	150	32	25	32						
DCKNL3232P12	DCKNR3232P12	32	32	170	32	32	40						

□CLN□

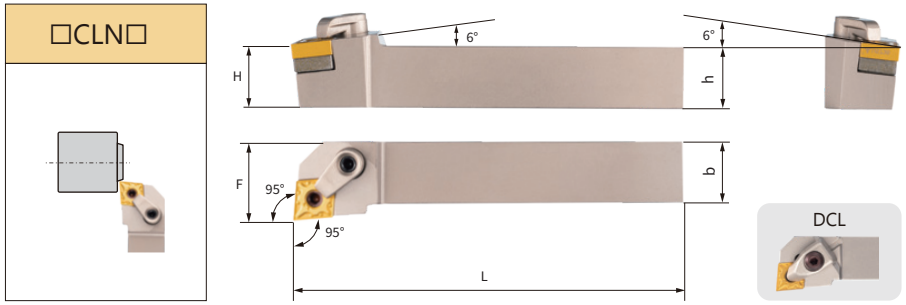

型号Model		尺寸Size (mm)					刀片 Blade	刀垫 Shim	中心销 Center Pin	扳手 Wrench	压板 Platen	双头螺栓 Double Screw	扳手 Wrench
左刀 Left	右刀 Right	h	b	H	F	L							
MCLNL1616H12	MCLNR1616H12	16	16	16	20	100	CN□□ 1204□□	MC1204	CTM617	L3	HL1813	ML0625	L3
MCLNL2020K12	MCLNR2020K12	20	20	20	25	125							
MCLNL2525M12	MCLNR2525M12	25	25	25	32	150							
MCLNL3232P12	MCLNR3232P12	32	32	32	40	170							
MCLNL4040R12	MCLNR4040R12	40	40	40	50	200							
MCLNL2525M16	MCLNR2525M16	25	25	25	32	150	CN□□ 1606□□	MC1604	CTM0822	L3	HL2217	ML0830	L4
MCLNL3232P16	MCLNR3232P16	32	32	32	40	170							
MCLNL4040R16	MCLNR4040R16	40	40	40	50	200							
MCLNL2525M19	MCLNR2525M19	25	25	25	32	150	CN□□ 1906□□	MC1904	CTM1022	L4	HL2217	ML0830	L4
MCLNL3232P19	MCLNR3232P19	32	32	32	40	170							
MCLNL4040R19	MCLNR4040R19	40	40	40	50	200							

型号Model		尺寸Size (mm)						刀片 Blade	刀垫 Shim	刀垫螺钉 Shim Screw	压板 Platen	压板螺钉 Platen Screw	扳手 Wrench
左刀 Left	右刀 Right	h	b	L	L_1	H	F						
DCLNL1616H12	DCLNR1616H12	16	16	100	32	16	20	CN□□ 1204□□	MC1204	D6×10	D5240	DM6×21	L3
DCLNL2020K12	DCLNR2020K12	20	20	125	32	20	25						
DCLNL2525M12	DCLNR2525M12	25	25	150	32	25	32						
DCLNL3232P12	DCLNR3232P12	32	32	170	32	32	40						

□CMNN

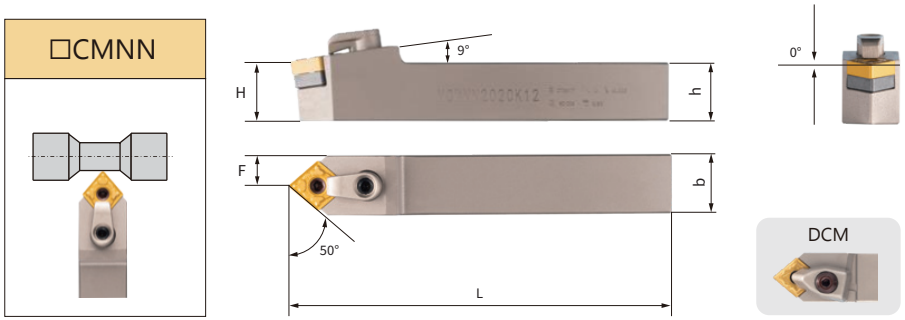

型号Model	尺寸Size (mm)					刀片 Blade	刀垫 Shim	中心销 Center Pin	扳手 Wrench	压板 Platen	双头螺栓 Double Screw	扳手 Wrench
	h	b	H	F	L							
MCMNN1616H12	16	16	16	8	100	CN□□ 1204□□	MC1204	CTM617	L3	HL1813	ML0625	L3
MCMNN2020K12	20	20	20	10	125							
MCMNN2525M12	25	25	25	12.5	150							
MCMNN3232P12	32	32	32	16	170							
MCMNN4040R12	40	40	40	20	200							
MCMNN2525M16	25	25	25	12.5	150	CN□□ 1606□□	MC1604	CTM0822	L3	HL2217	ML0830	L4
MCMNN3232P16	32	32	32	16	170							
MCMNN4040R16	40	40	40	20	200							
MCMNN3232P19	32	32	32	16	170	CN□□ 1906□□	MC1904	CTM1022	L4	HL2217	ML0830	L4
MCMNN4040R19	40	40	40	20	200							

型号Model	尺寸Size (mm)						刀片 Blade	刀垫 Shim	刀垫螺钉 Shim Screw	压板 Platen	压板螺钉 Platen Screw	扳手 Wrench
	h	b	L	L_1	H	F						
DCMNN2020K12	20	20	125	32	20	10	CN□□1204□□	MC1204	D6×10	D5240	DM6×21	L3
DCMNN2525M12	25	25	150	32	25	12.5						
DCMNN3232P12	32	32	170	32	32	16						

□CMNN-100

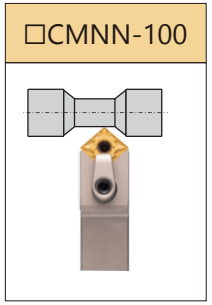

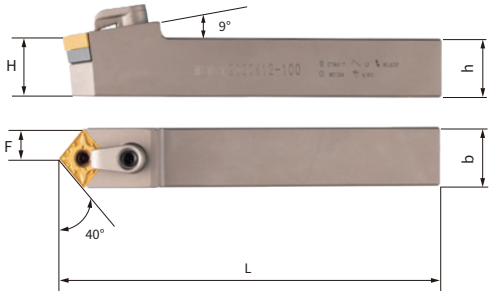

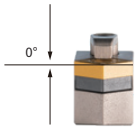

DCM-100

型号Model	尺寸Size (mm)					刀片 Blade	刀垫 Shim	中心销 Center Pin	扳手 Wrench	压板 Platen	双头螺栓 Double Screw	扳手 Wrench
	h	b	H	F	L							
MCMNN2020K12-100	20	20	20	10	125	CN□□ 1204□□	MC1204	CTM617	L3	HL1813	ML0625	L3
MCMNN2525M12-100	25	25	25	12.5	150							
MCMNN3232P12-100	32	32	32	16	170							
MCMNN4040R12-100	40	40	40	20	200							
MCMNN2525M16-100	25	25	25	12.5	150	CN□□ 1606□□	MC1604	CTM0822	L3	HL2217	ML0830	L4
MCMNN3232P16-100	32	32	32	16	170							
MCMNN4040R16-100	40	40	40	20	200							
MCMNN3232P19-100	32	32	32	16	170	CN□□ 1906□□	MC1904	CTM1022	L4	HL2217	ML0830	L4
MCMNN4040R19-100	40	40	40	20	200							

型号Model	尺寸Size (mm)						刀片 Blade	刀垫 Shim	刀垫螺钉 Shim Screw	压板 Platen	压板螺钉 Platen Screw	扳手 Wrench
	h	b	L	L_1	H	F						
DCMNN2020K12-100	20	20	125	32	20	10	CN□□1204□□	MC1204	D6×10	D5240	DM6×21	L3
DCMNN2525M12-100	25	25	150	32	25	12.5						
DCMNN3232P12-100	32	32	170	32	32	16						

MCSN□

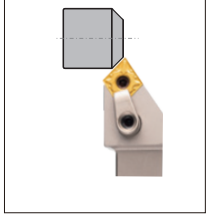

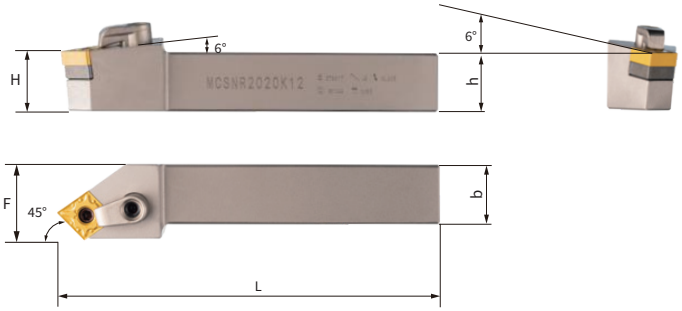

型号Model		尺寸Size (mm)					刀片 Blade	刀垫 Shim	中心销 Center Pin	扳手 Wrench	压板 Platen	双头螺栓 Double Screw	扳手 Wrench
左刀 Left	右刀 Right	h	b	H	F	L							
MCSNL2020K12	MCSNR2020K12	20	20	20	25	125	CN□□ 1204□□	MC1204	CTM617	L3	HL1813	ML0625	L3
MCSNL2525M12	MCSNR2525M12	25	25	25	32	150							

□DJN□

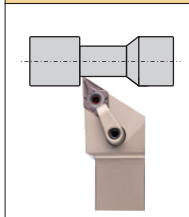

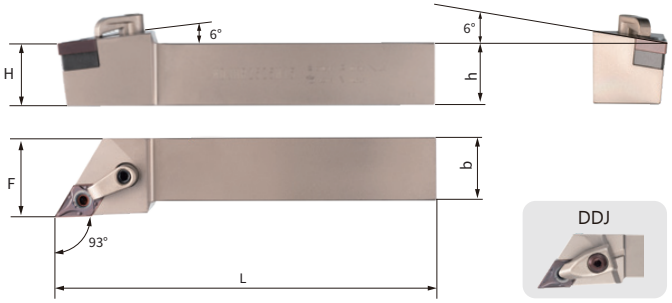

DDJ

型号Model		尺寸Size (mm)					刀片 Blade	刀垫 Shim	中心销 Center Pin	扳手 Wrench	压板 Platen	双头螺栓 Double Screw	扳手 Wrench
左刀 Left	右刀 Right	h	b	H	F	L							
MDJNL1616H11	MDJNR1616H11	16	16	16	20	100	DN□□ 1104□□	MD1103	CTM513	L2	HL1813	ML0625	L3
MDJNL2020K11	MDJNR2020K11	20	20	20	25	125							
MDJNL2525M11	MDJNR2525M11	25	25	25	32	150							
MDJNL2020K15	MDJNR2020K15	20	20	20	25	125	DN□□ 1504□□	MD1506	CTM619	L3	HL2113	ML0625	L3
MDJNL2525M15	MDJNR2525M15	25	25	25	32	150							
MDJNL3232P15	MDJNR3232P15	32	32	32	40	170	DN□□ 1506□□	MD1504					
MDJNL4040R15	MDJNR4040R15	40	40	40	50	200							

型号Model		尺寸Size (mm)						刀片 Blade	刀垫 Shim	刀垫螺钉 Shim Screw	压板 Platen	压板螺钉 Platen Screw	扳手 Wrench
左刀 Left	右刀 Right	h	b	L	L_1	H	F						
DDJNL1616K11	DDJNR1616K11	16	16	100	32	16	20	DN□□ 1104□□	MD1103	D5×9	D3220	DM6×21	L3
DDJNL2020K11	DDJNR2020K11	20	20	125	32	20	25						
DDJNL2525M11	DDJNR2525M11	25	25	150	32	25	32						
DDJNL2020K15	DDJNR2020K15	20	20	125	32	20	25	DN□□ 1504□□	MD1506	D6×10	D5270	DM6×21	L3
DDJNL2525M15	DDJNR2525M15	25	25	150	35	25	32						
DDJNL3232P15	DDJNR3232P15	32	32	170	35	32	40	DN□□ 1506□□	MD1504				

□DPNN

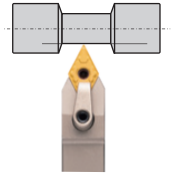

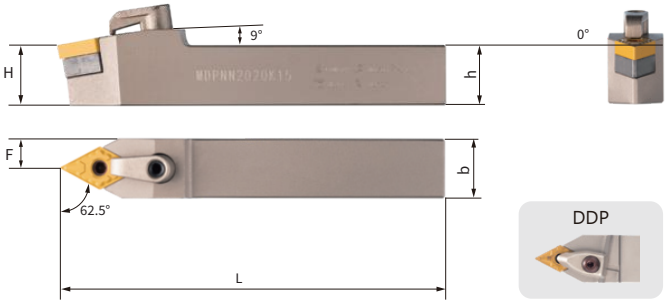

DDP

型号Model	尺寸Size (mm)					刀片 Blade	刀垫 Shim	中心销 Center Pin	扳手 Wrench	压板 Platen	双头螺栓 Double Screw	扳手 Wrench
	h	b	H	F	L							
MDPNN1616H11	16	16	16	8	100	DN□□ 1104□□	MD1103	CTM513	L2	HL1813	ML0625	L3
MDPNN2020K11	20	20	20	10	125							
MDPNN2525M11	25	25	25	12.5	150							
MDPNN2020K15	20	20	20	10	125	DN□□ 1504□□	MD1506	CTM619	L3	HL2113	ML0625	L3
MDPNN2525M15	25	25	25	12.5	150							
MDPNN3232P15	32	32	32	16	170	DN□□ 1506□□	MD1504					
MDPNN4040R15	40	40	40	20	200							

型号Model	尺寸Size (mm)						刀片 Blade	刀垫 Shim	刀垫螺钉 Shim Screw	压板 Platen	压板螺钉 Platen Screw	扳手 Wrench
	h	b	L	L_1	H	F						
DDPNN1616K11	16	16	100	32	16	8	DN□□1104□□	MD1103	D5×9	D3220	DM6×21	L3
DDPNN2020K11	20	20	125	32	20	10						
DDPNN2525M11	25	25	150	32	25	12.5						
DDPNN2020K15	20	20	125	35	20	10	DN□□1504□□ DN□□1506□□	MD1506 MD1504	D6×10	D5270	DM6×21	L3
DDPNN2525M15	25	25	150	35	25	12.5						
DDPNN3232P15	32	32	170	35	32	16						

□DQN□

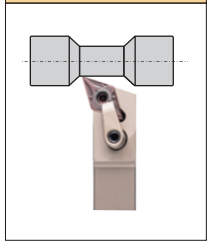

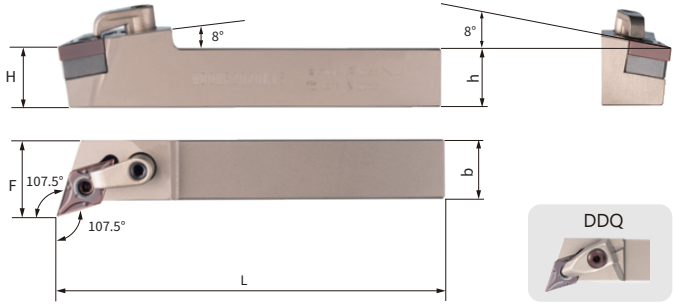

型号Model		尺寸Size (mm)					刀片 Blade	刀垫 Shim	中心销 Center Pin	扳手 Wrench	压板 Platen	双头螺栓 Double Screw	扳手 Wrench
左刀 Left	右刀 Right	h	b	H	F	L							
MDQNL1616H11	MDQNR1616H11	16	16	16	20	100	DN□□ 1104□□	MD1103	CTM513	L2	HL1813	ML0625	L3
MDQNL2020K11	MDQNR2020K11	20	20	20	25	125							
MDQNL2525M11	MDQNR2525M11	25	25	25	32	150							
MDQNL2020K15	MDQNR2020K15	20	20	20	25	125	DN□□ 1504□□	MD1506	CTM619	L3	HL2113	ML0625	L3
MDQNL2525M15	MDQNR2525M15	25	25	25	32	150	DN□□ 1506□□	MD1504					
MDQNL3232P15	MDQNR3232P15	32	32	32	40	170							

型号Model		尺寸Size (mm)						刀片 Blade	刀垫 Shim	刀垫螺钉 Shim Screw	压板 Platen	压板螺钉 Platen Screw	扳手 Wrench
左刀 Left	右刀 Right	h	b	L	L_1	H	F						
DDQNL2020K15	DDQNR2020K15	20	20	125	32	20	25	DN□□ 1504□□	MD1506	D6×10	D5270	DM6×21	L3
DDQNL2525M15	DDQNR2525M15	25	25	150	32	25	32	DN□□ 1506□□	MD1504				
DDQNL3232P15	DDQNR3232P15	32	32	170	32	32	40						

MDUN□

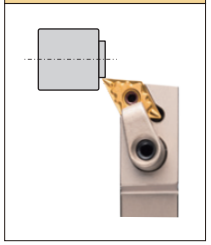

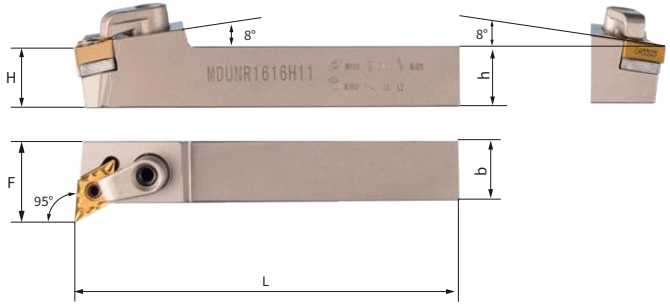

型号Model		尺寸Size (mm)					刀片 Blade	刀垫 Shim	中心销 Center Pin	扳手 Wrench	压板 Platen	双头螺栓 Double Screw	扳手 Wrench
左刀 Left	右刀 Right	h	b	H	F	L							
MDUNL1616H11	MDUNR1616H11	16	16	16	20	100	DN□□ 1104□□	MD1103	CTM513	L2	HL1813	ML0625	L3
MDUNL2020K11	MDUNR2020K11	20	20	20	25	125							
MDUNL2525M11	MDUNR2525M11	25	25	25	32	150							
MDUNL2020K15	MDUNR2020K15	20	20	20	25	125	DN□□ 1504□□	MD1506	CTM619	L3	HL2113	ML0625	L3
MDUNL2525M15	MDUNR2525M15	25	25	25	32	150	DN□□ 1506□□	MD1504					

□SBN□

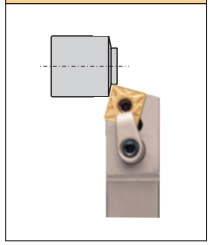

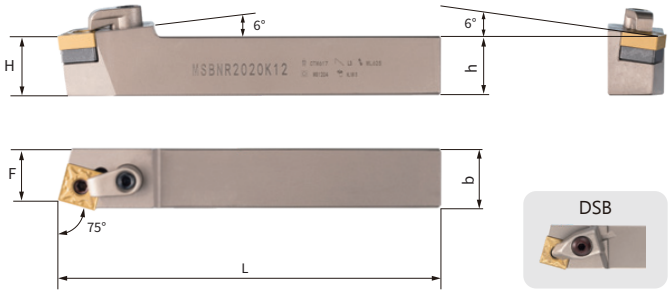

DSB

型号Model		尺寸Size (mm)					刀片 Blade	刀垫 Shim	中心销 Center Pin	扳手 Wrench	压板 Platen	双头螺栓 Double Screw	扳手 Wrench
左刀 Left	右刀 Right	h	b	H	F	L							
MSBNL1616H12	MSBNR1616H12	16	16	16	13.5	100	SN□□ 1204□□	MS1204	CTM617	L3	HL1813	ML0625	L3
MSBNL2020K12	MSBNR2020K12	20	20	20	17	125							
MSBNL2525M12	MSBNR2525M12	25	25	25	22	150							
MSBNL3232P12	MSBNR3232P12	32	32	32	25	170							
MSBNL4040R12	MSBNR4040R12	40	40	40	37	200							
MSBNL2020K15	MSBNR2020K15	20	20	20	17	125	SN□□ 1506□□	MS1504	CTM0822	L3	HL2217	ML0830	L4
MSBNL2525M15	MSBNR2525M15	25	25	25	22	150							
MSBNL3232P15	MSBNR3232P15	32	32	32	29	170							
MSBNL4040R15	MSBNR4040R15	40	40	40	37	200							
MSBNL3232P19	MSBNR3232P19	32	32	32	28	170	SN□□ 1906□□	MS1904	CTM1022	L4	HL2217	ML0830	L4
MSBNL4040R19	MSBNR4040R19	40	40	40	36	200							

型号Model		尺寸Size (mm)						刀片 Blade	刀垫 Shim	刀垫螺钉 Shim Screw	压板 Platen	压板螺钉 Platen Screw	扳手 Wrench
左刀 Left	右刀 Right	h	b	L	L_1	H	F						
DSBNL2020K12	DSBNR2020K12	20	20	125	32	20	17	SN□□ 1204□□	MS1204	D6×10	D5240	DM6×21	L3
DSBNL2525M12	DSBNR2525M12	25	25	150	32	25	22						
DSBNL3232P12	DSBNR3232P12	32	32	170	32	32	29						

□SDNN

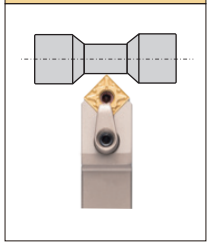

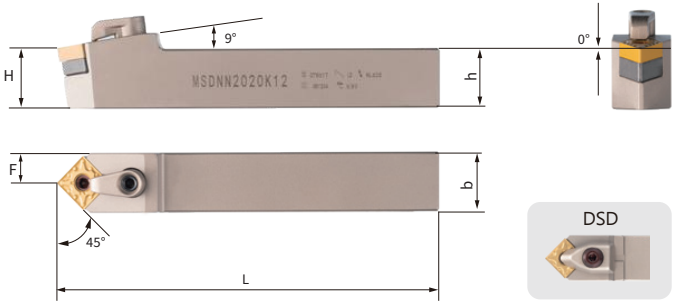

DSD

型号Model	尺寸Size (mm)					刀片 Blade	刀垫 Shim	中心销 Center Pin	扳手 Wrench	压板 Platen	双头螺栓 Double Screw	扳手 Wrench
	h	b	H	F	L							
MSDNN1616H12	16	16	16	8	100	SN□□ 1204□□	MS1204	CTM617	L3	HL1813	ML0625	L3
MSDNN2020K12	20	20	20	10	125							
MSDNN2525M12	25	25	25	12.5	150							
MSDNN3232P12	32	32	32	16	170							
MSDNN2525M15	25	25	25	12.5	150	SN□□ 1506□□	MS1504	CTM0822	L3	HL2217	ML0830	L4
MSDNN3232P15	32	32	32	16	170							
MSDNN3232P19	32	32	32	16	170	SN□□ 1906□□	MS1904	CTM1022	L4	HL2217	ML0830	L4
MSDNN4040R19	40	40	40	20	200							

型号Model	尺寸Size (mm)						刀片 Blade	刀垫 Shim	刀垫螺钉 Shim Screw	压板 Platen	压板螺钉 Platen Screw	扳手 Wrench
	h	b	L	L_1	H	F						
DSDNN1616H12	16	16	100	34	16	8	SN□□1204□□	MS1204	D6×10	D5240	DM6×21	L3
DSDNN2020K12	20	20	125	34	20	10						
DSDNN2525M12	25	25	150	34	25	12.5						
DSDNN3232P12	32	32	170	34	32	16						

□SKN□

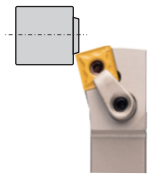

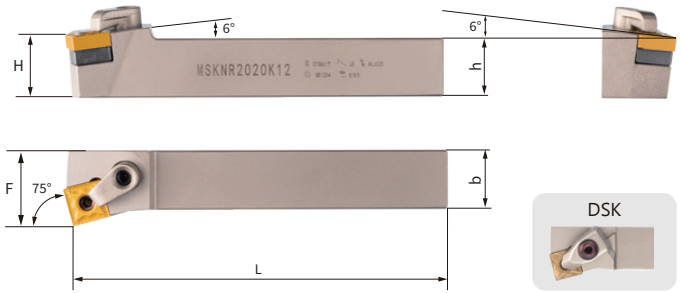

DSK

型号Model		尺寸Size (mm)					刀片 Blade	刀垫 Shim	中心销 Center Pin	扳手 Wrench	压板 Platen	双头螺栓 Double Screw	扳手 Wrench
左刀 Left	右刀 Right	h	b	H	F	L							
MSKNL1616H12	MSKNR1616H12	16	16	16	20	100	SN□□ 1204□□	MS1204	CTM617	L3	HL1813	ML0625	L3
MSKNL2020K12	MSKNR2020K12	20	20	20	25	125							
MSKNL2525M12	MSKNR2525M12	25	25	25	32	150							
MSKNL3232P12	MSKNR3232P12	32	32	32	40	170							
MSKNL2525M15	MSKNR2525M15	25	25	25	32	150	SN□□ 1506□□	MS1504	CTM0822	L3	HL2217	ML0830	L4
MSKNL3232P15	MSKNR3232P15	32	32	32	40	170							
MSKNL3232P19	MSKNR3232P19	32	32	32	40	170	SN□□ 1906□□	MS1904	CTM1022	L4	HL2217	ML0830	L4
MSKNL4040R19	MSKNR4040R19	40	40	40	50	200							

型号Model		尺寸Size (mm)						刀片 Blade	刀垫 Shim	刀垫螺钉 Shim Screw	压板 Platen	压板螺钉 Platen Screw	扳手 Wrench
左刀 Left	右刀 Right	h	b	L	L_1	H	F						
DSKNL2020K12	DSKNR2020K12	20	20	125	26	20	25	SN□□ 1204□□	MS1204	D6×10	D5240	DM6×21	L3
DSKNL2525M12	DSKNR2525M12	25	25	150	26	25	32						
DSKNL3232P12	DSKNR3232P12	32	32	170	26	32	40						

MSRN□

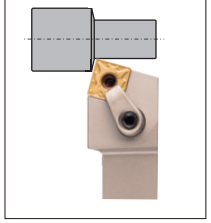

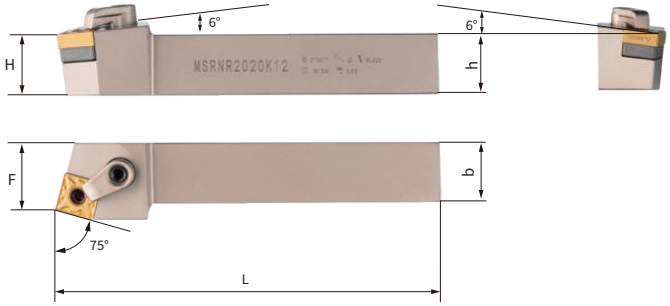

型号Model		尺寸Size (mm)					刀片 Blade	刀垫 Shim	中心销 Center Pin	扳手 Wrench	压板 Platen	双头螺栓 Double Screw	扳手 Wrench
左刀 Left	右刀 Right	h	b	H	F	L							
MSRNL2020K12	MSRNR2020K12	20	20	20	21.5	125	SN□□ 1204□□	MS1204	CTM617	L3	HL1813	ML0625	L3
MSRNL2525M12	MSRNR2525M12	25	25	25	28.5	150							
MSRNL3232P12	MSRNR3232P12	32	32	32	36.5	170							

□SSN□

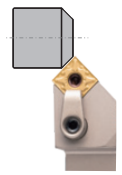

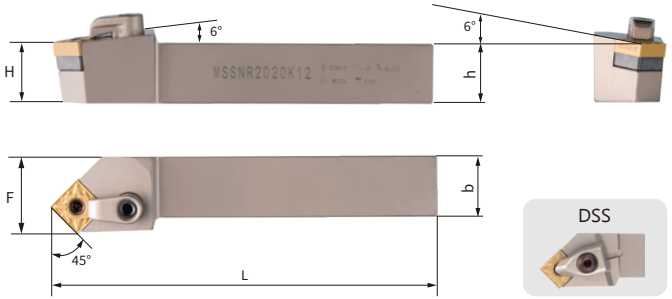

DSS

型号Model		尺寸Size (mm)					刀片 Blade	刀垫 Shim	中心销 Center Pin	扳手 Wrench	压板 Platen	双头螺栓 Double Screw	扳手 Wrench
左刀 Left	右刀 Right	h	b	H	F	L							
MSSNL1616H12	MSSNR1616H12	16	16	16	20	100	SN□□ 1204□□	MS1204	CTM617	L3	HL1813	ML0625	L3
MSSNL2020K12	MSSNR2020K12	20	20	20	25	125							
MSSNL2525M12	MSSNR2525M12	25	25	25	32	150							
MSSNL3232P12	MSSNR3232P12	32	32	32	40	170							
MSSNL4040R12	MSSNR4040R12	40	40	40	50	200							
MSSNL2525M15	MSSNR2525M15	25	25	25	32	150	SN□□ 1506□□	MS1504	CTM0822	L3	HL2217	ML0830	L4
MSSNL3232P15	MSSNR3232P15	32	32	32	40	170							
MSSNL4040R15	MSSNR4040R15	40	40	40	50	200							
MSSNL3232P19	MSSNR3232P19	32	32	32	40	170	SN□□ 1906□□	MS1904	CTM1022	L4	HL2217	ML0830	L4
MSSNL4040R19	MSSNR4040R19	40	40	40	50	200							

型号Model		尺寸Size (mm)						刀片 Blade	刀垫 Shim	刀垫螺钉 Shim Screw	压板 Platen	压板螺钉 Platen Screw	扳手 Wrench
左刀 Left	右刀 Right	h	b	L	L_1	H	F						
DSSNL2020K12	DSSNR2020K12	20	20	125	26	20	25	SN□□ 1204□□	MS1204	D6×10	D5240	DM6×21	L3
DSSNL2525M12	DSSNR2525M12	25	25	150	26	25	32						
DSSNL3232P12	DSSNR3232P12	32	32	170	26	32	40						

外圆车刀复合式
COMPOSITE EXTERNAL TURNING TOOL

MTENN

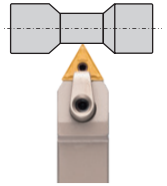

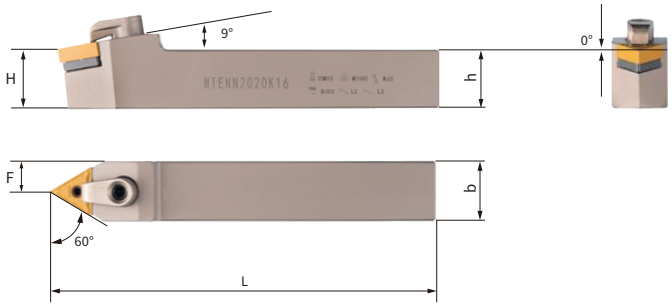

型号Model	尺寸Size (mm)					刀片 Blade	刀垫 Shim	中心销 Center Pin	扳手 Wrench	压板 Platen	双头螺栓 Double Screw	扳手 Wrench
	h	b	H	F	L							
MTENN1616H16	16	16	16	8	100	TN□□ 1604□□	MT1603	CTM513	L2	HL1813	ML0625	L3
MTENN2020K16	20	20	20	10	125							
MTENN2525M16	25	25	25	12.5	150							
MTENN3232P16	32	32	32	16	170							
MTENN2525M22	25	25	25	12.5	150	TN□□ 2204□□	MT2204	CTM617	L3	HL1917	ML0830	L4
MTENN3232P22	32	32	32	16	170							

□TFN□

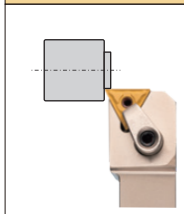

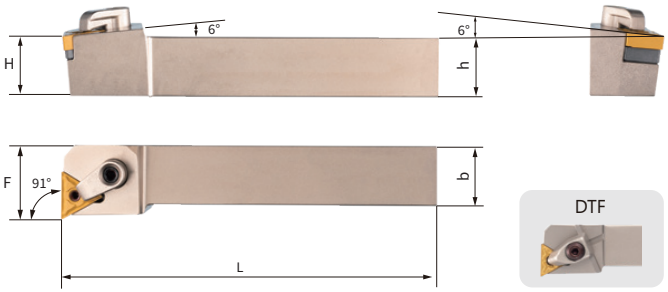

DTF

型号Model		尺寸Size (mm)					刀片 Blade	刀垫 Shim	中心销 Center Pin	扳手 Wrench	压板 Platen	双头螺栓 Double Screw	扳手 Wrench
左刀 Left	右刀 Right	h	b	H	F	L							
MTFNL1616H16	MTFNR1616H16	16	16	16	20	100	TN□□ 1604□□	MT1603	CTM513	L2	HL1813	ML0625	L3
MTFNL2020K16	MTFNR2020K16	20	20	20	25	125							
MTFNL2525M16	MTFNR2525M16	25	25	25	32	150							
MTFNL3232P16	MTFNR3232P16	32	32	32	40	170							

型号Model		尺寸Size (mm)						刀片 Blade	刀垫 Shim	刀垫螺钉 Shim Screw	压板 Platen	压板螺钉 Platen Screw	扳手 Wrench
左刀 Left	右刀 Right	h	b	L	L_1	H	F						
DTFNL1616H16	DTFNR1616H16	16	16	100	28	16	20	TN□□ 1604□□	MT1603	D5×9	D3220	DM6×21	L3
DTFNL2020K16	DTFNR2020K16	20	20	125	28	20	25						
DTFNL2525M16	DTFNR2525M16	25	25	150	28	25	32						
DTFNL3232P16	DTFNR3232P16	32	32	170	28	32	40						

□TGN□

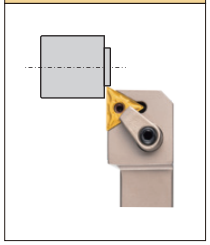

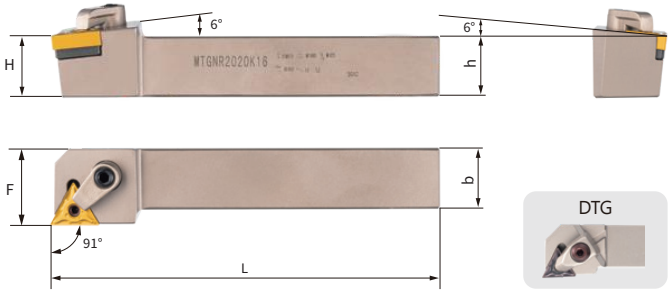

DTG

型号Model		尺寸Size (mm)					刀片 Blade	刀垫 Shim	中心销 Center Pin	扳手 Wrench	压板 Platen	双头螺栓 Double Screw	扳手 Wrench
左刀 Left	右刀 Right	h	b	H	F	L							
MTGNL1616H16	MTGNR1616H16	16	16	16	20	100	TN□□ 1604□□	MT1603	CTM513	L2	HL1813	ML0625	L3
MTGNL2020K16	MTGNR2020K16	20	20	20	25	125							
MTGNL2525M16	MTGNR2525M16	25	25	25	32	150							
MTGNL3232P16	MTGNR3232P16	32	32	32	40	170							

型号Model		尺寸Size (mm)						刀片 Blade	刀垫 Shim	刀垫螺钉 Shim Screw	压板 Platen	压板螺钉 Platen Screw	扳手 Wrench
左刀 Left	右刀 Right	h	b	L	L_1	H	F						
DTGNL1616H16	DTGNR1616H16	16	16	100	28	16	20	TN□□ 1604□□	MT1603	D5×9	D3220	DM6×21	L3
DTGNL2020K16	DTGNR2020K16	20	20	125	28	20	25						
DTGNL2525M16	DTGNR2525M16	25	25	150	28	25	32						
DTGNL3232P16	DTGNR3232P16	32	32	170	28	32	40						

□TJN□

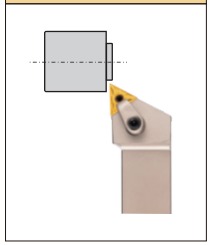

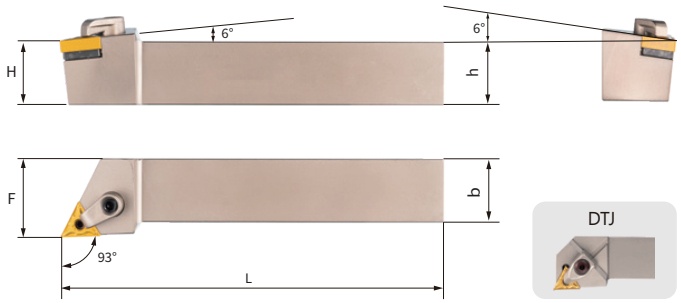

DTJ

型号Model		尺寸Size (mm)					刀片 Blade	刀垫 Shim	中心销 Center Pin	扳手 Wrench	压板 Platen	双头螺栓 Double Screw	扳手 Wrench
左刀 Left	右刀 Right	h	b	H	F	L							
MTJNL1616H16	MTJNR1616H16	16	16	16	20	100	TN□□ 1604□□	MT1603	CTM513	L2	HL1813	ML0625	L3
MTJNL2020K16	MTJNR2020K16	20	20	20	25	125							
MTJNL2525M16	MTJNR2525M16	25	25	25	32	150							
MTJNL3232P16	MTJNR3232P16	32	32	32	40	170							
MTJNL4040R16	MTJNR4040R16	40	40	40	50	200							
MTJNL2020K22	MTJNR2020K22	20	20	20	25	125	TN□□ 2204□□	MT2204	CTM617	L3	HL1917	ML0830	L4
MTJNL2525M22	MTJNR2525M22	25	25	25	32	150							
MTJNL3232P22	MTJNR3232P22	32	32	32	40	170							
MTJNL4040R22	MTJNR4040R22	40	40	40	50	200							

型号Model		尺寸Size (mm)						刀片 Blade	刀垫 Shim	刀垫螺钉 Shim Screw	压板 Platen	压板螺钉 Platen Screw	扳手 Wrench
左刀 Left	右刀 Right	h	b	L	L_1	H	F						
DTJNL1616H16	DTJNR1616H16	16	16	100	28	16	20	TN□□ 1604□□	MT1603	D5×9	D3220	DM6×21	L3
DTJNL2020K16	DTJNR2020K16	20	20	125	28	20	25						
DTJNL2525M16	DTJNR2525M16	25	25	150	28	25	32						
DTJNL3232P16	DTJNR3232P16	32	32	170	28	32	40						

外圆车刀复合式
COMPOSITE EXTERNAL TURNING TOOL

MTQN□

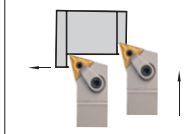

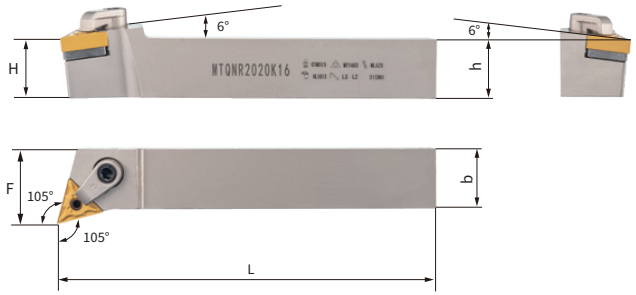

型号Model		尺寸Size (mm)					刀片 Blade	刀垫 Shim	中心销 Center Pin	扳手 Wrench	压板 Platen	双头螺栓 Double Screw	扳手 Wrench
左刀 Left	右刀 Right	h	b	H	F	L							
MTQNL1616H16	MTQNR1616H16	16	16	16	20	100	TN□□ 1604□□	MT1603	CTM513	L2	HL1813	ML0625	L3
MTQNL2020K16	MTQNR2020K16	20	20	20	25	125							
MTQNL2525M16	MTQNR2525M16	25	25	25	32	150							
MTQNL3232P16	MTQNR3232P16	32	32	32	40	170							

MTWN□

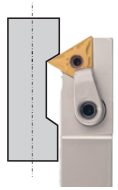

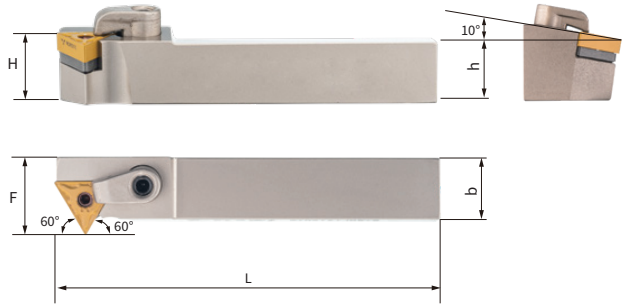

型号Model		尺寸Size (mm)					刀片 Blade	刀垫 Shim	中心销 Center Pin	扳手 Wrench	压板 Platen	双头螺栓 Double Screw	扳手 Wrench
左刀 Left	右刀 Right	h	b	H	F	L							
MTWNL1616H16	MTWNR1616H16	16	16	16	20	100	TN□□ 1604□□	MT1603	CTM513	L2	HL1813	ML0625	L3
MTWNL2020K16	MTWNR2020K16	20	20	20	25	125							
MTWNL2525M16	MTWNR2525M16	25	25	25	32	150							

WTENN

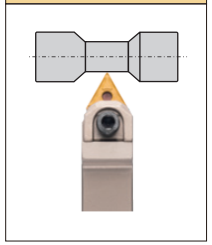

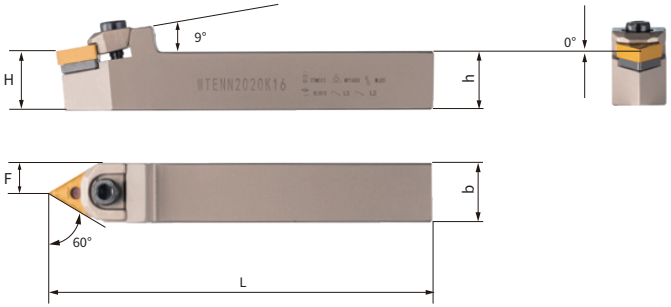

型号Model	尺寸Size (mm)					刀片 Blade	刀垫 Shim	中心销 Center Pin	扳手 Wrench	压板 Platen	压板螺钉 Platen Screw	扳手 Wrench
	h	b	H	F	L							
WTENN1616H16	16	16	16	8	100	TN□□1604□□	MT1603	CTM515-T	L2.5	HLT-16	M5×25	L4
WTENN2020K16	20	20	20	10	125							
WTENN2525M16	25	25	25	12.5	150							
WTENN2525M22	25	25	25	12.5	150	TN□□2204□□	MT2204	CTM618-W	L3	HLT-22	M6×25	L4

WTJN□

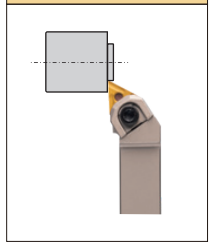

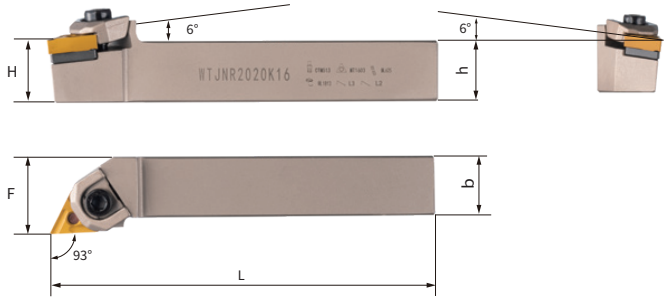

型号Model		尺寸Size (mm)					刀片 Blade	刀垫 Shim	中心销 Center Pin	扳手 Wrench	压板 Platen	压板螺钉 Platen Screw	扳手 Wrench
左刀 Left	右刀 Right	h	b	H	F	L							
WTJNL1616H16	WTJNR1616H16	16	16	16	20	100	TN□□ 1604□□	MT1603	CTM515-T	L2.5	HLT-16	M5×25	L4
WTJNL2020K16	WTJNR2020K16	20	20	20	25	125							
WTJNL2525M16	WTJNR2525M16	25	25	25	32	150							
WTJNL3232P16	WTJNR3232P16	32	32	32	40	170							
WTJNL2525M22	WTJNR2525M22	25	25	25	32	150	TN□□ 2204□□	MT2204	CTM618-W	L3	HLT-22	M6×25	L4
WTJNL3232P22	WTJNR3232P22	32	32	32	40	170							

外圆车刀复合式
COMPOSITE EXTERNAL TURNING TOOL

WTQN□

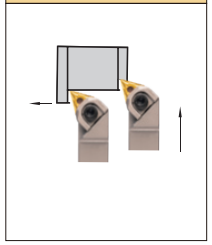

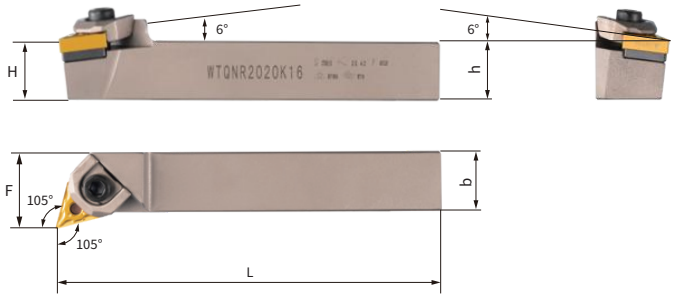

型号Model		尺寸Size (mm)					刀片 Blade	刀垫 Shim	中心销 Center Pin	扳手 Wrench	压板 Platen	压板螺钉 Platen Screw	扳手 Wrench
左刀 Left	右刀 Right	h	b	H	F	L							
WTQNL2020K16	WTQNR2020K16	20	20	20	25	125	TN□□ 1604□□	MT1603	CTM515-T	L2.5	HLT-16	M5×25	L4
WTQNL2525M16	WTQNR2525M16	25	25	25	32	150							
WTQNL2525M22	WTQNR2525M22	25	25	25	32	150	TN□□ 2204□□	MT2204	CTM618-W	L3	HLT-22	M6×25	L4

□VJN□

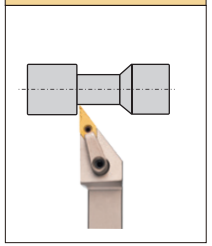

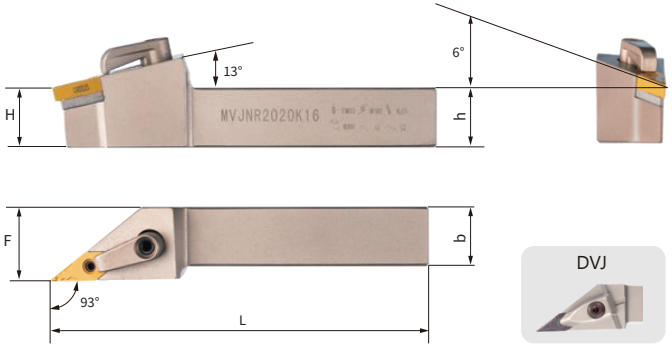

DVJ

型号Model		尺寸Size (mm)					刀片 Blade	刀垫 Shim	中心销 Center Pin	扳手 Wrench	压板 Platen	双头螺栓 Double Screw	扳手 Wrench
左刀 Left	右刀 Right	h	b	H	F	L							
MVJNL1616K16	MVJNR1616K16	16	16	16	20	125	VN□□ 1604□□	MV1603	CTM513	L2	HL2413	ML0625	L3
MVJNL2020K16	MVJNR2020K16	20	20	20	25	125							
MVJNL2525M16	MVJNR2525M16	25	25	25	32	150							
MVJNL3232P16	MVJNR3232P16	32	32	32	40	170							
MVJNL4040R16	MVJNR4040R16	40	40	40	50	200							

型号Model		尺寸Size (mm)						刀片 Blade	刀垫 Shim	刀垫螺丝 Shim Screw	压板 Platen	压板螺钉 Platen Screw	扳手 Wrench
左刀 Left	右刀 Right	h	b	L	L_1	H	F						
DVJNL1616K16	DVJNR1616K16	16	16	125	34	16	20	VN□□ 1604□□	MV1603	D5×9	D3310	DM6×21	L3
DVJNL2020K16	DVJNR2020K16	20	20	125	34	20	25						
DVJNL2525M16	DVJNR2525M16	25	25	150	34	25	32						
DVJNL3232P16	DVJNR3232P16	32	32	170	34	32	40						

MVQN□

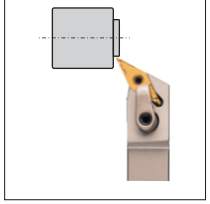

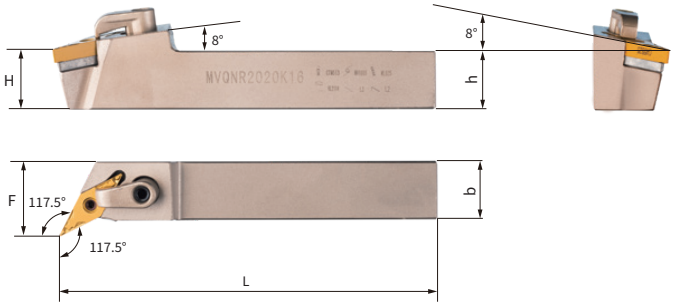

型号Model		尺寸Size (mm)					刀片 Blade	刀垫 Shim	中心销 Center Pin	扳手 Wrench	压板 Platen	双头螺栓 Double Screw	扳手 Wrench
左刀 Left	右刀 Right	h	b	H	F	L							
MVQNL1616K16	MVQNR1616K16	16	16	16	22	125	VN□□ 1604□□	MV1603	CTM513	L2	HL2113	ML0625	L3
MVQNL2020K16	MVQNR2020K16	20	20	20	25	125							
MVQNL2525M16	MVQNR2525M16	25	25	25	32	150					HL2413		
MVQNL3232P16	MVQNR3232P16	32	32	32	40	170							

MVUN□

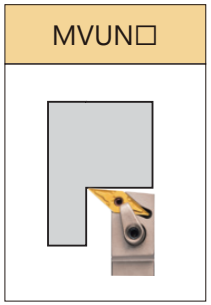

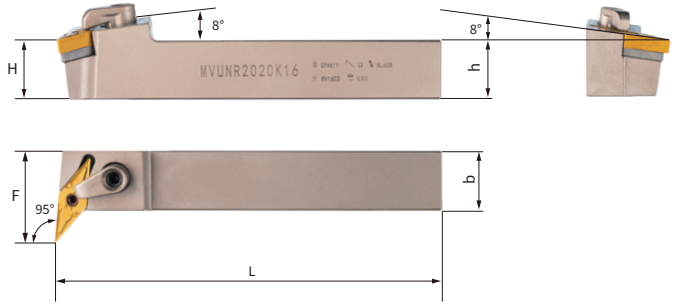

型号Model		尺寸Size (mm)					刀片 Blade	刀垫 Shim	中心销 Center Pin	扳手 Wrench	压板 Platen	双头螺栓 Double Screw	扳手 Wrench
左刀 Left	右刀 Right	h	b	H	F	L							
MVUNL1616K16	MVUNR1616K16	16	16	16	29	125	VN□□ 1604□□	MV1603	CTM513	L2	HL1813	ML0625	L3
MVUNL2020K16	MVUNR2020K16	20	20	20	30	125							
MVUNL2525M16	MVUNR2525M16	25	25	25	34	150							
MVUNL3232P16	MVUNR3232P16	32	32	32	40	170							

□VVNN

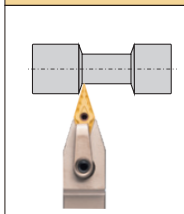

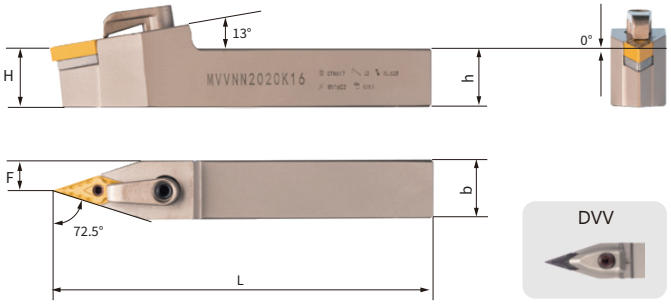

DVV

型号Model	尺寸Size (mm)					刀片 Blade	刀垫 Shim	中心销 Center Pin	扳手 Wrench	压板 Platen	双头螺栓 Double Screw	扳手 Wrench
	h	b	H	F	L							
MVVNN1616K16	16	16	16	8	125	VN□□1604□□	MV1603	CTM513	L2	HL2413	ML0625	L3
MVVNN2020K16	20	20	20	10	125							
MVVNN2525M16	25	25	25	12.5	150							
MVVNN3232P16	32	32	32	16	170							
MVVNN4040R16	40	40	40	20	200							

型号Model	尺寸Size (mm)						刀片 Blade	刀垫 Shim	刀垫螺丝 Shim Screw	压板 Platen	压板螺钉 Platen Screw	扳手 Wrench
	h	b	L	L_1	H	F						
DVVNN1616K16	16	16	125	34	16	8	VN□□1604□□	MV1603	D5×9	D3310	DM6×21	L3
DVVNN2020K16	20	20	125	34	20	10						
DVVNN2525M16	25	25	150	34	25	12.5						
DVVNN3232P16	32	32	170	34	32	16						

□WLN□

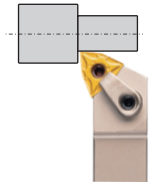

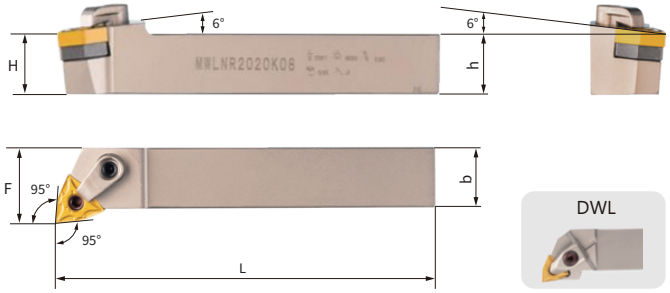

DWL

型号Model		尺寸Size (mm)					刀片 Blade	刀垫 Shim	中心销 Center Pin	扳手 Wrench	压板 Platen	双头螺栓 Double Screw	扳手 Wrench
左刀 Left	右刀 Right	h	b	H	F	L							
MWLNL1616H06	MWLNR1616H06	16	16	16	20	100	WN□□ 0604□□	MW0603	CTM513	L2	HL1813	ML0625	L3
MWLNL2020K06	MWLNR2020K06	20	20	20	25	125							
MWLNL2525M06	MWLNR2525M06	25	25	25	32	150							
MWLNL1616H08	MWLNR1616H08	16	16	16	20	100	WN□□ 0804□□	MW0804	CTM617	L3	HL1813	ML0625	L3
MWLNL2020K08	MWLNR2020K08	20	20	20	25	125							
MWLNL2525M08	MWLNR2525M08	25	25	25	32	150							
MWLNL3232P08	MWLNR3232P08	32	32	32	40	170							
MWLNL4040R08	MWLNR4040R08	40	40	40	50	200							

型号Model		尺寸Size (mm)						刀片 Blade	刀垫 Shim	刀垫螺丝 Shim Screw	压板 Platen	压板螺钉 Platen Screw	扳手 Wrench
左刀 Left	右刀 Right	h	b	L	L_1	H	F						
DWLNL1616H08	DWLNR1616H08	16	16	100	32	16	20	WN□□ 0804□□	MW0804	D6×10	D5240	DM6×21	L3
DWLNL2020K08	DWLNR2020K08	20	20	125	32	20	25						
DWLNL2525M08	DWLNR2525M08	25	25	150	32	25	32						
DWLNL3232P08	DWLNR3232P08	32	32	170	32	32	40						

外圆车刀复合式
COMPOSITE EXTERNAL TURNING TOOL

MWMNN

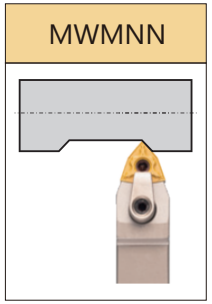

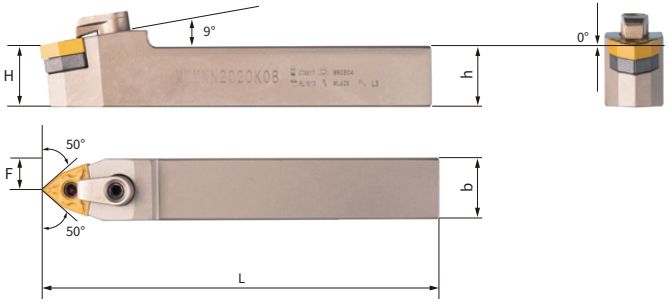

型号Model	尺寸Size (mm)					刀片 Blade	刀垫 Shim	中心销 Center Pin	扳手 Wrench	压板 Platen	双头螺栓 Double Screw	扳手 Wrench
	h	b	H	F	L							
MWMNN2020K08	20	20	20	10	125	WN□□ 0804□□	MW0804	CTM617	L3	HL1813	ML0625	L3
MWMNN2525M08	25	25	25	12.5	150							
MWMNN3232P08	32	32	32	16	170							

MWWN□

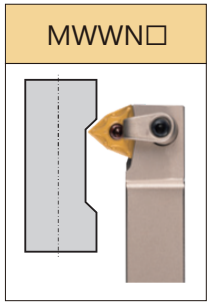

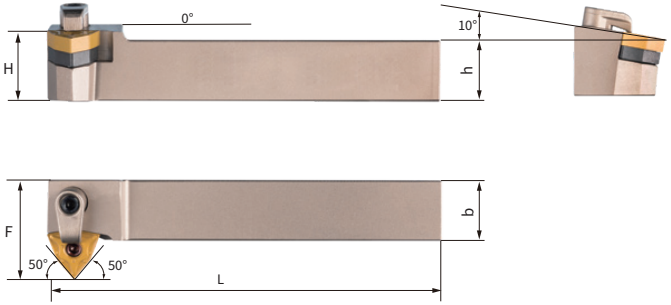

型号Model		尺寸Size (mm)					刀片 Blade	刀垫 Shim	中心销 Center Pin	扳手 Wrench	压板 Platen	双头螺栓 Double Screw	扳手 Wrench
左刀 Left	右刀 Right	h	b	H	F	L							
MWWNL2020K08	MWWNR2020K08	20	20	20	32	125	WN□□ 0804□□	MW0804	CTM617	L3	HL1813	ML0625	L3
MWWNL2525M08	MWWNR2525M08	25	25	25	36	150							

WWLN□

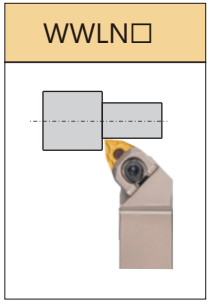

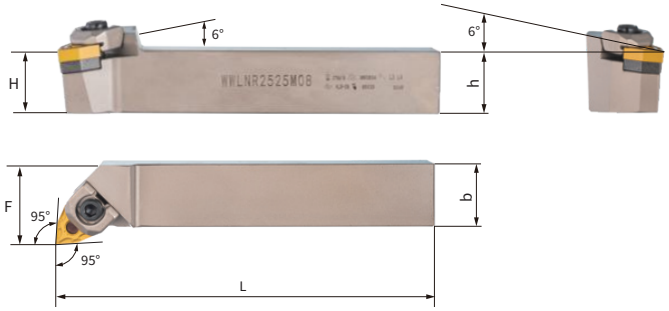

型号Model		尺寸Size (mm)					刀片 Blade	刀垫 Shim	中心销 Center Pin	扳手 Wrench	压板 Platen	压板螺钉 Platen Screw	扳手 Wrench
左刀 Left	右刀 Right	h	b	H	F	L							
WWLNL1616K08	WWLNR1616K08	16	16	16	20	125	WN□□ 0804□□	MW0804	CTM618-W	L3	HLW-08	M5×25	L4
WWLNL2020K08	WWLNR2020K08	20	20	20	25	125							
WWLNL2525M08	WWLNR2525M08	25	25	25	32	150							
WWLNL3232P08	WWLNR3232P08	32	32	32	40	170							

SCAC□

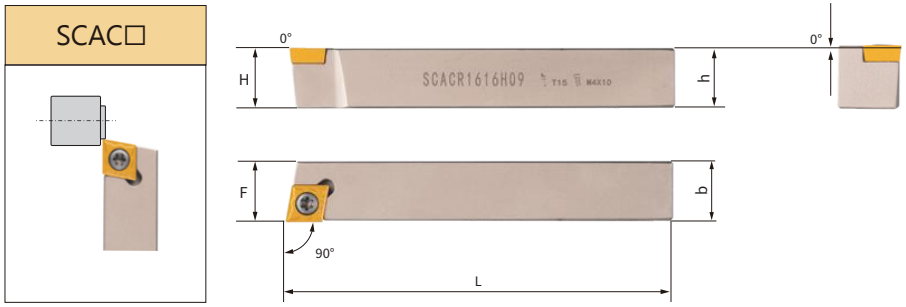

型号Model		尺寸Size (mm)					刀片 Blade	螺丝 Screw	扳手Wrench
左刀 Left	右刀 Right	h	b	H	F	L			
SCACL1010H06	SCACR1010H06	10	10	10	10	100	CC□□0602□□	M2.5×6	T8
SCACL1212H06	SCACR1212H06	12	12	12	12	100			
SCACL1212H09	SCACR1212H09	12	12	12	12	100	CC□□09T3□□	M4×10	T15
SCACL1616H09	SCACR1616H09	16	16	16	16	100			
SCACL2020K09	SCACR2020K09	20	20	20	20	125			
SCACL2020K12	SCACR2020K12	20	20	20	20	125	CC□□1204□□	M5×12	T20

SCBC□

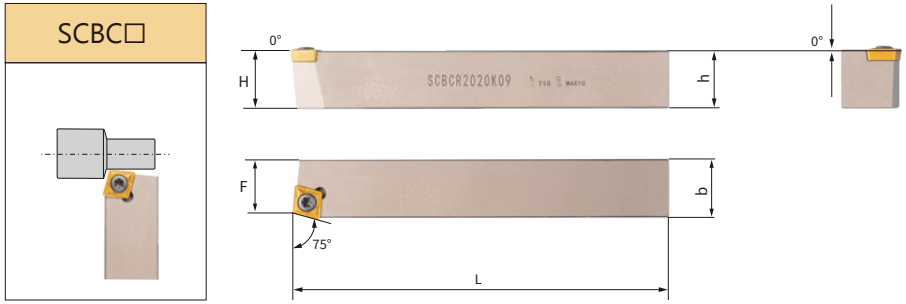

型号Model		尺寸Size (mm)					刀片 Blade	螺丝 Screw	扳手Wrench
左刀 Left	右刀 Right	h	b	H	F	L			
SCBCL1212H09	SCBCR1212H09	12	12	12	10	100	CC□□09T3□□	M4×10	T15
SCBCL1616H09	SCBCR1616H09	16	16	16	14	100			
SCBCL2020K09	SCBCR2020K09	20	20	20	18	125			
SCBCL2525M09	SCBCR2525M09	25	25	25	23	150			
SCBCL2020K12	SCBCR2020K12	20	20	20	17	125	CC□□1204□□	M5×12	T20
SCBCL2525M12	SCBCR2525M12	25	25	25	22	150			

SCFC□

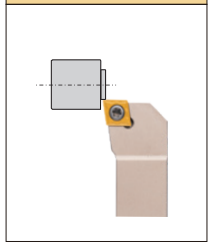

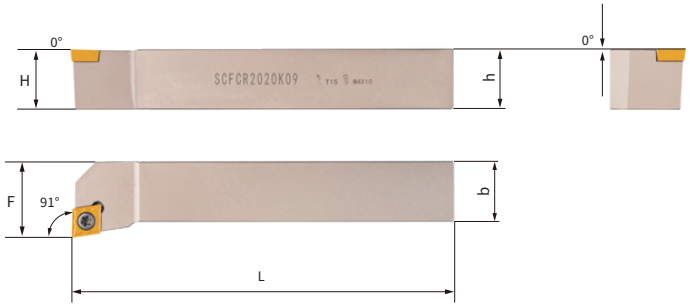

型号Model		尺寸Size (mm)					刀片 Blade	螺丝 Screw	扳手Wrench
左刀 Left	右刀 Right	h	b	H	F	L			
SCFCL1212H06	SCFCR1212H06	12	12	12	16	100	CC□□0602□□	M2.5×6	T8
SCFCL1616H06	SCFCR1616H06	16	16	16	20	100			
SCFCL1212H09	SCFCR1212H09	12	12	12	16	100	CC□□09T3□□	M4×10	T15
SCFCL1616H09	SCFCR1616H09	16	16	16	20	100			
SCFCL2020K09	SCFCR2020K09	20	20	20	25	125			
SCFCL2525M09	SCFCR2525M09	25	25	25	32	150			
SCFCL2020K12	SCFCR2020K12	20	20	20	25	125	CC□□1204□□	M5×12	T20
SCFCL2525M12	SCFCR2525M12	25	25	25	32	150			

外圆车刀螺钉式
SCREW TYPE EXTERNAL TURNING TOOL

SCGC□

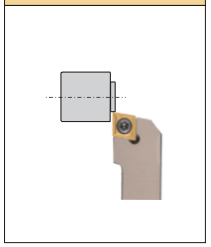

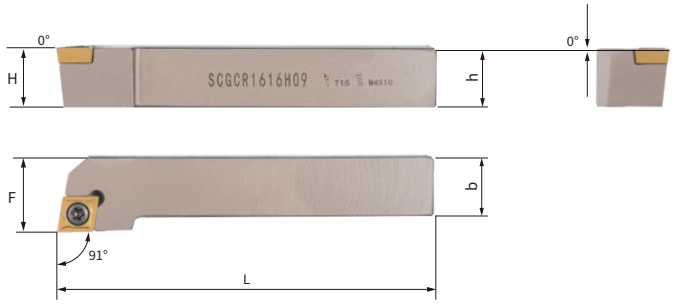

型号Model		尺寸Size (mm)					刀片 Blade	螺丝 Screw	扳手Wrench
左刀 Left	右刀 Right	h	b	H	F	L			
SCGCL1212H06	SCGCR1212H06	12	12	12	16	100	CC□□0602□□	M2.5×6	T8
SCGCL1616H06	SCGCR1616H06	16	16	16	20	100			
SCGCL1212H09	SCGCR1212H09	12	12	12	16	100	CC□□09T3□□	M4×10	T15
SCGCL1616H09	SCGCR1616H09	16	16	16	20	100			
SCGCL2020K09	SCGCR2020K09	20	20	20	25	125			
SCGCL2525M09	SCGCR2525M09	25	25	25	32	150			
SCGCL2020K12	SCGCR2020K12	20	20	20	25	125	CC□□1204□□	M5×12	T20
SCGCL2525M12	SCGCR2525M12	25	25	25	32	150			

SCKC□

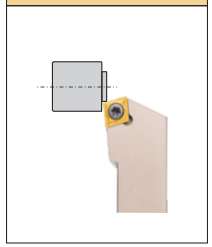

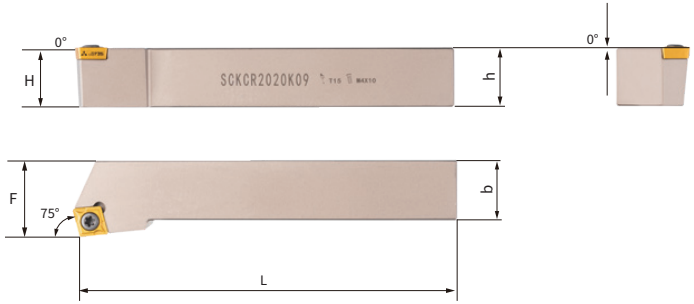

型号Model		尺寸Size (mm)					刀片 Blade	螺丝 Screw	扳手Wrench
左刀 Left	右刀 Right	h	b	H	F	L			
SCKCL1212H09	SCKCR1212H09	12	12	12	16	100	CC□□09T3□□	M4×10	T15
SCKCL1616H09	SCKCR1616H09	16	16	16	20	100			
SCKCL2020K09	SCKCR2020K09	20	20	20	25	125			
SCKCL2525M09	SCKCR2525M09	25	25	25	32	150			
SCKCL2020K12	SCKCR2020K12	20	20	20	25	125	CC□□1204□□	M5×12	T20
SCKCL2525M12	SCKCR2525M12	25	25	25	32	150			

SCLC□

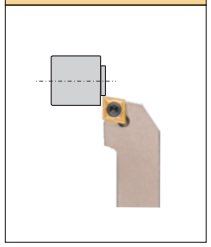

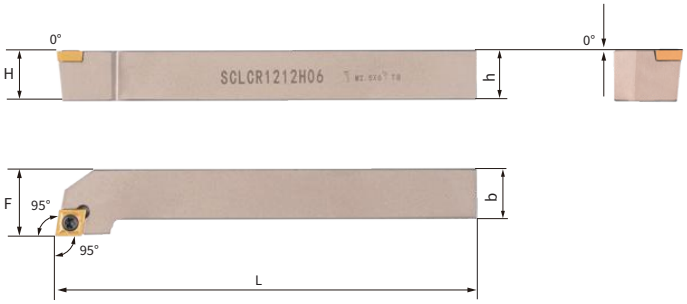

型号Model		尺寸Size (mm)					刀片 Blade	螺丝 Screw	扳手Wrench
左刀 Left	右刀 Right	h	b	H	F	L			
SCLCL0808H06	SCLCR0808H06	8	8	8	10	100	CC□□0602□□	M2.5×6	T8
SCLCL1010H06	SCLCR1010H06	10	10	10	12	100			
SCLCL1212H06	SCLCR1212H06	12	12	12	16	100			
SCLCL1616H06	SCLCR1616H06	16	16	16	20	100			
SCLCL1212H09	SCLCR1212H09	12	12	12	16	100	CC□□09T3□□	M4×10	T15
SCLCL1616H09	SCLCR1616H09	16	16	16	20	100			
SCLCL2020K09	SCLCR2020K09	20	20	20	25	125			
SCLCL2525M09	SCLCR2525M09	25	25	25	32	150			
SCLCL2020K12	SCLCR2020K12	20	20	20	25	125	CC□□1204□□	M5×12	T20
SCLCL2525M12	SCLCR2525M12	25	25	25	32	150			
SCLCL3232P12	SCLCR3232P12	32	32	32	40	170			

SCMCN

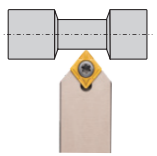

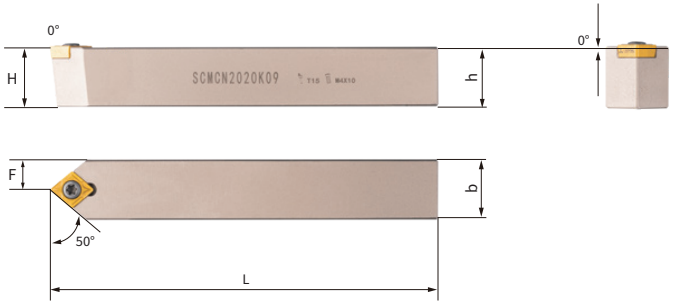

型号Model	尺寸Size (mm)					刀片 Blade	螺丝 Screw	扳手Wrench
	h	b	H	F	L			
SCMCN0808H06	8	8	8	4	100	CC□□0602□□	M2.5×6	T8
SCMCN1010H06	10	10	10	5	100			
SCMCN1212H06	12	12	12	6	100			
SCMCN1212H09	12	12	12	6	100	CC□□09T3□□	M4×10	T15
SCMCN1616H09	16	16	16	8	100			
SCMCN2020K09	20	20	20	10	125			
SCMCN2525M09	25	25	25	12.5	150			
SCMCN2020K12	20	20	20	10	125	CC□□1204□□	M5×12	T20
SCMCN2525M12	25	25	25	12.5	150			

外圆车刀螺钉式
SCREW TYPE EXTERNAL TURNING TOOL

A
外圆车刀

SCMCN-100

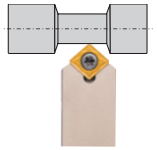

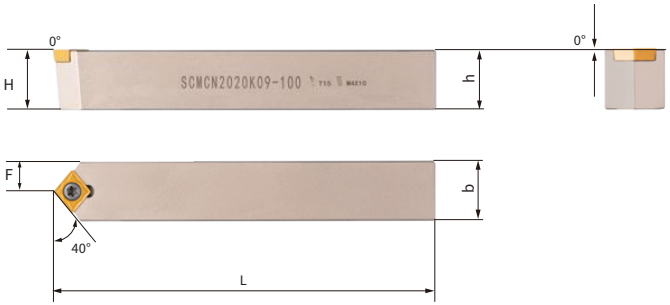

型号Model	尺寸Size (mm)					刀片 Blade	螺丝 Screw	扳手Wrench
	h	b	H	F	L			
SCMCN1010H06-100	10	10	10	5	100	CC□□0602□□	M2.5×6	T8
SCMCN1212H06-100	12	12	12	6	100			
SCMCN1212H09-100	12	12	12	6	100	CC□□09T3□□	M4×10	T15
SCMCN1616H09-100	16	16	16	8	100			
SCMCN2020K09-100	20	20	20	10	125			
SCMCN2525M09-100	25	25	25	12.5	150			
SCMCN2020K12-100	20	20	20	10	125	CC□□1204□□	M5×12	T20
SCMCN2525M12-100	25	25	25	12.5	150			

SDAC□

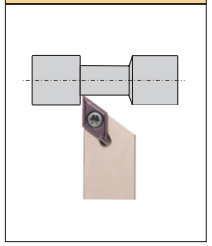

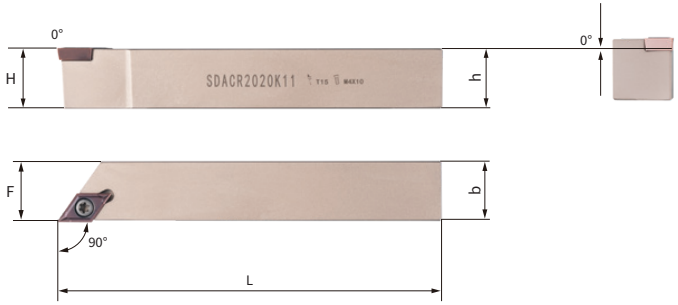

型号Model		尺寸Size (mm)					刀片 Blade	螺丝 Screw	扳手Wrench
左刀 Left	右刀 Right	h	b	H	F	L			
SDACL0808H07	SDACR0808H07	8	8	8	8	100	DC□□0702□□	M2.5×6	T8
SDACL1010H07	SDACR1010H07	10	10	10	10	100			
SDACL1212H07	SDACR1212H07	12	12	12	12	100			
SDACL1212H11	SDACR1212H11	12	12	12	12	100	DC□□11T3□□	M4×10	T15
SDACL1616H11	SDACR1616H11	16	16	16	16	100			
SDACL2020K11	SDACR2020K11	20	20	20	20	125			
SDACL2525M11	SDACR2525M11	25	25	25	25	150			

SDFC□

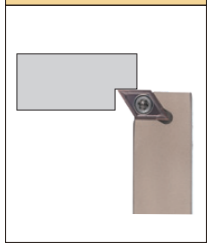

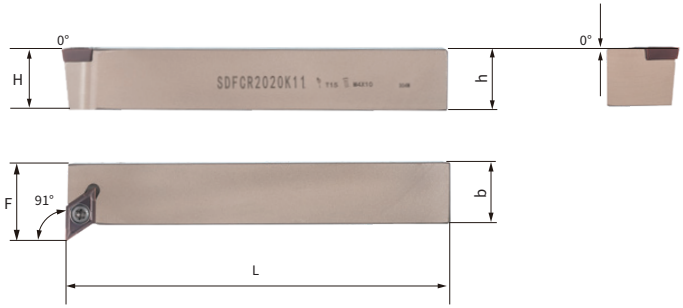

型号Model		尺寸Size (mm)					刀片 Blade	螺丝 Screw	扳手Wrench
左刀 Left	右刀 Right	h	b	H	F	L			
SDFCL1616H11	SDFCR1616H11	16	16	16	20	100	DC□□11T3□□	M4×10	T15
SDFCL2020K11	SDFCR2020K11	20	20	20	25	125			

SDJC□

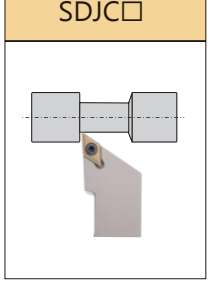

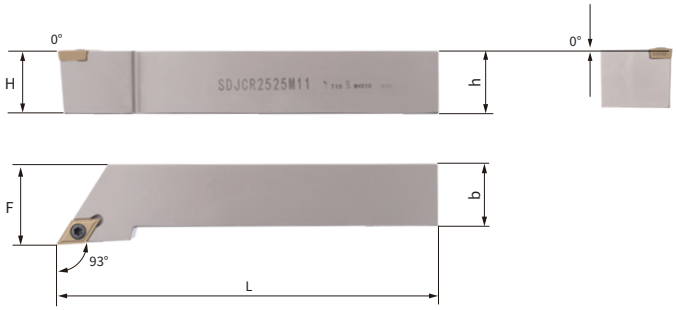

型号Model		尺寸Size (mm)					刀片 Blade	螺丝 Screw	扳手Wrench
左刀 Left	右刀 Right	h	b	H	F	L			
SDJCL0808H07	SDJCR0808H07	8	8	8	10	100	DC□□0702□□	M2.5×6	T8
SDJCL1010H07	SDJCR1010H07	10	10	10	12	100			
SDJCL1212H07	SDJCR1212H07	12	12	12	16	100			
SDJCL1616H07	SDJCR1616H07	16	16	16	20	100			
SDJCL2020K07	SDJCR2020K07	20	20	20	25	125			
SDJCL1010H11	SDJCR1010H11	10	10	10	12	100	DC□□11T3□□	M4×10	T15
SDJCL1212H11	SDJCR1212H11	12	12	12	16	100			
SDJCL1616H11	SDJCR1616H11	16	16	16	20	100			
SDJCL2020K11	SDJCR2020K11	20	20	20	25	125			
SDJCL2525M11	SDJCR2525M11	25	25	25	32	150			
SDJCL3232P11	SDJCR3232P11	32	32	32	40	170			

SDNCN

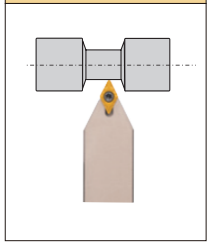

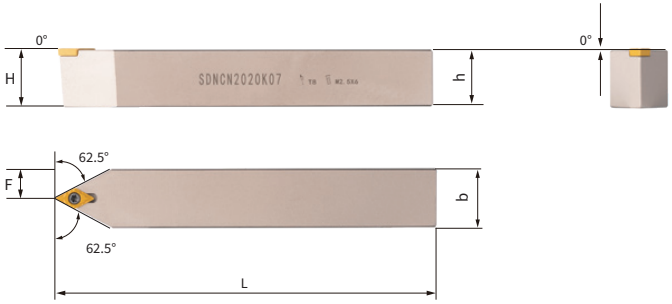

型号Model	尺寸Size (mm)					刀片 Blade	螺丝 Screw	扳手Wrench
	h	b	H	F	L			
SDNCN0808H07	8	8	8	4	100	DC□□0702□□	M2.5×6	T8
SDNCN1010H07	10	10	10	5	100			
SDNCN1212H07	12	12	12	6	100			
SDNCN1616H07	16	16	16	8	100			
SDNCN1212H11	12	12	12	6	100	DC□□11T3□□	M4×10	T15
SDNCN1616H11	16	16	16	8	100			
SDNCN2020K11	20	20	20	10	125			
SDNCN2525M11	25	25	25	12.5	150			

外圆车刀螺钉式
SCREW TYPE EXTERNAL TURNING TOOL

SDQC□

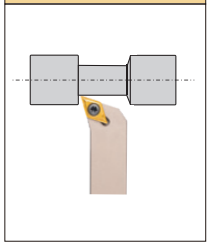

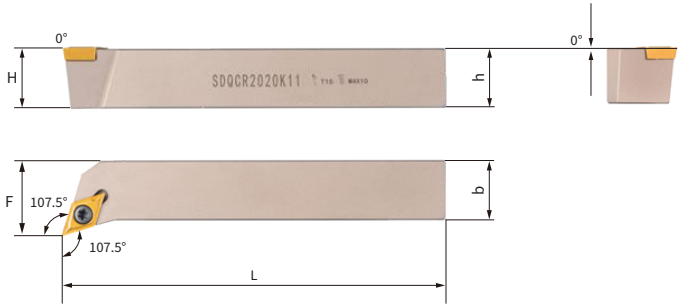

型号Model		尺寸Size (mm)					刀片 Blade	螺丝 Screw	扳手Wrench
左刀 Left	右刀 Right	h	b	H	F	L			
SDQCL1212H07	SDQCR1212H07	12	12	12	16	100	DC□□0702□□	M2.5×6	T8
SDQCL1616H07	SDQCR1616H07	16	16	16	20	100			
SDQCL2020K07	SDQCR2020K07	20	20	20	25	125			
SDQCL1212H11	SDQCR1212H11	12	12	12	16	100	DC□□11T3□□	M4×10	T15
SDQCL1616H11	SDQCR1616H11	16	16	16	20	100			
SDQCL2020K11	SDQCR2020K11	20	20	20	25	125			
SDQCL2525M11	SDQCR2525M11	25	25	25	32	150			

SDUC□

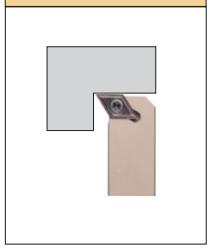

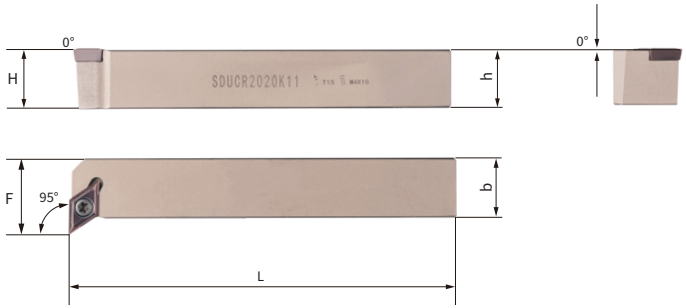

型号Model		尺寸Size (mm)					刀片 Blade	螺丝 Screw	扳手Wrench
左刀 Left	右刀 Right	h	b	H	F	L			
SDUCL1212H07	SDUCR1212H07	12	12	12	16	100	DC□□0702□□	M2.5×6	T8
SDUCL1616H07	SDUCR1616H07	16	16	16	20	100			
SDUCL2020K07	SDUCR2020K07	20	20	20	25	125			
SDUCL1212H11	SDUCR1212H11	12	12	12	16	100	DC□□11T3□□	M4×10	T15
SDUCL1616H11	SDUCR1616H11	16	16	16	20	100			
SDUCL2020K11	SDUCR2020K11	20	20	20	25	125			
SDUCL2525M11	SDUCR2525M11	25	25	25	32	150			

SSBC□

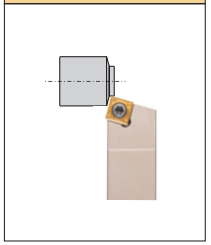

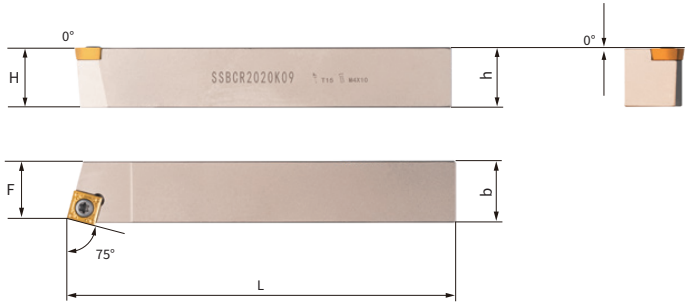

型号Model		尺寸Size (mm)					刀片 Blade	螺丝 Screw	扳手Wrench
左刀 Left	右刀 Right	h	b	H	F	L			
SSBCL1212H09	SSBCR1212H09	12	12	12	10	100	SC□□09T3□□	M4×10	T15
SSBCL1616H09	SSBCR1616H09	16	16	16	14	100			
SSBCL2020K09	SSBCR2020K09	20	20	20	18	125			
SSBCL2525M09	SSBCR2525M09	25	25	25	23	150			
SSBCL1616H12	SSBCR1616H12	16	16	16	13	100	SC□□1204□□	M5×12	T20
SSBCL2020K12	SSBCR2020K12	20	20	20	17	125			
SSBCL2525M12	SSBCR2525M12	25	25	25	22	150			

SSDCN

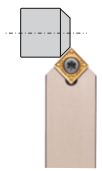

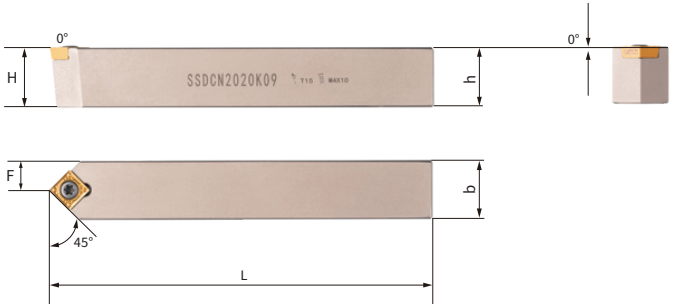

型号Model	尺寸Size (mm)					刀片 Blade	螺丝 Screw	扳手Wrench
	h	b	H	F	L			
SSDCN1212H09	12	12	12	6	100	SC□□09T3□□	M4×10	T15
SSDCN1616H09	16	16	16	8	100			
SSDCN2020K09	20	20	20	10	125			
SSDCN2525M09	25	25	25	12.5	150			
SSDCN2020K12	20	20	20	10	125	SC□□1204□□	M5×12	T20
SSDCN2525M12	25	25	25	12.5	150			

SSKC□

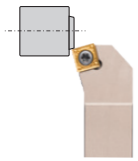

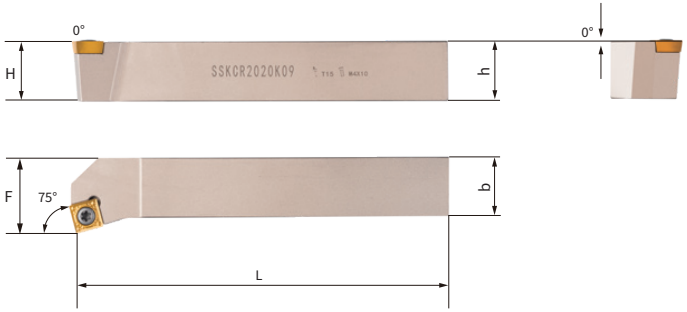

型号Model		尺寸Size (mm)					刀片 Blade	螺丝 Screw	扳手Wrench
左刀 Left	右刀 Right	h	b	H	F	L			
SSKCL1616H09	SSKCR1616H09	16	16	16	20	100	SC□□09T3□□	M4×10	T15
SSKCL2020K09	SSKCR2020K09	20	20	20	25	125			
SSKCL2525M09	SSKCR2525M09	25	25	25	32	150			

SSSC□

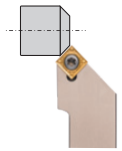

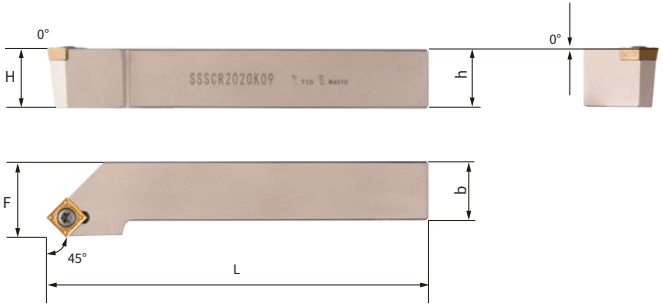

型号Model		尺寸Size (mm)					刀片 Blade	螺丝 Screw	扳手Wrench
左刀 Left	右刀 Right	h	b	H	F	L			
SSSCL1212H09	SSSCR1212H09	12	12	12	16	100	SC□□09T3□□	M4×10	T15
SSSCL1616H09	SSSCR1616H09	16	16	16	20	100			
SSSCL2020K09	SSSCR2020K09	20	20	20	25	125			
SSSCL2525M09	SSSCR2525M09	25	25	25	32	150			
SSSCL2020K12	SSSCR2020K12	20	20	20	25	125	SC□□1204□□	M5×12	T20
SSSCL2525M12	SSSCR2525M12	25	25	25	32	150			

STFC□

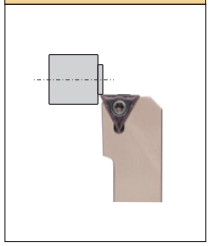

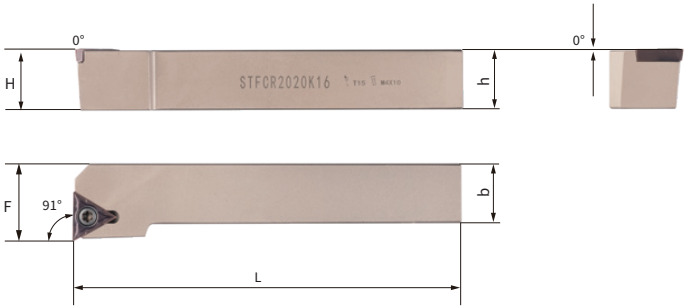

型号Model		尺寸Size (mm)					刀片 Blade	螺丝 Screw	扳手Wrench
左刀 Left	右刀 Right	h	b	H	F	L			
STFCL1010H11	STFCR1010H11	10	10	10	12	100	TC□□1102□□	M2.5×6	T8
STFCL1212H11	STFCR1212H11	12	12	12	16	100			
STFCL1616H11	STFCR1616H11	16	16	16	20	100			
STFCL2020K11	STFCR2020K11	20	20	20	25	125			
STFCL1616H16	STFCR1616H16	16	16	16	20	100	TC□□16T3□□	M4×10	T15
STFCL2020K16	STFCR2020K16	20	20	20	25	125			
STFCL2525M16	STFCR2525M16	25	25	25	32	150			

外圆车刀螺钉式
SCREW TYPE EXTERNAL TURNING TOOL

A
外圆车刀

STGC□

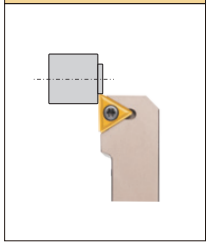

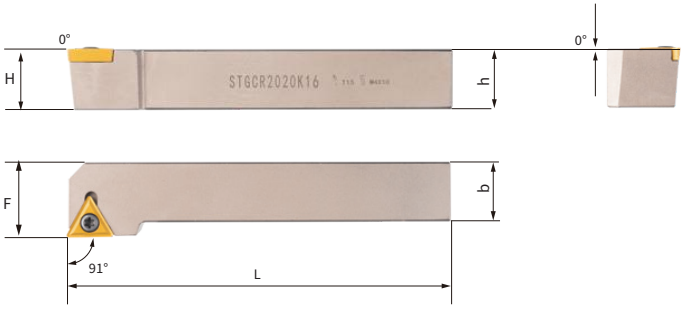

型号Model		尺寸Size (mm)					刀片 Blade	螺丝 Screw	扳手Wrench
左刀 Left	右刀 Right	h	b	H	F	L			
STGCL1010H11	STGCR1010H11	10	10	10	12	100	TC□□1102□□	M2.5×6	T8
STGCL1212H11	STGCR1212H11	12	12	12	16	100			
STGCL1616H11	STGCR1616H11	16	16	16	20	100			
STGCL2020K11	STGCR2020K11	20	20	20	25	125			
STGCL1616H16	STGCR1616H16	16	16	16	20	100	TC□□16T3□□	M4×10	T15
STGCL2020K16	STGCR2020K16	20	20	20	25	125			
STGCL2525M16	STGCR2525M16	25	25	25	32	150			

SVJC/B□

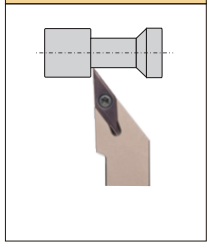

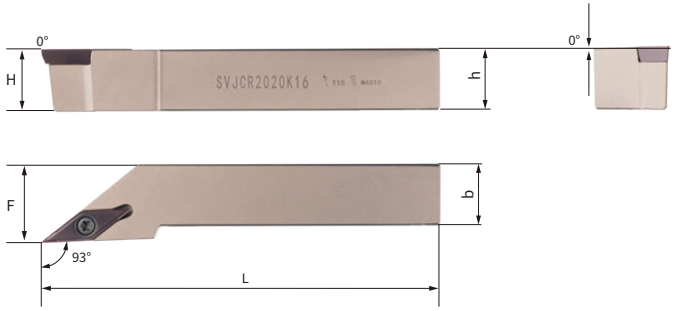

型号Model		尺寸Size (mm)					刀片 Blade	螺丝 Screw	扳手Wrench
左刀 Left	右刀 Right	h	b	H	F	L			
SVJ□L0808H11	SVJ□R0808H11	8	8	8	10	100	VC□□1103□□ VB□□1103□□	M2.5×6	T8
SVJ□L1010H11	SVJ□R1010H11	10	10	10	12	100			
SVJ□L1212H11	SVJ□R1212H11	12	12	12	16	100			
SVJ□L1616H11	SVJ□R1616H11	16	16	16	20	100			
SVJ□L2020K11	SVJ□R2020K11	20	20	20	25	125			
SVJ□L2525M11	SVJ□R2525M11	25	25	25	32	150			
SVJ□L1212H16	SVJ□R1212H16	12	12	12	16	100	VC□□1604□□ VB□□1604□□	M4×10	T15
SVJ□L1616H16	SVJ□R1616H16	16	16	16	20	100			
SVJ□L2020K16	SVJ□R2020K16	20	20	20	25	125			
SVJ□L2525M16	SVJ□R2525M16	25	25	25	32	150			
SVJ□L3232P16	SVJ□R3232P16	32	32	32	40	170			

外圆车刀螺钉式
SCREW TYPE EXTERNAL TURNING TOOL

A
外圆车刀

SVQC/B□

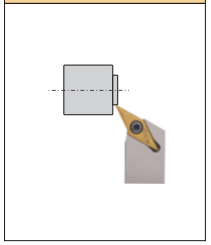

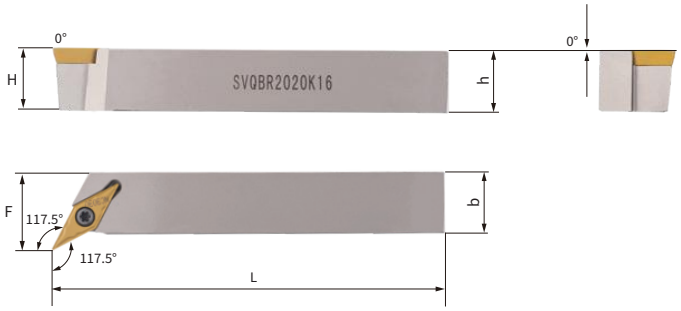

型号Model		尺寸Size (mm)					刀片 Blade	螺丝 Screw	扳手Wrench
左刀 Left	右刀 Right	h	b	H	F	L			
SVQ□L1212H11	SVQ□R1212H11	12	12	12	16	100	VC□□1103□□ VB□□1103□□	M2.5×6	T8
SVQ□L1616H11	SVQ□R1616H11	16	16	16	20	100			
SVQ□L2020K11	SVQ□R2020K11	20	20	20	25	125			
SVQ□L2525M11	SVQ□R2525M11	25	25	25	32	150			
SVQ□L2020K16	SVQ□R2020K16	20	20	20	25	125	VC□□1604□□ VB□□1604□□	M4×10	T15
SVQ□L2525M16	SVQ□R2525M16	25	25	25	32	150			

SVUC/B□

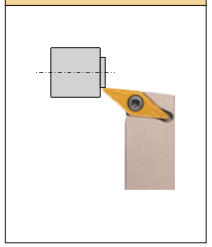

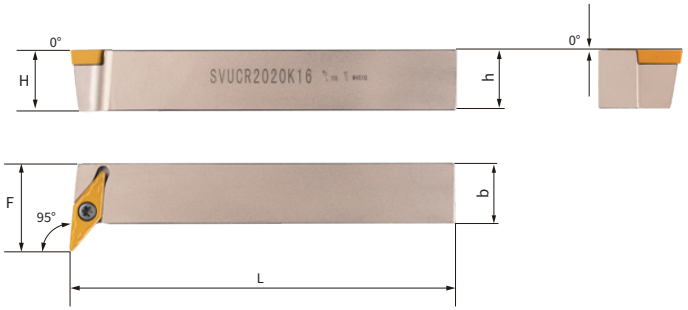

型号Model		尺寸Size (mm)					刀片 Blade	螺丝 Screw	扳手Wrench
左刀 Left	右刀 Right	h	b	H	F	L			
SVU□L1010H11	SVU□R1010H11	10	10	10	16	100	VC□□1103□□ VB□□1103□□	M2.5×6	T8
SVU□L1212H11	SVU□R1212H11	12	12	12	18	100			
SVU□L1616H11	SVU□R1616H11	16	16	16	20	100			
SVU□L2020K11	SVU□R2020K11	20	20	20	25	125			
SVU□L2020K16	SVU□R2020K16	20	20	20	30	125	VC□□1604□□ VB□□1604□□	M4×10	T15
SVU□L2525M16	SVU□R2525M16	25	25	25	35	150			

SVVC/BN

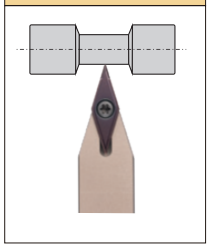

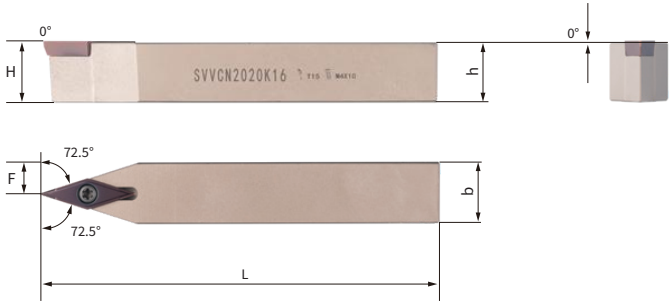

型号Model	尺寸Size (mm)					刀片 Blade	螺丝 Screw	扳手Wrench
	h	b	H	F	L			
SVV□N1010H11	10	10	10	5	100	VC□□1103□□ VB□□1103□□	M2.5×6	T8
SVV□N1212H11	12	12	12	6	100			
SVV□N1616H11	16	16	16	8	100			
SVV□N2020K11	20	20	20	10	125			
SVV□N2525M11	25	25	25	12.5	150			
SVV□N1616H16	16	16	16	8	100	VC□□1604□□ VB□□1604□□	M4×10	T15
SVV□N2020K16	20	20	20	10	125			
SVV□N2525M16	25	25	25	12.5	150			
SVV□N3232P16	32	32	32	16	170			

SWLC□

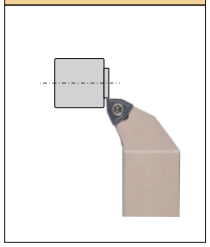

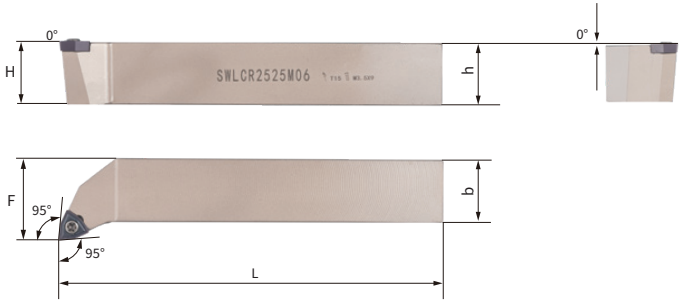

型号Model		尺寸Size (mm)					刀片 Blade	螺丝 Screw	扳手Wrench
左刀 Left	右刀 Right	h	b	H	F	L			
SWLCL1212H06	SWLCR1212H06	12	12	12	16	100	WC□□06T3□□	M3.5×9	T15
SWLCL1616H06	SWLCR1616H06	16	16	16	20	100			
SWLCL2020K06	SWLCR2020K06	20	20	20	25	125			
SWLCL2525M06	SWLCR2525M06	25	25	25	32	150			
SWLCL1616H08	SWLCR1616H08	16	16	16	20	100	WC□□0804□□	M4×10	T15
SWLCL2020K08	SWLCR2020K08	20	20	20	25	125			
SWLCL2525M08	SWLCR2525M08	25	25	25	32	150			

SRAC□

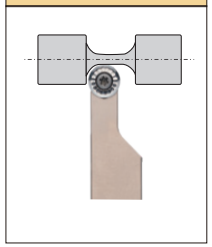

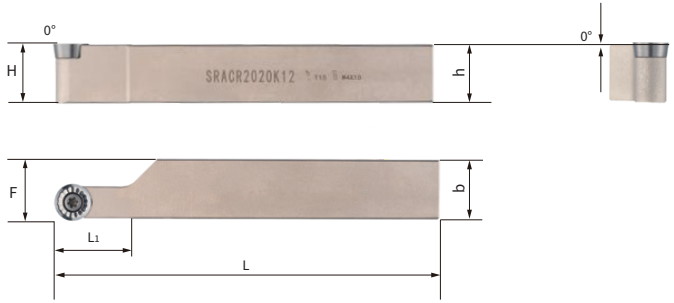

型号Model		尺寸Size (mm)						刀片 Blade	螺丝 Screw		扳手 Wrench
									RC	RP	
左刀 Left	右刀 Right	h	b	H	F	L1	L				
SRA□L1010H05	SRA□R1010H05	10	10	10	10	12	100	RC□□0502MO	M2.5×6		T8
SRA□L1212H05	SRA□R1212H05	12	12	12	12	12	100				
SRA□L1616H05	SRA□R1616H05	16	16	16	16	12	100				
SRA□L2020K05	SRA□R2020K05	20	20	20	20	12	125				
SRA□L2525M05	SRA□R2525M05	25	25	25	25	12	150				
SRA□L3232P05	SRA□R3232P05	32	32	32	32	16	170				
SRA□L1010H06	SRA□R1010H06	10	10	10	10	8	100	RC□□0602MO RP□□0602MO	M2.5×6	M2.5×6	T8
SRA□L1212H06	SRA□R1212H06	12	12	12	12	10	100				
SRA□L1616H06	SRA□R1616H06	16	16	16	16	12	100				
SRA□L2020K06	SRA□R2020K06	20	20	20	20	20	125				
SRA□L2525M06	SRA□R2525M06	25	25	25	25	20	150				
SRA□L3232P06	SRA□R3232P06	32	32	32	32	25	170				
SRA□L1010H08	SRA□R1010H08	10	10	10	10	10	100	RC□□0803MO RP□□08T2MO	M3×8	M3×8	T8
SRA□L1212H08	SRA□R1212H08	12	12	12	12	12	100				
SRA□L1616H08	SRA□R1616H08	16	16	16	16	16	100				
SRA□L2020K08	SRA□R2020K08	20	20	20	20	20	125				
SRA□L2525M08	SRA□R2525M08	25	25	25	25	25	150				
SRA□L3232P08	SRA□R3232P08	32	32	32	32	25	170				
SRA□L1212H10	SRA□R1212H10	12	12	12	12	12	100	RC□□10T3MO RP□□1003MO	M4X10	M3.5×9	T15
SRA□L1616H10	SRA□R1616H10	16	16	16	16	18	100				
SRA□L2020K10	SRA□R2020K10	20	20	20	20	20	125				
SRA□L2525M10	SRA□R2525M10	25	25	25	25	25	150				
SRA□L3232P10	SRA□R3232P10	32	32	32	32	25	170				
SRA□L1616H12	SRA□R1616H12	16	16	16	16	18	100	RC□□1204MO RP□□1204MO	M4×10	M4×10	T15
SRA□L2020K12	SRA□R2020K12	20	20	20	20	20	125				
SRA□L2525M12	SRA□R2525M12	25	25	25	25	25	150				
SRA□L3232P12	SRA□R3232P12	32	32	32	32	25	170				

外圆车刀螺钉式
SCREW TYPE EXTERNAL TURNING TOOL

型号Model		尺寸Size (mm)						刀片 Blade	螺丝 Screw		扳手 Wrench
									RC	RP	
左刀 Left	右刀 Right	h	b	H	F	L_1	L				
SRA□L2525M16	SRA□R2525M16	25	25	25	25.5	35	150	RC□□1606□□	M5×12		T20
SRA□L3232P16	SRA□R3232P16	32	32	32	32.5	40	170				
SRA□L2525M20	SRA□R2525M20	25	25	25	25.5	35	150	RC□□2006□□	M6×16		T25
SRA□L3232P20	SRA□R3232P20	32	32	32	32.5	40	170				

SRDCN

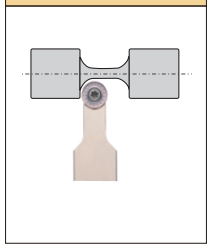

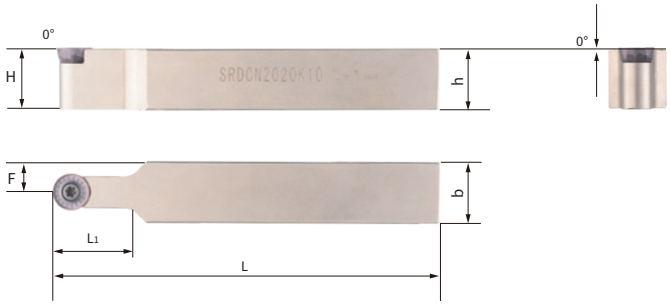

型号Model	尺寸Size (mm)						刀片 Blade	螺丝 Screw		扳手 Wrench
								RC	RP	
	h	b	H	F	L_1	L				
SRD□N1010H05	10	10	10	5	12	100	RC□□0502MO	M2.5×6		T8
SRD□N1212H05	12	12	12	6	12	100				
SRD□N1616H05	16	16	16	8	12	100				
SRD□N2020K05	20	20	20	10	12	125				
SRD□N2525M05	25	25	25	12.5	14	150				
SRD□N3232P05	32	32	32	16	16	170				
SRD□N1010H06	10	10	10	5	12	100	RC□□0602MO RP□□0602MO	M2.5×6	M2.5×6	T8
SRD□N1212H06	12	12	12	6	12	100				
SRD□N1616H06	16	16	16	8	12	100				
SRD□N2020K06	20	20	20	10	18	125				
SRD□N2525M06	25	25	25	12.5	18	150				
SRD□N3232P06	32	32	32	16	20	170				
SRD□N1010H08	10	10	10	5	12	100	RC□□0803MO RP□□08T2MO	M3×8	M3×8	T8
SRD□N1212H08	12	12	12	6	12	100				
SRD□N1616H08	16	16	16	8	16	100				
SRD□N2020K08	20	20	20	10	20	125				

型号Model	尺寸Size (mm)						刀片 Blade	螺丝 Screw		扳手 Wrench
								RC	RP	
	h	b	H	F	L_1	L				
SRD□N2525M08	25	25	25	12.5	25	150	RC□□0803MO RP□□08T2MO	M3×8	M3×8	T8
SRD□N3232P08	32	32	32	16	25	170				
SRD□N1010H10	10	10	10	5	12	100	RC□□10T3MO RP□□1003MO	M4×10	M3.5×9	T15
SRD□N1212H10	12	12	12	6	12	100				
SRD□N1616H10	16	16	16	8	16	100				
SRD□N2020K10	20	20	20	10	20	125				
SRD□N2525M10	25	25	25	12.5	25	150				
SRD□N3232P10	32	32	32	16	25	170				
SRD□N1212H12	12	12	12	6	12	100	RC□□1204MO RP□□1204MO	M4×10	M4×10	T15
SRD□N1616H12	16	16	16	8	18	100				
SRD□N2020K12	20	20	20	10	24	125				
SRD□N2525M12	25	25	25	12.5	28	150				
SRD□N3232P12	32	32	32	16	28	170				
SRD□N2020K16	20	20	20	10	24	125	RC□□1606□□	M5×12		T20
SRD□N2525M16	25	25	25	12.5	30	150				
SRD□N3232P16	32	32	32	16	30	170				
SRD□N2020K20	20	20	20	10	25	125	RC□□2006□□	M6×16		T25
SRD□N2525M20	25	25	25	12.5	30	150				
SRD□N3232P20	32	32	32	16	40	170				

A
外圆车刀

SRGC□

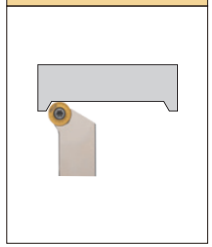

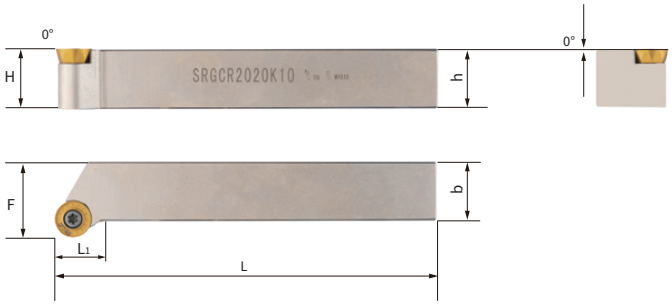

型号Model		尺寸Size (mm)						刀片 Blade	螺丝 Screw		扳手 Wrench
									RC	RP	
左刀 Left	右刀 Right	h	b	H	F	L_1	L				
SRG□L1212H05	SRG□R1212H05	12	12	12	16	10	100	RC□□0502MO RP□□0502MO	M2.5×6		T8
SRG□L1616H05	SRG□R1616H05	16	16	16	20	10	100				
SRG□L2020K05	SRG□R2020K05	20	20	20	25	12	125				
SRG□L2525M05	SRG□R2525M05	25	25	25	32	15	150				
SRG□L3232P05	SRG□R3232P05	32	32	32	40	18	170				
SRG□L1212H06	SRG□R1212H06	12	12	12	16	12	100	RC□□0602MO RP□□0602MO	M2.5×6	M2.5×6	T8
SRG□L1616H06	SRG□R1616H06	16	16	16	20	12	100				
SRG□L2020K06	SRG□R2020K06	20	20	20	25	12	125				
SRG□L2525M06	SRG□R2525M06	25	25	25	32	16	150				
SRG□L3232P06	SRG□R3232P06	32	32	32	40	20	170				
SRG□L1212H08	SRG□R1212H08	12	12	12	16	12	100	RC□□0803MO RP□□08T2MO	M3×8	M3×8	T8
SRG□L1616H08	SRG□R1616H08	16	16	16	20	12	100				
SRG□L2020K08	SRG□R2020K08	20	20	20	25	14	125				
SRG□L2525M08	SRG□R2525M08	25	25	25	32	17	150				
SRG□L3232P08	SRG□R3232P08	32	32	32	40	20	170				
SRG□L1212H10	SRG□R1212H10	12	12	12	16	14	100	RC□□10T3MO RP□□1003MO	M4X10	M3.5×9	T15
SRG□L1616H10	SRG□R1616H10	16	16	16	20	14	100				
SRG□L2020K10	SRG□R2020K10	20	20	20	25	15	125				
SRG□L2525M10	SRG□R2525M10	25	25	25	32	18	150				
SRG□L3232P10	SRG□R3232P10	32	32	32	40	21	170				
SRG□L1616H12	SRG□R1616H12	16	16	16	20	14	100	RC□□1204MO RP□□1204MO	M4×10	M4×10	T15
SRG□L2020K12	SRG□R2020K12	20	20	20	25	15	125				
SRG□L2525M12	SRG□R2525M12	25	25	25	32	18	150				
SRG□L3232P12	SRG□R3232P12	32	32	32	40	21	170				

内孔车刀

INNER TURNING TOOLS

>>>

- 内孔车刀复合式
  COMPOSITE INTERAL TURNING TOOL
- 内孔车刀螺钉式
  SCREW TYPE INTERAL TURNING TOOL

内孔车刀型号编制说明

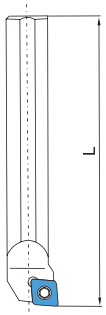

1刀杆形式

C硬质合金
D弹簧钢
H高速钢
S合金钢

3刀杆长度

L（mm）	
K	125
M	150
Q	180
R	200
S	250
T	300
U	350
V	400
X	特殊

5刀片形状

T
S
C 80°
D 55°
V 35°
W 80°

7刀片后角

B 5°
C 7°
P 11°
N 0°

9切削刃长

T
S
C 80°
D 55°
V 35°
W

S	32	U	-	S	T	F	C	R	16	-	
1	2	3		4	5	6	7	8	9		10

2刀杆直径

4压紧方式

C 上压式
S 螺钉压紧式
P 孔式

6刀头形状(主偏角)

K 75°
F 91°
U 95°
L 95° 95°
Q 107° 30°

8切削方向

R
L

10制造商选择代码

D= 加大偏置 f+1.0mm
E= 加大偏置 f+2.0mm
X= 背镗

□CKNR/L

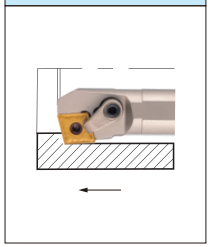

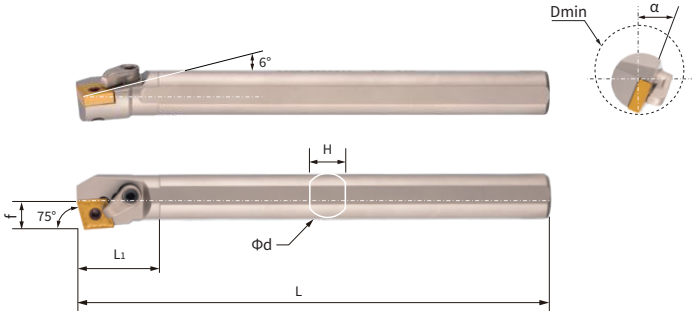

型号Model		尺寸Size (mm)							刀片 Blade	刀垫 Shim	中心销 Center Pin	扳手 Wrench	压板 Platen	双头螺栓 Double Screw	扳手 Wrench
左刀Left	右刀Right	Φ Dmin	Φd	L	L1	H	f	α°							
S20R-MCKNL12	S20R-MCKNR12	23	20	200	45	18.6	12	15°	CN□□ 1204□□	X	CTM613	L3	HL1810	ML0620	L3
S25S-MCKNL12	S25S-MCKNR12	28	25	250	45	23	14.5	12°							
S32T-MCKNL12	S32T-MCKNR12	35	32	300	50	30	18	15°		MC1204	CTM617	L3	HL1813	ML0625	L3
S40T-MCKNL12	S40T-MCKNR12	48	40	300	50	37	27	15°							
S50V-MCKNL12	S50V-MCKNR12	58	50	400	60	47	32	12°							

□CLNR/L

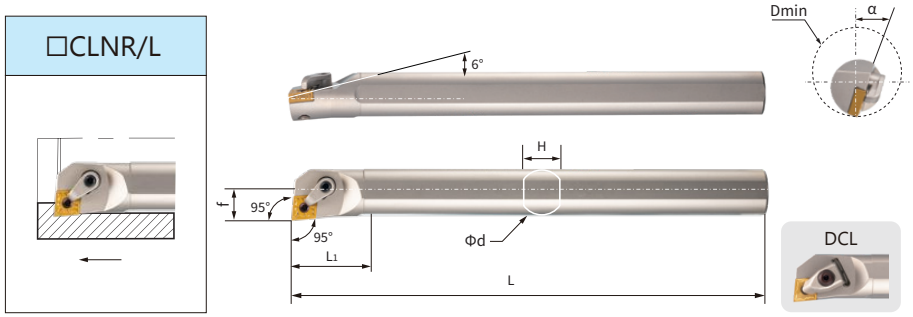

型号Model		尺寸Size (mm)							刀片 Blade	刀垫 Shim	中心销 Center Pin	扳手 Wrench	压板 Platen	双头螺栓 Double Screw	扳手 Wrench
左刀Left	右刀Right	Φ Dmin	Φd	L	L1	H	f	α°							
S16Q-MCLNL12	S16Q-MCLNR12	19.5	16	180	40	14.8	10.5	16°	CN□□ 1204□□	X	CTM613	L3	HL1511	ML0520	L2.5
S20R-MCLNL12	S20R-MCLNR12	23	20	200	45	18.6	12	15°					HL1810	ML0620	L3
S25S-MCLNL12	S25S-MCLNR12	28	25	250	45	23	14.5	12°							
S32T-MCLNL12	S32T-MCLNR12	35	32	300	50	30	18	16°		MC1204	CTM617	L3	HL1813	ML0625	L3
S40T-MCLNL12	S40T-MCLNR12	47	40	300	55	37	26	15°							
S50V-MCLNL12	S50V-MCLNR12	58	50	400	60	47	32	12°							
S32T-MCLNL16	S32T-MCLNR16	39	32	300	50	30	22	16°	CN□□ 1606□□	MC1604	CTM0822	L3	HL2217	ML0830	L4
S40T-MCLNL16	S40T-MCLNR16	47	40	300	55	37	26	15°							
S50V-MCLNL16	S50V-MCLNR16	58	50	400	60	47	32	12°							
S32T-MCLNL19	S32T-MCLNR19	39	32	300	50	30	22	16°	CN□□ 1906□□	MC1904	CTM1022	L4	HL2217	ML0830	L4
S40T-MCLNL19	S40T-MCLNR19	47	40	300	55	37	26	15°							
S50V-MCLNL19	S50V-MCLNR19	58	50	400	60	47	32	12°							

型号Model		尺寸Size (mm)							刀片 Blade	刀垫 Shim	刀垫螺钉 Shim Screw	压板 Platen	压板螺钉 Platen Screw	扳手 Wrench
左刀Left	右刀Right	Φ Dmin	Φd	L	L1	H	f	α°						
S20R-DCLNL12	S20R-DCLNR12	23	20	200	45	18.6	12	15°	CN□□ 1204□□	X	X	D5240	DM6×21	L3
S25S-DCLNL12	S25S-DCLNR12	28	25	250	45	23	14.5	12°						
S32T-DCLNL12	S32T-DCLNR12	35	32	300	50	30	18	16°		MC1204	D6×10			
S40T-DCLNL12	S40T-DCLNR12	47	40	300	55	37	26	15°						
S50V-DCLNL12	S50V-DCLNR12	58	50	400	60	47	32	12°						

□CWNR/L

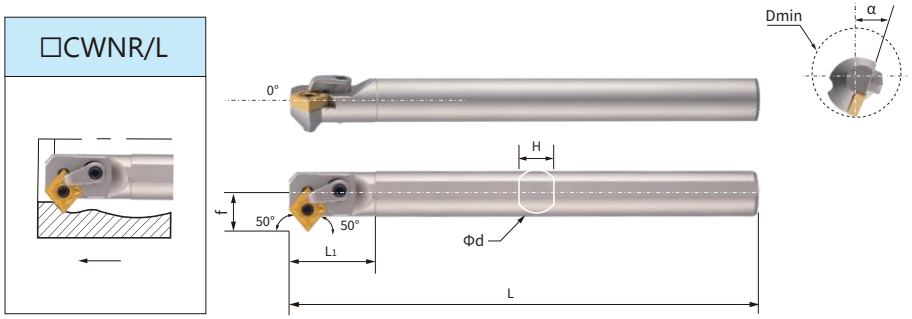

型号Model		尺寸Size (mm)							刀片 Blade	刀垫 Shim	杠销 Center Pin	扳手 Wrench	压板 Platen	双头螺栓 Double Screw	扳手 Wrench
左刀Left	右刀Right	Φ Dmin	Φd	L	L1	H	f	α°							
S20R-MCWNL12	S20R-MCWNR12	27	20	200	45	18.6	16	15°	CN□□ 1204□□	X	CTM613	L3	HL1810	ML0620	L3
S25S-MCWNL12	S25S-MCWNR12	32	25	250	45	23	18.5	15°							
S32T-MCWNL12	S32T-MCWNR12	39	32	300	50	30	22	15°		MC1204	CTM617	L3	HL1813	ML0625	L3

□DQNR/L

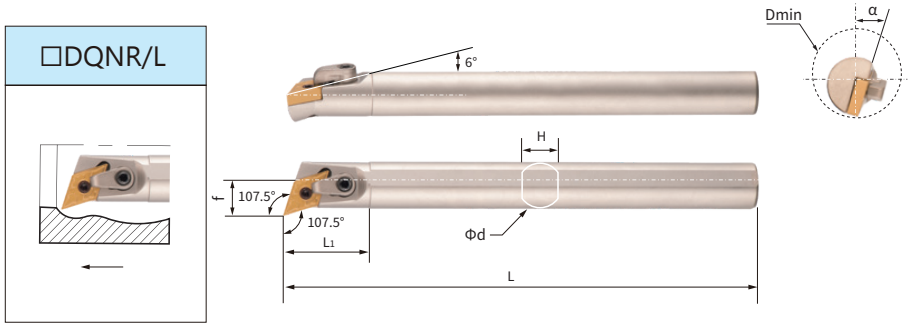

型号Model		尺寸Size (mm)							刀片 Blade	刀垫 Shim	中心销 Center Pin	扳手 Wrench	压板 Platen	双头螺栓 Double Screw	扳手 Wrench
左刀Left	右刀Right	Φ Dmin	Φd	L	L1	H	f	α°							
S20R-MDQNL11	S20R-MDQNR11	25	20	200	35	18.6	13	15°	DN□□ 1104□□	X	CTM510	L2	HL1810	ML0620	L3
S20R-MDQNL15	S20R-MDQNR15	25	20	200	35	18.6	13.5	15°	DN□□ 1504□□	X	CTM613	L3	HL2113	ML0625	L3
S25S-MDQNL15	S25S-MDQNR15	30	25	250	45	23	16	12°							
S32T-MDQNL15	S32T-MDQNR15	40	32	300	50	30	22	17°		MD1504	CTM617	L3	HL2113	ML0625	L3
S40T-MDQNL15	S40T-MDQNR15	47	40	300	55	37	25	15°							
S50V-MDQNL15	S50V-MDQNR15	59	50	400	65	47	32	12°							

内孔车刀复合式
COMPOSITE INTERAL TURNING TOOL

□DUNR/L

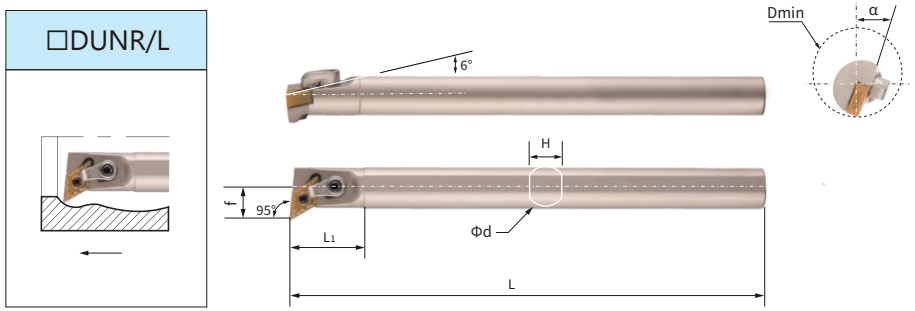

型号Model		尺寸Size (mm)							刀片 Blade	刀垫 Shim	中心销 Center Pin	扳手 Wrench	压板 Platen	双头螺栓 Double Screw	扳手 Wrench
左刀Left	右刀Right	Φ Dmin	Φd	L	L1	H	f	α°							
S16Q-MDUNL11	S16Q-MDUNR11	22	16	180	35	14.8	12.5	12°	DN□□ 1104□□	X	CTM510	L2	HL1511	ML0520	L2.5
S20R-MDUNL11	S20R-MDUNR11	25	20	200	40	18.6	13	15°					HL1810	ML0620	L3
S20R-MDUNL15	S20R-MDUNR15	27	20	200	40	18.6	15	15°	DN□□ 1504□□	X	CTM613	L3	HL1810	ML0620	L3
S25S-MDUNL15	S25S-MDUNR15	31	25	250	45	23	16.5	14°							
S32T-MDUNL15	S32T-MDUNR15	38.5	32	300	50	30	22.5	16°		MD1504	CTM617	L3	HL2113	ML0625	L3
S40T-MDUNL15	S40T-MDUNR15	48	40	300	60	37	26	15°							
S50V-MDUNL15	S50V-MDUNR15	58	50	400	60	47	31	12°							

□DWNR/L

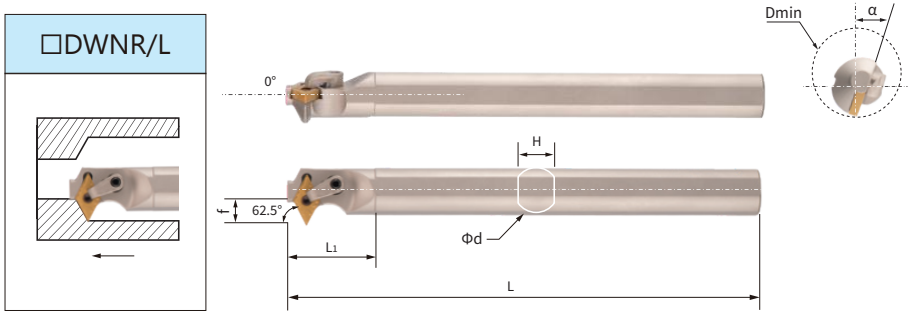

型号Model		尺寸Size (mm)							刀片 Blade	刀垫 Shim	中心销 Center Pin	扳手 Wrench	压板 Platen	双头螺栓 Double Screw	扳手 Wrench
左刀Left	右刀Right	Φ Dmin	Φd	L	L1	H	f	α°							
S25S-MDWNL15	S25S-MDWNR15	32	25	250	45	23	18	12°	DN□□ 1504□□	X	CTM613	L3	HL1810	ML0620	L3
S32T-MDWNL15	S32T-MDWNR15	41	32	300	50	30	23	16°		MD1504	CTM617	L3	HL1813	ML0625	L3
S40T-MDWNL15	S40T-MDWNR15	49	40	300	55	37	27	16°							
S50V-MDWNL15	S50V-MDWNR15	59	50	400	65	47	32	12°							

□DZNR/L

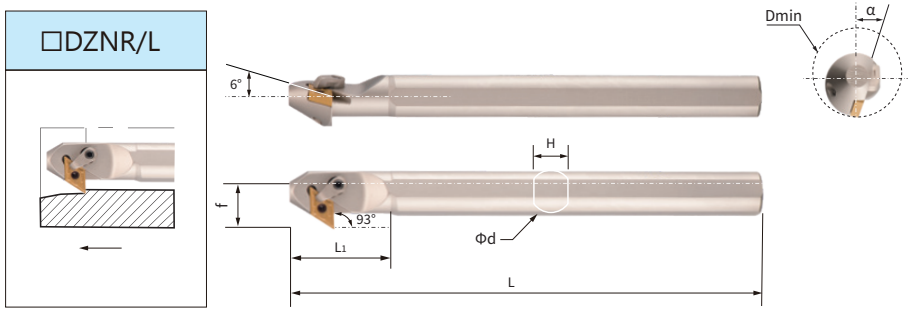

型号Model		尺寸Size (mm)							刀片 Blade	刀垫 Shim	中心销 Center Pin	扳手 Wrench	压板 Platen	双头螺栓 Double Screw	扳手 Wrench
左刀Left	右刀Right	Φ Dmin	Φd	L	L1	H	f	α°							
S20R-MDZNL11	S20R-MDZNR11	27	20	200	40	18.6	15.5	15°	DN□□ 1104□□	X	CTM510	L2	HL1810	ML0620	L3
S25S-MDZNL15	S25S-MDZNR15	34	25	250	45	23	20	15°	DN□□ 1504□□	X	CTM613	L3	HL1810	ML0620	L3
S32T-MDZNL15	S32T-MDZNR15	40	32	300	50	30	23	17°		MD1504	CTM617	L3	HL1813	ML0625	L3
S40T-MDZNL15	S40T-MDZNR15	50	40	300	55	37	27	15°							

内孔车刀复合式
COMPOSITE INTERAL TURNING TOOL

□SKNR/L

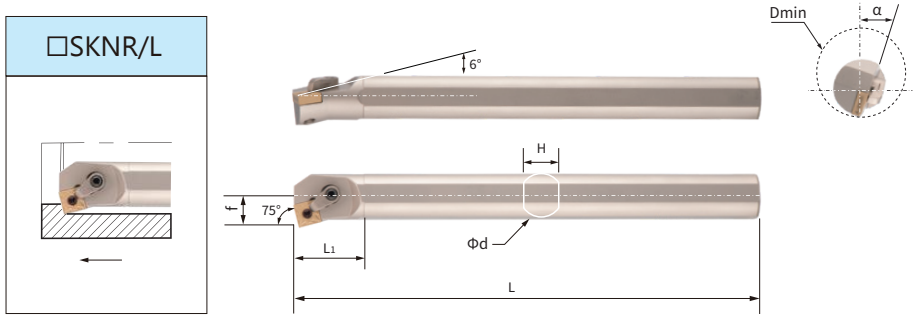

型号Model		尺寸Size (mm)							刀片 Blade	刀垫 Shim	中心销 Center Pin	扳手 Wrench	压板 Platen	双头螺栓 Double Screw	扳手 Wrench
左刀Left	右刀Right	Φ Dmin	Φd	L	L1	H	f	α°							
S16Q-MSKNL12	S16Q-MSKNR12	20	16	180	40	14.8	10.5	17°	SN□□ 1204□□	X	CTM613	L3	HL1511	ML0520	L2.5
S20R-MSKNL12	S20R-MSKNR12	25	20	200	40	18.6	13	15°					HL1810	ML0620	L3
S25S-MSKNL12	S25S-MSKNR12	31	25	250	45	23	16.5	12°							
S32T-MSKNL12	S32T-MSKNR12	40	32	300	50	30	22	17°		MS1204	CTM617	L3	HL1813	ML0625	L3
S40T-MSKNL12	S40T-MSKNR12	48	40	300	55	37	26	12°							
S50V-MSKNL12	S50V-MSKNR12	59	50	400	65	47	32	12°							
S40T-MSKNL15	S40T-MSKNR15	48	40	300	55	37	26	12°	SN□□ 1504□□	MS1504	CTM0822	L3	HL2217	ML0830	L4

□SSNR/L

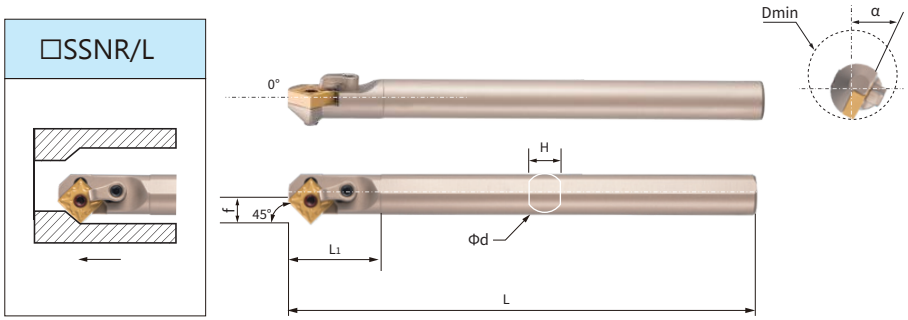

型号Model		尺寸Size (mm)							刀片 Blade	刀垫 Shim	中心销 Center Pin	扳手 Wrench	压板 Platen	双头螺栓 Double Screw	扳手 Wrench
左刀Left	右刀Right	Φ Dmin	Φd	L	L1	H	f	α°							
S16Q-MSSNL12	S16Q-MSSNR12	22	16	180	35	14.8	12	17°	SN□□ 1204□□	X	CTM613	L3	HL1511	ML0520	L2.5
S20R-MSSNL12	S20R-MSSNR12	28	20	200	35	18.6	16	15°					HL1810	ML0620	L3
S25S-MSSNL12	S25S-MSSNR12	32	25	250	40	23	18	12°							
S32T-MSSNL12	S32T-MSSNR12	40	32	300	40	30	22	17°		MS1204	CTM617		HL1813	ML0625	

B
内孔车刀

□TFNR/L

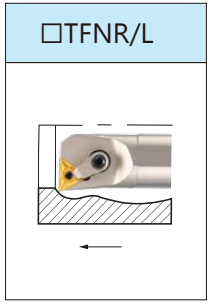

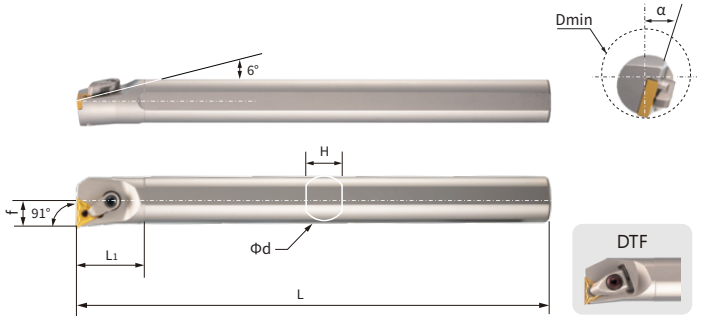

型号Model		尺寸Size (mm)							刀片 Blade	刀垫 Shim	中心销 Center Pin	扳手 Wrench	压板 Platen	双头螺栓 Double Screw	扳手 Wrench
左刀Left	右刀Right	Φ Dmin	Φd	L	L1	H	f	α°							
S16Q-MTFNL16	S16Q-MTFNR16	20	16	180	40	14.8	10.5	17°	TN□□ 1604□□	X	CTM510	L2	HL1511	ML0520	L2.5
S20R-MTFNL16	S20R-MTFNR16	24	20	200	40	18.6	12	15°		X	CTM510	L2	HL1810	ML0620	L3
S25S-MTFNL16	S25S-MTFNR16	29	25	250	45	23	14.5	15°							
S32T-MTFNL16	S32T-MTFNR16	36	32	300	54	30	18	15°		MT1603	CTM513	L2	HL1813	ML0625	L3
S40T-MTFNL16	S40T-MTFNR16	48	40	300	60	37	26	15°							
S50T-MTFNL16	S50T-MTFNR16	59	50	400	60	47	32	12°							

型号Model		尺寸Size (mm)							刀片 Blade	刀垫 Shim	刀垫螺钉 Shim Screw	压板 Platen	压板螺钉 Platen Screw	扳手 Wrench
左刀Left	右刀Right	Φ Dmin	Φd	L	L1	H	f	α°						
S20R-DTFNL16	S20R-DTFNR16	24	20	200	40	18.6	12	15	TN□□ 1604□□	X	X	D3220	DM6×21	L3
S25S-DTFNL16	S25S-DTFNR16	29	25	250	45	23	14.5	15						
S32T-DTFNL16	S32T-DTFNR16	36	32	300	54	30	18	15		MT1603	D5×9			
S40T-DTFNL16	S40T-DTFNR16	48	40	300	60	37	26	15						
S50T-DTFNL16	S50T-DTFNR16	59	50	400	60	47	32	12						

□TJNR/L

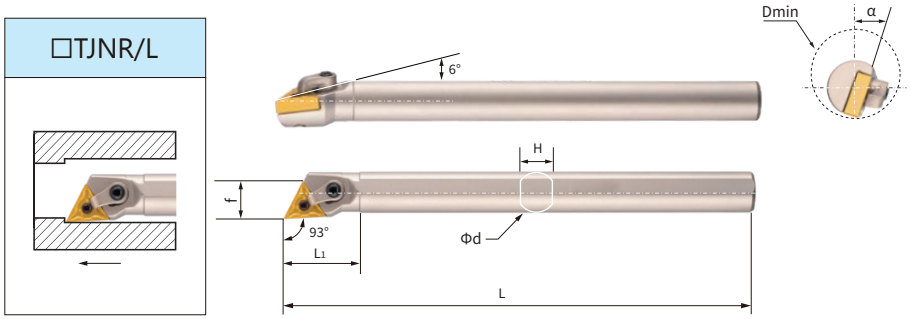

型号Model		尺寸Size (mm)							刀片 Blade	刀垫 Shim	中心销 Center Pin	扳手 Wrench	压板 Platen	双头螺栓 Double Screw	扳手 Wrench
左刀Left	右刀Right	Φ Dmin	Φd	L	L1	H	f	α°							
S16Q-MTJNL16	S16Q-MTJNR16	21	16	180	35	14.8	10.5	15°	TN□□ 1604□□	X	CTM510	L2	HL1511	ML0520	L2.5
S20R-MTJNL16	S20R-MTJNR16	24	20	200	35	18.6	12	15°		X	CTM510	L2	HL1810	ML0620	L3
S25S-MTJNL16	S25S-MTJNR16	29	25	250	40	23	14.5	12°							
S32T-MTJNL16	S32T-MTJNR16	36	32	300	45	30	18	12°		MT1603	CTM513	L2	HL1813	ML0625	L3
S40T-MTJNL16	S40T-MTJNR16	47	40	300	60	37	25	12°							

□TLNR/L

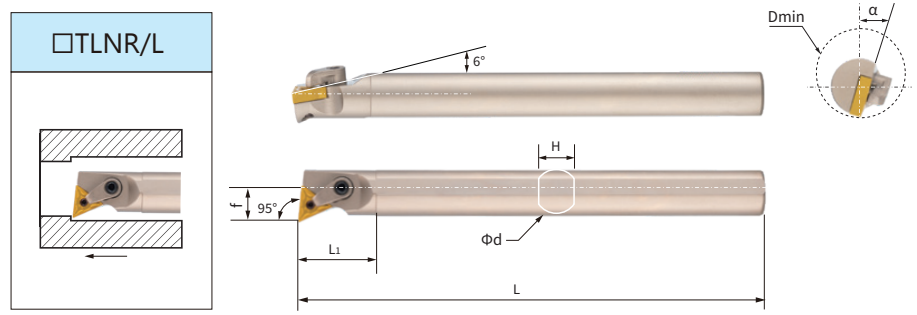

型号Model		尺寸Size (mm)							刀片 Blade	刀垫 Shim	中心销 Center Pin	扳手 Wrench	压板 Platen	双头螺栓 Double Screw	扳手 Wrench
左刀Left	右刀Right	Φ Dmin	Φd	L	L1	H	f	α°							
S16Q-MTLNL16	S16Q-MTLNR16	21	16	180	35	14.8	11.5	15°	TN□□ 1604□□	X	CTM510	L2	HL1511	ML0520	L2.5
S20R-MTLNL16	S20R-MTLNR16	25	20	200	35	18.6	13	15°		X	CTM510	L2	HL1810	ML0620	L3
S25S-MTLNL16	S25S-MTLNR16	31	25	250	40	23	16.5	12°							
S32T-MTLNL16	S32T-MTLNR16	38	32	300	45	30	22	12°		MT1603	CTM513	L2	HL1813	ML0625	L3
S40T-MTLNL16	S40T-MTLNR16	47	40	300	60	37	26	12°							

内孔车刀复合式
COMPOSITE INTERAL TURNING TOOL

□TQNR/L

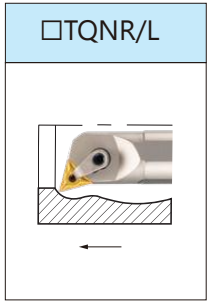

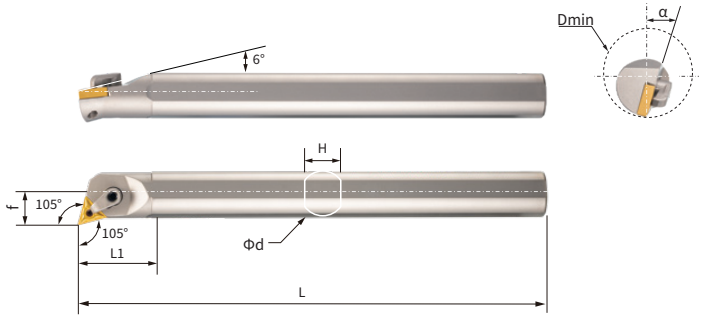

型号Model		尺寸Size (mm)							刀片 Blade	刀垫 Shim	中心销 Center Pin	扳手 Wrench	压板 Platen	双头螺栓 Double Screw	扳手 Wrench
左刀Left	右刀Right	Φ Dmin	Φd	L	L1	H	f	α°							
S16Q-MTQNL16	S16Q-MTQNR16	19.5	16	180	40	14.8	10.5	17°	TN□□ 1604□□	X	CTM510	L2	HL1511	ML0520	L2.5
S18Q-MTQNL16	S18Q-MTQNR16	22	18	180	40	16.6	12	15°		X	CTM510	L2	HL1810	ML0620	L3
S20R-MTQNL16	S20R-MTQNR16	24	20	200	45	18.6	13	15°							
S25S-MTQNL16	S25S-MTQNR16	29.5	25	250	45	23	16	15°							
S32T-MTQNL16	S32T-MTQNR16	38	32	300	54	30	21	15°		MT1603	CTM513	L2	HL1813	ML0625	L3
S40T-MTQNL16	S40T-MTQNR16	47	40	300	60	37	26	15°							

□TUNR/L

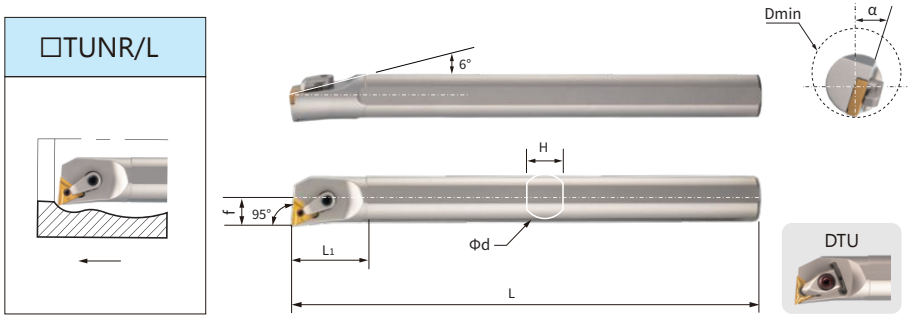

型号Model		尺寸Size (mm)							刀片 Blade	刀垫 Shim	中心销 Center Pin	扳手 Wrench	压板 Platen	双头螺栓 Double Screw	扳手 Wrench
左刀Left	右刀Right	Φ Dmin	Φd	L	L1	H	f	α°							
S16Q-MTUNL16	S16Q-MTUNR16	21	16	180	40	14.8	10.5	17°	TN□□ 1604□□	X	CTM510	L2	HL1511	ML0520	L2.5
S20R-MTUNL16	S20R-MTUNR16	24	20	200	40	18.6	12	15°		X	CTM510	L2	HL1810	ML0620	L3
S25S-MTUNL16	S25S-MTUNR16	29	25	250	45	23	14.5	15°							
S32T-MTUNL16	S32T-MTUNR16	36	32	300	54	30	18	15°							
S40T-MTUNL16	S40T-MTUNR16	48	40	300	60	37	26	15°		MT1603	CTM513	L2	HL1813	ML0625	L3
S50V-MTUNL16	S50V-MTUNR16	59	50	400	60	47	32	12°							
S25S-MTUNL22	S25S-MTUNR22	31	25	250	45	23	17	15°	TN□□ 2204□□	X	CTM613	L3	HL2217	ML0830	L4
S32T-MTUNL22	S32T-MTUNR22	40	32	300	54	30	22	17°		MT2204	CTM617				

型号Model		尺寸Size (mm)							刀片 Blade	刀垫 Shim	刀垫螺钉 Shim Screw	压板 Platen	压板螺钉 Platen Screw	扳手 Wrench
左刀Left	右刀Right	Φ Dmin	Φd	L	L1	H	f	α°						
S20R-DTUNL16	S20R-DTUNR16	24	20	200	40	18.6	12	15	TN□□ 1604□□	X	X	D3220	DM6×21	L3
S25S-DTUNL16	S25S-DTUNR16	29	25	250	45	23	14.5	15						
S32T-DTUNL16	S32T-DTUNR16	36	32	300	54	30	18	15		MT1603	D5×9			
S40T-DTUNL16	S40T-DTUNR16	48	40	300	60	37	26	15						
S50V-DTUNL16	S50V-DTUNR16	59	50	400	60	47	32	12						

□TWNR/L

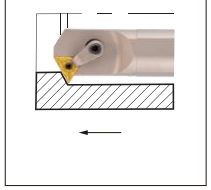

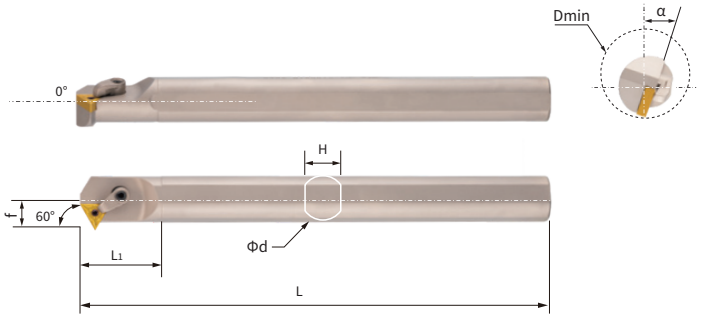

型号Model		尺寸Size (mm)							刀片 Blade	刀垫 Shim	中心销 Center Pin	扳手 Wrench	压板 Platen	双头螺栓 Double Screw	扳手 Wrench
左刀Left	右刀Right	Φ Dmin	Φd	L	L1	H	f	α°							
S16Q-MTWNL16	S16Q-MTWNR16	22	16	180	40	14.8	12	17°	TN□□ 1604□□	X	CTM510	L2	HL1511	ML0520	L2.5
S20R-MTWNL16	S20R-MTWNR16	26	20	200	40	18.6	14	15°		X	CTM510	L2	HL1810	ML0620	L3
S25S-MTWNL16	S25S-MTWNR16	31	25	250	45	23	16.5	12°							
S32T-MTWNL16	S32T-MTWNR16	38	32	300	54	30	20.5	15°		MT1603	CTM513	L2	HL1813	ML0625	L3
S40T-MTWNL16	S40T-MTWNR16	47	40	300	60	37	24.5	15°							

□VQNR/L

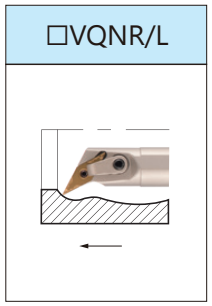

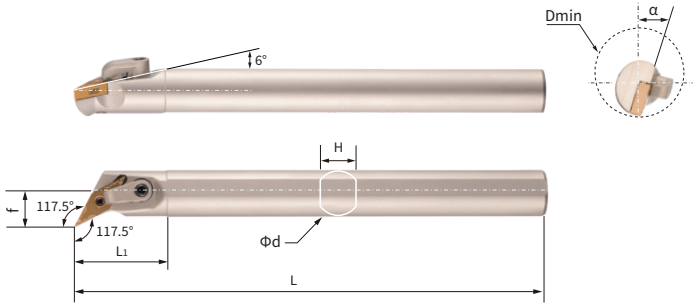

型号Model		尺寸Size (mm)							刀片 Blade	刀垫 Shim	中心销 Center Pin	扳手 Wrench	压板 Platen	双头螺栓 Double Screw	扳手 Wrench
左刀Left	右刀Right	Φ Dmin	Φd	L	L1	H	f	α°							
S20R-MVQNL16	S20R-MVQNR16	26	20	200	40	18.6	14.5	15°	VN□□ 1604□□	X	CTM510	L2	HL2113	ML0620	L3
S25S-MVQNL16	S25S-MVQNR16	34	25	250	45	23	16.5	12°							
S32T-MVQNL16	S32T-MVQNR16	40	32	300	50	30	22	17°		MV1603	CTM513	L2	HL2113	ML0625	L3
S40T-MVQNL16	S40T-MVQNR16	47	40	300	55	37	25	15°							

□VUNR/L

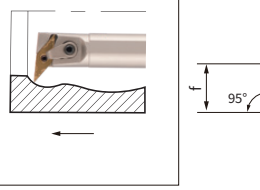

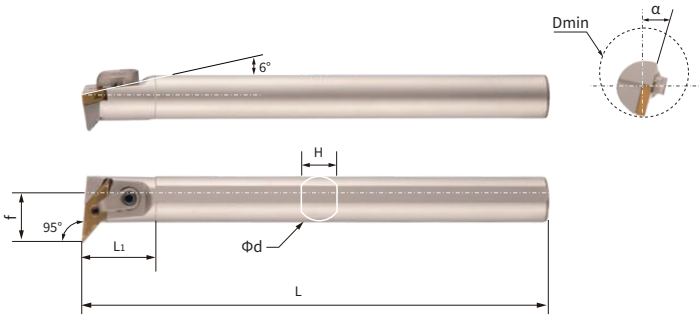

型号Model		尺寸Size (mm)							刀片 Blade	刀垫 Shim	中心销 Center Pin	扳手 Wrench	压板 Platen	双头螺栓 Double Screw	扳手 Wrench
左刀Left	右刀Right	Φ Dmin	Φd	L	L1	H	f	α°							
S20R-MVUNL16	S20R-MVUNR16	31	20	200	40	18.6	19	12°	VN□□ 1604□□	X	CTM510	L2	HL1810	ML0620	L3
S25S-MVUNL16	S25S-MVUNR16	33	25	250	45	23	19	12°							
S32T-MVUNL16	S32T-MVUNR16	41	32	300	50	30	23	17°		MV1603	CTM513	L2	HL2113	ML0625	L3
S40T-MVUNL16	S40T-MVUNR16	49	40	300	55	37	27	15°							

□VWNR/L

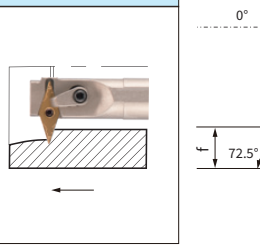

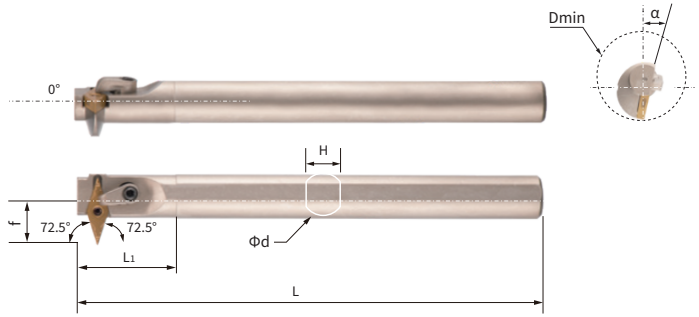

型号Model		尺寸Size (mm)							刀片 Blade	刀垫 Shim	中心销 Center Pin	扳手 Wrench	压板 Platen	双头螺栓 Double Screw	扳手 Wrench
左刀Left	右刀Right	Φ Dmin	Φd	L	L1	H	f	α°							
S20R-MVWNL16	S20R-MVWNR16	34	20	200	40	18.6	21.5	12°	VN□□ 1604□□	X	CTM510	L2	HL1810	ML0620	L3
S25S-MVWNL16	S25S-MVWNR16	37	25	250	45	23	22	12°							
S32T-MVWNL16	S32T-MVWNR16	44	32	300	50	30	25	17°		MV1603	CTM513	L2	HL1813	ML0625	L3

□VXNR/L

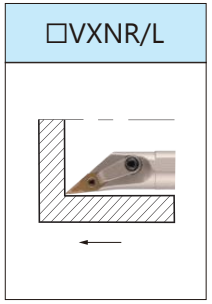

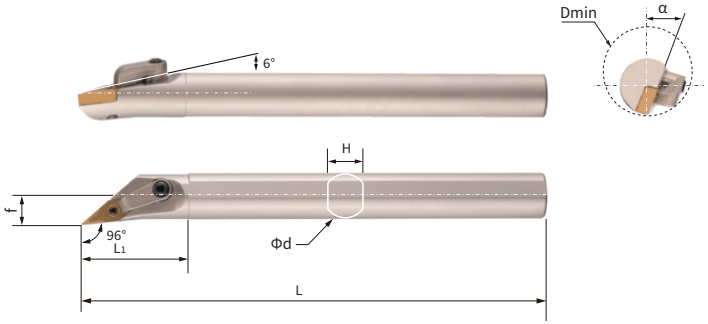

型号Model		尺寸Size (mm)							刀片 Blade	刀垫 Shim	中心销 Center Pin	扳手 Wrench	压板 Platen	双头螺栓 Double Screw	扳手 Wrench
左刀Left	右刀Right	Φ Dmin	Φd	L	L1	H	f	α°							
S20R-MVXNL16	S20R-MVXNR16	24	20	200	40	18.6	12.5	12°	VN□□ 1604□□	X	CTM510	L2	HL2413	ML0620	L3
S25S-MVXNL16	S25S-MVXNR16	30	25	250	45	23	15.5	12°							
S32T-MVXNL16	S32T-MVXNR16	38	32	300	50	30	20	15°		MV1603	CTM513	L2	HL2413	ML0625	L3

□VZNR/L

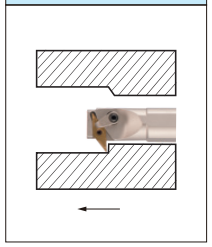

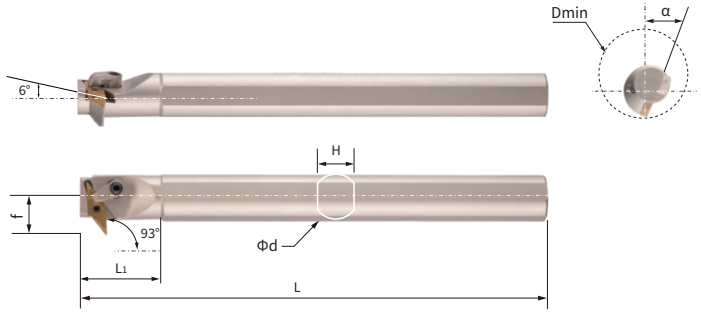

型号Model		尺寸Size (mm)							刀片 Blade	刀垫 Shim	中心销 Center Pin	扳手 Wrench	压板 Platen	双头螺栓 Double Screw	扳手 Wrench
左刀Left	右刀Right	Φ Dmin	Φd	L	L1	H	f	α°							
S20R-MVZNL16	S20R-MVZNR16	32	20	200	40	18.6	20	11°	VN□□ 1604□□	X	CTM510	L2	HL1810	ML0620	L3
S25S-MVZNL16	S25S-MVZNR16	34	25	250	45	23	20	13°							
S32T-MVZNL16	S32T-MVZNR16	41	32	300	50	30	23	15°		MV1603	CTM513	L2	HL1813	ML0625	L3

□WLNR/L

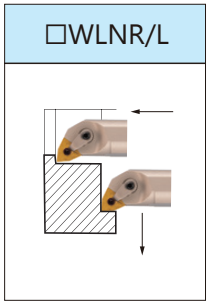

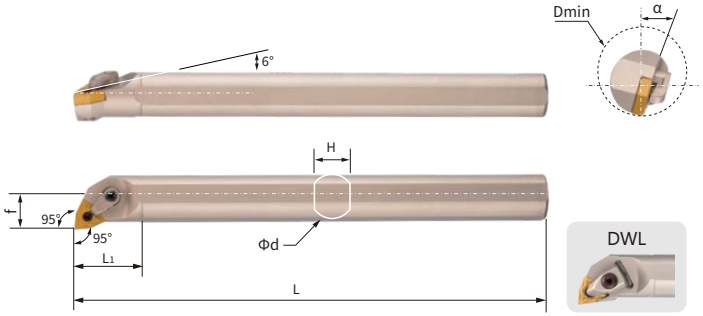

型号Model		尺寸Size (mm)							刀片 Blade	刀垫 Shim	中心销 Center Pin	扳手 Wrench	压板 Platen	双头螺栓 Double Screw	扳手 Wrench
左刀Left	右刀Right	Φ Dmin	Φd	L	L1	H	f	α°							
S16Q-MWLNL06	S16Q-MWLNR06	20.5	16	180	35	14.8	10.5	16°	WN□□ 0604□□	X	CTM510	L2	HL1511	ML0520	L2.5
S20R-MWLNL06	S20R-MWLNR06	24	20	200	40	18.6	12	15°					HL1810	ML0620	L3
S25S-MWLNL06	S25S-MWLNR06	30.5	25	250	45	23	16	12°							
S16Q-MWLNL08	S16Q-MWLNR08	20.5	16	180	35	14.8	10.5	17°	WN□□ 0804□□	X	CTM613	L3	HL1511	ML0520	L2.5
S18Q-MWLNL08	S18Q-MWLNR08	23	18	180	40	16.8	12	16°					HL1810	ML0620	L3
S20R-MWLNL08	S20R-MWLNR08	25	20	200	36	18.6	13	15°							
S25S-MWLNL08	S25S-MWLNR08	31	25	250	50	23	16.5	12°							
S32T-MWLNL08	S32T-MWLNR08	39	32	300	60	30	21	15°		MW0804	CTM617	L3	HL1813	ML0625	L3
S40T-MWLNL08	S40T-MWLNR08	47	40	300	60	37	25	12°							
S50V-MWLNL08	S50V-MWLNR08	57	50	400	60	47	30	12°							

型号Model		尺寸Size (mm)							刀片 Blade	刀垫 Shim	刀垫螺钉 Shim Screw	压板 Platen	压板螺钉 Platen Screw	扳手 Wrench
左刀Left	右刀Right	Φ Dmin	Φd	L	L1	H	f	α°						
S20R-DWLNL06	S20R-DWLNR06	24	20	200	40	18.6	12	15°	WN□□ 0604□□	X	X	D3220	DM6×21	L3
S25S-DWLNL06	S25S-DWLNR06	30.5	25	250	45	23	16	12°						
S20R-DWLNL08	S20R-DWLNR08	25	20	200	36	18.6	13	15°	WN□□ 0804□□	X	X	D5240	DM6×21	L3
S25S-DWLNL08	S25S-DWLNR08	31	25	250	50	23	16.5	12°						
S32T-DWLNL08	S32T-DWLNR08	39	32	300	60	30	21	15°		MW0804	D6×10			
S40T-DWLNL08	S40T-DWLNR08	47	40	300	60	37	25	12°						
S50V-DWLNL08	S50V-DWLNR08	57	50	400	60	47	30	12°						

□WWNR/L

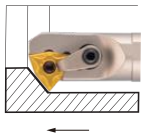

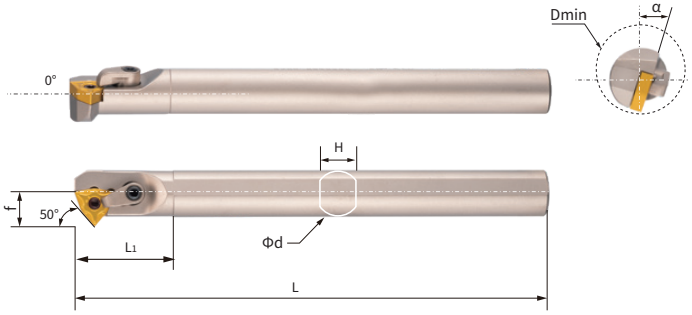

型号Model		尺寸Size (mm)							刀片 Blade	刀垫 Shim	中心销 Center Pin	扳手 Wrench	压板 Platen	双头螺栓 Double Screw	扳手 Wrench
左刀Left	右刀Right	Φ Dmin	Φd	L	L1	H	f	α°							
S20R-MWWNL08	S20R-MWWNR08	26	20	200	30	18.6	14	15°	WN□□ 0804□□	X	CTM613	L3	HL1810	ML0620	L3
S25S-MWWNL08	S25S-MWWNR08	31.5	25	250	50	23	17	12°							
S32T-MWWNL08	S32T-MWWNR08	40	32	300	60	30	22	15°		MW0804	CTM617	L3	HL1813	ML0625	L3

□MW08.MW08Z-R/L

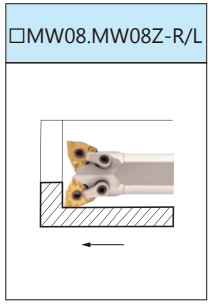

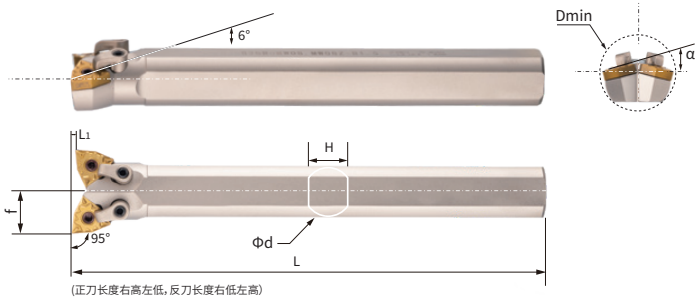

(正刀长度右高左低，反刀长度右低左高)

型号Model		尺寸Size (mm)							刀片 Blade	刀垫 Shim	中心销 Center Pin	扳手 Wrench	压板 Platen	双头螺栓 Double Screw	扳手 Wrench
左刀Left	右刀Right	Φ Dmin	Φd	L	L1	H	f	α°							
S25R-MW08.MW08Z-L1.5	S25R-MW08.MW08Z-R1.5	34	25	200	1.5	21.4	16.5	12.5°	WN□□ 0804□□	X	CTM613	L3	HL1511	ML0520	L2.5
S32S-MW08.MW08Z-L1.5	S32S-MW08.MW08Z-R1.5	39	32	250	1.5	28.4	19	12°		MW0804	CTM617	L3	HL1813	ML0625	L3
S40S-MW08.MW08Z-L1.5	S40S-MW08.MW08Z-R1.5	46	40	250	1.5	36.4	22.5	15°							

SCFC□

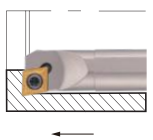

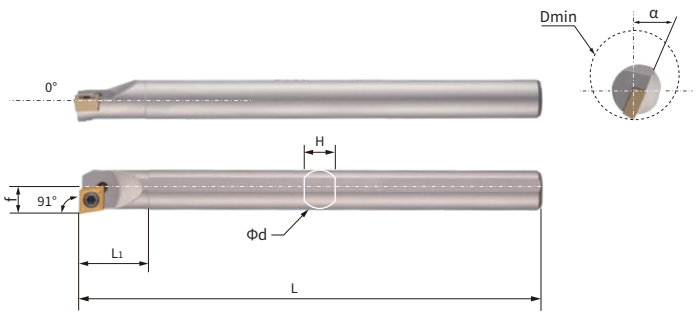

型号Model		尺寸Size (mm)							刀片 Blade	螺丝 Screw	扳手Wrench
左刀 Left	右刀 Right	Φ Dmin	Φd	L	L1	H	f	α°			
S10K-SCFCL06	S10K-SCFCR06	12	10	125	12	9	6	12°	CC□□0602□□	M2.5×6	T8
S12M-SCFCL06	S12M-SCFCR06	14	12	150	18	11	7	10°			
S10K-SCFCL09	S10K-SCFCR09	13	10	125	14	9	7.2	15°	CC□□09T3□□	M4×8	T15
S12M-SCFCL09	S12M-SCFCR09	14	12	150	16	11	7.5	12°			
S16Q-SCFCL09	S16Q-SCFCR09	18	16	180	16	14.8	9.5	8°			
S20R-SCFCL09	S20R-SCFCR09	23	20	200	19	18.6	12	6°		M4×10	T15

内孔车刀螺钉式
SCREW TYPE INTERAL TURNING TOOL

SCKC□

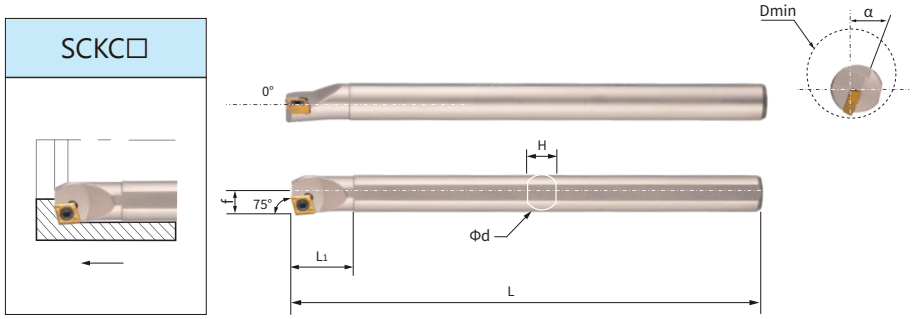

型号Model		尺寸Size (mm)							刀片 Blade	螺丝 Screw	扳手Wrench
左刀 Left	右刀 Right	Φ Dmin	Φd	L	L1	H	f	α°			
S07K-SCKCL06	S07K-SCKCR06	10	7	125	25	6.2	4.5	15°	CC□□0602□□	M2.5×6	T8
S08K-SCKCL06	S08K-SCKCR06	11	8	125	25	7	4.6	12°			
S10K-SCKCL06	S10K-SCKCR06	13	10	125	27	9	5.6	12°			
S12M-SCKCL06	S12M-SCKCR06	15	12	150	30	11	7	10°			
S14N-SCKCL06	S14N-SCKCR06	17	14	160	35	13	8	10°			
S16Q-SCKCL06	S16Q-SCKCR06	19	16	180	35	14.8	9	10°			
S20R-SCKCL06	S20R-SCKCR06	24	20	200	40	18.6	11.5	8°			
S12M-SCKCL09	S12M-SCKCR09	15	12	150	30	11	7	12°	CC□□09T3□□	M4×8	T15
S14N-SCKCL09	S14N-SCKCR09	17	14	160	35	13	8	10°			
S16Q-SCKCL09	S16Q-SCKCR09	20	16	180	35	14.8	9.5	8°			
S18Q-SCKCL09	S18Q-SCKCR09	21	18	180	35	16.6	10	8°			
S20R-SCKCL09	S20R-SCKCR09	24	20	200	40	18.6	11.5	6°		M4×10	
S25S-SCKCL09	S25S-SCKCR09	29	25	250	42	23	14.5	6°			
S32T-SCKCL09	S32T-SCKCR09	38	32	300	45	30	20	4°			
S40T-SCKCL09	S40T-SCKCR09	46	40	300	50	37	24	4°			
S20R-SCKCL12	S20R-SCKCR12	24	20	200	40	18.6	12	6°	CC□□1204□□	M5×10	T20
S25S-SCKCL12	S25S-SCKCR12	29	25	250	42	23	14.5	6°		M5×12	
S32T-SCKCL12	S32T-SCKCR12	38	32	300	45	30	20	4°			

SCLC□

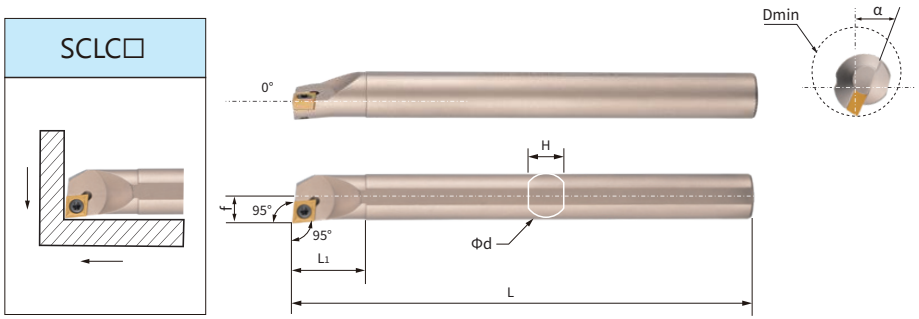

型号Model		尺寸Size (mm)							刀片 Blade	螺丝 Screw	扳手Wrench
左刀 Left	右刀 Right	Φ Dmin	Φd	L	L1	H	f	α°			
S06K-SCLCL06	S06K-SCLCR06	9	6	125	12	5.2	4.5	15°	CC□□0602□□	M2.5×6	T8
S07K-SCLCL06	S07K-SCLCR06	9	7	125	14	6.2	4.5	15°			
S08K-SCLCL06	S08K-SCLCR06	10	8	125	14	7	4.6	12°			
S10K-SCLCL06	S10K-SCLCR06	12	10	125	14	9	5.6	12°			
S12M-SCLCL06	S12M-SCLCR06	14	12	150	16	11	7	10°			
S14N-SCLCL06	S14N-SCLCR06	16	14	160	18	13	8	10°			
S16Q-SCLCL06	S16Q-SCLCR06	18	16	180	32	14.8	9	8°			
S20R-SCLCL06	S20R-SCLCR06	23	20	200	35	18.6	11.5	6°			
S08K-SCLCL09	S08K-SCLCR09	13	8	125	16	7	7.5	15°	CC□□09T3□□	M4×6	T15
S10K-SCLCL09	S10K-SCLCR09	13	10	125	20	9	7	15°			
S12M-SCLCL09	S12M-SCLCR09	14	12	150	25	11	7	12°		M4×8	
S14N-SCLCL09	S14N-SCLCR09	17	14	160	25	13	8.2	10°			
S16Q-SCLCL09	S16Q-SCLCR09	18	16	180	32	14.8	9	8°			
S18Q-SCLCL09	S18Q-SCLCR09	20	18	180	35	16.6	10	6°			
S20R-SCLCL09	S20R-SCLCR09	23	20	200	35	18.6	11.5	6°		M4×10	
S25S-SCLCL09	S25S-SCLCR09	28	25	250	45	23	14.5	6°			
S32T-SCLCL09	S32T-SCLCR09	38	32	300	45	30	20	4°			
S40T-SCLCL09	S40T-SCLCR09	46	40	300	55	37	24	4°			
S20R-SCLCL12	S20R-SCLCR12	24	20	200	30	18.6	12	10°	CC□□1204□□	M5×10	T20
S25S-SCLCL12	S25S-SCLCR12	29	25	250	38	23	14.5	6°		M5×12	
S32T-SCLCL12	S32T-SCLCR12	38	32	300	45	30	20	4°			
S40T-SCLCL12	S40T-SCLCR12	46	40	300	45	37	24	4°			
S50V-SCLCL12	S50V-SCLCR12	57	50	400	60	47	30	2°			

SCL□-A

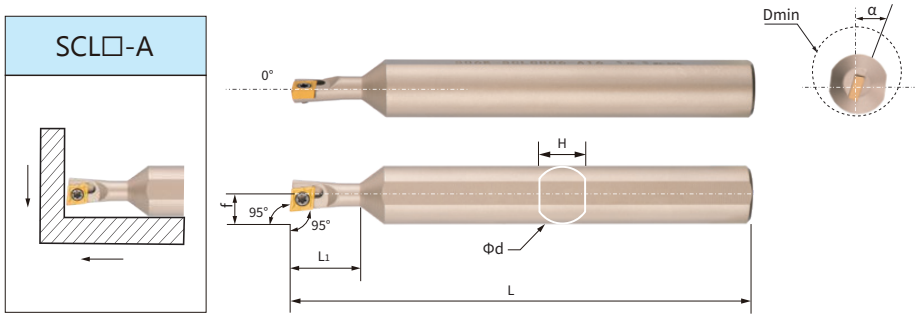

型号Model		尺寸Size (mm)							刀片 Blade	螺丝 Screw	扳手Wrench
左刀 Left	右刀 Right	Φ Dmin	Φd	L	L1	H	f	α°			
S06K-SCLCL06-A12	S06K-SCLCR06-A12	8	12	125	20	11	4.5	15	CC□□0602□□	M2.5×5	T8
S07K-SCLCL06-A12	S07K-SCLCR06-A12	8.5	12	125	20	11	4.5	15			
S08K-SCLCL06-A12	S08K-SCLCR06-A12	9	12	125	20	11	4.6	12		M2.5×6	
S10K-SCLCL06-A12	S10K-SCLCR06-A12	11	12	125	25	11	5.6	12			
S06K-SCLCL06-A16	S06K-SCLCR06-A16	8	16	125	20	14.8	4.5	15		M2.5×5	
S07K-SCLCL06-A16	S07K-SCLCR06-A16	8.5	16	125	20	14.8	4.5	15			
S08K-SCLCL06-A16	S08K-SCLCR06-A16	9	16	125	24	14.8	4.6	12		M2.5×6	
S10K-SCLCL06-A16	S10K-SCLCR06-A16	11	16	125	25	14.8	5.6	12			
S12M-SCLCL06-A16	S12M-SCLCR06-A16	13.5	16	150	32	14.8	7	10			
S12M-SCLCL09-A16	S12M-SCLCR09-A16	13.5	16	150	32	14.8	7	12	CC□□09T3□□	M4×8	T15

SCL□-H

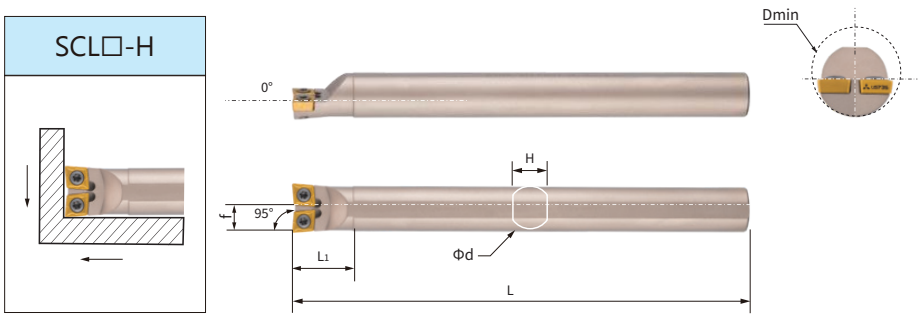

型号Model	尺寸Size (mm)						刀片 Blade	螺丝 Screw	扳手Wrench
	Φ Dmin	Φd	L	L1	H	f			
S20R-SCLCR09H	23	20	200	30	18.6	11	CC□□09T3□□	M4×10	T15
S25S-SCLCR09H	29	25	200	35	23	14			

SCWC□

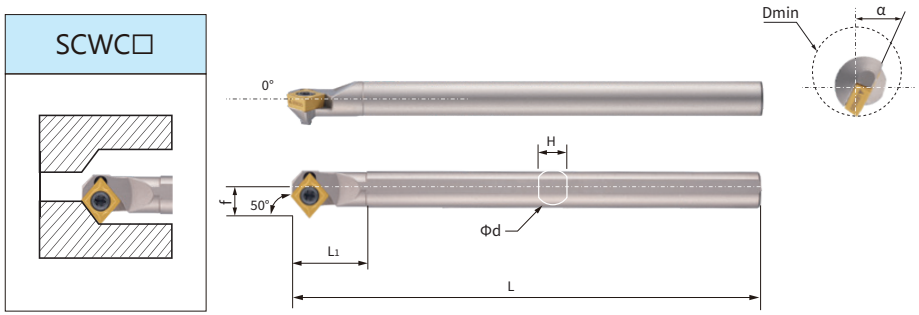

型号Model		尺寸Size (mm)							刀片 Blade	螺丝 Screw	扳手Wrench
左刀 Left	右刀 Right	Φ Dmin	Φd	L	L1	H	f	α°			
S08K-SCWCL06	S08K-SCWCR06	14	8	125	14	7	7.5	15°	CC□□0602□□	M2.5×6	T8
S10K-SCWCL06	S10K-SCWCR06	16	10	125	14	9	8.5	12°			
S12M-SCWCL09	S12M-SCWCR09	18	12	150	16	11	9.5	12°	CC□□09T3□□	M4×8	T15
S16Q-SCWCL09	S16Q-SCWCR09	22	16	180	18	14.8	11.5	10°			
S20R-SCWCL09	S20R-SCWCR09	26	20	200	25	18.6	13.5	8°		M4×10	T15

内孔车刀螺钉式
SCREW TYPE INTERAL TURNING TOOL

SCZC□

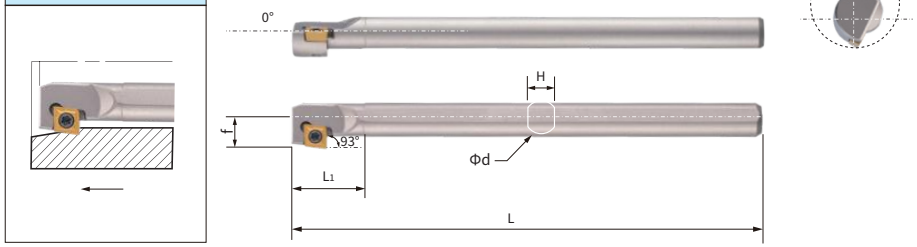

型号Model		尺寸Size (mm)							刀片 Blade	螺丝 Screw	扳手Wrench
左刀 Left	右刀 Right	Φ Dmin	Φd	L	L1	H	f	α°			
S06K-SCZCL04	S06K-SCZCR04	11	6	125	25	5.2	6.2	12°	CC□□04T1□□	M2×4	T6
S07K-SCZCL06	S07K-SCZCR06	12	7	125	25	6.2	6	12°	CC□□0602□□	M2.5×6	T8
S08K-SCZCL06	S08K-SCZCR06	13	8	125	25	7	6.5	12°			
S10K-SCZCL06	S10K-SCZCR06	16	10	125	27	9	8.5	12°			
S12M-SCZCL06	S12M-SCZCR06	18	12	150	30	11	10	10°			
S16Q-SCZCL09	S16Q-SCZCR09	23	16	175	35	14.8	13	10°	CC□□09T3□□	M4×8	T15
S20R-SCZCL09	S20R-SCZCR09	27	20	190	40	18.6	15	8°		M4×10	
S25S-SCZCL09	S25S-SCZCR09	32	25	240	42	23	17.5	6°			

SDJC□

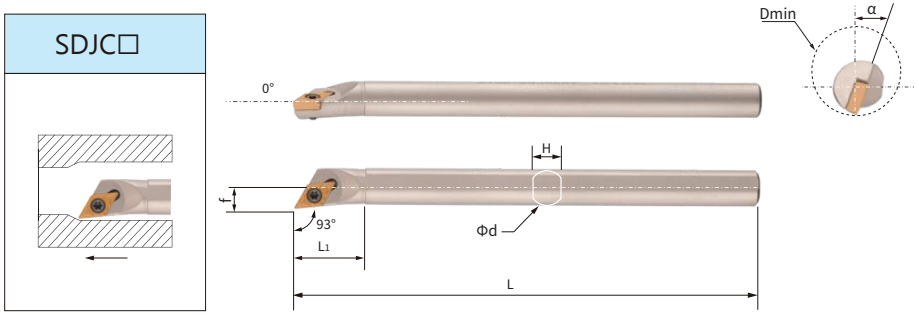

型号Model		尺寸Size (mm)							刀片 Blade	螺丝 Screw	扳手Wrench
左刀 Left	右刀 Right	Φ Dmin	Φd	L	L1	H	f	α°			
S08K-SDJCL07	S08K-SDJCR07	11	8	125	20	7	5	14°	DC□□0702□□	M2.5×6	T8
S10K-SDJCL07	S10K-SDJCR07	13	10	125	25	10	6	10°			
S12M-SDJCL07	S12M-SDJCR07	15	12	150	30	11	7	8°			
S14N-SDJCL07	S14N-SDJCR07	17	14	160	30	13	8	8°			
S16Q-SDJCL07	S16Q-SDJCR07	19	16	180	30	14.8	9	8°			
S20R-SDJCL07	S20R-SDJCR07	24	20	200	30	18.6	11.5	8°			
S16Q-SDJCL11	S16Q-SDJCR11	19	16	180	40	14.8	9	8°	DC□□11T3□□	M4×8	T15
S20R-SDJCL11	S20R-SDJCR11	24	20	200	40	18.6	11.5	6°		M4×10	T15
S25S-SDJCL11	S25S-SDJCR11	29	25	250	45	23	14	6°			
S32T-SDJCL11	S32T-SDJCR11	38	32	300	50	30	20	6°			
S40T-SDJCL11	S40T-SDJCR11	46	40	300	50	37	24	4°			

内孔车刀螺钉式
SCREW TYPE INTERAL TURNING TOOL

SDQC□

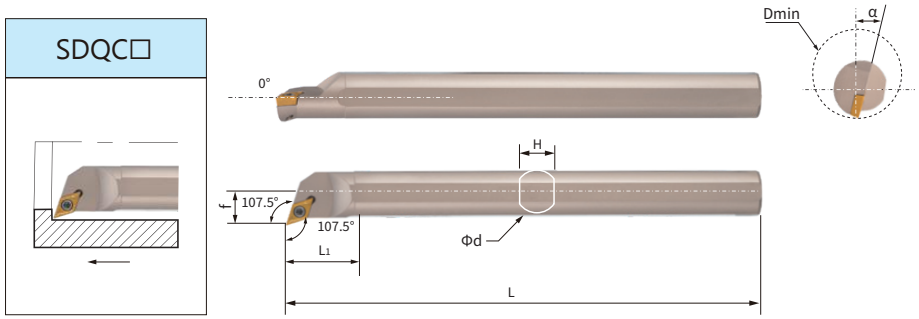

型号Model		尺寸Size (mm)							刀片 Blade	螺丝 Screw	扳手Wrench
左刀 Left	右刀 Right	Φ Dmin	Φd	L	L1	H	f	α°			
S08K-SDQCL07	S08K-SDQCR07	12	8	125	20	7	7	15°	DC□□0702□□	M2.5×6	T8
S10K-SDQCL07	S10K-SDQCR07	13	10	125	23	9	7	10°			
S12M-SDQCL07	S12M-SDQCR07	14.5	12	150	30	11	7.5	10°			
S14N-SDQCL07	S14N-SDQCR07	17.5	14	160	30	13	9.5	8°			
S16Q-SDQCL07	S16Q-SDQCR07	19	16	180	35	14.8	10	6°			
S18Q-SDQCL07	S18Q-SDQCR07	21	18	180	35	16.8	11	6°			
S20R-SDQCL07	S20R-SDQCR07	23	20	200	40	18.6	12	6°			
S25S-SDQCL07	S25S-SDQCR07	28	25	250	40	23	14.5	6°			
S14N-SDQCL11	S14N-SDQCR11	18	14	160	30	13	10	8°	DC□□11T3□□	M4×10	T15
S16Q-SDQCL11	S16Q-SDQCR11	20	16	180	35	14.8	11	8°			
S18Q-SDQCL11	S18Q-SDQCR11	22	18	180	35	16.8	12	6°			
S20R-SDQCL11	S20R-SDQCR11	24	20	200	40	18.6	13	6°			
S25S-SDQCL11	S25S-SDQCR11	29.5	25	250	40	23	16	6°			
S32T-SDQCL11	S32T-SDQCR11	37	32	300	43	30	20	4°			
S40T-SDQCL11	S40T-SDQCR11	46	40	300	50	37	25	4°			

SDUC□

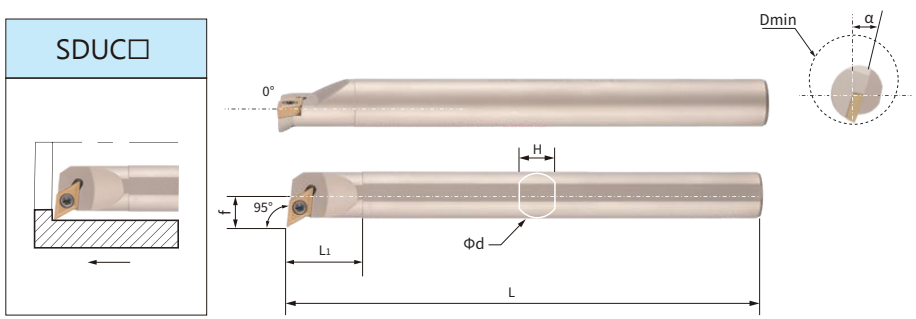

型号Model		尺寸Size (mm)							刀片 Blade	螺丝 Screw	扳手Wrench
左刀 Left	右刀 Right	Φ Dmin	Φd	L	L1	H	f	α°			
S08K-SDUCL07	S08K-SDUCR07	13	8	125	20	7	8	12°	DC□□0702□□	M2.5×6	T8
S10K-SDUCL07	S10K-SDUCR07	13.2	10	125	25	9	7.2	10°			
S12M-SDUCL07	S12M-SDUCR07	16	12	150	28	11	9	10°			
S14N-SDUCL07	S14N-SDUCR07	18	14	160	30	13	10	8°			
S16Q-SDUCL07	S16Q-SDUCR07	20.5	16	180	35	14.8	11.5	8°			
S18Q-SDUCL07	S18Q-SDUCR07	22	18	180	35	16.8	12	6°			
S20R-SDUCL07	S20R-SDUCR07	24	20	200	40	18.4	13	6°			
S25S-SDUCL07	S25S-SDUCR07	29	25	250	40	23	15.5	4°			
S14N-SDUCL11	S14N-SDUCR11	19	14	160	30	13	11	8°	DC□□11T3□□	M4×8	T15
S16Q-SDUCL11	S16Q-SDUCR11	22	16	180	30	14.8	13	8°			
S18Q-SDUCL11	S18Q-SDUCR11	23.5	18	180	35	16.8	13.5	6°			
S20R-SDUCL11	S20R-SDUCR11	25	20	200	40	18.6	14	6°		M4×10	
S25S-SDUCL11	S25S-SDUCR11	31	25	250	40	23	17.5	4°			
S32T-SDUCL11	S32T-SDUCR11	38	32	300	45	30	21	4°			
S40T-SDUCL11	S40T-SDUCR11	46	40	300	50	37	25	4°			

B
内孔车刀

内孔车刀螺钉式
SCREW TYPE INTERAL TURNING TOOL

SDWC□

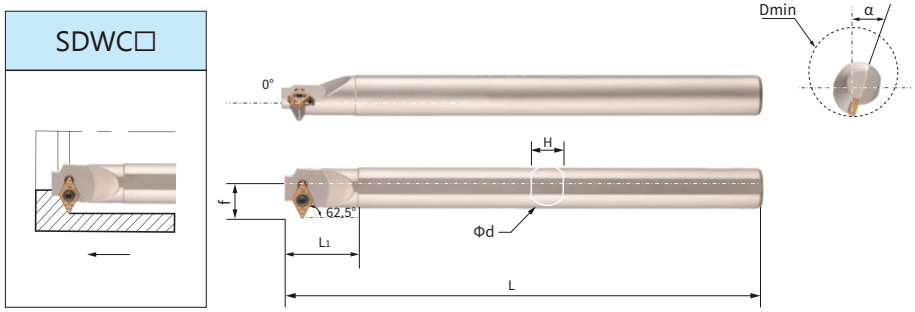

型号Model		尺寸Size (mm)							刀片 Blade	螺丝 Screw	扳手Wrench
左刀 Left	右刀 Right	Φ Dmin	Φd	L	L1	H	f	α°			
S08K-SDWCL07	S08K-SDWCR07	15	8	125	28	7	10	12°	DC□□0702□□	M2.5×6	T8
S10K-SDWCL07	S10K-SDWCR07	15	10	125	30	9	9	12°			
S12M-SDWCL07	S12M-SDWCR07	19	12	150	30	11	10.5	10°			
S14N-SDWCL07	S14N-SDWCR07	20	14	160	30	13	10.5	8°			
S16Q-SDWCL07	S16Q-SDWCR07	23	16	180	40	14.8	12.5	8°			
S20R-SDWCL07	S20R-SDWCR07	27	20	200	40	18.6	14.5	6°			
S16Q-SDWCL11	S16Q-SDWCR11	25	16	180	40	14.8	14.5	8°	DC□□11T3□□	M4×8	T15
S20R-SDWCL11	S20R-SDWCR11	27	20	200	40	18.6	14.5	6°		M4×10	T15
S25S-SDWCL11	S25S-SDWCR11	33	25	250	45	23	18	4°			
S32T-SDWCL11	S32T-SDWCR11	41	32	300	50	30	23	4°			
S40T-SDWCL11	S40T-SDWCR11	49	40	300	50	37	27	4°			

SDXC□

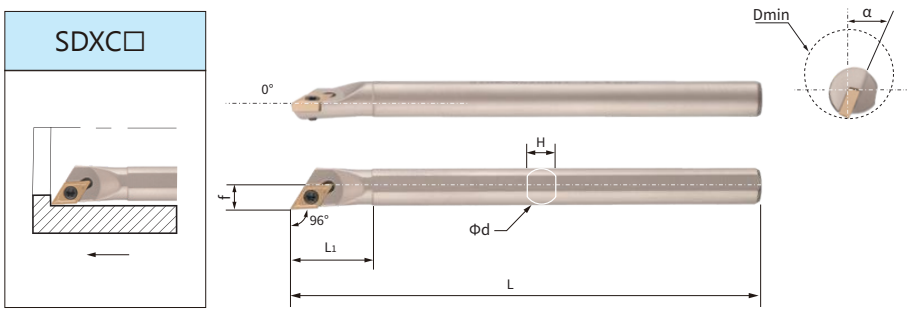

型号Model		尺寸Size (mm)							刀片 Blade	螺丝 Screw	扳手Wrench
左刀 Left	右刀 Right	Φ Dmin	Φd	L	L1	H	f	α°			
S08K-SDXCL07	S08K-SDXCR07	11	8	125	20	7	5.5	14°	DC□□0702□□	M2.5×6	T8
S10K-SDXCL07	S10K-SDXCR07	13	10	125	25	10	6.5	10°			
S12M-SDXCL07	S12M-SDXCR07	15	12	150	30	11	7.5	8°			
S14N-SDXCL07	S14N-SDXCR07	17	14	160	30	13	8.5	8°			
S16Q-SDXCL07	S16Q-SDXCR07	20	16	180	30	14.8	9.5	8°			
S20R-SDXCL07	S20R-SDXCR07	24	20	200	30	18.6	12	8°			
S16Q-SDXCL11	S16Q-SDXCR11	20	16	180	40	14.8	9.5	8°	DC□□11T3□□	M4×8	T15
S20R-SDXCL11	S20R-SDXCR11	24	20	200	40	18.6	12	8°		M4×10	T15
S25S-SDXCL11	S25S-SDXCR11	29	25	250	45	23	14.5	6°			
S32T-SDXCL11	S32T-SDXCR11	38	32	300	50	30	20	6°			
S40T-SDXCL11	S40T-SDXCR11	46	40	300	50	37	24	4°			

B
内孔车刀

内孔车刀螺钉式
SCREW TYPE INTERAL TURNING TOOL

SDZC□

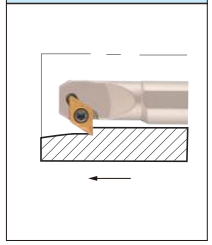

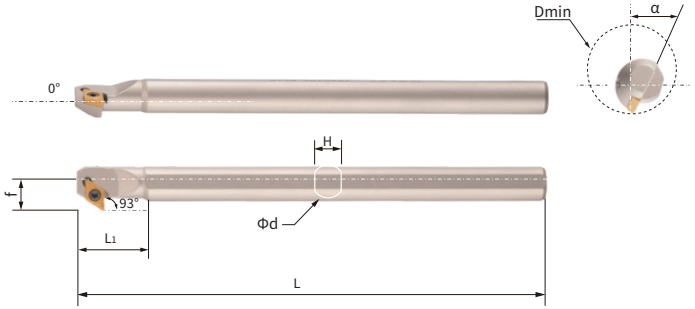

型号Model		尺寸Size (mm)							刀片 Blade	螺丝 Screw	扳手Wrench
左刀 Left	右刀 Right	Φ Dmin	Φd	L	L1	H	f	α°			
S08K-SDZCL07	S08K-SDZCR07	14	8	125	28	7	8.2	10°	DC□□0702□□	M2.5×6	T8
S10K-SDZCL07	S10K-SDZCR07	15	10	125	30	9	8	10°			
S12M-SDZCL07	S12M-SDZCR07	18	12	150	30	11	9.5	10°			
S14N-SDZCL07	S14N-SDZCR07	20	14	160	30	13	10.5	10°			
S16Q-SDZCL07	S16Q-SDZCR07	22	16	180	40	14.8	11.5	8°			
S20R-SDZCL07	S20R-SDZCR07	26	20	200	40	18.6	14	8°			
S16Q-SDZCL11	S16Q-SDZCR11	22	16	180	40	14.8	12	8°	DC□□11T3□□	M4×10	T15
S20R-SDZCL11	S20R-SDZCR11	27	20	200	40	18.6	14.5	8°			
S25S-SDZCL11	S25S-SDZCR11	32	25	250	45	23	17.5	6°			
S32T-SDZCL11	S32T-SDZCR11	40	32	300	50	30	21.5	6°			
S40T-SDZCL11	S40T-SDZCR11	48	40	300	50	37	25.5	6°			
S50V-SDZCL11	S50V-SDZCR11	59	50	400	50	47	32	6°			

SSKC□

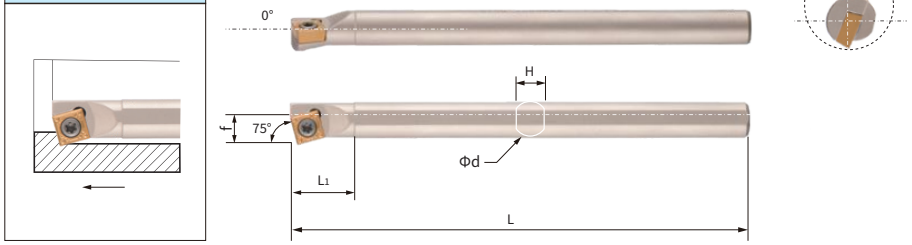

型号Model		尺寸Size (mm)							刀片 Blade	螺丝 Screw	扳手Wrench
左刀 Left	右刀 Right	Φ Dmin	Φd	L	L1	H	f	α°			
S12M-SSKCL09	S12M-SSKCR09	16	12	150	30	11	8.2	12	SC□□09T3□□	M4×8	T15
S14N-SSKCL09	S14N-SSKCR09	18	14	160	35	13	9	10			
S16Q-SSKCL09	S16Q-SSKCR09	21	16	180	35	14.8	10.5	8			
S20R-SSKCL09	S20R-SSKCR09	25	20	200	40	18.6	12.5	8		M4×10	
S25S-SSKCL09	S25S-SSKCR09	29	25	250	40	23	14.5	6			

内孔车刀螺钉式
SCREW TYPE INTERAL TURNING TOOL

SSSC□

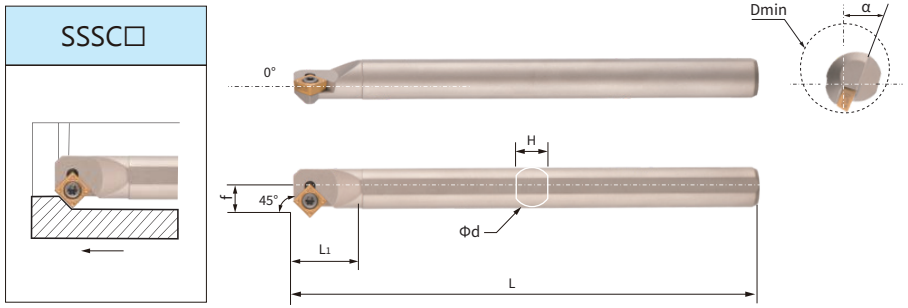

型号Model		尺寸Size (mm)							刀片 Blade	螺丝 Screw	扳手Wrench
左刀 Left	右刀 Right	Φ Dmin	Φd	L	L1	H	f	α°			
S12M-SSSCL09	S12M-SSSCR09	17	12	150	30	11	9	12	SC□□09T3□□	M4×8	T15
S14N-SSSCL09	S14N-SSSCR09	20	14	160	35	13	10.5	8			
S16Q-SSSCL09	S16Q-SSSCR09	22	16	180	35	14.8	11.5	8			
S20R-SSSCL09	S20R-SSSCR09	26	20	200	40	18.6	13.5	8		M4×10	
S25S-SSSCL09	S25S-SSSCR09	32	25	250	40	23	17	8			
S32T-SSSCL09	S32T-SSSCR09	40	32	300	45	30	21.5	4			
S25S-SSSCL12	S25S-SSSCR12	32	25	250	40	23	17	8	SC□□1204□□	M5×12	T20
S32T-SSSCL12	S32T-SSSCR12	40	32	300	45	30	21.5	4			

STF□□

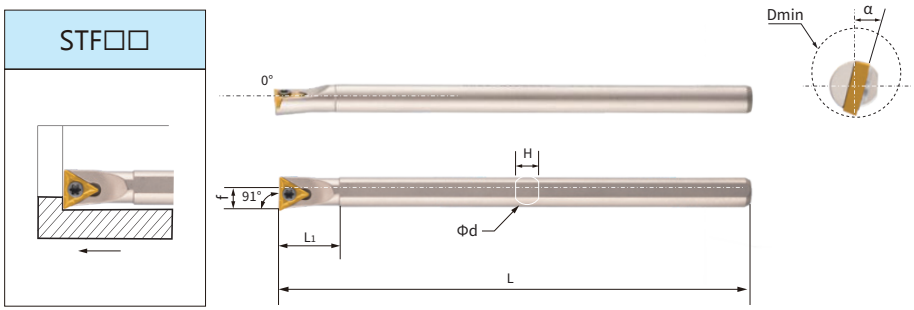

型号Model		尺寸Size (mm)									刀片 Blade	螺丝 Screw	刀片 Blade	螺丝 Screw	扳手 Wrench
左刀 Left	右刀 Right	Φ Dmin	Φd	L	L1	H	f	α° B°	C°	P°					
S06K-STFBL06	S06K-STFBR06	7	6	125	8	5.2	3.4	12	/	/	TB□□ 0601□□	M2×5	×	×	T6
S07K-STFBL06	S07K-STFBR06	9	7	125	10	6.2	4	8	/	/					
S08K-STFBL06	S08K-STFBR06	10	8	125	10	7	5	8	/	/					
S10K-STFBL06	S10K-STFBR06	12	10	125	10	9	5.6	4	/	/					
S12M-STFBL06	S12M-STFBR06	14	12	150	12	11	7	4	/	/					
S08K-STF□L09	S08K-STF□R09	10	8	125	23	7	5	/	12	10	TC□□ 0902□□	M2.5×5	TP□□ 0902□□	M2.5×5	T8
S10K-STF□L09	S10K-STF□R09	12	10	125	24	9	6	/	10	6		M2.5×6		M2.5×6	
S12M-STF□L09	S12M-STF□R09	14	12	150	24	11	7	/	8	6					
S14N-STF□L09	S14N-STF□R09	16	14	160	27	13	8	/	4	4					
S10K-STF□L11	S10K-STF□R11	12	10	125	24	7	6	/	10	10	TC□□ 1102□□	M2.5×6	TP□□ 1103□□	M3×6	T8
S12M-STF□L11	S12M-STF□R11	14	12	150	24	11	7	/	10	8					
S14N-STF□L11	S14N-STF□R11	16	14	160	27	13	8	/	6	4					
S16Q-STF□L11	S16Q-STF□R11	19	16	180	30	14.8	9.5	/	6	4					
S18Q-STF□L11	S18Q-STF□R11	21	18	180	30	16.6	10.5	/	4	4					
S20R-STF□L11	S20R-STF□R11	23	20	200	35	18.6	11.5	/	4	4				M3×8	
S25S-STF□L11	S25S-STF□R11	28	25	250	40	23	14	/	4	2					
S32T-STF□L11	S32T-STF□R11	35	32	300	40	30	18	/	2	2					
S40T-STF□L11	S40T-STF□R11	45	40	300	45	37	24	/	2	2					
S16Q-STFCL16	S16Q-STFCR16	19	16	180	30	14.8	9.5	/	6	/	TC□□ 16T3□□	M4×8	×	×	T15
S18Q-STFCL16	S18Q-STFCR16	21	18	180	30	16.6	10.5	/	6	/					
S20R-STFCL16	S20R-STFCR16	23	20	200	35	18.6	11.5	/	6	/		M4×10			
S25S-STFCL16	S25S-STFCR16	28	25	250	40	23	14	/	4	/					
S32T-STFCL16	S32T-STFCR16	37	32	300	40	30	20	/	4	/					
S40T-STFCL16	S40T-STFCR16	45	40	300	45	37	24	/	2	/					

内孔车刀螺钉式
SCREW TYPE INTERAL TURNING TOOL

STFNR/L

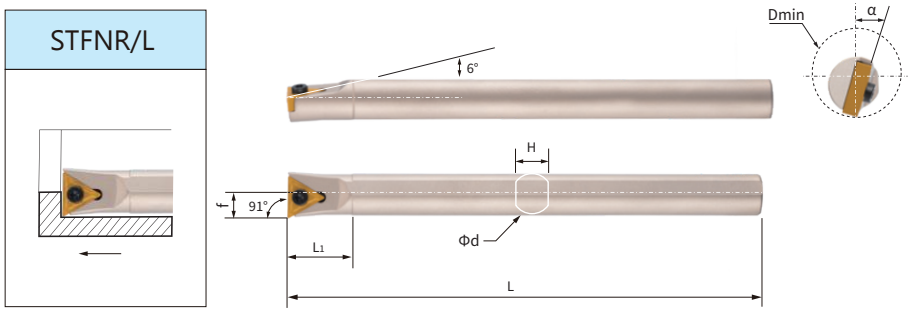

型号Model		尺寸Size (mm)							刀片 Blade	螺丝 Screw	扳手Wrench
左刀 Left	右刀 Right	Φ Dmin	Φd	L	L1	H	f	α°			
S16Q-STFNL16	S16Q-STFNR16	19	16	180	31	14.8	9	17°	TN□□1604□□	M3.5×13.5T	T15
S20R-STFNL16	S20R-STFNR16	22.5	20	200	30	18.6	11.5	15°			
S25S-STFNL16	S25S-STFNR16	29	25	250	30	23	14	15°			
S32T-STFNL16	S32T-STFNR16	37	32	300	30	30	18	15°			

STF□□-A

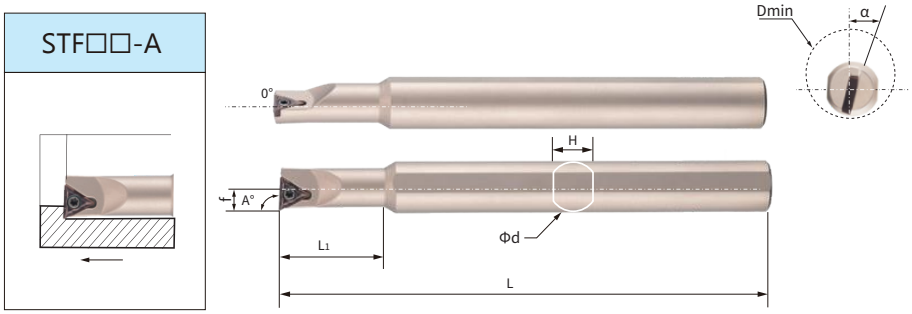

型号Model		尺寸Size (mm)									刀片 Blade	螺丝 Screw	扳手 Wrench
左刀 Left	右刀 Right	Φ Dmin	Φd	L	L1	H	f	A	α° C°	α° P°			
S08K-STFCL09-A16	S08K-STFCR09-A16	10	16	125	23	14.8	5	91°	14°	/	TC□□0902□□	M2.5×5	T8
S10K-STFCL11-A16	S10K-STFCR11-A16	12	16	125	25	14.8	6	91°	12°	/	TC□□1102□□	M2.5×6	
S12M-STFCL11-A16	S12M-STFCR11-A16	14	16	150	32	14.8	7	91°	10°	/			
S08K-STUCL09-A16	S08K-STUCR09-A16	10	16	125	23	14.8	5	95°	15°	/	TP□□0902□□	M2.5×5	
S10K-STUCL11-A16	S10K-STUCR11-A16	12	16	125	25	14.8	6	95°	12°	/	TC□□1102□□	M2.5×6	
S12M-STUCL11-A16	S12M-STUCR11-A16	14	16	150	32	14.8	7	95°	10°	/			
S08K-STUPL09-A16	S08K-STUPR09-A16	10	16	125	25	14.8	5	95°	/	10°	TP□□0902□□	M2.5×5	

STUB□

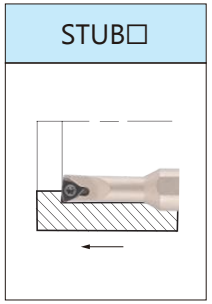

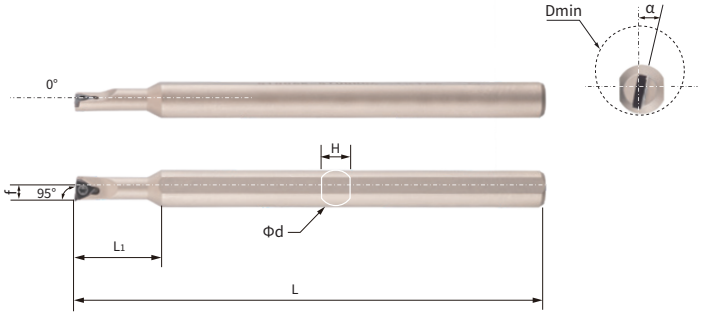

型号Model		尺寸Size (mm)							刀片 Blade	螺丝 Screw	扳手Wrench
左刀 Left	右刀 Right	Φ Dmin	Φd	L	L1	H	f	α°			
S0805K-STUBL06	S0805K-STUBR06	7	8	125	18	7	3.2	15°	TBGT060102	M2×4	T6
S0806K-STUBL06	S0806K-STUBR06	8	8	125	20	7	3.5	12°			
S1006K-STUBL06	S1006K-STUBR06	8	10	125	20	9	3.5	12°			
S1206K-STUBL06	S1206K-STUBR06	8	12	125	20	11	3.5	12°			
S1207K-STUBL06	S1207K-STUBR06	9	12	125	20	11	4	12°			
S1606K-STUBL06	S1606K-STUBR06	8	16	125	20	14.8	3.5	12°			
S1607K-STUBL06	S1607K-STUBR06	9	16	125	20	14.8	4	12°			

STUC□

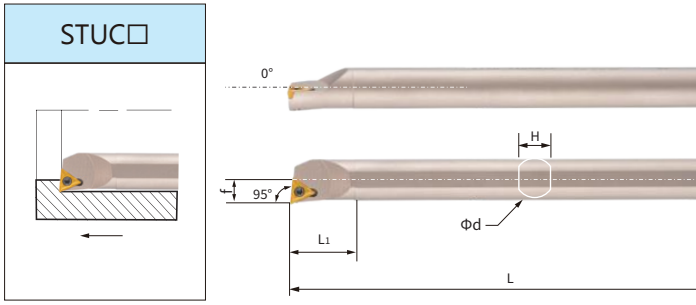

型号Model		尺寸Size (mm)									刀片 Blade	螺丝 Screw	刀片 Blade	螺丝 Screw	扳手 Wrench
左刀 Left	右刀 Right	Φ Dmin	Φd	L	L1	H	f	α° B°	α° C°	α° P°					
S06K-STUBL06	S06K-STUBR06	7	6	125	8	5.2	3.4	12	/	/	TB□□ 0601□□	M2×5	×	×	T6
S07K-STUBL06	S07K-STUBR06	9	7	125	10	6.2	4	8	/	/					
S08K-STUBL06	S08K-STUBR06	10	8	125	10	7	5	8	/	/					
S10K-STUBL06	S10K-STUBR06	12	10	125	10	9	5.6	4	/	/					
S12M-STUBL06	S12M-STUBR06	14	12	150	12	11	7	4	/	/					
S08K-STU□L09	S08K-STU□R09	10	8	125	23	7	5	/	12	10	TC□□ 0902□□	M2.5×5	TP□□ 0902□□	M2.5×5	T8
S10K-STU□L09	S10K-STU□R09	12	10	125	24	9	6	/	10	6					
S12M-STU□L09	S12M-STU□R09	14	12	150	24	11	7	/	8	6		M2.5×6		M2.5×6	
S14N-STU□L09	S14N-STU□R09	16	14	160	27	13	8	/	4	4					
S10K-STU□L11	S10K-STU□R11	12	10	125	24	7	6	/	10	10	TC□□ 1102□□	M2.5×6	TP□□ 1103□□	M3×6	T8
S12M-STU□L11	S12M-STU□R11	14	12	150	24	11	7	/	10	8					
S14N-STU□L11	S14N-STU□R11	16	14	160	27	13	8	/	6	4					
S16Q-STU□L11	S16Q-STU□R11	19	16	180	30	14.8	9.5	/	6	4					
S18Q-STU□L11	S18Q-STU□R11	21	18	180	30	16.6	10.5	/	4	4					
S20R-STU□L11	S20R-STU□R11	23	20	200	35	18.6	11.5	/	4	4					
S25S-STU□L11	S25S-STU□R11	28	25	250	40	23	14	/	4	2				M3×8	
S32T-STU□L11	S32T-STU□R11	35	32	300	40	30	18	/	2	2					
S40T-STU□L11	S40T-STU□R11	45	40	300	45	37	24	/	2	2					
S16Q-STUCL16	S16Q-STUCR16	19	16	180	30	14.8	9.5	/	6	/	TC□□ 16T3□□	M4×8	×	×	T15
S18Q-STUCL16	S18Q-STUCR16	21	18	180	30	16.6	10.5	/	6	/					
S20R-STUCL16	S20R-STUCR16	23	20	200	35	18.6	11.5	/	6	/		M4×10			
S25S-STUCL16	S25S-STUCR16	28	25	250	40	23	14	/	4	/					
S32T-STUCL16	S32T-STUCR16	37	32	300	40	30	20	/	4	/					
S40T-STUCL16	S40T-STUCR16	45	40	300	45	37	24	/	2	/					

内孔车刀螺钉式
SCREW TYPE INTERAL TURNING TOOL

STUN□

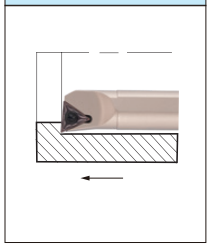

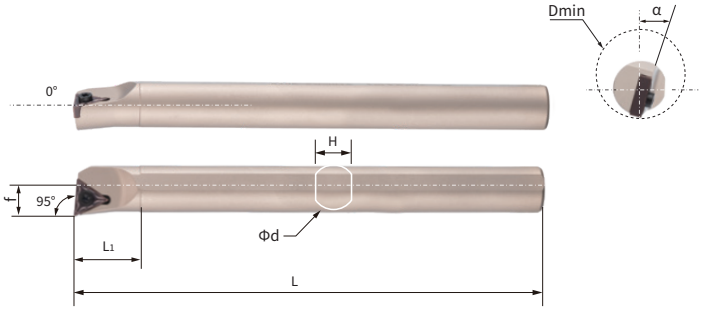

型号Model		尺寸Size (mm)							刀片 Blade	螺丝 Screw	扳手Wrench
左刀 Left	右刀 Right	Φ Dmin	Φd	L	L1	H	f	α°			
S16Q-STUNL16	S16Q-STUNR16	19	16	180	31	14.8	9	17°	TN□□1604□□	M3.5×13.5T	T15
S20R-STUNL16	S20R-STUNR16	24	20	200	30	18.6	12	15°			
S25S-STUNL16	S25S-STUNR16	29	25	250	30	23	14.5	15°			
S32T-STUNL16	S32T-STUNR16	36	32	300	30	30	18	15°			

STQC□

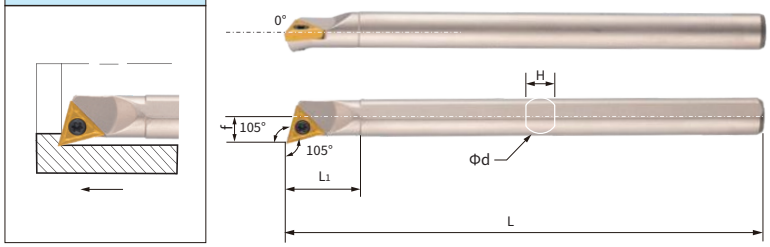

型号Model		尺寸Size (mm)							刀片 Blade	螺丝 Screw	扳手Wrench
左刀 Left	右刀 Right	Φ Dmin	Φd	L	L1	H	f	α°			
S10K-STQCL11	S10K-STQCR11	14	10	125	23	9	7	12°	TC□□1102□□	M2.5×6	T8
S12M-STQCL11	S12M-STQCR11	16	12	150	24	11	8	10°			
S14N-STQCL11	S14N-STQCR11	18	14	160	24	13	9	6°			
S16Q-STQCL11	S16Q-STQCR11	20	16	180	27	14.8	10	6°			

STQN□

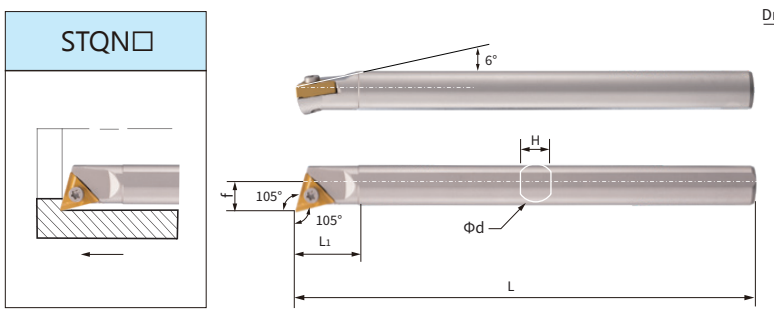

型号Model		尺寸Size (mm)							刀片 Blade	螺丝 Screw	扳手Wrench
左刀 Left	右刀 Right	Φ Dmin	Φd	L	L1	H	f	α°			
S16Q-STQNL16	S16Q-STQNR16	20	16	180	26	14.8	10.5	17°	TN□□1604□□	M3.5×13.5T	T15
S18Q-STQNL16	S18Q-STQNR16	22	18	180	28	16.6	12	15°			
S20R-STQNL16	S20R-STQNR16	24	20	200	28	18.6	13	15°			

内孔车刀螺钉式
SCREW TYPE INTERAL TURNING TOOL

STW□□

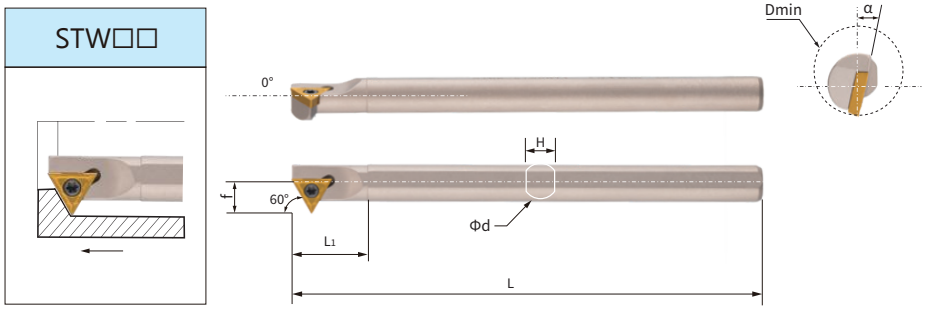

型号Model		尺寸Size (mm)								刀片 Blade	螺丝 Screw	扳手Wrench
左刀 Left	右刀 Right	Φ Dmin	Φd	L	L1	H	f	α° C°	α° P°			
S08K-STWCL09	S08K-STWCR09	13	8	125	23	7	6.5	12°		TC□□0902□□	M2.5×5	T8
S10K-STWCL09	S10K-STWCR09	15	10	125	24	9	7.5	10°				
S12M-STWCL09	S12M-STWCR09	17	12	150	24	11	8.5	6°				
S14N-STWCL09	S14N-STWCR09	19	14	160	27	13	9.5	6°				
S16Q-STWCL16	S16Q-STWCR16	22	16	180	35	18.6	12	6°		TC□□16T3□□	M4×10	T15
S20R-STWCL16	S20R-STWCR16	26	20	200	40	23	14	6°				
S25S-STWCL16	S25S-STWCR16	32	25	250	40	30	17	4°				
S10K-STW□R11	S10K-STW□L11	15	10	125	24	7	8	12°	8°	TC□□1102□□ TP□□1103□□	M2.5×6 M3×6	T8
S12M-STW□R11	S12M-STW□L11	17	12	150	24	11	9	8°	4°			
S14N-STW□R11	S14N-STW□L11	19	14	160	27	13	10	6°	4°			
S16Q-STW□R11	S16Q-STW□L11	21	16	180	30	14.8	11	6°	2°			
S20R-STW□R11	S20R-STW□L11	25	20	200	30	16.6	13	4°	2°			

STW□□-A

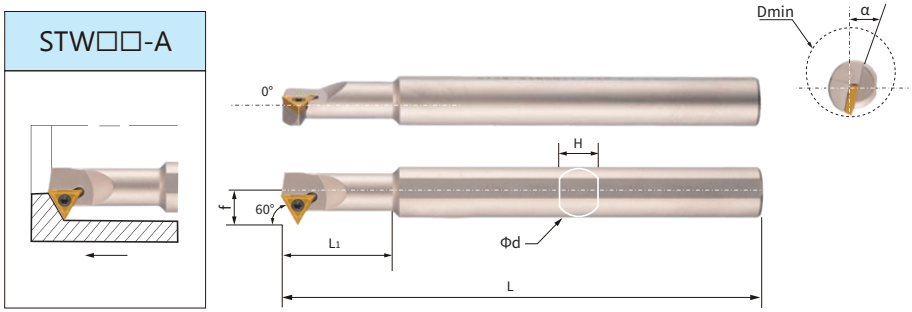

型号Model		尺寸Size (mm)								刀片 Blade	螺丝 Screw	扳手Wrench
左刀 Left	右刀 Right	Φ Dmin	Φd	L	L1	H	f	C°	P°			
S08K-STWCL09-A16	S08K-STWCR09-A16	12	16	125	23	14.8	6.5	13°		TC□□0902□□	M2.5×5	T8
S08K-STWPL09-A20	S08K-STWPR09-A20	12	20	125	21	18.6	6.5		12°	TP□□0902□□		
S10K-STWCL11-A16	S10K-STWCR11-A16	14	16	125	30	14.8	8	12°		TC□□1102□□	M2.5×6	
S10K-STWCL11-A20	S10K-STWCR11-A20	14	20	125	30	18.6	8	12°				
S12M-STWCL11-A16	S12M-STWCR11-A16	17	16	150	35	14.8	10	10°				

STWN□

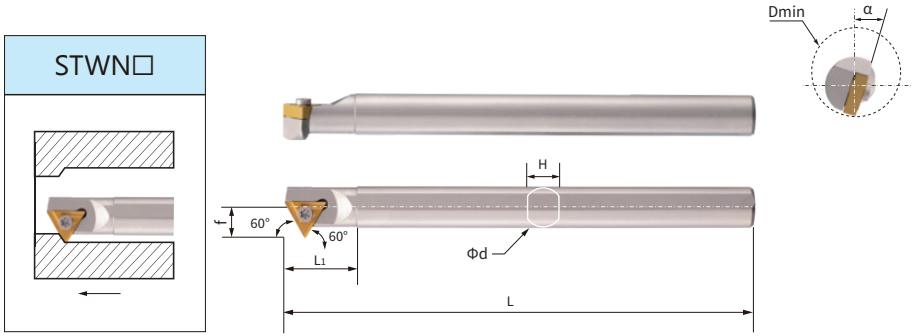

型号Model		尺寸Size (mm)							刀片 Blade	螺丝 Screw	扳手Wrench
左刀 Left	右刀 Right	Φ Dmin	Φd	L	L1	H	f	α°			
S16Q-STWNL16	S16Q-STWNR16	22	16	180	31	14.8	12	17°	TN□□1604□□	M3.5×13.5T	T15
S20R-STWNL16	S20R-STWNR16	26	20	200	30	18.6	14	15°			
S25S-STWNL16	S25S-STWNR16	31	25	250	30	23	17	12°			

内孔车刀螺钉式
SCREW TYPE INTERAL TURNING TOOL

STLN□

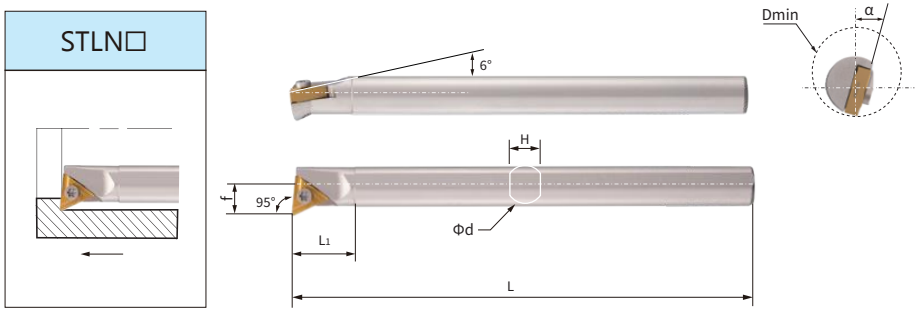

型号Model		尺寸Size (mm)							刀片 Blade	螺丝 Screw	扳手Wrench
左刀 Left	右刀 Right	Φ Dmin	Φd	L	L1	H	f	α°			
S16Q-STLNL16	S16Q-STLNR16	21	16	180	26	14.8	11.5	15°	TN□□1604□□	M3.5×13.5T	T15
S18Q-STLNL16	S18Q-STLNR16	23	18	180	28	16.6	12.5	15°			
S20R-STLNL16	S20R-STLNR16	25	20	200	28	18.6	13.5	15°			

SVJ□R/L

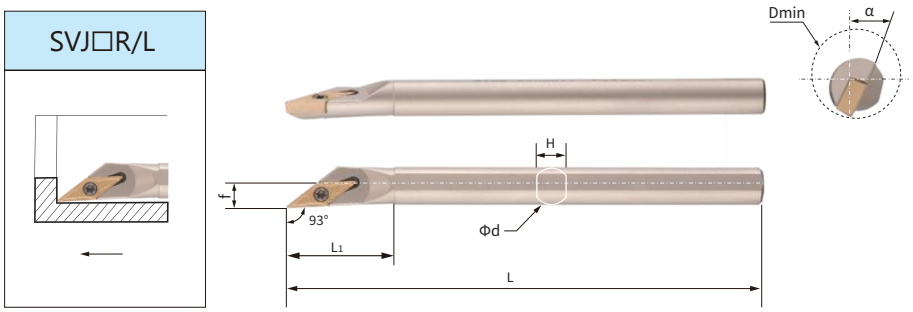

型号Model		尺寸Size (mm)								刀片 Blade	螺丝 Screw	扳手Wrench
左刀 Left	右刀 Right	Φ Dmin	Φd	L	L1	H	f	α° B	α° C			
S08K-SVJ□L11	S08K-SVJ□R11	11	8	125	20	7	5	14°		VC□□1103□□ VB□□1103□□	M2.5×6	T8
S10K-SVJ□L11	S10K-SVJ□R11	13	10	125	25	9	6	12°				
S12M-SVJ□L11	S12M-SVJ□R11	15	12	150	28	11	7	10°				
S14N-SVJ□L11	S14N-SVJ□R11	17	14	160	35	13	8	6°				
S16Q-SVJ□L11	S16Q-SVJ□R11	19	16	180	40	14.8	9	6°				
S18Q-SVJ□L11	S18Q-SVJ□R11	21.5	18	180	40	16.6	10.5	6°				
S20R-SVJ□L11	S20R-SVJ□R11	23.5	20	200	45	18.6	11.5	6°				
S25S-SVJ□L11	S25S-SVJ□R11	28.5	25	250	50	23	14	4°				
S16Q-SVJ□L16	S16Q-SVJ□R16	19.5	16	180	40	14.8	9.5	6°		VC□□1604□□ VB□□1604□□	M3.5×9	T15
S20R-SVJ□L16	S20R-SVJ□R16	23.5	20	200	50	18.6	11.5	6°			M4×10	
S25S-SVJ□L16	S25S-SVJ□R16	29	25	250	50	23	14.5	4°				
S32T-SVJ□L16	S32T-SVJ□R16	38	32	300	60	30	20	2°				
S40T-SVJ□L16	S40T-SVJ□R16	46	40	300	60	37	24	2°				

内孔车刀螺钉式
SCREW TYPE INTERAL TURNING TOOL

SVQ□R/L

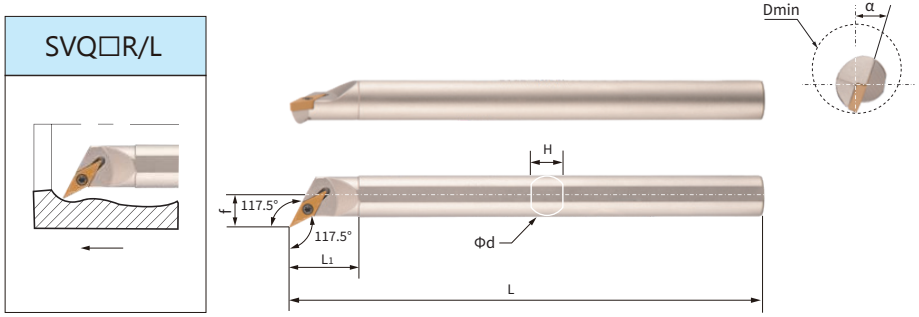

型号Model		尺寸Size (mm)							刀片 Blade	螺丝 Screw	扳手Wrench
左刀 Left	右刀 Right	Φ Dmin	Φd	L	L1	H	f	α° B C			
S16Q-SVQ□L11	S16Q-SVQ□R11	22	16	180	34	14.8	11.5	8°	VC□□1103□□ VB□□1103□□	M2.5×6	T8
S20R-SVQ□L11	S20R-SVQ□R11	26	20	200	38	18.6	14	6°			
S25S-SVQ□L11	S25S-SVQ□R11	31	25	250	50	23	16	4°			
S20R-SVQ□L16	S20R-SVQ□R16	26	20	200	50	18.6	14	8°	VC□□1604□□ VB□□1604□□	M4×10	T15
S25S-SVQ□L16	S25S-SVQ□R16	32	25	250	50	23	17	6°			
S32T-SVQ□L16	S32T-SVQ□R16	39	32	300	50	30	21	4°			
S40T-SVQ□L16	S40T-SVQ□R16	48	40	300	60	37	26	4°			

SVU□R/L

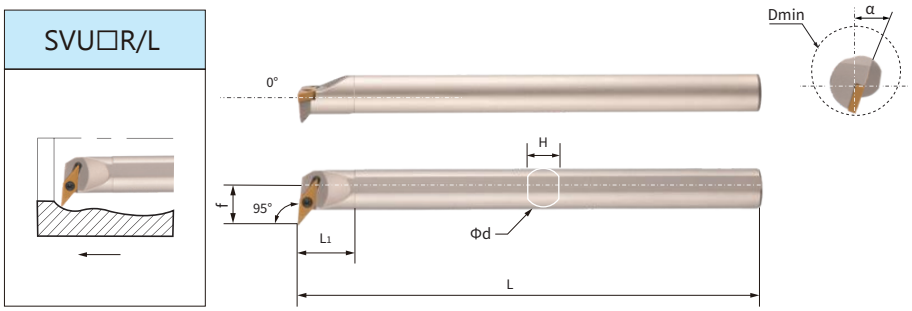

型号Model		尺寸Size (mm)							刀片 Blade	螺丝 Screw	扳手Wrench
左刀 Left	右刀 Right	Φ Dmin	Φd	L	L1	H	f	α° B C			
S16Q-SVU□L11	S16Q-SVU□R11	24	16	180	34	14.8	14	8°	VC□□1103□□ VB□□1103□□	M2.5×6	T8
S18Q-SVU□L11	S18Q-SVU□R11	25	18	180	38	16.6	14	6°			
S20R-SVU□L11	S20R-SVU□R11	26	20	200	50	18.6	14	6°			
S25S-SVU□L11	S25S-SVU□R11	32	25	250	50	23	17	6°			
S16Q-SVU□L16	S16Q-SVU□R16	31	16	180	35	14.8	21	8°	VC□□1604□□ VB□□1604□□	M4×10	T15
S20R-SVU□L16	S20R-SVU□R16	31	20	200	50	18.6	19	8°			
S25S-SVU□L16	S25S-SVU□R16	35	25	250	50	23	20	6°			
S32T-SVU□L16	S32T-SVU□R16	41	32	300	50	30	23	4°			
S40T-SVU□L16	S40T-SVU□R16	48	40	300	55	37	26	4°			
S50V-SVU□L16	S50V-SVU□R16	59	50	400	65	47	32	2°			

B
内孔车刀

SVW□R/L

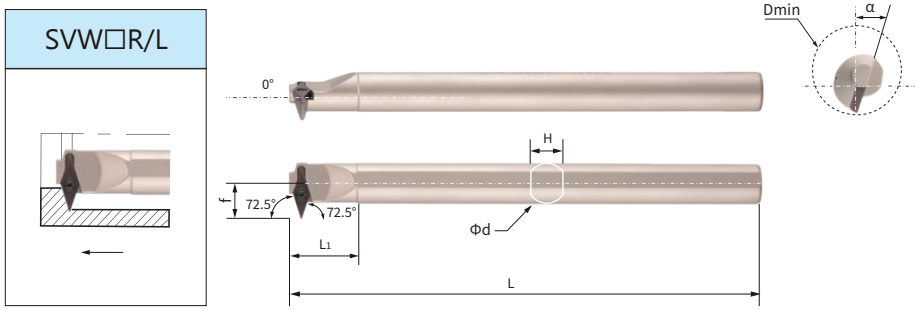

型号Model		尺寸Size (mm)							刀片 Blade	螺丝 Screw	扳手Wrench
左刀 Left	右刀 Right	Φ Dmin	Φd	L	L1	H	f	α° B C			
S16Q-SVW□L11	S16Q-SVW□R11	24	16	180	21	14.8	14	8°	VC□□1103□□ VB□□1103□□	M2.5×6	T8
S20R-SVW□L11	S20R-SVW□R11	28	20	200	38	18.6	16	8°			
S25S-SVW□L11	S25S-SVW□R11	35	25	250	33	23	20	6°			
S20R-SVW□L16	S20R-SVW□R16	33	20	200	33	18.6	21	8°	VC□□1604□□ VB□□1604□□	M4×10	T15
S25S-SVW□L16	S25S-SVW□R16	37	25	250	38	23	22	6°			
S32T-SVW□L16	S32T-SVW□R16	43	32	300	41	30	24.5	4°			

SVX□R/L

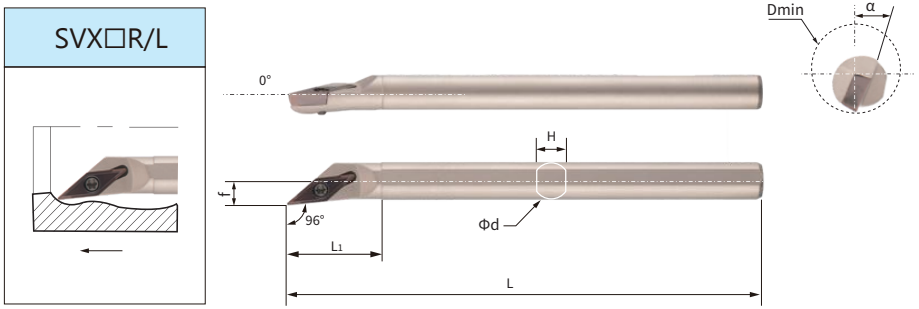

型号Model		尺寸Size (mm)							刀片 Blade	螺丝 Screw	扳手Wrench
左刀 Left	右刀 Right	Φ Dmin	Φd	L	L1	H	f	α° B C			
S08K-SVX□L11	S08K-SVX□R11	11.5	8	125	22	7	5.5	14°	VC□□1103□□ VB□□1103□□	M2.5×6	T8
S10K-SVX□L11	S10K-SVX□R11	13.5	10	125	25	9	6.5	12°			
S12M-SVX□L11	S12M-SVX□R11	15	12	150	28	11	7	8°			
S14N-SVX□L11	S14N-SVX□R11	17.5	14	160	40	13	8.5	6°			
S16Q-SVX□L11	S16Q-SVX□R11	19.5	16	180	40	14.8	9.5	6°			
S20R-SVX□L11	S20R-SVX□R11	24	20	200	45	18.6	12	6°			
S25S-SVX□L11	S25S-SVX□R11	29	25	250	45	23	14.5	4°			
S16Q-SVX□L16	S16Q-SVX□R16	19.5	16	180	40	14.8	9.5	6°	VC□□1604□□ VB□□1604□□	M3.5×9	T15
S20R-SVX□L16	S20R-SVX□R16	24	20	200	40	18.6	12	6°		M4×10	
S25S-SVX□L16	S25S-SVX□R16	29	25	250	45	23	14.5	4°			
S32T-SVX□L16	S32T-SVX□R16	38	32	300	50	30	20	2°			
S40T-SVX□L16	S40T-SVX□R16	46	40	300	55	37	24	2°			

SVZ□R/L

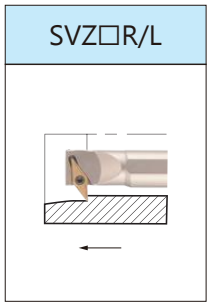

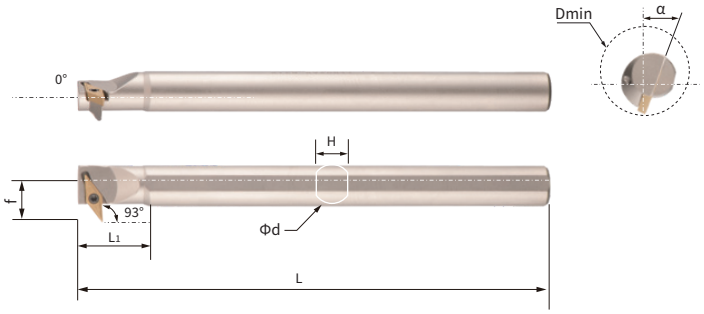

型号Model		尺寸Size (mm)							刀片 Blade	螺丝 Screw	扳手Wrench
左刀 Left	右刀 Right	Φ Dmin	Φd	L	L1	H	f	α° B C			
S16Q-SVZ□L11	S16Q-SVZ□R11	24	16	180	34	14.8	14	8°	VC□□1103□□ VB□□1103□□	M2.5×6	T8
S20R-SVZ□L11	S20R-SVZ□R11	26	20	200	38	18.6	14	6°			
S25S-SVZ□L16	S25S-SVZ□R16	35	25	250	50	23	20	6°	VC□□1604□□ VB□□1604□□	M4×10	T15
S32T-SVZ□L16	S32T-SVZ□R16	42	32	300	50	30	24	4°			
S40T-SVZ□L16	S40T-SVZ□R16	49	40	300	60	37	27	4°			

SWLN□

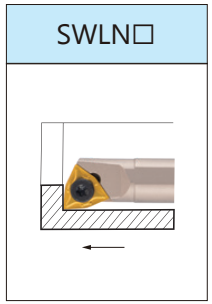

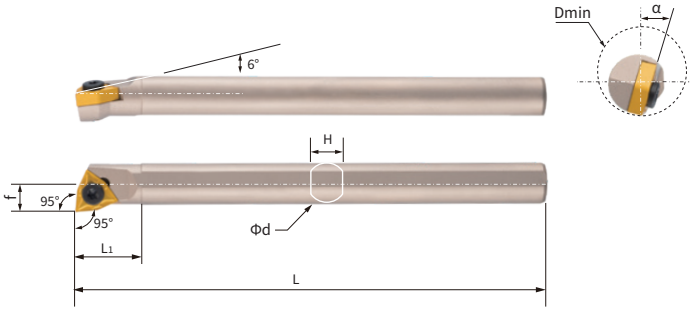

型号Model		尺寸Size (mm)							刀片 Blade	螺丝 Screw	扳手Wrench
左刀 Left	右刀 Right	Φ Dmin	Φd	L	L1	H	f	α°			
S16Q-SWLNL06	S16Q-SWLNR06	19.5	16	180	25	14.8	10.5	16°	WN□□0604□□	M3.5×13.5T	T15
S20R-SWLNL06	S20R-SWLNR06	23	20	200	28	18.6	12	15°			
S16Q-SWLNL08	S16Q-SWLNR08	20	16	180	31	14.8	10.5	17°	WN□□0804□□	M4.5×14W	T20
S20R-SWLNL08	S20R-SWLNR08	25	20	200	30	18.6	12	15°			
S25S-SWLNL08	S25S-SWLNR08	29	25	250	30	23	14.5	12°			

内孔车刀螺钉式
SCREW TYPE INTERAL TURNING TOOL

B
内孔车刀

SWLC□

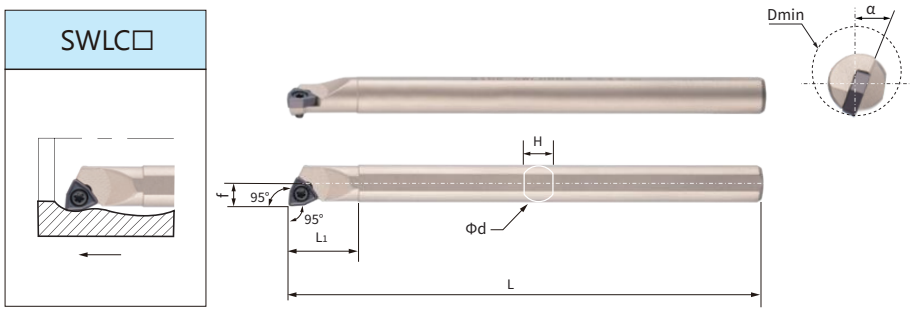

型号Model		尺寸Size (mm)							刀片 Blade	螺丝 Screw	扳手Wrench
左刀 Left	右刀 Right	Φ Dmin	Φd	L	L1	H	f	α°			
S08K-SWLCL04	S08K-SWLCR04	11	8	125	25	7	5	12°	WC□□0402□□	M2.5×6	T8
S10K-SWLCL04	S10K-SWLCR04	13	10	125	30	9	6	10°			
S12M-SWLCL04	S12M-SWLCR04	15	12	150	37	11	7	8°			
S16Q-SWLCL04	S16Q-SWLCR04	19	16	180	40	14.8	9	6°			
S10K-SWLCL05	S10K-SWLCR05	13	10	125	30	9	6	12°	WC□□0503□□	M3×6	
S12M-SWLCL05	S12M-SWLCR05	15	12	150	37	11	7	8°		M3×8	
S16Q-SWLCL05	S16Q-SWLCR05	19	16	180	40	14.8	9	6°			
S16Q-SWLCL06	S16Q-SWLCR06	20	16	180	40	14.8	10.5	9°	WC□□06T3□□	M3.5×9	T15
S20R-SWLCL06	S20R-SWLCR06	23	20	200	40	18.6	11.5	6°			
S25S-SWLCL06	S25S-SWLCR06	29	25	250	40	23	14	4°			
S25S-SWLCL08	S25S-SWLCR08	31	25	250	40	23	16	4°	WC□□0804□□	M4×10	

SWUB□

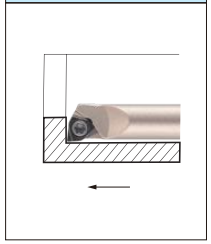

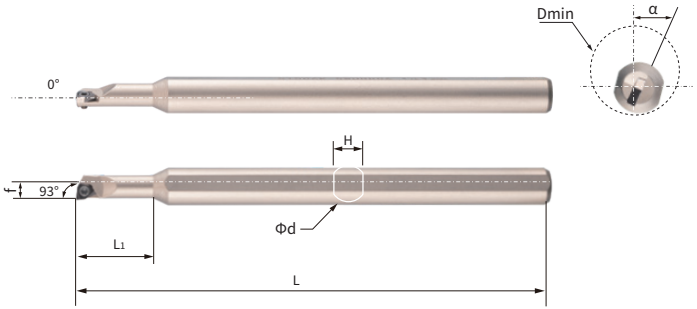

型号Model		尺寸Size (mm)							刀片 Blade	螺丝 Screw	扳手Wrench
左刀 Left	右刀 Right	Φ Dmin	Φd	L	L1	H	f	α°			
S0805K-SWUBL06	S0805K-SWUBR06	7	8	125	16	7	3	17°	WBGT060102	M2×4	T6
S0806K-SWUBL06	S0806K-SWUBR06	8	8	125	20	7	3.5	15°			
S1005K-SWUBL06	S1005K-SWUBR06	7	10	125	16	9	3	17°			
S1006K-SWUBL06	S1006K-SWUBR06	8	10	125	20	9	3.5	15°			
S1205K-SWUBL06	S1205K-SWUBR06	7	12	125	16	11	3	17°			
S1206K-SWUBL06	S1206K-SWUBR06	8	12	125	20	11	3.5	15°			
S1207K-SWUBL06	S1207K-SWUBR06	9	12	125	20	11	4	15°			
S1605K-SWUBL06	S1605K-SWUBR06	7	16	125	18	14.8	3	17°			
S1606K-SWUBL06	S1606K-SWUBR06	8	16	125	20	14.8	3.5	15°			
S1607K-SWUBL06	S1607K-SWUBR06	9	16	125	20	14.8	4	15°			

螺纹车刀
THREADING TURNING TOOL

螺纹车刀型号编制说明

螺纹形式	
N	内螺纹
E	外螺纹

刀尖高度
单位：mm 圆刀杆用00表示

刀具长度	
H	100
K	125
M	150
P	170
Q	180

备注	
T	有补偿
L	无补偿

S	E	R	25	25	M	16	

压紧方式	
C	上压式
S	螺钉压紧式

切削方向	
R	右切
E	左切

刀体宽度
单位：mm 圆刀杆用直径表示

刀片尺寸		
代号	三角形边长	内切圆
11	11	6.35
16	16	9.525
22	22	12.70

螺纹刀片型号编制说明

螺纹形式	
N	内螺纹
E	外螺纹

切削方向	
R	右切
L	左切

16	N	R	1.75	ISO

刀片尺寸		
代号	三角形边长	内切圆
11	11	6.35
16	16	9.525
22	22	12.70

螺距代号
1、公制：螺距 例：0.75=0.75mm螺距 2、英制：扣/inch 例：8=8扣/inch 3、AG60: 60°泛螺距

螺纹标准代号
ISO=ISO米制螺纹 W=惠式螺纹

CTT□

外径螺纹车刀

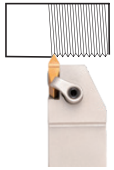

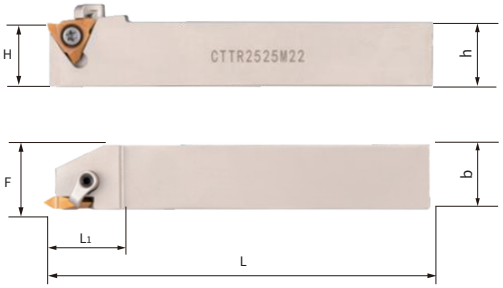

型号Model		尺寸Size (mm)						刀片 Blade	螺丝 Screw	扳手 Wrench	压板 Platen	双头螺栓 Double Screw	扳手 Wrench
左刀Left	右刀Right	h	b	L	L_1	H	F						
CTTL1010H16	CTTR1010H16	10	10	100	20	10	10	TT32ER/L□□	M4×10	T15	×	×	×
CTTL1212H16	CTTR1212H16	12	12	100	20	12	12						
CTTL1616H16	CTTR1616H16	16	16	100	20	16	16				HL1511	ML0520	L2.5
CTTL2020K16	CTTR2020K16	20	20	125	22	20	20						
CTTL2020K22	CTTR2020K22	20	20	125	28	20	20	TT43ER/L□□	M5×12	T20	HL1511	ML0520	L2.5
CTTL2525M22	CTTR2525M22	25	25	150	30	25	25						
CTTL3232P22	CTTR3232P22	32	32	170	32	32	32						

KTT□

外径螺纹车刀

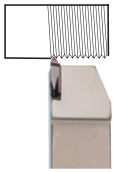

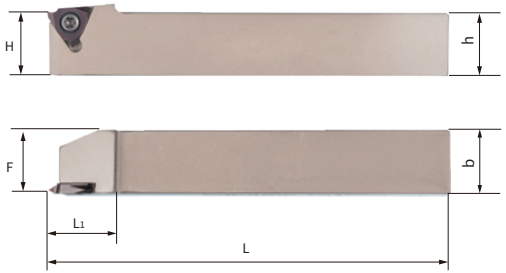

型号Model		尺寸Size (mm)						刀片 Blade	螺丝 Screw	扳手Wrench
左刀 Left	右刀 Right	h	b	L	L1	H	F			
KTTXL1010H16	KTTXR1010H16	10	10	100	20	10	10	TT32ER/L□□	M4×10	T15
KTTXL1212H16	KTTXR1212H16	12	12	100	20	12	12			
KTTXL1616H16	KTTXR1616H16	16	16	100	20	16	16			
KTTXL2020K16	KTTXR2020K16	20	20	125	22	20	20			
KTTXL2020K22	KTTXR2020K22	20	20	125	22	20	20	TT43ER/L□□	M5×12	T20
KTTXL2525M22	KTTXR2525M22	25	25	150	30	25	25			
KTTXL3232P22	KTTXR3232P22	32	32	170	30	32	32			

CE□

外径螺纹车刀

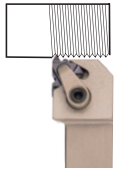

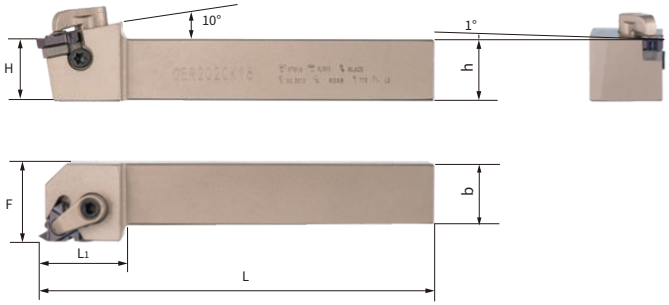

型号Model		尺寸Size (mm)						刀片 Blade	刀垫 Shim	螺丝 Screw	侧钉 Screw	扳手 Wrench	压板 Platen	双头螺栓 Double Screw	扳手 Wrench
左刀Left	右刀Right	h	b	L	L1	H	F								
CEL1616H16	CER1616H16	16	16	100	20	16	20	16ER/L□□	MTM16	M3.5×12	M3×8C	T15	HL1813	ML0625	L3
CEL2020K16	CER2020K16	20	20	125	22	20	25								
CEL2525M16	CER2525M16	25	25	150	22	25	32								
CEL3232P16	CER3232P16	32	32	170	25	32	40								
CEL2525M22	CER2525M22	25	25	150	26	25	32	22ER/L□□	MTM22R/L	M4×16		T15	HL1813	ML0625	L3
CEL3232P22	CER3232P22	32	32	170	28	32	40								

SE□

外径螺纹车刀

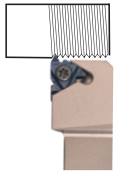

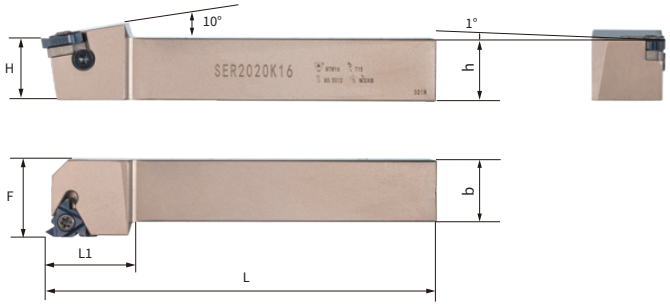

型号Model		尺寸Size (mm)						刀片 Blade	刀垫 Shim	螺丝 Screw	扳手 Wrench	侧钉 Screw	扳手 Wrench
左刀Left	右刀Right	h	b	L	L_1	H	F						
SEL1010H11	SER1010H11	10	10	100	16	10	12	11ER/L□□	×	M2.5X6	T8	×	×
SEL1212H11	SER1212H11	12	12	100	16	12	16						
SEL1212H16	SER1212H16	12	12	100	16	12	16	16ER/L□□	×	M3.5X9	T15	×	×
SEL1616H16	SER1616H16	16	16	100	20	16	20		MTM16	M3.5×12	T15	M3×8C	T15
SEL2020K16	SER2020K16	20	20	125	22	20	25						
SEL2525M16	SER2525M16	25	25	150	22	25	32						
SEL3232P16	SER3232P16	32	32	170	25	32	40						
SEL2020K22	SER2020K22	20	20	125	22	20	25	22ER/L□□	MTM22R/L	M4×16	T15	M3×8C	T15
SEL2525M22	SER2525M22	25	25	150	22	25	32						
SEL3232P22	SER3232P22	32	32	170	25	32	40						
SEL2525M27	SER2525M27	25	25	150	22	25	32	27ER/L□□	MTM27R/L	M6×18	T25	M3×8C	T15
SEL3232P27	SER3232P27	32	32	170	25	32	40						

B-SE□

外径螺纹车刀

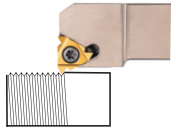

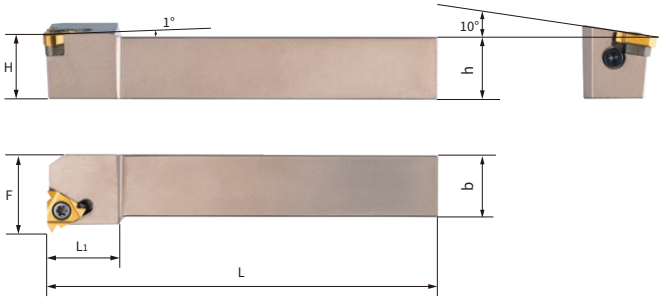

型号Model		尺寸Size (mm)						刀片 Blade	刀垫 Shim	螺丝 Screw	扳手 Wrench	侧钉 Screw	扳手 Wrench
左刀Left	右刀Right	h	b	H	F	L	L_1						
SEL1212H11-B	SER1212H11-B	12	12	12	16	100	16	11ER/L□□	×	M2.5×8	T8	×	×
SEL1616H11-B	SER1616H11-B	16	16	16	20	100	19						
SEL1212H16-B	SER1212H16-B	12	12	12	16	100	20	16ER/L□□	×	M3.5×12	T15	×	×
SEL1616H16-B	SER1616H16-B	16	16	16	20	100	22		MTM16	M3.5×12	T15	M3×8C	T15
SEL2020K16-B	SER2020K16-B	20	20	20	25	125	25						
SEL2525M16-B	SER2525M16-B	25	25	25	32	150	26						
SEL2020K22-B	SER2020K22-B	20	20	20	25	125	24	22ER/L□□	MTM22R/L	M4×16	T15	M3×8C	T15

螺纹车刀
THREADING TURNING TOOL

SN□

内径螺纹车刀

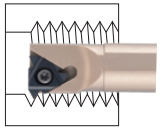

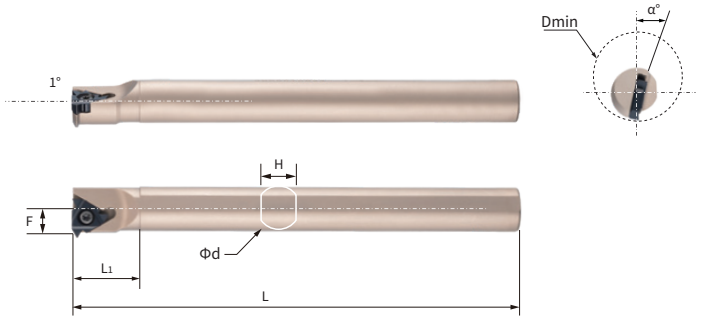

型号Model		尺寸Size (mm)							刀片 Blade	刀垫 Shim	螺丝 Screw	扳手 Wrench	侧钉 Screw	扳手 Wrench
左刀Left	右刀Right	Φ Dmin	Φd	L	L₁	H	F	α°						
SNL0005H06	SNR0005H06	7	5	100	15	4.7	3.6	18°	06NR/L□□	×	M2×4	T6	×	×
SNL0006J06	SNR0006J06	7.5	6	110	15	5.2	4							
SNL0007K08	SNR0007K08	8.5	7	125	15	6	4.5	15°	08NR/L□□	×	M2.5×6	T8		
SNL0008K08	SNR0008K08	9.5	8	125	15	7	5							
SNL0008K11	SNR0008K11	10	8	125	15	7	5.5		11NR/L□□	×	M2.5×6	T8	×	×
SNL0010K11	SNR0010K11	12	10	125	16	9	6.2							
SNL0012M11	SNR0012M11	14	12	150	18	11	7.4							
SNL0013M11	SNR0013M11	15	13	150	18	12	8							
SNL0013M16	SNR0013M16	15.5	13	150	20	12	8		16NR/L□□	×	M3.5×9	T15	×	×
SNL0014N16	SNR0014N16	16.5	14	160	25	13	8.5							
SNL0016Q16	SNR0016Q16	19	16	180	25	14.8	10							
SNL0020R16	SNR0020R16	23	20	200	28	18.4	12			STM1603	M3.5×12			
SNL0025S16	SNR0025S16	29	25	250	32	23	15							
SNL0032T16	SNR0032T16	36	32	300	38	30	18.5							
SNL0040T16	SNR0040T16	44	40	300	42	37	23							
SNL0050U16	SNR0050U16	56	50	350	50	47	30							
SNL0020R22	SNR0020R22	25	20	200	30	18.4	13.5		22NR/L□□	×	M4×10	T15	×	×
SNL0025S22	SNR0025S22	30	25	250	32	23	16			MTM22R/L	M4×16	T15	M3×8C	T15
SNL0032T22	SNR0032T22	38	32	300	38	30	20							
SNL0040T22	SNR0040T22	46	40	300	42	37	25							
SNL0050U22	SNR0050U22	58	50	350	50	47	32							
SNL0032T27	SNR0032T27	39	32	300	38	30	21.5	15°	27NR/L□□	MTM27R/L	M6×18	T25	M3×8C	T15

SNR□

内径螺纹车刀

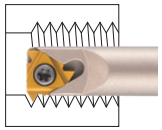

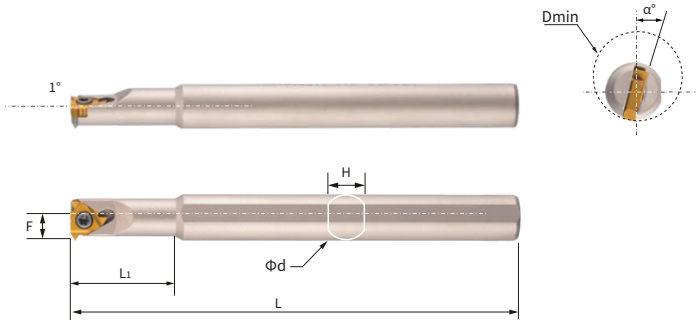

型号Model		尺寸Size (mm)							刀片 Blade	螺丝 Screw	扳手Wrench
左刀 Left	右刀 Right	Φ Dmin	Φd	L	L₁	H	f	α°			
SNL0006K06-A12	SNR0006K06-A12	8	12	125	20	11	4	15°	06NR/L□□	M2×4	T6
SNL0006K06-A16	SNR0006K06-A16	8	16	125	20	14.8	4				
SNL0007K08-A16	SNR0007K08-A16	9	16	125	25	14.8	4.5		08NR/L□□	M2.5×6	T8
SNL0008K08-A12	SNR0008K08-A12	10	12	125	25	11	5				
SNL0008K08-A16	SNR0008K08-A16	10	16	125	25	14.8	5				
SNL0008K11-A12	SNR0008K11-A12	10	12	125	25	11	5.5		11NR/L□□	M2.5×6	T8
SNL0008K11-A16	SNR0008K11-A16	10	16	125	25	14.8	5.5				
SNL0010K11-A16	SNR0010K11-A16	12	16	125	25	14.8	6.2				
SNL0012M11-A16	SNR0012M11-A16	14	16	150	32	14.8	7.4				
SNL0013M16-A16	SNR0013M16-A16	15	16	150	32	14.8	8		16NR/L□□	M3.5×9	T15

切槽(断)刀
GROOVING TOOL

SGB□

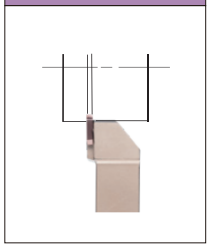

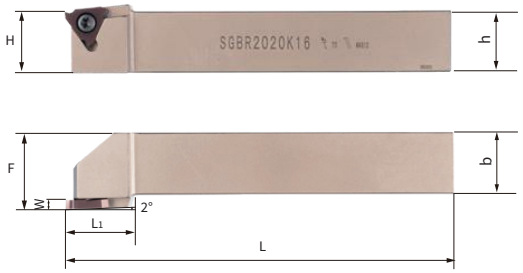

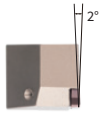

型号Model		尺寸Size (mm)							刀片 Blade	螺丝 Screw	扳手Wrench
左刀 Left	右刀 Right	W	h	b	L	L_1	H	F			
SGBL1212H16	SGBR1212H16	0.33-2.5	12	12	100	21	12	16	TGF32R/L	M4×10	T15
SGBL1616H16	SGBR1616H16	0.33-2.5	16	16	100	21	16	20			
SGBL2020K16	SGBR2020K16	0.33-2.5	20	20	125	21	20	25			
SGBL2525M16	SGBR2525M16	0.33-2.5	25	25	150	26	25	32			
SGBL3232P16	SGBR3232P16	0.33-2.5	32	32	170	32	32	40			
SGBL2020K22	SGBR2020K22	1.25-1.85	20	20	125	28	20	25	TGF43R/L	M5×12	T20
SGBL2525M22	SGBR2525M22	1.25-1.85	25	25	150	30	25	32			
SGBL3232P22	SGBR3232P22	1.25-1.85	32	32	170	32	32	40			

CGB□

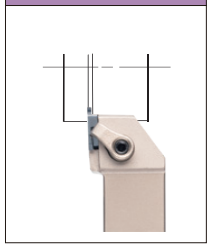

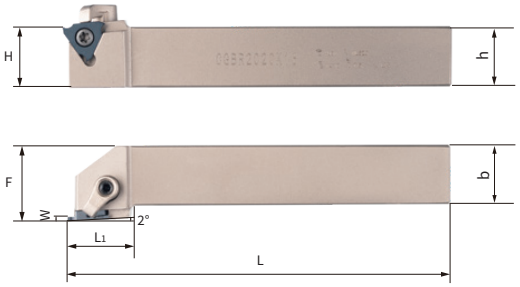

型号Model		尺寸Size (mm)							刀片 Blade	压板 Platen	双头螺栓 Double Screw	扳手 Wrench	螺丝 Screw	扳手 Wrench
左刀 Left	右刀 Right	W	h	b	L	L1	H	F						
CGBL1616H16	CGBR1616H16	0.5-0.25	16	16	100	21	16	20	TGF32R/L	HL1511	ML0520	L2.5	M4×10	T15
CGBL2020K16	CGBR2020K16	0.5-0.25	20	20	125	21	20	25						
CGBL2525M16	CGBR2525M16	0.5-0.25	25	25	150	26	25	32						
CGBL3232P16	CGBR3232P16	0.5-0.25	32	32	170	32	32	40						
CGBL2020K22	CGBR2020K22	1.25-1.85	20	20	125	28	20	25	TGF43R/L	HL1511	ML0520	L2.5	M5×12	T20
CGBL2525M22	CGBR2525M22	1.25-1.85	25	25	150	30	25	32						
CGBL3232P22	CGBR3232P22	1.25-1.85	32	32	170	32	32	40						

MGEV□

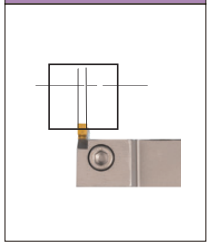

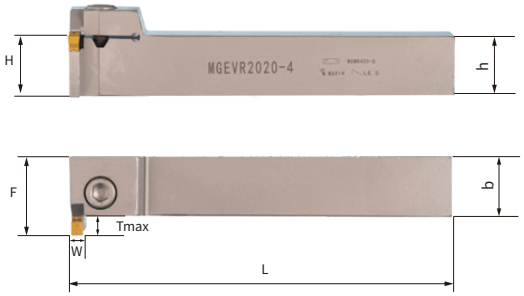

型号Model		尺寸Size (mm)							刀片 Blade	螺丝 Screw	扳手Wrench
左刀 Left	右刀 Right	W	h	b	L	H	F	Tmax			
MGEVL1616-1.5	MGEVR1616-1.5	1.5	16	16	100	16	22	6	MGMN150	M6X14	L5
MGEVL2020-1.5	MGEVR2020-1.5	1.5	20	20	125	20	26.5	6		M6X14	

型号Model		尺寸Size (mm)							刀片 Blade	螺丝 Screw	扳手Wrench
左刀 Left	右刀 Right	W	h	b	L	H	F	Tmax			
MGEVL2525-1.5	MGEVR2525-1.5	1.5	25	25	150	25	32.5	7	MGMN150	M6X16	L5
MGEVL1616-2	MGEVR1616-2	2	16	16	100	16	22	6	MGMN200	M6X14	
MGEVL2020-2	MGEVR2020-2	2	20	20	125	20	26.5	6		M6X14	
MGEVL2525-2	MGEVR2525-2	2	25	25	150	25	32.5	7		M6X16	
MGEVL1616-2.5	MGEVR1616-2.5	2.5	16	16	100	16	22	6	MGMN250	M6X14	
MGEVL2020-2.5	MGEVR2020-2.5	2.5	20	20	125	20	26.5	6		M6X14	
MGEVL2525-2.5	MGEVR2525-2.5	2.5	25	25	150	25	32.5	7		M6X16	
MGEVL1616-3	MGEVR1616-3	3	16	16	100	16	24	7.5	MGMN300	M6X14	
MGEVL2020-3	MGEVR2020-3	3	20	20	125	20	26.5	6		M6X14	
MGEVL2525-3	MGEVR2525-3	3	25	25	150	25	32.5	7		M6X16	
MGEVL1616-4	MGEVR1616-4	4	16	16	100	16	24	7.5	MGMN400	M6X14	
MGEVL2020-4	MGEVR2020-4	4	20	20	125	20	26.5	6		M6X14	
MGEVL2525-4	MGEVR2525-4	4	25	25	150	25	32.5	7		M6X16	
MGEVL2020-5	MGEVR2020-5	5	20	20	125	20	30	9.5	MGMN500	M6X14	
MGEVL2525-5	MGEVR2525-5	5	25	25	150	25	32.5	7		M6X16	
MGEVL2020-6	MGEVR2020-6	6	20	20	125	20	30	9.5	MGMN600	M6X14	
MGEVL2525-6	MGEVR2525-6	6	25	25	150	25	32.5	7		M6X16	
MGEVL2020-1.5 T12	MGEVR2020-1.5 T12	1.5	20	20	125	20	32	12	MGMN150	M6X14	L5
MGEVL2020-2 T12	MGEVR2020-2 T12	2							MGMN200		
MGEVL2020-2.5 T12	MGEVR2020-2.5 T12	2.5							MGMN250		
MGEVL2020-3 T12	MGEVR2020-3 T12	3							MGMN300		
MGEVL2020-4 T12	MGEVR2020-4 T12	4							MGMN400		
MGEVL2525-1.5 T15	MGEVR2525-1.5 T15	1.5	25	25	150	25	40	15	MGMN150	M6X16	
MGEVL2525-2 T15	MGEVR2525-2 T15	2							MGMN200		
MGEVL2525-2.5 T15	MGEVR2525-2.5 T15	2.5							MGMN250		
MGEVL2525-3 T15	MGEVR2525-3 T15	3							MGMN300		
MGEVL2525-4 T15	MGEVR2525-4 T15	4							MGMN400		
MGEVL2525-5 T15	MGEVR2525-5 T15	5							MGMN500		
MGEVL2525-6 T15	MGEVR2525-6 T15	6							MGMN600		

CTGFS□

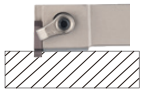

型号Model		尺寸Size (mm)						刀片 Blade	压板 Platen	双头螺栓 Double Screw	扳手 Wrench	螺丝 Screw	扳手 Wrench
左刀 Left	右刀 Right	W	h	b	L	H	F						
CTGFSL1616H16	CTGFSR1616H16	0.4-0.45	16	16	100	16	20	TGF32R/L	HL1511	ML0520	L2.5	M3.5×9	T15
CTGFSL2020K16	CTGFSR2020K16		20	20	125	20	25						
CTGFSL2525M16	CTGFSR2525M16		25	25	150	25	32						
CTGFSL2020K22	CTGFSR2020K22		20	20	125	20	25	TGF43R/L	HL1511	ML0520	L2.5	M5×12	T20
CTGFSL2525M22	CTGFSR2525M22		25	25	150	25	31						

KTGFS□

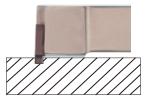

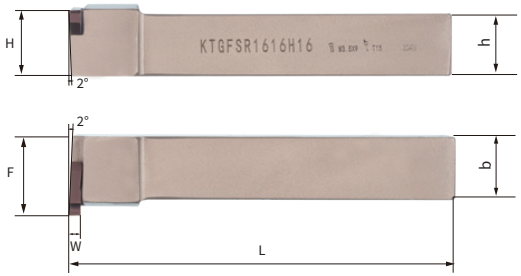

型号Model		尺寸Size (mm)						刀片 Blade	螺丝 Screw	扳手Wrench
左刀 Left	右刀 Right	W	h	b	L	H	F			
KTGFSL1212H16	KTGFSR1212H16	0.4-0.45	12	12	100	12	16	TGF32R/L	M3.5×9	T15
KTGFSL1616H16	KTGFSR1616H16		16	16	100	16	20			
KTGFSL2020K16	KTGFSR2020K16		20	20	125	20	25			
KTGFSL2525M16	KTGFSR2525M16		25	25	150	25	32			
KTGFSL2020K22	KTGFSR2020K22		20	20	125	20	25	TGF43R/L	M5×12	T20
KTGFSL2525M22	KTGFSR2525M22		25	25	150	25	31			

TTE□

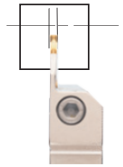

型号Model		尺寸Size (mm)							刀片 Blade	螺丝 Screw	扳手Wrench
左刀 Left	右刀 Right	W	h	b	L	H	F	Tmax			
TTEL1212-2	TTER1212-2	2	12	12	100	12	12.3	17	TDC2	M5×12	L4
TTEL1212-3	TTER1212-3	3	12	12	100	12	12.4	20	TDC3		
TTEL1212-4	TTER1212-4	4	12	12	100	12	12.5	20	TDC4		
TTEL1616-2	TTER1616-2	2	16	16	100	16	16.3	17	TDC2	M6×14	L5
TTEL1616-3	TTER1616-3	3	16	16	100	16	16.4	20	TDC3		
TTEL1616-4	TTER1616-4	4	16	16	100	16	16.5	20	TDC4		
TTEL2020-2	TTER2020-2	2	20	20	125	20	20.3	17	TDC2	M6×14	
TTEL2020-3	TTER2020-3	3	20	20	125	20	20.4	20	TDC3		
TTEL2020-4	TTER2020-4	4	20	20	125	20	20.5	20	TDC4		
TTEL2525-2	TTER2525-2	2	25	25	150	25	25.3	17	TDC2	M6×16	
TTEL2525-3	TTER2525-3	3	25	25	150	25	25.4	20	TDC3		
TTEL2525-4	TTER2525-4	4	25	25	150	25	25.5	20	TDC4		

切槽(断)刀
GROOVING CUTTER

KGM□

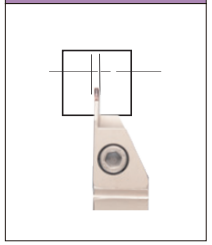

型号Model		尺寸Size (mm)							刀片 Blade	螺丝 Screw	扳手Wrench
左刀 Left	右刀 Right	W	h	b	L	H	F	Tmax			
KGML1212-1.5	KGMR1212-1.5	1.5	12	12	125	12	12.15	14	GMN1520-MT	M4×12	T15
KGML1212-2	KGMR1212-2	2	12	12	125	12	12.2	14	GMN2020-MT		
KGML1212-2.5	KGMR1212-2.5	2.5	12	12	125	12	12.25	16	GMN2520-MT		
KGML1212-3	KGMR1212-3	3	12	12	125	12	12.35	16	GMN3020-MT		
KGML1212-4	KGMR1212-4	4	12	12	125	12	12.4	16	GMN4020-MT		
KGML1616-1.5	KGMR1616-1.5	1.5	16	16	100	16	16.15	17	GMN1520-MT	M6×14	L5
KGML1616-2	KGMR1616-2	2	16	16	100	16	16.2	17	GMN2020-MT		
KGML1616-2.5	KGMR1616-2.5	2.5	16	16	100	16	16.25	17	GMN2520-MT		
KGML1616-3	KGMR1616-3	3	16	16	100	16	16.35	18	GMN3020-MT		
KGML1616-4	KGMR1616-4	4	16	16	100	16	16.4	18	GMN4020-MT		
KGML2020-1.5	KGMR2020-1.5	1.5	20	20	125	20	20.15	17	GMN1520-MT	M6×14	L5
KGML2020-2	KGMR2020-2	2	20	20	125	20	20.2	17	GMN2020-MT		
KGML2020-2.5	KGMR2020-2.5	2.5	20	20	125	20	20.25	17	GMN2520-MT		
KGML2020-3	KGMR2020-3	3	20	20	125	20	20.35	20	GMN3020-MT		
KGML2020-4	KGMR2020-4	4	20	20	125	20	20.4	20	GMN4020-MT		
KGML2525-1.5	KGMR2525-1.5	1.5	25	25	150	25	25.15	17	GMN1520-MT	M6×16	L5
KGML2525-2	KGMR2525-2	2	25	25	150	25	25.2	17	GMN2020-MT		
KGML2525-2.5	KGMR2525-2.5	2.5	25	25	150	25	25.25	17	GMN2520-MT		
KGML2525-3	KGMR2525-3	3	25	25	150	25	25.35	20	GMN3020-MT		
KGML2525-4	KGMR2525-4	4	25	25	150	25	25.4	20	GMN4020-MT		

ZQ□

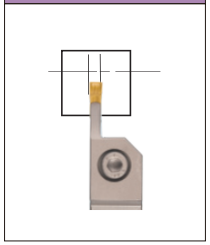

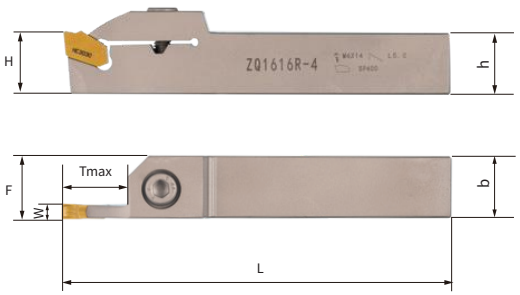

型号Model		尺寸Size (mm)							刀片 Blade	螺丝 Screw	扳手Wrench
左刀 Left	右刀 Right	W	h	b	L	H	F	Tmax			
ZQ1616L-2	ZQ1616R-2	2	16	16	100	16	16.4	16	SP200	M6X14	L5
ZQ2020L-2	ZQ2020R-2	2	20	20	125	20	20.4	18		M6X14	
ZQ2525L-2	ZQ2525R-2	2	25	25	150	25	25.4	20		M6X16	
ZQ1616L-3	ZQ1616R-3	3	16	16	100	16	16.4	18	SP300	M6X14	
ZQ2020L-3	ZQ2020R-3	3	20	20	125	20	20.4	20		M6X14	
ZQ2525L-3	ZQ2525R-3	3	25	25	150	25	25.4	20		M6X16	
ZQ3232L-3	ZQ3232R-3	3	32	32	170	32	32.4	25		M6X16	
ZQ1616L-4	ZQ1616R-4	4	16	16	100	16	16.4	18	SP400	M6X14	
ZQ2020L-4	ZQ2020R-4	4	20	20	125	20	20.4	20		M6X14	
ZQ2525L-4	ZQ2525R-4	4	25	25	150	25	25.4	20		M6X16	
ZQ3232L-4	ZQ3232R-4	4	32	32	170	32	32.4	25		M6X16	
ZQ2020L-5	ZQ2020R-5	5	20	20	125	20	20.4	20	SP500	M6X14	
ZQ2525L-5	ZQ2525R-5	5	25	25	150	25	25.4	25		M6X16	
ZQ3232L-5	ZQ3232R-5	5	32	32	170	32	32.4	25		M6X16	
ZQ2020L-6	ZQ2020R-6	6	20	20	125	20	20.4	20	SP600	M6X14	
ZQ2525L-6	ZQ2525R-6	6	25	25	150	25	25.4	25		M6X16	
ZQ3232L-6	ZQ3232R-6	6	32	32	170	32	32.4	25		M6X16	

D
切槽(断)刀

MGEH□

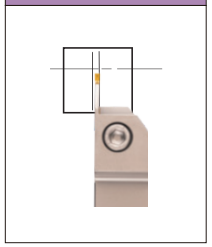

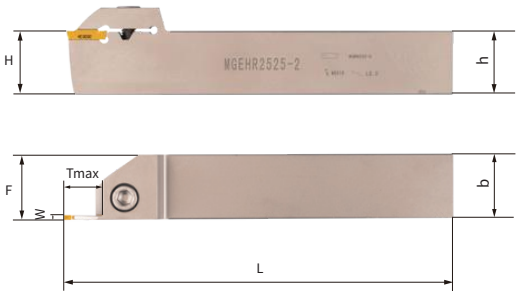

型号Model		尺寸Size (mm)							刀片 Blade	螺丝 Screw	扳手Wrench
左刀 Left	右刀 Right	W	h	b	L	H	F	Tmax			
MGEHL1010-1.5	MGEHR1010-1.5	1.5	10	10	100	10	10	16	MGMN150	M4X14	L3
MGEHL1212-1.5	MGEHR1212-1.5	1.5	12	12	100	12	12	16		M5X12	L4
MGEHL1616-1.5	MGEHR1616-1.5	1.5	16	16	100	16	16	16		M6X14	L5
MGEHL2020-1.5	MGEHR2020-1.5	1.5	20	20	125	20	20	16		M6X14	
MGEHL2525-1.5	MGEHR2525-1.5	1.5	25	25	150	25	25	16		M6X16	
MGEHL3232-1.5	MGEHR3232-1.5	1.5	32	32	170	32	32	14.5		M6X16	
MGEHL1010-2	MGEHR1010-2	2	10	10	100	10	10	16	MGMN200	M4X14	L3
MGEHL1212-2	MGEHR1212-2	2	12	12	100	12	12	17		M5X12	L4
MGEHL1616-2	MGEHR1616-2	2	16	16	100	16	16	17		M6X14	L5
MGEHL2020-2	MGEHR2020-2	2	20	20	125	20	20	17		M6X14	
MGEHL2525-2	MGEHR2525-2	2	25	25	150	25	25	17		M6X16	
MGEHL3232-2	MGEHR3232-2	2	32	32	170	32	32	14.5		M6X16	
MGEHL1010-2.5	MGEHR1010-2.5	2.5	10	10	100	10	10	16	MGMN250	M4X14	L3
MGEHL1212-2.5	MGEHR1212-2.5	2.5	12	12	100	12	12	18		M5X12	L4
MGEHL1616-2.5	MGEHR1616-2.5	2.5	16	16	100	16	16	18		M6X14	L5
MGEHL2020-2.5	MGEHR2020-2.5	2.5	20	20	125	20	20	18		M6X14	
MGEHL2525-2.5	MGEHR2525-2.5	2.5	25	25	150	25	25	18		M6X16	
MGEHL3232-2.5	MGEHR3232-2.5	2.5	32	32	170	32	32	17		M6X16	
MGEHL1010-3	MGEHR1010-3	3	10	10	100	10	10	16	MGMN300	M4X14	L3
MGEHL1212-3	MGEHR1212-3	3	12	12	100	12	12	20		M5X12	L4
MGEHL1616-3	MGEHR1616-3	3	16	16	100	16	16	20		M6X14	L5
MGEHL2020-3	MGEHR2020-3	3	20	20	125	20	20	20		M6X14	
MGEHL2525-3	MGEHR2525-3	3	25	25	150	25	25	20		M6X16	
MGEHL3232-3	MGEHR3232-3	3	32	32	170	32	32	20		M6X16	
MGEHL1010-4	MGEHR1010-4	4	10	10	100	10	10	16	MGMN400	M4X14	L3
MGEHL1212-4	MGEHR1212-4	4	12	12	100	12	12	20		M5X12	L4
MGEHL1616-4	MGEHR1616-4	4	16	16	100	16	16	20		M6X14	L5
MGEHL2020-4	MGEHR2020-4	4	20	20	125	20	20	20		M6X14	
MGEHL2525-4	MGEHR2525-4	4	25	25	150	25	25	20		M6X16	
MGEHL3232-4	MGEHR3232-4	4	32	32	170	32	32	25		M6X16	
MGEHL2020-5	MGEHR2020-5	5	20	20	125	20	20	25	MGMN500	M6X14	L5
MGEHL2525-5	MGEHR2525-5	5	25	25	150	25	25	25		M6X16	
MGEHL3232-5	MGEHR3232-5	5	32	32	170	32	32	25		M6X16	
MGEHL2020-6	MGEHR2020-6	6	20	20	125	20	20	25	MGMN600	M6X14	L5
MGEHL2525-6	MGEHR2525-6	6	25	25	150	25	25	25		M6X16	
MGEHL3232-6	MGEHR3232-6	6	32	32	170	32	32	25		M6X16	

MGEH□-L

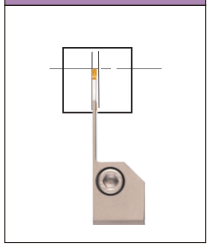

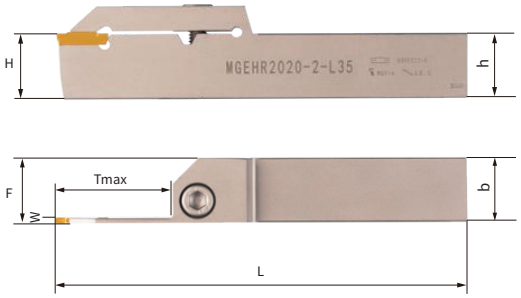

型号Model		尺寸Size (mm)							刀片 Blade	螺丝 Screw	扳手Wrench
左刀 Left	右刀 Right	W	h	b	L	H	F	Tmax			
MGEHL1616-1.5 L20	MGEHR1616-1.5 L20	1.5	16	16	125	16	16	20	MGMN150	M6×14	L5
MGEHL1616-1.5 L25	MGEHR1616-1.5 L25	1.5	16	16	125	16	16	25			
MGEHL1616-2 L20	MGEHR1616-2 L20	2	16	16	125	16	16	20	MGMN200	M6×14	L5
MGEHL1616-2 L25	MGEHR1616-2 L25	2	16	16	125	16	16	25			
MGEHL2020-2 L25	MGEHR2020-2 L25	2	20	20	125	20	20	25			
MGEHL2020-2 L30	MGEHR2020-2 L30	2	20	20	125	20	20	30			
MGEHL2020-2 L35	MGEHR2020-2 L35	2	20	20	125	20	20	35			
MGEHL2525-2 L25	MGEHR2525-2 L25	2	25	25	150	25	25	25		M6×16	
MGEHL2525-2 L30	MGEHR2525-2 L30	2	25	25	150	25	25	30			
MGEHL2525-2 L35	MGEHR2525-2 L35	2	25	25	150	25	25	35			
MGEHL3232-2 L25	MGEHR3232-2 L25	2	32	32	170	32	32	25			
MGEHL3232-2 L30	MGEHR3232-2 L30	2	32	32	170	32	32	30			
MGEHL3232-2 L35	MGEHR3232-2 L35	2	32	32	170	32	32	35			
MGEHL1616-2.5 L20	MGEHR1616-2.5 L20	2.5	16	16	125	16	16	20	MGMN250	M6×14	L5
MGEHL1616-2.5 L25	MGEHR1616-2.5 L25	2.5	16	16	125	16	16	25			
MGEHL2020-2.5 L25	MGEHR2020-2.5 L25	2.5	20	20	125	20	20	25			
MGEHL2020-2.5 L30	MGEHR2020-2.5 L30	2.5	20	20	125	20	20	30			
MGEHL2020-2.5 L35	MGEHR2020-2.5 L35	2.5	20	20	125	20	20	35			
MGEHL2020-2.5 L40	MGEHR2020-2.5 L40	2.5	20	20	150	20	20	40			
MGEHL2525-2.5 L25	MGEHR2525-2.5 L25	2.5	25	25	150	25	25	25		M6×16	
MGEHL2525-2.5 L30	MGEHR2525-2.5 L30	2.5	25	25	150	25	25	30			
MGEHL2525-2.5 L35	MGEHR2525-2.5 L35	2.5	25	25	150	25	25	35			
MGEHL2525-2.5 L40	MGEHR2525-2.5 L40	2.5	25	25	150	25	25	40			
MGEHL3232-2.5 L25	MGEHR3232-2.5 L25	2.5	32	32	170	32	32	25			
MGEHL3232-2.5 L30	MGEHR3232-2.5 L30	2.5	32	32	170	32	32	30			
MGEHL3232-2.5 L35	MGEHR3232-2.5 L35	2.5	32	32	170	32	32	35			
MGEHL3232-2.5 L40	MGEHR3232-2.5 L40	2.5	32	32	170	32	32	40			

切槽(断)刀
GROOVING CUTTER

型号Model		尺寸Size (mm)							刀片 Blade	螺丝 Screw	扳手Wrench
左刀 Left	右刀 Right	W	h	b	L	H	F	Tmax			
MGEHL1616-3 L25	MGEHR1616-3 L25	3	16	16	125	16	16	25	MGMN300	M6×14	L5
MGEHL2020-3 L25	MGEHR2020-3 L25	3	20	20	125	20	20	25			
MGEHL2020-3 L30	MGEHR2020-3 L30	3	20	20	125	20	20	30			
MGEHL2020-3 L35	MGEHR2020-3 L35	3	20	20	125	20	20	35			
MGEHL2020-3 L40	MGEHR2020-3 L40	3	20	20	150	20	20	40			
MGEHL2525-3 L25	MGEHR2525-3 L25	3	25	25	150	25	25	25		M6×16	
MGEHL2525-3 L30	MGEHR2525-3 L30	3	25	25	150	25	25	30			
MGEHL2525-3 L35	MGEHR2525-3 L35	3	25	25	150	25	25	35			
MGEHL2525-3 L40	MGEHR2525-3 L40	3	25	25	150	25	25	40			
MGEHL3232-3 L25	MGEHR3232-3 L25	3	32	32	170	32	32	25			
MGEHL3232-3 L30	MGEHR3232-3 L30	3	32	32	170	32	32	30			
MGEHL3232-3 L35	MGEHR3232-3 L35	3	32	32	170	32	32	35			
MGEHL3232-3 L40	MGEHR3232-3 L40	3	32	32	170	32	32	40			
MGEHL1616-4 L25	MGEHR1616-4 L25	4	16	16	125	16	16	25	MGMN400	M6×14	L5
MGEHL2020-4 L25	MGEHR2020-4 L25	4	20	20	125	20	20	25			
MGEHL2020-4 L30	MGEHR2020-4 L30	4	20	20	125	20	20	30			
MGEHL2020-4 L35	MGEHR2020-4 L35	4	20	20	125	20	20	35			
MGEHL2020-4 L40	MGEHR2020-4 L40	4	20	20	150	20	20	40			
MGEHL2525-4 L25	MGEHR2525-4 L25	4	25	25	150	25	25	25		M6×16	
MGEHL2525-4 L30	MGEHR2525-4 L30	4	25	25	150	25	25	30			
MGEHL2525-4 L35	MGEHR2525-4 L35	4	25	25	150	25	25	35			
MGEHL2525-4 L40	MGEHR2525-4 L40	4	25	25	150	25	25	40			
MGEHL3232-4 L25	MGEHR3232-4 L25	4	32	32	170	32	32	25			
MGEHL3232-4 L30	MGEHR3232-4 L30	4	32	32	170	32	32	30			
MGEHL3232-4 L35	MGEHR3232-4 L35	4	32	32	170	32	32	35			
MGEHL3232-4 L40	MGEHR3232-4 L40	4	32	32	170	32	32	40			
MGEHL2020-5 L30	MGEHR2020-5 L30	5	20	20	125	20	20	30	MGMN500	M6×14	L5
MGEHL2020-5 L35	MGEHR2020-5 L35	5	20	20	125	20	20	35			
MGEHL2020-5 L40	MGEHR2020-5 L40	5	20	20	150	20	20	40			
MGEHL2525-5 L30	MGEHR2525-5 L30	5	25	25	150	25	25	30		M6×16	
MGEHL2525-5 L35	MGEHR2525-5 L35	5	25	25	150	25	25	35			
MGEHL2525-5 L40	MGEHR2525-5 L40	5	25	25	150	25	25	40			
MGEHL3232-5 L30	MGEHR3232-5 L30	5	32	32	170	32	32	30			
MGEHL3232-5 L35	MGEHR3232-5 L35	5	32	32	170	32	32	35			
MGEHL3232-5 L40	MGEHR3232-5 L40	5	32	32	170	32	32	40			
MGEHL2020-6 L30	MGEHR2020-6 L30	6	20	20	125	20	20	30	MGMN600	M6×14	L5
MGEHL2020-6 L35	MGEHR2020-6 L35	6	20	20	125	20	20	35			
MGEHL2020-6 L40	MGEHR2020-6 L40	6	20	20	150	20	20	40			
MGEHL2525-6 L30	MGEHR2525-6 L30	6	25	25	150	25	25	30		M6×16	
MGEHL2525-6 L35	MGEHR2525-6 L35	6	25	25	150	25	25	35			
MGEHL2525-6 L40	MGEHR2525-6 L40	6	25	25	150	25	25	40			
MGEHL3232-6 L30	MGEHR3232-6 L30	6	32	32	170	32	32	30			
MGEHL3232-6 L35	MGEHR3232-6 L35	6	32	32	170	32	32	35			
MGEHL3232-6 L40	MGEHR3232-6 L40	6	32	32	170	32	32	40			

SNG□

内径槽刀

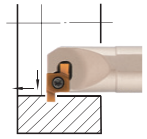

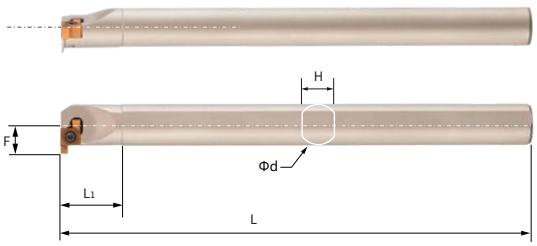

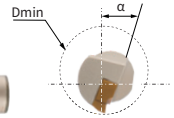

型号Model		尺寸Size (mm)							刀片 Blade	螺丝 Screw	扳手Wrench
左刀 Left	右刀 Right	Φ Dmin	Φd	L	L1	H	F	α°			
S07K-SNGL06	S07K-SNGR06	10.4	7	125	18	6	4.9	18°	6GR/L	M2.2×6	T6
S08K-SNGL06	S08K-SNGR06	11.5	8	125	18	7	5.5	18°			
S08K-SNGL07	S08K-SNGR07	11.8	8	125	18	7	5.8	15°	7GR/L	M2.5×6	T8
S10K-SNGL07	S10K-SNGR07	13.8	10	125	20	9	6.8	15°			
S08K-SNGL08	S08K-SNGR08	12.8	8	125	20	7	6.8	15°	8GR/L	M2.5×8	
S10K-SNGL08	S10K-SNGR08	14.2	10	125	20	9	7.2	15°			
S12M-SNGL08	S12M-SNGR08	16.2	12	150	20	11	8.2	15°			
S14N-SNGL08	S14N-SNGR08	18.2	14	160	20	13	9.2	15°			
S16Q-SNGL08	S16Q-SNGR08	20.2	16	180	20	14.8	10.2	15°			
S12M-SNGL09	S12M-SNGR09	17	12	150	20	11	9	15°	9GR/L		
S14N-SNGL09	S14N-SNGR09	19	14	160	20	13	10	15°			
S16Q-SNGL09	S16Q-SNGR09	21.3	16	180	20	14.8	11.3	15°			
S20R-SNGL09	S20R-SNGR09	25.3	20	200	20	18.6	13.3	15°			

D
切槽(断)刀

SIGE□

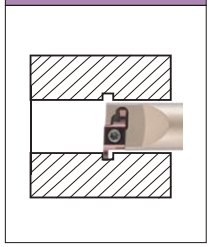

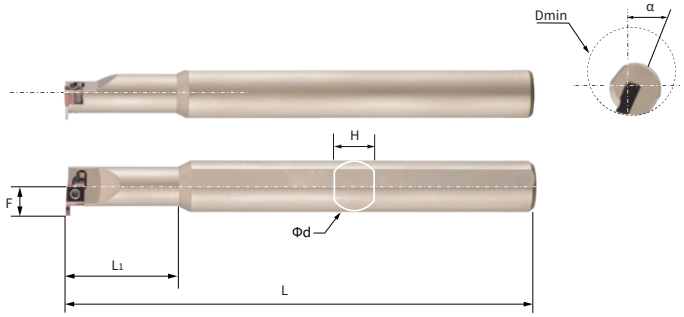

型号Model		尺寸Size (mm)							刀片 Blade	螺丝 Screw	扳手Wrench
左刀 Left	右刀 Right	Φ Dmin	Φd	L	L1	H	F	α°			
SIGEL0808A-EH	SIGER0808A-EH	9.8	8	125	25	7	4.8	18°	GER/L**-A	M2.2×6	T6
SIGEL1010A-EH	SIGER1010A-EH	12	10	125	25	9	6	18°			
SIGEL1010B-EH	SIGER1010B-EH	12	10	125	25	9	6	18°	GER/L**-B	M2.5×6	T8
SIGEL1210B-EH	SIGER1210B-EH	12.8	10	125	30	9	6.8	18°			
SIGEL1212B-EH	SIGER1212B-EH	13.8	12	150	30	11	6.8	18°		M2.5×8	
SIGEL1412B-EH	SIGER1412B-EH	14.8	12	150	32	11	7.8	15°			
SIGEL1210C-EH	SIGER1210C-EH	12.8	10	125	30	9	6.8	18°	GER/L**-C		
SIGEL1412C-EH	SIGER1412C-EH	14.8	12	150	32	11	7.8	15°			
SIGEL1616C-EH	SIGER1616C-EH	17.8	16	180	38	14.8	8.8	15°			
SIGEL1414D-EH	SIGER1414D-EH	19	14	160	30	13	11	15°	GER/L**-D	M3×8	T8
SIGEL2020D-EH	SIGER2020D-EH	22.5	20	180	42	18.6	11.5	15°			
SIGEL2520D-EH	SIGER2520D-EH	23.8	20	180	42	18.6	12.8	15°			
SIGEL2525E-EH	SIGER2525E-EH	29.3	25	200	45	23	15.8	15°	GER/L**-E	M4×10	T15

MG-H

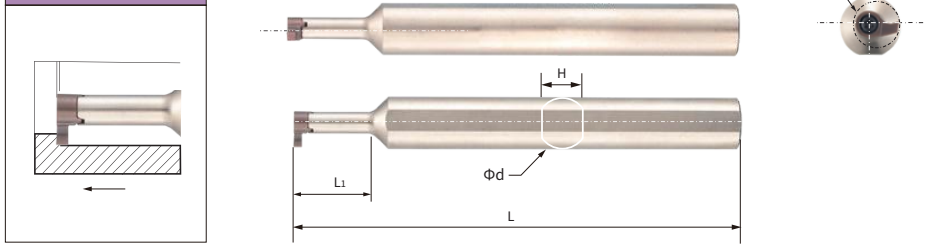

型号Model	尺寸Size (mm)					刀片 Blade	螺丝 Screw	扳手Wrench
	Φ Dmin	Φd	L	L1	H			
MG-H12-15-05R-MB05	9	12	100	15	11	MB05□□	M2.2×6	T6
MG-H16-15-05R-MB05	9	16	120	15	15			
MG-H16-20-07R-MB07	11.5	16	120	20	15	MB07□□	M3×8	T8
MG-H16-30-09R-MB09	16.5	16	120	30	15	MB09□□	M4×10	T15

切槽(断)刀
GROOVING CUTTER

MGIV□

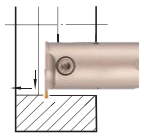

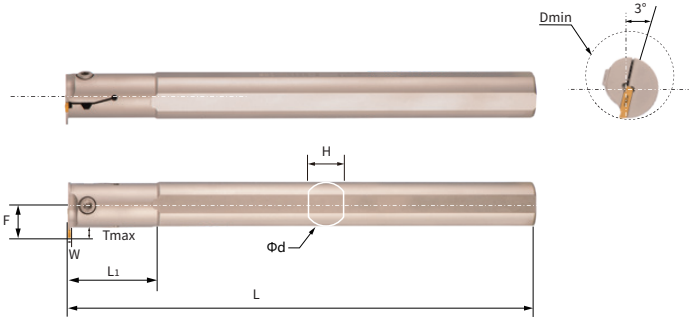

型号Model		尺寸Size (mm)							刀片 Blade	螺丝 Screw	扳手Wrench
左刀 Left	右刀 Right	W	Φd	F	L1	L	H	Tmax			
MGIVL2016-1.5	MGIVR2016-1.5	1.5	16	12.6	30	180	14.8	5	MGMN150	M4×10	L3
MGIVL2016-2	MGIVR2016-2	2		12.6				5	MGMN200		
MGIVL2016-2.5	MGIVR2016-2.5	2.5		14				6	MGMN250		
MGIVL2016-3	MGIVR2016-3	3		14.85				7	MGMN300		
MGIVL2016-4	MGIVR2016-4	4		14.85				7	MGMN400		
MGIVL2520-1.5	MGIVR2520-1.5	1.5	20	14.5	35	200	18.6	5	MGMN150	M5×12	L4
MGIVL2520-2	MGIVR2520-2	2		14.5				5	MGMN200		
MGIVL2520-2.5	MGIVR2520-2.5	2.5		15.5				6	MGMN250		
MGIVL2520-3	MGIVR2520-3	3		16.5				7	MGMN300		
MGIVL2520-4	MGIVR2520-4	4		16.5				7	MGMN400		
MGIVL2520-5	MGIVR2520-5	5		18				8	MGMN500		
MGIVL2925-1.5	MGIVR2925-1.5	1.5	25	17	45	250	23	5	MGMN150	M5×14	L4
MGIVL2925-2	MGIVR2925-2	2		17				5	MGMN200		
MGIVL2925-2.5	MGIVR2925-2.5	2.5		18				6	MGMN250		
MGIVL3125-3	MGIVR3125-3	3		18.9				7	MGMN300		
MGIVL3125-4	MGIVR3125-4	4		18.9				7	MGMN400		
MGIVL3125-5	MGIVR3125-5	5		19.8				8	MGMN500		
MGIVL3732-1.5	MGIVR3732-1.5	1.5	32	20.5	55	300	30	5	MGMN150	M6×20	L5
MGIVL3732-2	MGIVR3732-2	2		20.5				5	MGMN200		
MGIVL3732-2.5	MGIVR3732-2.5	2.5		21.5				6	MGMN250		
MGIVL3732-3	MGIVR3732-3	3		22.5				7	MGMN300		
MGIVL3732-4	MGIVR3732-4	4		22.5				7	MGMN400		
MGIVL3732-5	MGIVR3732-5	5		23.5				8	MGMN500		
MGIVL3732-6	MGIVR3732-6	6		23.5				8	MGMN600		
MGIVL4540-3	MGIVR4540-3	3	40	27.2	55	300	37	8	MGMN300	M6×20	L5
MGIVL4540-4	MGIVR4540-4	4						8	MGMN400		
MGIVL4540-5	MGIVR4540-5	5						8	MGMN500		
MGIVL4540-6	MGIVR4540-6	6						8	MGMN600		

SGIVF□

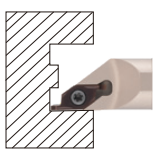

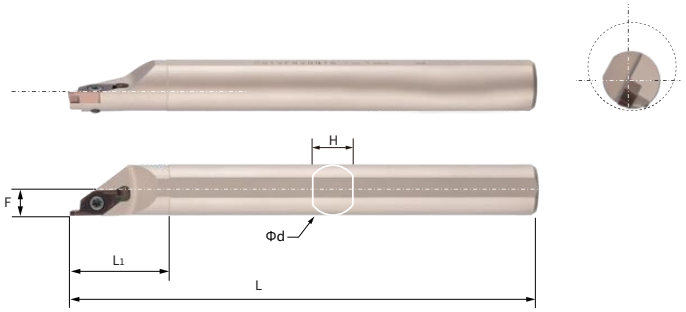

型号Model	尺寸Size (mm)					刀片 Blade	螺丝 Screw	扳手Wrench
	Φd	F	L	L1	H			
SGIVFR10K11	10	5.5	125	17	9	VC1103R/L□□	M2.5×6	T8
SGIVFR12K11	12	6.5	125	17	11			
SGIVFR16Q16	16	8.2	180	27	14.8	VC1604R/L□□	M4×10	T15
SGIVFR20Q16	20	10.2	180	27	18.6			
SGIVFR25R16	25	12.7	200	27	23			

SGB□

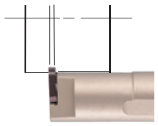

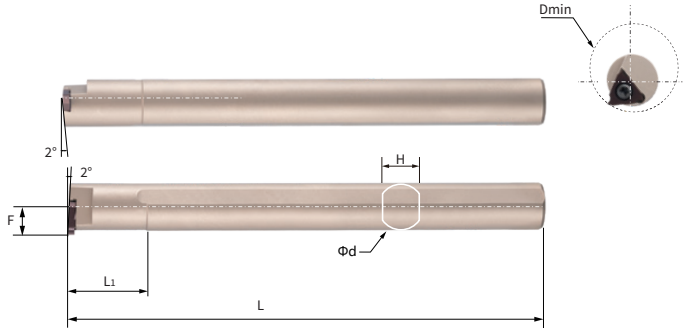

型号Model		尺寸Size (mm)						刀片 Blade	螺丝 Screw	扳手Wrench
左刀 Left	右刀 Right	Φ Dmin	Φd	F	L	L1	H			
S16Q-SGBL16	S16Q-SGBR16	20	16	11	180	15	14.8	TGF32R/L	M4×10	T15
S20R-SGBL16	S20R-SGBR16	25	20	13	200	32	18.6			
S25S-SGBL16	S25S-SGBR16	30	25	15.5	250	35	23			
S32T-SGBL16	S32T-SGBR16	38	32	19	300	40	30			
S32T-SGBL22	S32T-SGBR22	39	32	19.5	300	40	30	TGF43R/L	M5×12	T20

SGE□-D

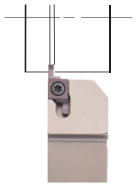

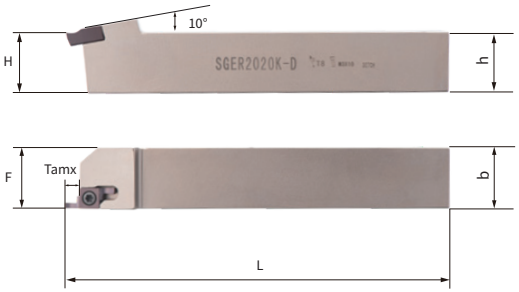

型号Model		尺寸Size (mm)						刀片 Blade	螺丝 Screw	扳手Wrench
左刀 Left	右刀 Right	h	b	L	H	F	Tmax			
SGEL1212H-D	SGER1212H-D	12	12	100	12	12	5	GER/L□□-D	M3×10	T8
SGEL1616H-D	SGER1616H-D	16	16	100	16	16	5			
SGEL2020K-D	SGER2020K-D	20	20	125	20	20	5			
SGEL2525M-D	SGER2525M-D	25	25	150	25	25	5			

B-SGE□-D

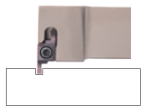

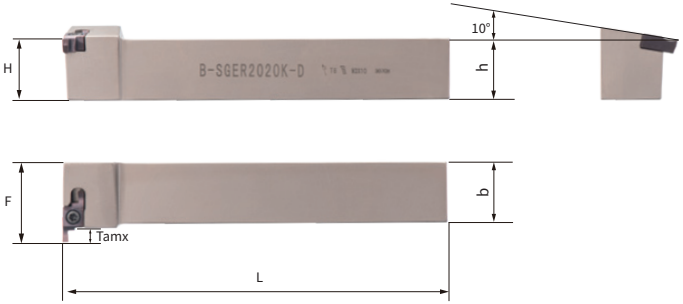

型号Model		尺寸Size (mm)						刀片 Blade	螺丝 Screw	扳手Wrench
左刀 Left	右刀 Right	h	b	L	H	F	Tmax			
B-SGEL1212H-D	B-SGER1212H-D	12	12	100	12	20	5	GER/L□□-D	M3×10	T8
B-SGEL1616H-D	B-SGER1616H-D	16	16	100	16	22	5			
B-SGEL2020K-D	B-SGER2020K-D	20	20	125	20	26	5			
B-SGEL2525M-D	B-SGER2525M-D	25	25	150	25	31	5			

PCH□

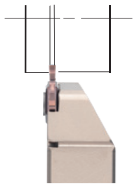

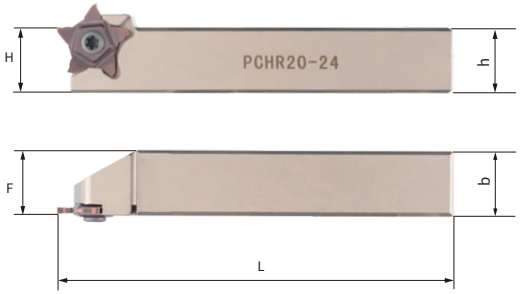

型号Model		尺寸Size (mm)					刀片 Blade	螺丝 Screw	扳手Wrench
左刀 Left	右刀 Right	h	b	L	H	F			
PCHL12-24	PCHR12-24	12	12	100	12	11	PENTA24N239J015	M5×10	T20
PCHL16-24	PCHR16-24	16	16	100	16	15		M5×12	
PCHL20-24	PCHR20-24	20	20	125	20	19			
PCHL25-24	PCHR25-24	25	25	150	25	24			

切槽(断)刀
GROOVING CUTTER

MGAH□

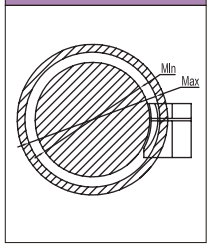

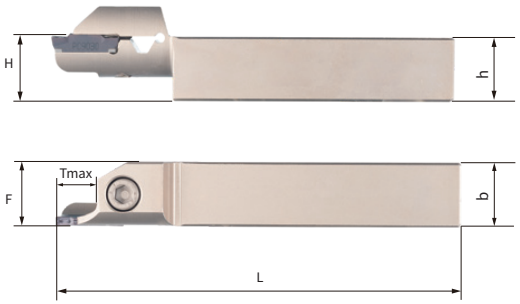

型号Model	尺寸Size (mm)							刀片 Blade	螺丝 Screw	扳手Wrench
	b/h	H	F	L	MIN	MAX	Tmax			
MGAH220R-20/36	20	20	21	125	20	36	8	MGMN200	M6×14	L5
MGAH220R-25/35					25	35	8			
MGAH220R-30/50					30	50	10			
MGAH220R-35/48					35	48	10			
MGAH220R-48/66					48	66	10			
MGAH220R-50/80					50	80	10			
MGAH220R-64/100					64	100	10			
MGAH220R-80/160					80	160	13			
MGAH220R-98/160					98	160	13			
MGAH220R-100/140					100	140	13			
MGAH220R-100/200					100	200	13			
MGAH220R-160/300					160	300	15			
MGAH220R-160/400					160	400	15			
MGAH220R-200/800					200	800	15			
MGAH225R-20/36	25	25	26	150	20	36	8	MGMN200	M6×16	L5
MGAH225R-25/35					25	35	8			
MGAH225R-30/50					30	50	10			
MGAH225R-35/48					35	48	10			
MGAH225R-48/66					48	66	10			
MGAH225R-50/80					50	80	10			
MGAH225R-64/100					64	100	10			
MGAH225R-80/160					80	160	13			
MGAH225R-98/160					98	160	13			
MGAH225R-100/140					100	140	13			
MGAH225R-100/200					100	200	13			
MGAH225R-160/300					160	300	15			
MGAH225R-160/400					160	400	15			
MGAH225R-200/800					200	800	15			

型号Model	尺寸Size (mm)							刀片 Blade	螺丝 Screw	扳手Wrench
	b/h	H	F	L	MIN	MAX	Tmax			
MGAH2.520R-20/36	20	20	21	125	20	36	8	MGMN250	M6×14	L5
MGAH2.520R-25/35					25	35	8			
MGAH2.520R-30/50					30	50	10			
MGAH2.520R-35/48					35	48	10			
MGAH2.520R-48/66					48	66	10			
MGAH2.520R-50/80					50	80	10			
MGAH2.520R-64/100					64	100	10			
MGAH2.520R-80/160					80	160	13			
MGAH2.520R-98/160					98	160	13			
MGAH2.520R-100/140					100	140	13			
MGAH2.520R-100/200					100	200	13			
MGAH2.520R-160/300					160	300	15			
MGAH2.520R-160/400					160	400	15			
MGAH2.520R-200/800					200	800	15			
MGAH2.525R-20/36	25	25	26	150	20	36	8	MGMN250	M6×16	L5
MGAH2.525R-25/35					25	35	8			
MGAH2.525R-30/50					30	50	10			
MGAH2.525R-35/48					35	48	10			
MGAH2.525R-48/66					48	66	10			
MGAH2.525R-50/80					50	80	10			
MGAH2.525R-64/100					64	100	10			
MGAH2.525R-80/160					80	160	13			
MGAH2.525R-98/160					98	160	13			
MGAH2.525R-100/140					100	140	13			
MGAH2.525R-100/200					100	200	13			
MGAH2.525R-160/300					160	300	15			
MGAH2.525R-160/400					160	400	15			
MGAH2.525R-200/800					200	800	15			
MGAH320R-20/36	20	20	21	125	20	36	13	MGMN300	M6×14	L5
MGAH320R-25/35					25	35	13			
MGAH320R-30/50					30	50	16			
MGAH320R-35/48					35	48	16			
MGAH320R-48/66					48	66	16			
MGAH320R-50/80					50	80	16			
MGAH320R-64/100					64	100	16			
MGAH320R-80/160					80	160	18			
MGAH320R-98/160					98	160	18			
MGAH320R-100/140					100	140	18			
MGAH320R-100/200					100	200	18			
MGAH320R-160/300					160	300	20			
MGAH320R-160/400					160	400	20			
MGAH320R-200/800					200	800	20			

D
切槽(断)刀

切槽(断)刀
GROOVING CUTTER

型号Model	尺寸Size (mm)							刀片 Blade	螺丝 Screw	扳手Wrench
	b/h	H	F	L	MIN	MAX	Tmax			
MGAH325R-20/36	25	25	26	150	20	36	13	MGMN300	M6×16	L5
MGAH325R-25/35					25	35	13			
MGAH325R-30/50					30	50	16			
MGAH325R-35/48					35	48	16			
MGAH325R-48/66					48	66	16			
MGAH325R-50/80					50	80	16			
MGAH325R-64/100					64	100	16			
MGAH325R-80/160					80	160	18			
MGAH325R-98/160					98	160	18			
MGAH325R-100/140					100	140	18			
MGAH325R-100/200					100	200	18			
MGAH325R-160/300					160	300	20			
MGAH325R-160/400					160	400	20			
MGAH325R-200/800					200	800	20			
MGAH420R-20/36	20	20	21	125	20	36	13	MGMN400	M6×14	L5
MGAH420R-25/35					25	35	13			
MGAH420R-30/50					30	50	16			
MGAH420R-35/48					35	48	16			
MGAH420R-48/66					48	66	16			
MGAH420R-50/80					50	80	16			
MGAH420R-64/100					64	100	16			
MGAH420R-80/160					80	160	18			
MGAH420R-98/160					98	160	18			
MGAH420R-100/140					100	140	18			
MGAH420R-100/200					100	200	18			
MGAH420R-160/300					160	300	20			
MGAH420R-160/400					160	400	20			
MGAH420R-200/800					200	800	20			
MGAH425R-20/36	25	25	26	150	20	36	13	MGMN400	M6×16	L5
MGAH425R-25/35					25	35	13			
MGAH425R-30/50					30	50	16			
MGAH425R-35/48					35	48	16			
MGAH425R-48/66					48	66	16			
MGAH425R-50/80					50	80	16			
MGAH425R-64/100					64	100	16			
MGAH425R-80/160					80	160	18			
MGAH425R-98/160					98	160	18			
MGAH425R-100/140					100	140	18			
MGAH425R-100/200					100	200	18			
MGAH425R-160/300					160	300	20			
MGAH425R-160/400					160	400	20			
MGAH425R-200/800					200	800	20			

型号Model	尺寸Size (mm)							刀片 Blade	螺丝 Screw	扳手Wrench
	b/h	H	F	L	MIN	MAX	Tmax			
MGAH520R-20/36	20	20	21	125	20	36	13	MGMN500	M6×14	L5
MGAH520R-25/35					25	35	13			
MGAH520R-30/50					30	50	16			
MGAH520R-35/48					35	48	16			
MGAH520R-48/66					48	66	16			
MGAH520R-50/80					50	80	16			
MGAH520R-64/100					64	100	16			
MGAH520R-80/160					80	160	18			
MGAH520R-98/160					98	160	18			
MGAH520R-100/140					100	140	18			
MGAH520R-100/200					100	200	18			
MGAH520R-160/300					160	300	20			
MGAH520R-160/400					160	400	20			
MGAH520R-200/800					200	800	20			
MGAH525R-20/36	25	25	26	150	20	36	13	MGMN500	M6×16	L5
MGAH525R-25/35					25	35	13			
MGAH525R-30/50					30	50	16			
MGAH525R-35/48					35	48	16			
MGAH525R-48/66					48	66	16			
MGAH525R-50/80					50	80	16			
MGAH525R-64/100					64	100	16			
MGAH525R-80/160					80	160	18			
MGAH525R-98/160					98	160	18			
MGAH525R-100/140					100	140	18			
MGAH525R-100/200					100	200	18			
MGAH525R-160/300					160	300	20			
MGAH525R-160/400					160	400	20			
MGAH525R-200/800					200	800	20			

D
切槽(断)刀

切槽(断)刀
GROOVING CUTTER

D

切槽(断)刀

MGHH□

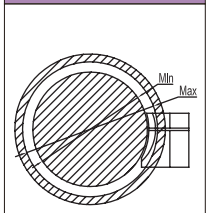

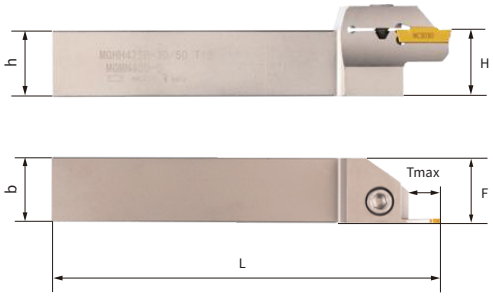

型号Model	尺寸Size (mm)							刀片 Blade	螺丝 Screw	扳手Wrench
	b/h	H	F	L	MIN	MAX	Tmax			
MGHH220R-20/36	20	20	21	125	20	36	8	MGMN200	M6×14	L5
MGHH220R-25/35					25	35	8			
MGHH220R-30/50					30	50	10			
MGHH220R-35/48					35	48	10			
MGHH220R-48/66					48	66	10			
MGHH220R-50/80					50	80	10			
MGHH220R-64/100					64	100	10			
MGHH220R-80/160					80	160	13			
MGHH220R-98/160					98	160	13			
MGHH220R-100/140					100	140	13			
MGHH220R-100/200					100	200	13			
MGHH220R-160/300					160	300	15			
MGHH220R-160/400					160	400	15			
MGHH220R-200/800					200	800	15			
MGHH225R-20/36	25	25	26	150	20	36	8	MGMN200	M6×16	L5
MGHH225R-25/35					25	35	8			
MGHH225R-30/50					30	50	10			
MGHH225R-35/48					35	48	10			
MGHH225R-48/66					48	66	10			
MGHH225R-50/80					50	80	10			
MGHH225R-64/100					64	100	10			
MGHH225R-80/160					80	160	13			
MGHH225R-98/160					98	160	13			
MGHH225R-100/140					100	140	13			
MGHH225R-100/200					100	200	13			
MGHH225R-160/300					160	300	15			
MGHH225R-160/400					160	400	15			
MGHH225R-200/800					200	800	15			

型号Model	尺寸Size (mm)							刀片 Blade	螺丝 Screw	扳手Wrench
	b/h	H	F	L	MIN	MAX	Tmax			
MGHH2.520R-20/36	20	20	21	125	20	36	8	MGMN250	M6×14	L5
MGHH2.520R-25/35					25	35	8			
MGHH2.520R-30/50					30	50	10			
MGHH2.520R-35/48					35	48	10			
MGHH2.520R-48/66					48	66	10			
MGHH2.520R-50/80					50	80	10			
MGHH2.520R-64/100					64	100	10			
MGHH2.520R-80/160					80	160	13			
MGHH2.520R-98/160					98	160	13			
MGHH2.520R-100/140					100	140	13			
MGHH2.520R-100/200					100	200	13			
MGHH2.520R-160/300					160	300	15			
MGHH2.520R-160/400					160	400	15			
MGHH2.520R-200/800					200	800	15			
MGHH2.525R-20/36	25	25	26	150	20	36	8	MGMN250	M6×16	L5
MGHH2.525R-25/35					25	35	8			
MGHH2.525R-30/50					30	50	10			
MGHH2.525R-35/48					35	48	10			
MGHH2.525R-48/66					48	66	10			
MGHH2.525R-50/80					50	80	10			
MGHH2.525R-64/100					64	100	10			
MGHH2.525R-80/160					80	160	13			
MGHH2.525R-98/160					98	160	13			
MGHH2.525R-100/140					100	140	13			
MGHH2.525R-100/200					100	200	13			
MGHH2.525R-160/300					160	300	15			
MGHH2.525R-160/400					160	400	15			
MGHH2.525R-200/800					200	800	15			
MGHH320R-20/36	20	20	21	125	20	36	13	MGMN300	M6×14	L5
MGHH320R-25/35					25	35	13			
MGHH320R-30/50					30	50	15			
MGHH320R-35/48					35	48	15			
MGHH320R-48/66					48	66	15			
MGHH320R-50/80					50	80	15			
MGHH320R-64/100					64	100	15			
MGHH320R-80/160					80	160	17			
MGHH320R-98/160					98	160	17			
MGHH320R-100/140					100	140	17			
MGHH320R-100/200					100	200	17			
MGHH320R-160/300					160	300	19			
MGHH320R-160/400					160	400	19			
MGHH320R-200/800					200	800	19			

D

切槽(断)刀

切槽(断)刀
GROOVING CUTTER

型号Model	尺寸Size (mm)							刀片 Blade	螺丝 Screw	扳手Wrench
	b/h	H	F	L	MIN	MAX	Tmax			
MGHH325R-20/36	25	25	26	150	20	36	13	MGMN300	M6×16	L5
MGHH325R-25/35					25	35	13			
MGHH325R-30/50					30	50	15			
MGHH325R-35/48					35	48	15			
MGHH325R-48/66					48	66	15			
MGHH325R-50/80					50	80	15			
MGHH325R-64/100					64	100	15			
MGHH325R-80/160					80	160	17			
MGHH325R-98/160					98	160	17			
MGHH325R-100/140					100	140	17			
MGHH325R-100/200					100	200	17			
MGHH325R-160/300					160	300	19			
MGHH325R-160/400					160	400	19			
MGHH325R-200/800					200	800	19			
MGHH420R-20/36	20	20	21	125	20	36	13	MGMN400	M6×14	L5
MGHH420R-25/35					25	35	13			
MGHH420R-30/50					30	50	15			
MGHH420R-35/48					35	48	15			
MGHH420R-48/66					48	66	15			
MGHH420R-50/80					50	80	15			
MGHH420R-64/100					64	100	15			
MGHH420R-80/160					80	160	17			
MGHH420R-98/160					98	160	17			
MGHH420R-100/140					100	140	17			
MGHH420R-100/200					100	200	17			
MGHH420R-160/300					160	300	19			
MGHH420R-160/400					160	400	19			
MGHH420R-200/800					200	800	19			
MGHH425R-20/36	25	25	26	150	20	36	13	MGMN400	M6×16	L5
MGHH425R-25/35					25	35	13			
MGHH425R-30/50					30	50	15			
MGHH425R-35/48					35	48	15			
MGHH425R-48/66					48	66	15			
MGHH425R-50/80					50	80	15			
MGHH425R-64/100					64	100	15			
MGHH425R-80/160					80	160	17			
MGHH425R-98/160					98	160	17			
MGHH425R-100/140					100	140	17			
MGHH425R-100/200					100	200	17			
MGHH425R-160/300					160	300	19			
MGHH425R-160/400					160	400	19			
MGHH425R-200/800					200	800	19			

型号Model	尺寸Size (mm)							刀片 Blade	螺丝 Screw	扳手Wrench
	b/h	H	F	L	MIN	MAX	Tmax			
MGHH520R-20/36	20	20	21	125	20	36	16	MGMN500	M6×14	L5
MGHH520R-25/35					25	35	16			
MGHH520R-30/50					30	50	20			
MGHH520R-35/48					35	48	20			
MGHH520R-48/66					48	66	20			
MGHH520R-50/80					50	80	20			
MGHH520R-64/100					64	100	20			
MGHH520R-80/160					80	160	20			
MGHH520R-98/160					98	160	20			
MGHH520R-100/140					100	140	20			
MGHH520R-100/200					100	200	20			
MGHH520R-160/300					160	300	20			
MGHH520R-160/400					160	400	20			
MGHH520R-200/800					200	800	20			
MGHH525R-20/36	25	25	26	150	20	36	16	MGMN500	M6×16	L5
MGHH525R-25/35					25	35	16			
MGHH525R-30/50					30	50	20			
MGHH525R-35/48					35	48	20			
MGHH525R-48/66					48	66	20			
MGHH525R-50/80					50	80	20			
MGHH525R-64/100					64	100	20			
MGHH525R-80/160					80	160	20			
MGHH525R-98/160					98	160	20			
MGHH525R-100/140					100	140	20			
MGHH525R-100/200					100	200	20			
MGHH525R-160/300					160	300	20			
MGHH525R-160/400					160	400	20			
MGHH525R-200/800					200	800	20			

D
切槽(断)刀

切槽(断)刀
GROOVING CUTTER

D

切槽(断)刀

MGHH□- 加长

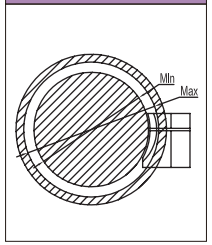

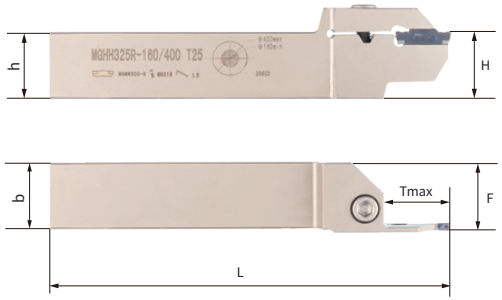

型号Model	尺寸Size (mm)							刀片 Blade	螺丝 Screw	扳手Wrench
	b/h	H	F	L	MIN	MAX	Tmax			
MGHH320R-20/36	20	20	21	125	20	36	25	MGMN300	M6×14	L5
MGHH320R-25/35					25	35				
MGHH320R-30/50					30	50				
MGHH320R-35/48					35	48				
MGHH320R-48/66					48	66				
MGHH320R-50/80					50	80				
MGHH320R-64/100					64	100				
MGHH320R-80/160					80	160				
MGHH320R-98/160					98	160				
MGHH320R-100/140					100	140				
MGHH320R-100/200					100	200				
MGHH320R-160/300					160	300				
MGHH320R-160/400					160	400				
MGHH320R-200/800					200	800				
MGHH325R-20/36	25	25	26	150	20	36	25	MGMN300	M6×16	L5
MGHH325R-25/35					25	35				
MGHH325R-30/50					30	50				
MGHH325R-35/48					35	48				
MGHH325R-48/66					48	66				
MGHH325R-50/80					50	80				
MGHH325R-64/100					64	100				
MGHH325R-80/160					80	160				
MGHH325R-98/160					98	160				
MGHH325R-100/140					100	140				
MGHH325R-100/200					100	200				
MGHH325R-160/300					160	300				
MGHH325R-160/400					160	400				
MGHH325R-200/800					200	800				

型号Model	尺寸Size (mm)							刀片 Blade	螺丝 Screw	扳手Wrench
	b/h	H	F	L	MIN	MAX	Tmax			
MGHH420R-20/36	20	20	21	125	20	36	25	MGMN400	M6×14	L5
MGHH420R-25/35					25	35				
MGHH420R-30/50					30	50				
MGHH420R-35/48					35	48				
MGHH420R-48/66					48	66				
MGHH420R-50/80					50	80				
MGHH420R-64/100					64	100				
MGHH420R-80/160					80	160				
MGHH420R-98/160					98	160				
MGHH420R-100/140					100	140				
MGHH420R-100/200					100	200				
MGHH420R-160/300					160	300				
MGHH420R-160/400					160	400				
MGHH420R-200/800					200	800				
MGHH425R-20/36	25	25	26	150	20	36	25	MGMN400	M6×16	L5
MGHH425R-25/35					25	35				
MGHH425R-30/50					30	50				
MGHH425R-35/48					35	48				
MGHH425R-48/66					48	66				
MGHH425R-50/80					50	80				
MGHH425R-64/100					64	100				
MGHH425R-80/160					80	160				
MGHH425R-98/160					98	160				
MGHH425R-100/140					100	140				
MGHH425R-100/200					100	200				
MGHH425R-160/300					160	300				
MGHH425R-160/400					160	400				
MGHH425R-200/800					200	800				

D

切槽(断)刀

型号Model	尺寸Size (mm)							刀片 Blade	螺丝 Screw	扳手Wrench
	b/h	H	F	L	MIN	MAX	Tmax			
MGHH520R-20/36	20	20	21	125	20	36	25	MGMN500	M6×14	L5
MGHH520R-25/35					25	35				
MGHH520R-30/50					30	50				
MGHH520R-35/48					35	48				
MGHH520R-48/66					48	66				
MGHH520R-50/80					50	80				
MGHH520R-64/100					64	100				
MGHH520R-80/160					80	160				
MGHH520R-98/160					98	160				
MGHH520R-100/140					100	140				
MGHH520R-100/200					100	200				
MGHH520R-160/300					160	300				
MGHH520R-160/400					160	400				
MGHH520R-200/800					200	800				
MGHH525R-20/36	25	25	26	150	20	36	25	MGMN500	M6×16	L5
MGHH525R-25/35					25	35				
MGHH525R-30/50					30	50				
MGHH525R-35/48					35	48				
MGHH525R-48/66					48	66				
MGHH525R-50/80					50	80				
MGHH525R-64/100					64	100				
MGHH525R-80/160					80	160				
MGHH525R-98/160					98	160				
MGHH525R-100/140					100	140				
MGHH525R-100/200					100	200				
MGHH525R-160/300					160	300				
MGHH525R-160/400					160	400				
MGHH525R-200/800					200	800				

MGFV□

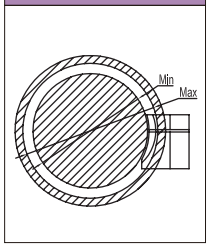

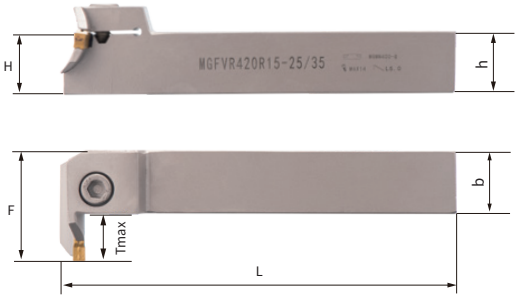

型号Model	尺寸Size (mm)							刀片 Blade	螺丝 Screw	扳手Wrench
	b/h	H	F	L	MIN	MAX	Tmax			
MGFV320R-20/36	20	20	34	125	20	36	14	MGMN300	M6×14	L5
MGFV320R-25/35					25	35				
MGFV320R-30/50			35		30	50	15			
MGFV320R-35/48					35	48				
MGFV320R-48/66					48	66				
MGFV320R-50/80					50	80				
MGFV320R-64/100					64	100				
MGFV320R-80/160					80	160				
MGFV320R-98/160					98	160				
MGFV320R-100/140					100	140				
MGFV320R-100/200					100	200				
MGFV320R-160/300					160	300				
MGFV320R-160/400					160	400				
MGFV320R-200/800					200	800				
MGFV325R-20/36	25	25	39	150	20	36	14	MGMN300	M6×16	L5
MGFV325R-25/35					25	35				
MGFV325R-30/50			40		30	50	15			
MGFV325R-35/48					35	48				
MGFV325R-48/66					48	66				
MGFV325R-50/80					50	80				
MGFV325R-64/100					64	100				
MGFV325R-80/160					80	160				
MGFV325R-98/160					98	160				
MGFV325R-100/140					100	140				
MGFV325R-100/200					100	200				
MGFV325R-160/300					160	300				
MGFV325R-160/400					160	400				
MGFV325R-200/800					200	800				

切槽(断)刀
GROOVING CUTTER

PEVEN

D 切槽(断)刀

型号Model	尺寸Size (mm)							刀片 Blade	螺丝 Screw	扳手Wrench
	b/h	H	F	L	MIN	MAX	Tmax			
MGFV420R-20/36	20	20	34	125	20	36	14	MGMN400	M6×14	L5
MGFV420R-25/35					25	35				
MGFV420R-30/50			35		30	50	15			
MGFV420R-35/48					35	48				
MGFV420R-48/66					48	66				
MGFV420R-50/80					50	80				
MGFV420R-64/100					64	100				
MGFV420R-80/160					80	160				
MGFV420R-98/160					98	160				
MGFV420R-100/140					100	140				
MGFV420R-100/200					100	200				
MGFV420R-160/300					160	300				
MGFV420R-160/400					160	400				
MGFV420R-200/800					200	800				
MGFV425R-20/36	25	25	39	150	20	36	14	MGMN400	M6×16	L5
MGFV425R-25/35					25	35				
MGFV425R-30/50			40		30	50	15			
MGFV425R-35/48					35	48				
MGFV425R-48/66					48	66				
MGFV425R-50/80					50	80				
MGFV425R-64/100					64	100				
MGFV425R-80/160					80	160				
MGFV425R-98/160					98	160				
MGFV425R-100/140					100	140				
MGFV425R-100/200					100	200				
MGFV425R-160/300					160	300				
MGFV425R-160/400					160	400				
MGFV425R-200/800					200	800				
MGFV520R-20/36	20	20	34	125	20	36	14	MGMN500	M6×14	L5
MGFV520R-25/35					25	35				
MGFV520R-30/50			35		30	50	15			
MGFV520R-35/48					35	48				
MGFV520R-48/66					48	66				
MGFV520R-50/80					50	80				
MGFV520R-64/100					64	100				
MGFV520R-80/160					80	160				
MGFV520R-98/160					98	160				
MGFV520R-100/140					100	140				
MGFV520R-100/200					100	200				
MGFV520R-160/300					160	300				
MGFV520R-160/400					160	400				
MGFV520R-200/800					200	800				

型号Model	尺寸Size (mm)							刀片 Blade	螺丝 Screw	扳手Wrench
	b/h	H	F	L	MIN	MAX	Tmax			
MGFV525R-20/36	25	25	39	150	20	36	14	MGMN500	M6×16	L5
MGFV525R-25/35					25	35				
MGFV525R-30/50			40		30	50	15			
MGFV525R-35/48					35	48				
MGFV525R-48/66					48	66				
MGFV525R-50/80					50	80				
MGFV525R-64/100					64	100				
MGFV525R-80/160					80	160				
MGFV525R-98/160					98	160				
MGFV525R-100/140					100	140				
MGFV525R-100/200					100	200				
MGFV525R-160/300					160	300				
MGFV525R-160/400					160	400				
MGFV525R-200/800					200	800				

MFH□

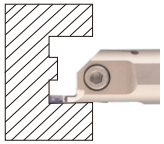

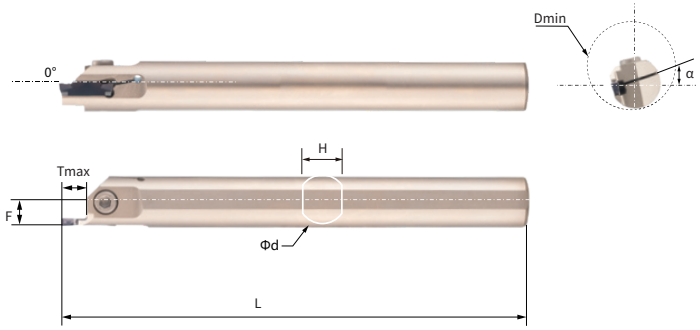

型号Model	尺寸Size (mm)								刀片 Blade	螺丝 Screw	扳手Wrench
	ΦDmin	Φd	L	F	H	min	max	Tmax			
MFH216R06-20/140	17.5	16	180	7.7	14.8	20	140	6	MGMN200□□	M4×10	L3
MFH316R08-20/140								8	MGMN300□□		
MFH220R06-25/140	21	20	180	9.3	18.6	25	140	6	MGMN200□□	M5×12	L4
MFH320R08-25/140								8	MGMN300□□		
MFH420R08-25/140								8	MGMN400□□		
MFH325R08-25/140	26	25	200	12	23	25	140	8	MGMN300□□	M6×14	L5
MFH425R08-25/140								8	MGMN400□□		

KTG□

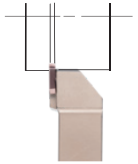

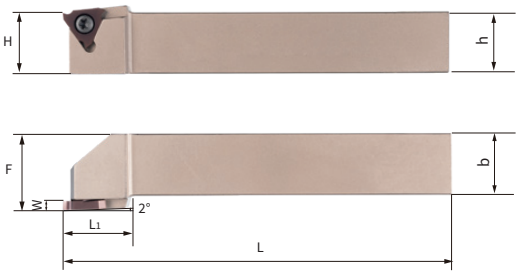

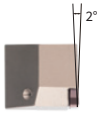

型号Model		尺寸Size (mm)							刀片 Blade	螺丝 Screw	扳手Wrench
左刀 Left	右刀 Right	W	h	b	L	L1	H	F			
KTGFL1212H16	KTGFR1212H16	0.33-2.5	12	12	100	21	12	16	TGF32R/L	M4×10	T15
KTGFL1616H16	KTGFR1616H16	0.33-2.5	16	16	100	21	16	20			
KTGFL2020K16	KTGFR2020K16	0.33-2.5	20	20	125	21	20	25			
KTGFL2525M16	KTGFR2525M16	0.33-2.5	25	25	150	26	25	32			
KTGFL3232P16	KTGFR3232P16	0.33-2.5	32	32	170	32	32	40			
KTGFL2020K22	KTGFR2020K22	1.25-1.85	20	20	125	28	20	25	TGF43R/L	M5×12	T20
KTGFL2525M22	KTGFR2525M22	1.25-1.85	25	25	150	30	25	32			
KTGFL3232P22	KTGFR3232P22	1.25-1.85	32	32	170	32	32	40			

CTGF□

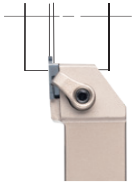

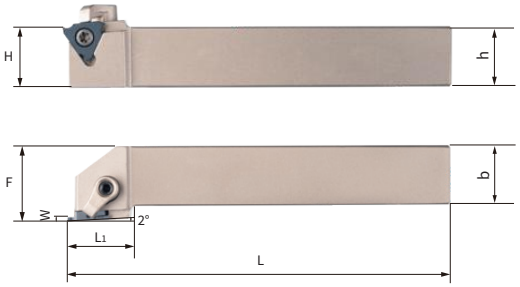

型号Model		尺寸Size (mm)							刀片 Blade	压板 Platen	双头螺栓 Double Screw	扳手 Wrench	螺丝 Screw	扳手 Wrench
左刀 Left	右刀 Right	W	h	b	L	L1	H	F						
CTGFL1616H16	CTGFR1616H16	0.5-0.25	16	16	100	21	16	20	TGF32R/L	HL1511	ML0520	L2.5	M4×10	T15
CTGFL2020K16	CTGFR2020K16	0.5-0.25	20	20	125	21	20	25						
CTGFL2525M16	CTGFR2525M16	0.5-0.25	25	25	150	26	25	32						
CTGFL3232P16	CTGFR3232P16	0.5-0.25	32	32	170	32	32	40						
CTGFL2020K22	CTGFR2020K22	1.25-1.85	20	20	125	28	20	25	TGF43R/L	HL1511	ML0520	L2.5	M5×12	T20
CTGFL2525M22	CTGFR2525M22	1.25-1.85	25	25	150	30	25	32						
CTGFL3232P22	CTGFR3232P22	1.25-1.85	32	32	170	32	32	40						

S-KTGF□

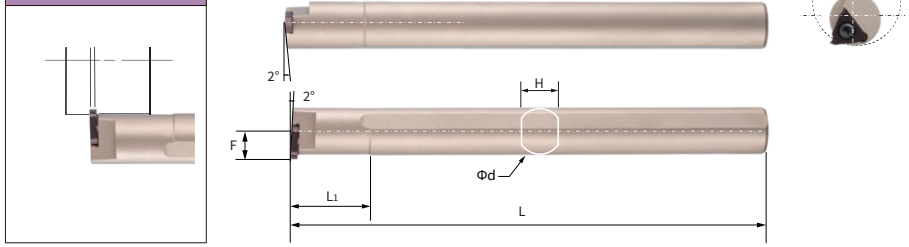

型号Model		尺寸Size (mm)						刀片 Blade	螺丝 Screw	扳手Wrench
左刀 Left	右刀 Right	Φ Dmin	Φd	F	L	L1	H			
S16Q-KTGFL16	S16Q-KTGFR16	20	16	11	180	15	14.8	TGF32R/L	M4×10	T15
S20R-KTGFL16	S20R-KTGFR16	25	20	13	200	32	18.6			
S25S-KTGFL16	S25S-KTGFR16	30	25	15.5	250	35	23			
S32T-KTGFL16	S32T-KTGFR16	38	32	19	300	40	30			
S32T-KTGFL22	S32T-KTGFR22	39	32	19.5	300	40	30	TGF43R/L	M5×12	T20

SPB□

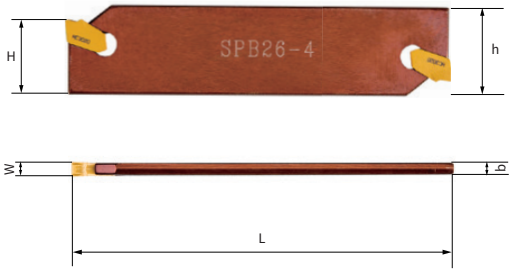

型号Model	尺寸Size (mm)					刀片 Blade
	W	b	h	L	H	
SPB26-2	2	1.6	26	110	21	SP200
SPB26-3	3	2.4				SP300
SPB26-4	4	3.2				SP400
SPB26-5	5	4.2				SP500
SPB26-6	6	5.2				SP600
SPB32-2	2	1.6	32	150	27	SP200
SPB32-3	3	2.4				SP300
SPB32-4	4	3.2				SP400
SPB32-5	5	4.2				SP500
SPB32-6	6	5.2				SP600

SMGB□

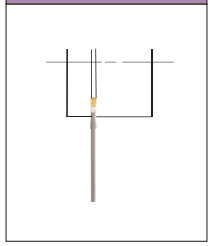

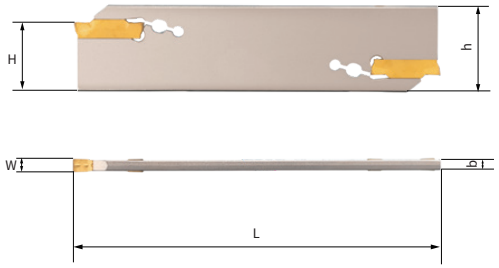

型号Model	尺寸Size (mm)					刀片 Blade	扳手Wrench
	W	b	h	L	H		
SMGB226	2	1.6	26	110	21	MGMN200	L5-K
SMGB326	3	2.4				MGMN300	
SMGB426	4	3.2				MGMN400	
SMGB526	5	4.2				MGMN500	
SMGB232	2	1.6	32	150	27	MGMN200	L5-K
SMGB332	3	2.4				MGMN300	
SMGB432	4	3.2				MGMN400	
SMGB532	5	4.2				MGMN500	
SMGB632	6	5.2				MGMN600	

SVJ□□

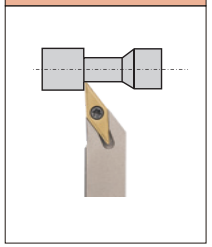

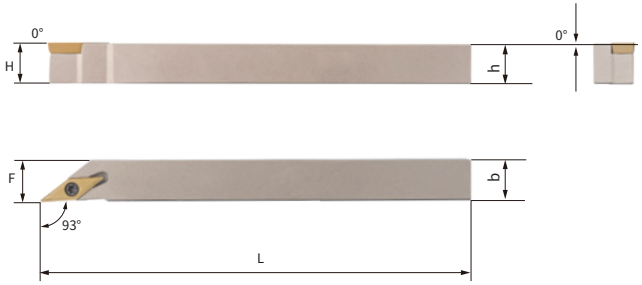

型号Model		尺寸Size (mm)					刀片 Blade	螺丝 Screw	扳手Wrench
左刀 Left	右刀 Right	h	b	H	F	L			
SVJ□L0808JX11N	SVJ□R0808JX11N	8	8	8	8	125	VC□□1103□□ VB□□1103□□	M2.5×6	T8
SVJ□L1010JX11N	SVJ□R1010JX11N	10	10	10	10				
SVJ□L1212JX11N	SVJ□R1212JX11N	12	12	12	12				
SVJ□L1616JX11N	SVJ□R1616JX11N	16	16	16	16				
SVJ□L1212JX16N	SVJ□R1212JX16N	12	12	12	12	125	VC□□1604□□ VB□□1604□□	M4×10	T15
SVJ□L1616JX16N	SVJ□R1616JX16N	16	16	16	16				

走心机车刀
TURNING TOOL FOR CNC PRECISION AUTOMATIC LATHE

SCAC□

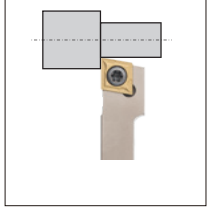

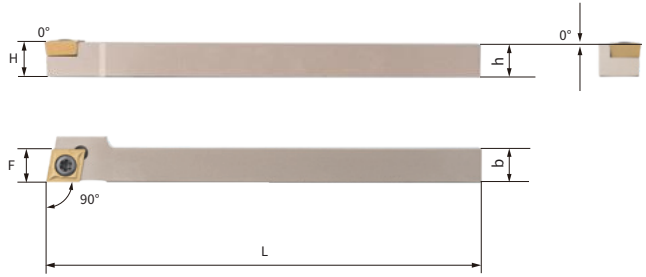

型号Model		尺寸Size (mm)					刀片 Blade	螺丝 Screw	扳手Wrench
左刀 Left	右刀 Right	h	b	H	F	L			
SCACL0808JX06N	SCACR0808JX06N	8	8	8	8	125	CC□□0602□□	M2.5×6	T8
SCACL1010JX06N	SCACR1010JX06N	10	10	10	10				
SCACL1212JX06N	SCACR1212JX06N	12	12	12	12				
SCACL1616JX06N	SCACR1616JX06N	16	16	16	16				
SCACL1212JX09N	SCACR1212JX09N	12	12	12	12	125	CC□□09T3□□	M4×10	T15
SCACL1616JX09N	SCACR1616JX09N	16	16	16	16				

SCLC□

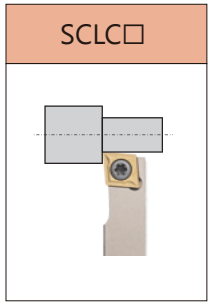

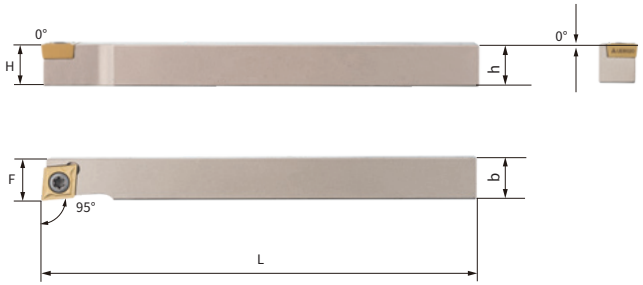

型号Model		尺寸Size (mm)					刀片 Blade	螺丝 Screw	扳手Wrench
左刀 Left	右刀 Right	h	b	H	F	L			
SCLCL0808JX06N	SCLCR0808JX06N	8	8	8	8	125	CC□□0602□□	M2.5×6	T8
SCLCL1010JX06N	SCLCR1010JX06N	10	10	10	10				
SCLCL1212JX06N	SCLCR1212JX06N	12	12	12	12				
SCLCL1616JX06N	SCLCR1616JX06N	16	16	16	16				
SCLCL1212JX09N	SCLCR1212JX09N	12	12	12	12	125	CC□□09T3□□	M4×10	T15
SCLCL1616JX09N	SCLCR1616JX09N	16	16	16	16				

走心机车刀
TURNING TOOL FOR CNC PRECISION AUTOMATIC LATHE

SDAC□

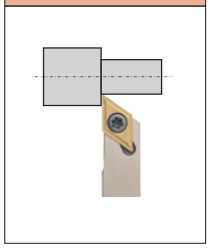

型号Model		尺寸Size (mm)					刀片 Blade	螺丝 Screw	扳手Wrench
左刀 Left	右刀 Right	h	b	H	F	L			
SDACL0808JX07N	SDACR0808JX07N	8	8	8	8	125	DC□□0702□□	M2.5×6	T8
SDACL1010JX07N	SDACR1010JX07N	10	10	10	10				
SDACL1212JX07N	SDACR1212JX07N	12	12	12	12				
SDACL1616JX07N	SDACR1616JX07N	16	16	16	16				
SDACL1212JX11N	SDACR1212JX11N	12	12	12	12	125	DC□□11T3□□	M4×10	T15
SDACL1616JX11N	SDACR1616JX11N	16	16	16	16				

SDJC□

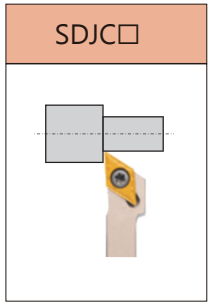

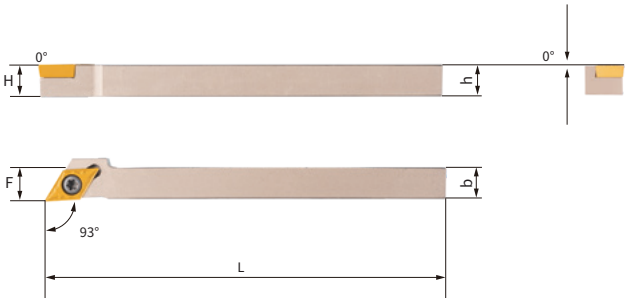

型号Model		尺寸Size (mm)					刀片 Blade	螺丝 Screw	扳手Wrench
左刀 Left	右刀 Right	h	b	H	F	L			
SDJCL0808JX07N	SDJCR0808JX07N	8	8	8	8	125	DC□□0702□□	M2.5×6	T8
SDJCL1010JX07N	SDJCR1010JX07N	10	10	10	10				
SDJCL1212JX07N	SDJCR1212JX07N	12	12	12	12				
SDJCL1616JX07N	SDJCR1616JX07N	16	16	16	16				
SDJCL1212JX11N	SDJCR1212JX11N	12	12	12	12	125	DC□□11T3□□	M4×10	T15
SDJCL1616JX11N	SDJCR1616JX11N	16	16	16	16				

SABSR

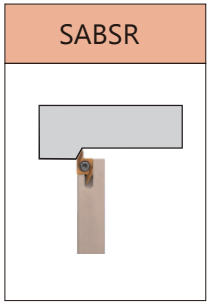

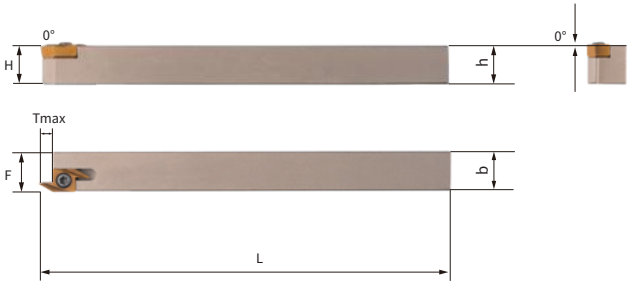

型号Model	尺寸Size (mm)						刀片 Blade	螺丝 Screw	扳手Wrench
	h	b	H	F	L	Tmax			
SABSR1010JX-40F	10	10	10	10	125	4	ABS15R4005	M3×8	T8
SABSR1212JX-40F	12	12	12	12	125				
SABSR1616JX-40F	16	16	16	16	125				
SABSR2020JX-40F	20	20	20	20	125				
SABWR1010JX-40F	10	10	10	10	125	4	ABW15R4005		
SABWR1212JX-40F	12	12	12	12	125				
SABWR1616JX-40F	16	16	16	16	125				
SABWR2020JX-40F	20	20	20	20	125				
SABWR1212JX-50F	12	12	12	12	125	8	ABW23R50		
SABWR1616M-50F	16	16	16	16	150				
SABWR2020M-50F	20	20	20	20	150				

CTP□

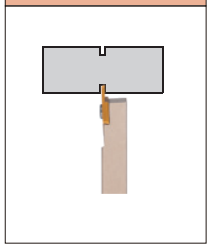

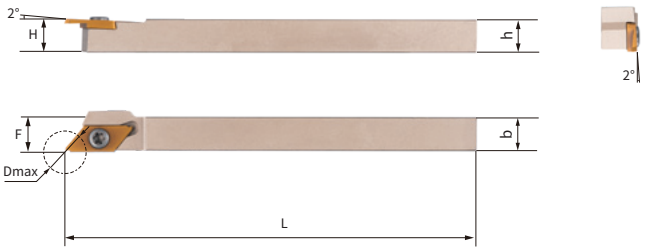

型号Model		尺寸Size (mm)						刀片 Blade	螺丝 Screw	扳手Wrench
左刀 Left	右刀 Right	h	b	H	F	L	Dmax			
CTPL08	CTPR08	8	8	8	8	120	6	CTP□□	M4×10	T15
CTPL10	CTPR10	10	10	10	10					
CTPL12	CTPR12	12	12	12	12					
CTPL16	CTPR16	16	16	16	16					
CTPL20	CTPR20	20	20	20	20					
CTPAL08	CTPAR08	8	8	8	8	120	8	CTPA□□		
CTPAL10	CTPAR10	10	10	10	10					
CTPAL12	CTPAR12	12	12	12	12					
CTPAL16	CTPAR16	16	16	16	16					
CTPAL20	CTPAR20	20	20	20	20					

E 走心机车刀

KTKF□

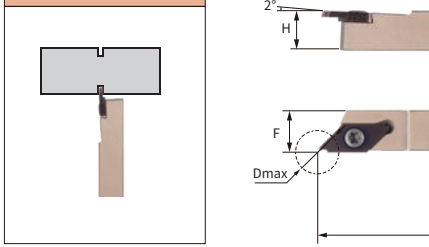

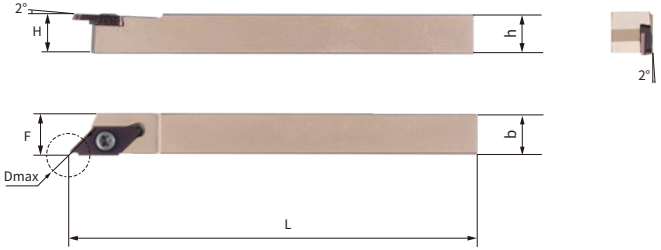

型号Model		尺寸Size (mm)						刀片 Blade	螺丝 Screw	扳手Wrench
左刀 Left	右刀 Right	h	b	H	F	L	Dmax			
KTKFL0808JX-12	KTKFR0808JX-12	8	8	8	8	120	6	TKF12R/L	M4×10	T15
KTKFL1010JX-12	KTKFR1010JX-12	10	10	10	10					
KTKFL1212JX-12	KTKFR1212JX-12	12	12	12	12					
KTKFL1616JX-12	KTKFR1616JX-12	16	16	16	16					
KTKFL2020JX-12	KTKFR2020JX-12	20	20	20	20					
KTKFL0808JX-16	KTKFR0808JX-16	8	8	8	8	120	8	TKF16R/L	M4×10	T15
KTKFL1010JX-16	KTKFR1010JX-16	10	10	10	10					
KTKFL1212JX-16	KTKFR1212JX-16	12	12	12	12					
KTKFL1616JX-16	KTKFR1616JX-16	16	16	16	16					
KTKFL2020JX-16	KTKFR2020JX-16	20	20	20	20					

E 走心机车刀

SE□-F

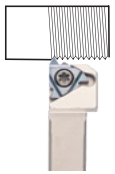

型号Model		尺寸Size (mm)						刀片 Blade	螺丝 Screw	扳手Wrench
左刀 Left	右刀 Right	h	b	L	L1	H	F			
SEL1010K16-F	SER1010K16-F	10	10	125	20	10	10	16ER/L	M3.5×9	T15
SEL1212K16-F	SER1212K16-F	12	12	125	20	12	12			
SEL1616K16-F	SER1616K16-F	16	16	125	23	16	16			
SEL2020K16-F	SER2020K16-F	20	20	125	23	20	20			

DS-SVU

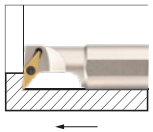

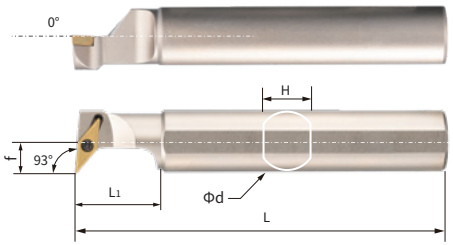

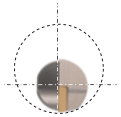

型号Model	尺寸Size (mm)					刀片 Blade	螺丝 Screw	扳手Wrench
	Φd	L	L1	H	f			
DS-SVUBL20K11	20	120	26	18.6	10.5	VBMT1103□□	M2.5×6	T8

DS-KTG

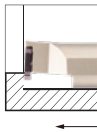

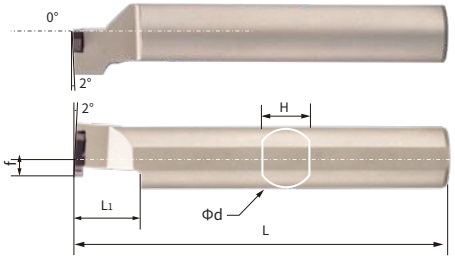

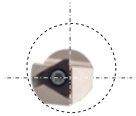

型号Model	尺寸Size (mm)					刀片 Blade	螺丝 Screw	扳手Wrench
	Φd	L	L1	H	f			
DS-KTGFL20K16	20	120	20	18.6	6	TGF32□□	M3.5×9	T15

KGM□

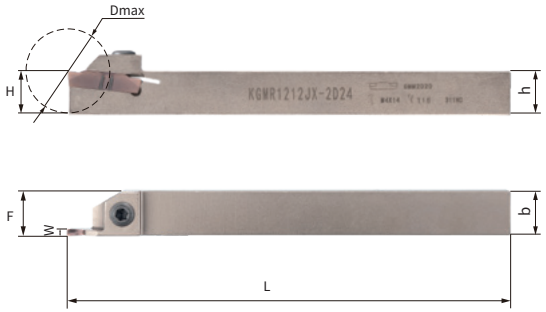

型号Model		尺寸Size (mm)							刀片 Blade	螺丝 Screw	扳手Wrench
左刀 Left	右刀 Right	W	h	b	L	H	F	Dmax			
KGML1010JX-1.5D24	KGMR1010JX-1.5D24	1.5	10	10	120	10	10.15	12	GMN1520-MT	M4×12	T15
KGML1010JX-2D24	KGMR1010JX-2D24	2	10	10	120	10	10.2	12	GMN2020-MT		
KGML1212JX-1.5D24	KGMR1212JX-1.5D24	1.5	12	12	120	12	12.15	12	GMN1520-MT		
KGML1212JX-2D24	KGMR1212JX-2D24	2	12	12	120	12	12.2	12	GMN2020-MT		

TTE□

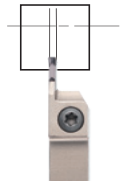

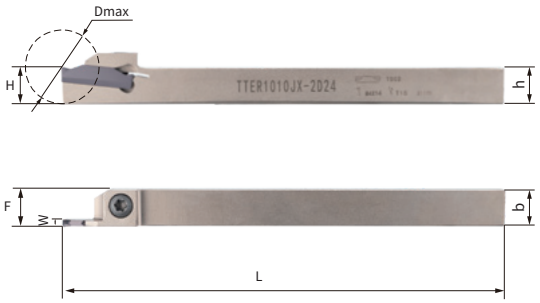

型号Model		尺寸Size (mm)							刀片 Blade	螺丝 Screw	扳手Wrench
左刀 Left	右刀 Right	W	h	b	L	H	F	Dmax			
TTEL1010JX-2D24	TTER1010JX-2D24	2	10	10	120	10	10.2	12	TDC2	M4×12	T15
TTEL1212JX-2D24	TTER1212JX-2D24	2	12	12	120	12	12.2	12	TDC2		

MGEH□

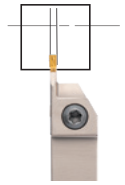

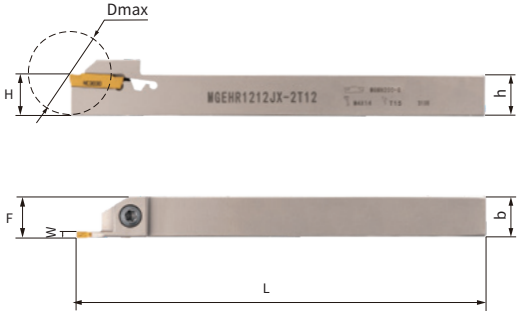

型号Model		尺寸Size (mm)							刀片 Blade	螺丝 Screw	扳手Wrench
左刀 Left	右刀 Right	W	h	b	L	H	F	Dmax			
MGEHL1212JX-1.5T12	MGEHR1212JX-1.5T12	1.5	12	12	100	12	12.15	12	MGMN150	M4×12	T15
MGEHL1212JX-2T12	MGEHR1212JX-2T12	2	12	12	100	12	12.2	12	MGMN200		

走心机车刀
TURNING TOOL FOR CNC PRECISION AUTOMATIC LATHE

B-KTK

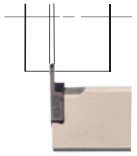

型号Model	尺寸Size (mm)						刀片 Blade	螺丝 Screw	扳手Wrench
	h	b	H	F	L	Dmax			
B-KTKL1212JX-12	12	12	12	24	120	6	TKF12	M4×10	T15
B-KTKL1616JX-12	16	16	16	24					
B-KTKL2020JX-12	20	20	20	26					
B-KTKL1212JX-16	12	12	12	26.5	120	8	TKF16	M4×10	T15
B-KTKL1616JX-16	16	16	16	26.5					
B-KTKL2020JX-16	20	20	20	28					

PTXN□

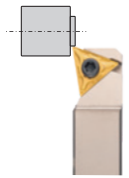

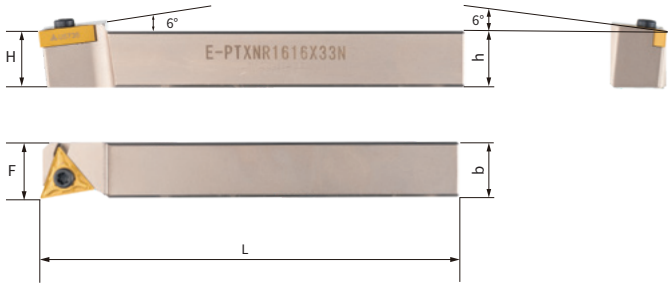

型号Model	尺寸Size (mm)					刀片 Blade	螺丝 Screw	扳手Wrench
	h	b	L	H	F			
E-PTXNR1016X33N	10	16	120	10	16	TN□□1604□□	M3.5×13T	T15
E-PTXNR1216X33N	12	16	120	12	16			
E-PTXNR1616X33N	16	16	120	16	16			
E-PTXNR2020X33N	20	20	120	20	20			

钨钢车刀
TUNGSTEN STEEL TURNING TOOL

MTFN□

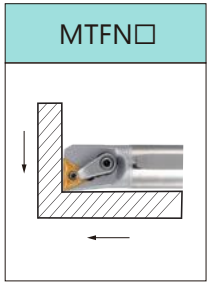

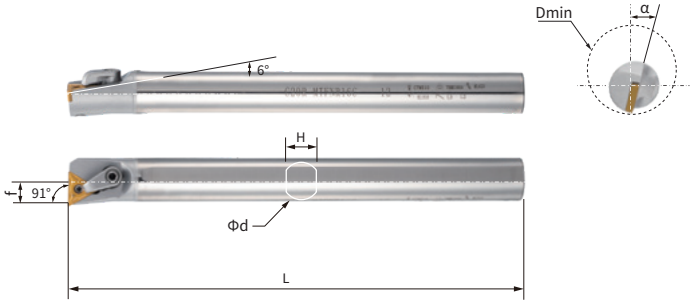

型号Model		尺寸Size (mm)						刀片 Blade	刀垫 Shim	中心销 Center Pin	扳手 Wrench	压板 Platen	双头螺栓 Double Screw	扳手 Wrench
左刀Left	右刀Right	Φ Dmin	Φd	L	H	f	α°							
C16Q-MTFNL16	C16Q-MTFNR16	20	16	180	14.8	10.5	17°	TN□□ 1604□□	×	CTM510	L2	HL1511	ML0520	L2.5
C20R-MTFNL16	C20R-MTFNR16	24	20	200	18.6	12	15°		×	CTM510	L2	HL1810	ML0620	L3
C25S-MTFNL16	C25S-MTFNR16	29	25	250	23	14.5	15°							
C32T-MTFNL16	C32T-MTFNR16	36	32	300	30	18	15°		MT1603	CTM513	L2	HL1813	ML0625	L3
C40T-MTFNL16	C40T-MTFNR16	48	40	300	37	26	15°							

MTUN□

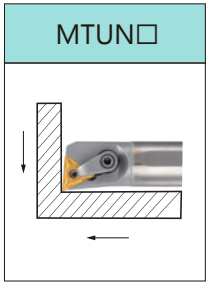

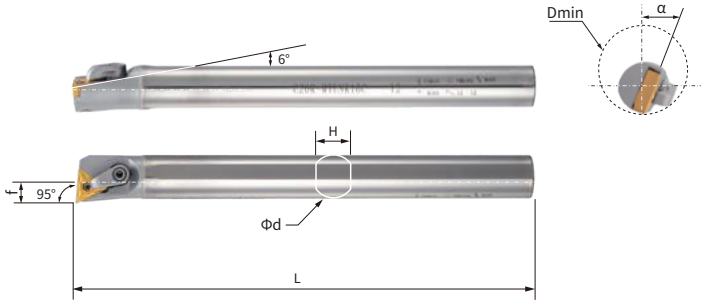

型号Model		尺寸Size (mm)						刀片 Blade	刀垫 Shim	中心销 Center Pin	扳手 Wrench	压板 Platen	双头螺栓 Double Screw	扳手 Wrench
左刀Left	右刀Right	Φ Dmin	Φd	L	H	f	α°							
C16Q-MTUNL16	C16Q-MTUNR16	21	16	180	14.8	10.5	17°	TN□□ 1604□□	×	CTM510	L2	HL1511	ML0520	L2.5
C20R-MTUNL16	C20R-MTUNR16	24	20	200	18.6	12	15°		×	CTM510	L2	HL1810	ML0620	L3
C25S-MTUNL16	C25S-MTUNR16	29	25	250	23	14.5	15°							
C32T-MTUNL16	C32T-MTUNR16	36	32	300	30	18	15°		MT1603	CTM513	L2	HL1813	ML0625	L3
C40T-MTUNL16	C40T-MTUNR16	48	40	300	37	26	15°							
C25S-MTUNL22	C25S-MTUNR22	31	25	250	23	17	15°	TN□□ 2204□□	×	CTM613	L3	HL2217	ML0830	L4
C32T-MTUNL22	C32T-MTUNR22	40	32	300	30	22	17°		MT2204	CTM617				

MWLN□

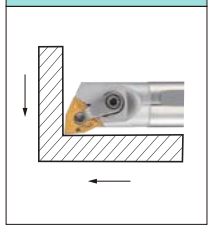

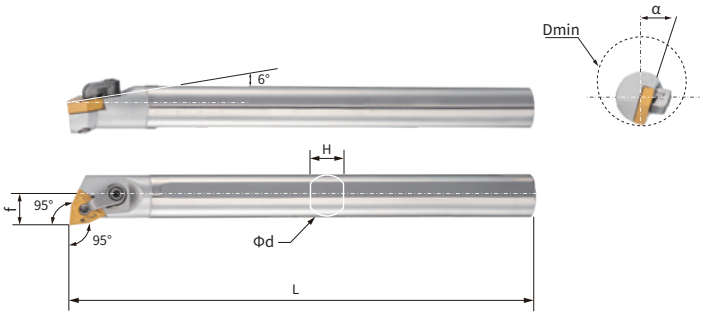

型号Model		尺寸Size (mm)						刀片 Blade	刀垫 Shim	中心销 Center Pin	扳手 Wrench	压板 Platen	双头螺栓 Double Screw	扳手 Wrench
左刀Left	右刀Right	Φ Dmin	Φd	L	H	f	α°							
C16Q-MWLNL06	C16Q-MWLNR06	19.5	16	180	14.8	10.5	16°	WN□□ 0604□□	×	510	L2	HL1511	ML0520	L2.5
C20R-MWLNL06	C20R-MWLNR06	23	20	200	18.6	12	15°					HL1810	ML0620	L3
C25S-MWLNL06	C25S-MWLNR06	29.5	25	250	23	16	12°							
C16Q-MWLNL08	C16Q-MWLNR08	19.5	16	180	14.8	10.5	17°	WN□□ 0804□□	×	613	L3	HL1511	ML0520	L2.5
C20R-MWLNL08	C20R-MWLNR08	24	20	200	18.6	13	15°					HL1810	ML0620	L3
C25S-MWLNL08	C25S-MWLNR08	31	25	250	23	16.5	12°							
C32T-MWLNL08	C32T-MWLNR08	39	32	300	30	21	15°		MW0804	617	L3	HL1813	ML0625	L3
C40T-MWLNL08	C40T-MWLNR08	47	40	300	37	25	12°							

MTWN□

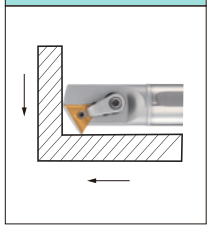

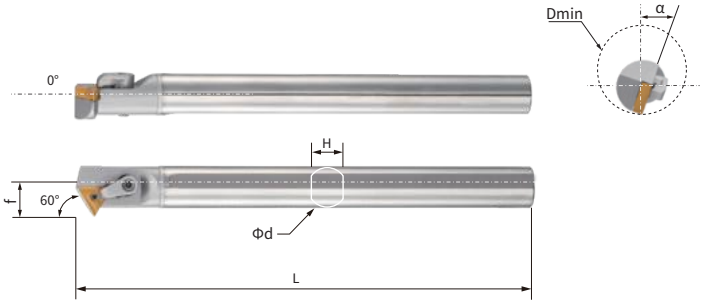

型号Model		尺寸Size (mm)						刀片 Blade	刀垫 Shim	中心销 Center Pin	扳手 Wrench	压板 Platen	双头螺栓 Double Screw	扳手 Wrench
左刀Left	右刀Right	Φ Dmin	Φd	L	H	f	α°							
C16Q-MTWNL16	C16Q-MTWNR16	22	16	180	14.8	12	17°	TN□□ 1604□□	×	CTM510	L2	HL1511	ML0520	L2.5
C20R-MTWNL16	C20R-MTWNR16	26	20	200	18.6	14	15°		×	CTM510	L2	HL1810	ML0620	L3
C25S-MTWNL16	C25S-MTWNR16	31	25	250	23	16.5	15°							
C32T-MTWNL16	C32T-MTWNR16	38	32	300	30	20.5	15°		MT1603	CTM513	L2	HL1813	ML0625	L3
C40T-MTWNL16	C40T-MTWNR16	26	40	300	37	24.5	15°							

SCKC□

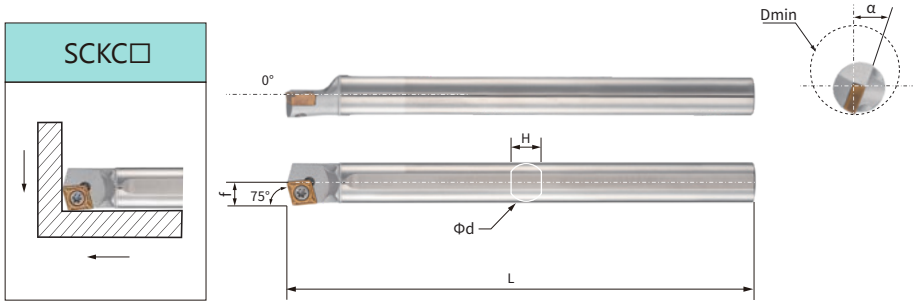

型号Model		尺寸Size (mm)						刀片 Blade	螺丝 Screw	扳手Wrench
左刀 Left	右刀 Right	Φ Dmin	Φd	L	H	f	α°			
C07K-SCKCL06	C07K-SCKCR06	9	7	125	6.2	4.5	15°	CC□□0602□□	M2.5×6	T8
C08K-SCKCL06	C08K-SCKCR06	10	8	125	7	4.6	12°			
C10K-SCKCL06	C10K-SCKCR06	12	10	125	9	5.6	12°			
C12M-SCKCL06	C12M-SCKCR06	14	12	150	11	7	10°			
C14N-SCKCL06	C14N-SCKCR06	16	14	160	13	8	10°			
C16Q-SCKCL06	C16Q-SCKCR06	18	16	180	14.8	9	10°			
C20R-SCKCL06	C20R-SCKCR06	23	20	200	18.6	11.5	8°			
C12M-SCKCL09	C12M-SCKCR09	14	12	150	11	7	12°	CC□□09T3□□	M4×8	T15
C14N-SCKCL09	C14N-SCKCR09	16	14	160	13	8	10°			
C16Q-SCKCL09	C16Q-SCKCR09	19	16	180	14.8	9.5	8°			
C18Q-SCKCL09	C18Q-SCKCR09	20	18	180	16.6	10	8°			
C20R-SCKCL09	C20R-SCKCR09	23	20	200	18.6	11.5	6°		M4×10	
C25S-SCKCL09	C25S-SCKCR09	28	25	250	23	14.5	6°			
C32T-SCKCL09	C32T-SCKCR09	37	32	300	30	20	4°			
C40T-SCKCL09	C40T-SCKCR09	45	40	300	37	24	4°			
C20R-SCKCL12	C20R-SCKCR12	23	20	200	18.6	12	6°	CC□□1204□□	M5×10	T20
C25S-SCKCL12	C25S-SCKCR12	28	25	250	23	14.5	6°		M5×12	
C32T-SCKCL12	C32T-SCKCR12	38	32	300	30	20	4°			

F

钨钢车刀

SCLC□

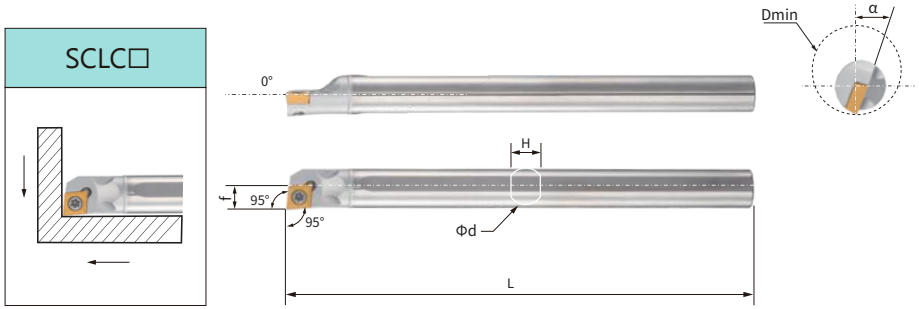

型号Model		尺寸Size (mm)						刀片 Blade	螺丝 Screw	扳手Wrench
左刀 Left	右刀 Right	Φ Dmin	Φd	L	H	f	α°			
C04H-SCLCL03	C04H-SCLCR03	5	4	100	3.7	2.5	20	CC□□0301□□	M1.6×4	T6
C05H-SCLCL03	C05H-SCLCR03	6	5	100	4.4	3	12			
C06K-SCLCL03	C06K-SCLCR03	7	6	125	5.2	3.5	12			
C05H-SCLCL04	C05H-SCLCR04	6	5	100	4.4	3	15	CC□□04T1□□	M2×4	T6
C06K-SCLCL04	C06K-SCLCR04	7	6	125	5.2	3.5	12			
C07K-SCLCL04	C07K-SCLCR04	8	7	125	6.2	4	12			
C08K-SCLCL04	C08K-SCLCR04	9	8	125	7	4.5	6			
C10K-SCLCL04	C10K-SCLCR04	11	10	125	9	5.5	6			
C06K-SCLCL06	C06K-SCLCR06	9	6	125	5.2	4.5	15	CC□□0602□□	M2.5×6	T8
C07K-SCLCL06	C07K-SCLCR06	9	7	125	6.2	4.5	15			
C08K-SCLCL06	C08K-SCLCR06	10	8	125	7	4.6	12			
C10K-SCLCL06	C10K-SCLCR06	12	10	125	9	5.6	12			
C12M-SCLCL06	C12M-SCLCR06	14	12	150	11	7	10			
C14N-SCLCL06	C14N-SCLCR06	16	14	160	13	8	10			
C16Q-SCLCL06	C16Q-SCLCR06	18	16	180	14.8	9	8			
C20R-SCLCL06	C20R-SCLCR06	23	20	200	18.6	11.5	6			
C08K-SCLCL09	C08K-SCLCR09	13	8	125	7	7.5	15	CC□□09T3□□	M4×6	T15
C10K-SCLCL09	C10K-SCLCR09	13	10	125	9	7	15			
C12M-SCLCL09	C12M-SCLCR09	14	12	150	11	7	12		M4×8	
C14N-SCLCL09	C14N-SCLCR09	16	14	160	13	8.2	10			
C16Q-SCLCL09	C16Q-SCLCR09	18	16	180	14.8	9	8			
C18Q-SCLCL09	C18Q-SCLCR09	20	18	180	16.6	10	6			
C20R-SCLCL09	C20R-SCLCR09	23	20	200	18.6	11.5	6			
C25S-SCLCL09	C25S-SCLCR09	29	25	250	23	14.5	6		M4×10	
C32T-SCLCL09	C32T-SCLCR09	38	32	300	30	20	4			
C40T-SCLCL09	C40T-SCLCR09	46	40	300	37	24	4			
C20R-SCLCL12	C20R-SCLCR12	24	20	200	18.6	12	10	CC□□1204□□	M5×10	T20
C25S-SCLCL12	C25S-SCLCR12	29	25	250	23	14.5	6		M5×12	
C32T-SCLCL12	C32T-SCLCR12	38	32	300	30	20	4			
C40T-SCLCL12	C40T-SCLCR12	46	40	300	37	24	4			

F

钨钢车刀

SDQC□

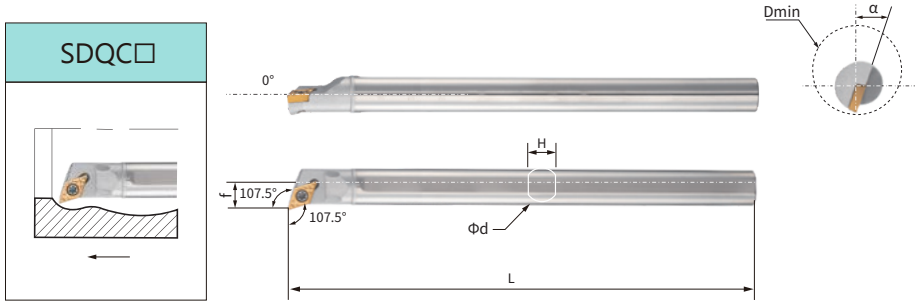

型号Model		尺寸Size (mm)						刀片 Blade	螺丝 Screw	扳手Wrench
左刀 Left	右刀 Right	Φ Dmin	Φd	L	H	f	α°			
C08K-SDQCL07	C08K-SDQCR07	12	8	125	7	7	15°	DC□□0702□□	M2.5×6	T8
C10K-SDQCL07	C10K-SDQCR07	13	10	125	9	7	10°			
C12M-SDQCL07	C12M-SDQCR07	14.5	12	150	11	7.5	10°			
C16Q-SDQCL07	C16Q-SDQCR07	19	16	180	14.8	10	6°			
C20R-SDQCL11	C20R-SDQCR11	24	20	200	18.6	13	6°	DC□□11T3□□	M4×10	T15
C25S-SDQCL11	C25S-SDQCR11	30	25	250	23	16	6°			
C32T-SDQCL11	C32T-SDQCR11	38	32	300	30	20	4°			
C40T-SDQCL11	C40T-SDQCR11	47	40	300	37	25	4°			

F

钨钢车刀

SDUC□

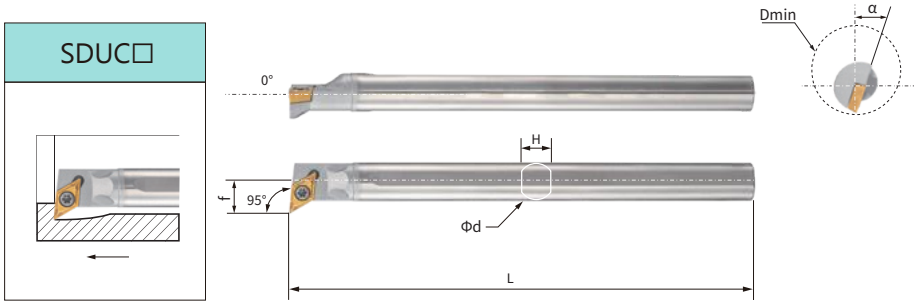

型号Model		尺寸Size (mm)						刀片 Blade	螺丝 Screw	扳手Wrench
左刀 Left	右刀 Right	Φ Dmin	Φd	L	H	f	α°			
C08K-SDUCL07	C08K-SDUCR07	13	8	125	7	8	12°	DC□□0702□□	M2.5×6	T8
C10K-SDUCL07	C10K-SDUCR07	13.2	10	125	9	7.2	10°			
C12M-SDUCL07	C12M-SDUCR07	16	12	150	11	9	10°			
C16Q-SDUCL07	C16Q-SDUCR07	20.5	16	180	14.8	11.5	8°			
C16Q-SDUCL11	C16Q-SDUCR11	22	16	180	14.8	13	8°	DC□□11T3□□	M4×8	T15
C20R-SDUCL11	C20R-SDUCR11	25	20	200	18.6	14	6°		M4×10	
C25S-SDUCL11	C25S-SDUCR11	32	25	250	23	17.5	4°			
C32T-SDUCL11	C32T-SDUCR11	39	32	300	30	21	4°			
C40T-SDUCL11	C40T-SDUCR11	47	40	300	37	25	4°			

F

钨钢车刀

STF□□

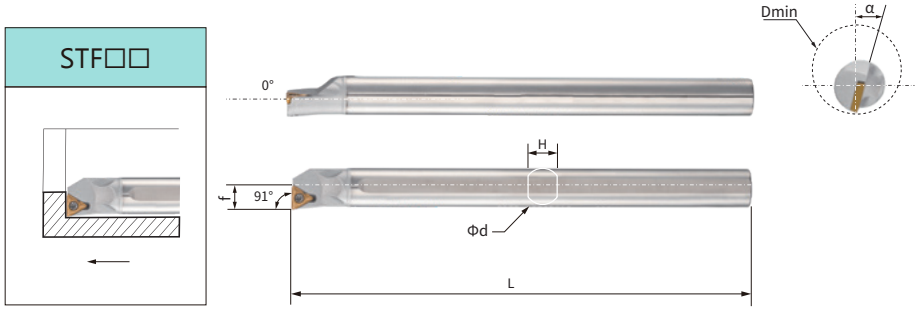

型号Model		尺寸Size (mm)							刀片 Blade	螺丝 Screw	刀片 Blade	螺丝 Screw	扳手 Wrench
左刀 Left	右刀 Right	Φ Dmin	Φd	L	H	f	α° C	α° P					
C08K-STF□L09	C08K-STF□R09	10	8	125	7	5	12°	10°	TC□□ 0902□□	M2.5×5	TP□□ 0902□□	M2.5×5	T8
C10K-STF□L09	C10K-STF□R09	12	10	125	9	6	10°	6°		M2.5×6		M2.5×6	
C12M-STF□L09	C12M-STF□R09	14	12	150	11	7	8°	6°					
C14N-STF□L09	C14N-STF□R09	16	14	160	13	8	4°	4°					
C10K-STF□L11	C10K-STF□R11	12	10	125	9	6	10°	10°	TC□□ 1102□□	M2.5×6	TP□□ 1103□□	M3×6	T8
C12M-STF□L11	C12M-STF□R11	14	12	150	11	7	10°	8°					
C14N-STF□L11	C14N-STF□R11	16	14	160	13	8	6°	4°					
C16Q-STF□L11	C16Q-STF□R11	19	16	180	14.8	9.5	6°	4°					
C18Q-STF□L11	C18Q-STF□R11	21	18	180	16.6	10.5	4°	4°					
C20R-STF□L11	C20R-STF□R11	23	20	200	18.6	11.5	4°	4°				M3×8	
C25S-STF□L11	C25S-STF□R11	29	25	250	23	14	4°	2°					
C32T-STF□L11	C32T-STF□R11	36	32	300	30	18	2°	2°					
C40T-STF□L11	C40T-STF□R11	46	40	300	37	24	2°	2°					
C16Q-STFCL16	C16Q-STFCR16	19	16	180	14.8	9.5	6°		TC□□ 16T3□□	M4×8	×	×	T15
C18Q-STFCL16	C18Q-STFCR16	21	18	180	16.6	10.5	6°						
C20R-STFCL16	C20R-STFCR16	23	20	200	18.6	11.5	6°			M4×10			
C25S-STFCL16	C25S-STFCR16	29	25	250	23	14	4°						
C32T-STFCL16	C32T-STFCR16	38	32	300	30	20	4°						
C40T-STFCL16	C40T-STFCR16	46	40	300	37	24	2°						

STU□□

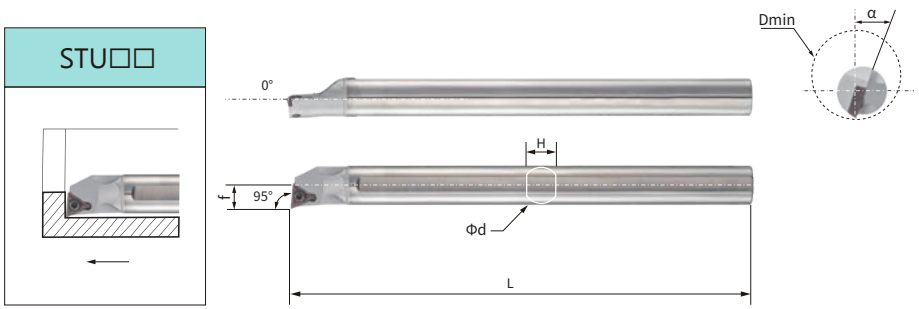

型号Model		尺寸Size (mm)							刀片 Blade	螺丝 Screw	刀片 Blade	螺丝 Screw	扳手 Wrench
左刀 Left	右刀 Right	Φ Dmin	Φd	L	H	f	α° C	α° P					
C08K-STU□L09	C08K-STU□R09	10	8	125	7	5	12°	10°	TC□□ 0902□□	M2.5×5	TP□□ 0902□□	M2.5×5	T8
C10K-STU□L09	C10K-STU□R09	12	10	125	9	6	10°	6°		M2.5×6		M2.5×6	
C12M-STU□L09	C12M-STU□R09	14	12	150	11	7	8°	6°					
C14N-STU□L09	C14N-STU□R09	16	14	160	13	8	4°	4°					
C10K-STU□L11	C10K-STU□R11	12	10	125	9	6	10°	10°	TC□□ 1102□□	M2.5×6	TP□□ 1103□□	M3×6	T8
C12M-STU□L11	C12M-STU□R11	14	12	150	11	7	10°	8°					
C14N-STU□L11	C14N-STU□R11	16	14	160	13	8	6°	4°					
C16Q-STU□L11	C16Q-STU□R11	19	16	180	14.8	9.5	6°	4°					
C18Q-STU□L11	C18Q-STU□R11	21	18	180	16.6	10.5	4°	4°					
C20R-STU□L11	C20R-STU□R11	23	20	200	18.6	11.5	4°	4°				M3×8	
C25S-STU□L11	C25S-STU□R11	29	25	250	23	14	4°	2°					
C32T-STU□L11	C32T-STU□R11	36	32	300	30	18	2°	2°					
C40T-STU□L11	C40T-STU□R11	46	40	300	37	24	2°	2°					
C16Q-STUCL16	C16Q-STUCR16	19	16	180	14.8	9.5	6°		TC□□ 16T3□□	M4×8	×	×	T15
C18Q-STUCL16	C18Q-STUCR16	21	18	180	16.6	10.5	6°						
C20R-STUCL16	C20R-STUCR16	23	20	200	18.6	11.5	6°			M4×10			
C25S-STUCL16	C25S-STUCR16	29	25	250	23	14	4°						
C32T-STUCL16	C32T-STUCR16	38	32	300	30	20	4°						
C40T-STUCL16	C40T-STUCR16	46	40	300	37	24	2°						

SVJ□□

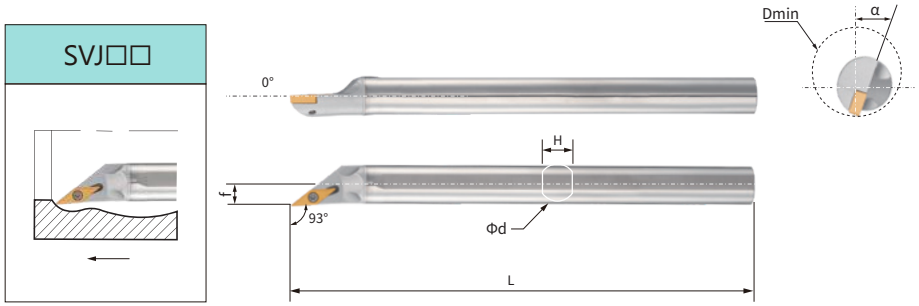

型号Model		尺寸Size (mm)						刀片 Blade	螺丝 Screw	扳手Wrench
左刀 Left	右刀 Right	Φ Dmin	Φd	L	H	f	α° (B/C)			
C08K-SVJ□L08	C08K-SVJ□R08	10	8	125	7	5	10°	VC□□0802□□	M2×5	T6
C10K-SVJ□L11	C10K-SVJ□R11	12	10	125	9	6	12°	VC□□1103□□ VB□□1103□□	M2.5×6	T8
C12M-SVJ□L11	C12M-SVJ□R11	14	12	150	11	7	10°			
C14N-SVJ□L11	C14N-SVJ□R11	16	14	160	13	8	6°			
C16Q-SVJ□L11	C16Q-SVJ□R11	18	16	180	14.8	9	6°			
C18Q-SVJ□L11	C18Q-SVJ□R11	21	18	180	16.6	10.5	6°			
C20R-SVJ□L11	C20R-SVJ□R11	24	20	200	18.6	11.5	6°			
C25S-SVJ□L11	C25S-SVJ□R11	30	25	250	23	14	4°			
C16Q-SVJ□L16	C16Q-SVJ□R16	19	16	180	14.8	9.5	6°	VC□□1604□□ VB□□1604□□	M3.5×9	T15
C20R-SVJ□L16	C20R-SVJ□R16	23	20	200	18.6	11.5	6°		M4×10	
C25S-SVJ□L16	C25S-SVJ□R16	30	25	250	23	14.5	4°			
C32T-SVJ□L16	C32T-SVJ□R16	39	32	300	30	20	2°			
C40T-SVJ□L16	C40T-SVJ□R16	48	40	300	37	24	2°			

F 钨钢车刀

SVX□□

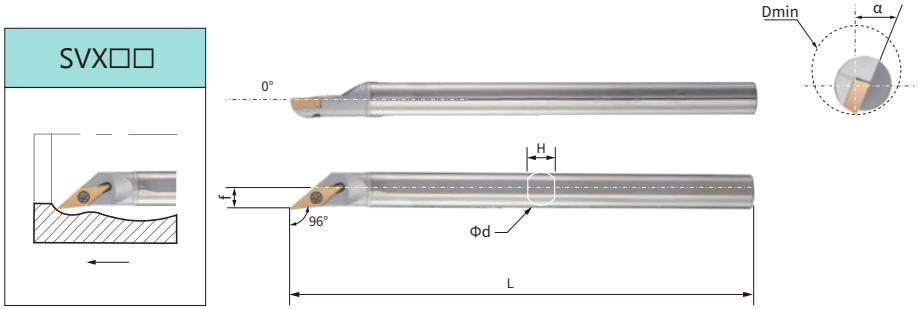

型号Model		尺寸Size (mm)						刀片 Blade	螺丝 Screw	扳手Wrench
左刀 Left	右刀 Right	Φ Dmin	Φd	L	H	f	α° (B/C)			
C08K-SVX□L08	C08K-SVX□R08	10	8	125	7	5	10°	VC□□0802□□	M2×5	T6
C10K-SVX□L11	C10K-SVX□R11	12.5	10	125	9	6.5	12°	VC□□1103□□ VB□□1103□□	M2.5×6	T8
C12M-SVX□L11	C12M-SVX□R11	14	12	150	11	7	8°			
C14N-SVX□L11	C14N-SVX□R11	16.5	14	160	13	8.5	6°			
C16Q-SVX□L11	C16Q-SVX□R11	18.5	16	180	14.8	9.5	6°			
C20R-SVX□L11	C20R-SVX□R11	23	20	200	18.6	12	6°			
C25S-SVX□L11	C25S-SVX□R11	29	25	250	23	14.5	4°			
C16Q-SVX□L16	C16Q-SVX□R16	18.5	16	180	14.8	9.5	6°	VC□□1604□□ VB□□1604□□	M3.5×9	T15
C20R-SVX□L16	C20R-SVX□R16	23	20	200	18.6	12	6°		M4×10	
C25S-SVX□L16	C25S-SVX□R16	29	25	250	23	14.5	4°			
C32T-SVX□L16	C32T-SVX□R16	38	32	300	30	20	2°			
C40T-SVX□L16	C40T-SVX□R16	46	40	300	37	24	2°			

F 钨钢车刀

车刀配件

TURNING TOOL ACCESSORIES

>>>

- 合金刀垫·配件
  ALLOY SHIM ACCESSORIES
- 螺丝·配件
  SCREWS AND ACCESSORIES
- 压板·配件
  PRESSING PLATE AND ACCESSORIES
- 扳手·配件
  WRENCH AND ACCESSORIES

合金刀垫·配件

ALLOY SHIM ACCESSORIES

C型刀垫

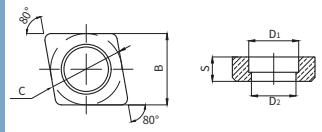

型号Model	尺寸Size (mm)				
	C	S	B	D1	D2
MC0903	9.3	3.18	9.3	6.5	5.8
MC1204	12.5	4.76	12.5	8.05	7.35
MC1604	15.55	4.76	15.55	11.35	9.65
MC1904	18.8	4.76	18.8	12.85	11.25

D型刀垫

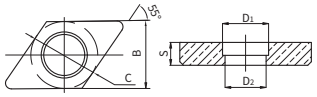

型号Model	尺寸Size (mm)				
	C	S	B	D1	D2
MD1103	9.3	3.18	9.3	6.6	5.8
MD1504	12.5	4.76	12.5	8	7.3
MD1506	12.5	6.35	12.5	8	7.3

S型刀垫

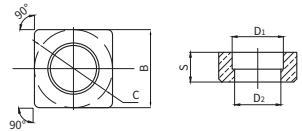

型号Model	尺寸Size (mm)				
	C	S	B	D1	D2
MS0903	9.3	3.18	9.3	6.5	5.8
MS1204	12.5	4.76	12.5	8.05	7.35
MS1504	15.55	4.76	15.55	11.35	9.65
MS1904	18.8	4.76	18.8	12.35	11.25

T型刀垫

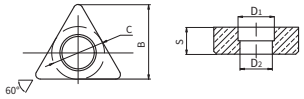

型号Model	尺寸Size (mm)				
	C	S	B	D1	D2
MT1603	9.2	3.18	13.15	6.6	5.8
MT1604	9.2	4.76	13.15	6.6	5.8
MT2204	12.5	4.76	17.95	8.05	7.35

V型刀垫

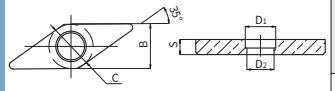

型号Model	尺寸Size (mm)				
	C	S	B	D1	D2
MV1603	9.2	3.18	9.2	6.4	5.7

G
车刀配件

W型刀垫

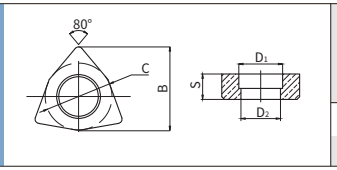

型号Model	尺寸Size (mm)				
	C	S	B	D_1	D_2
MW0603	9.3	3.18	11.61	6.4	5.17
MW0804	12.5	4.76	15.63	8.0	7.3

螺纹刀垫

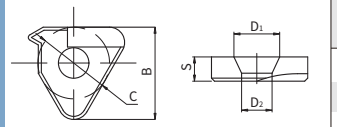

型号Model	尺寸Size (mm)				
	C	S	B	D_1	D_2
STM16	9.4	3.18	12.1	4.9	4.1
MTM16	9.4	3.18	12.1	6	4
MTM22R/L	12.55	4.07	17.03	7.64	5.25
MTM27R/L	15.5	4.76	21.25	9	6.1

螺丝·配件

SCREWS AND ACCESSORIES

螺丝·配件
SCREWS AND ACCESSORIES

梅花螺丝

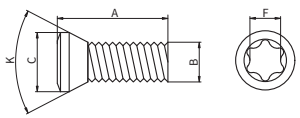

型号Model	尺寸Size (mm)				
	A	B	C	D	F
M1.6×4	4	M1.6×0.35	2.5	60	T6
M2×4	4	M2×0.4	2.8	60	
M2×5	5		2.8		
M2×6	6		2.8		
M2.2×5	5	M2.2×0.45	3.0	55	
M2.2×6	6		3.0		
M2.5×5	5	M2.5×0.45	3.5	55	T8
M2.5×6	6		3.5		
M2.5×8	8		3.5		
M2.5×10	10		3.5		
M3×6	6	M3×0.5	4.2	50	
M3×8	8		4.2		
M3×10	10		4.2		
M3×12	12		4.2		
M3.5×8	8	M3.5×0.6	5.3	60	T15
M3.5×9	9		5.3		
M3.5×10	10		5.3		
M3.5×12	12		5.3		
M4×8	8	M4×0.7	5.7	60	
M4×10	10		5.7		
M4×12	12		6.5		
M4×14	14		6.5		
M4×16	16		6.5		
M4.5×12	12	M4.5×0.75	6.5	55	
M4.5×15	15		6.5		
M5×8	8	M5×0.8	7.0	60	T20
M5×10	10		7.0		
M5×12	12		7.0		
M5×14	14		7.0		
M5×15	15		7.0		
M5×18	18		7.0		
M5×20	20		7.0		
M5×21	21		7.0		
M6×16	16	M6×1.0	8.5	60	T25
M6×18	18		8.5		
M6×20	20		8.5		

中心销钉

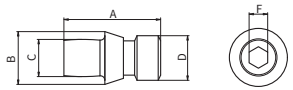

型号Model	尺寸Size (mm)				
	A	B	C	D	F
CTM510	10.5	5.5	3.45	M5×0.8	L2
CTM613	13	7.1	5	M6×1.0	L3

中心销钉

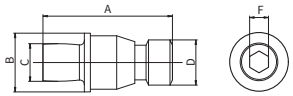

型号Model	尺寸Size (mm)				
	A	B	C	D	F
CTM513	13.9	6.25	3.7	M5×0.8	L2
CTM617	17.2	7.8	5	M6×1.0	L3
CTM619	17.7	7.8	5	M6×1.0	L3
CTM0822	22.1	10.3	6.25	M8×1.25	L3
CTM1022	22.1	11.9	7.8	M10×1.5	L4

中心销钉

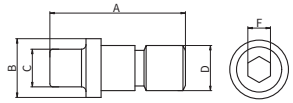

型号Model	尺寸Size (mm)				
	A	B	C	D	F
CTM515-T	15.6	6.2	3.6	M5×0.8	L2.5
CTM618-W	18	7.7	5	M6×1.0	L3

槽刀螺丝

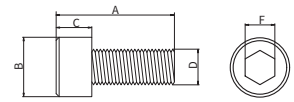

型号Model	尺寸Size (mm)				
	A	B	C	D	F
M4×10	10	7	4	M4×0.7	L3
M4×12	12	7	4	M4×0.7	L3
M5×12	12	8.5	5	M5×0.8	L4
M5×16	16	8.5	5	M5×0.8	L4
M6×14	14	10	6	M6×1.0	L5
M6×16	16	10	6	M6×1.0	L5
M6×18	18	10	6	M6×1.0	L5
M8×20	20	12.5	8	M8×1.25	L6

G
车刀配件

双头螺栓

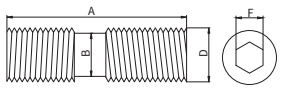

型号Model	尺寸Size (mm)				
	A	B	C	D	F
ML0515	15	3.9	/	M5×0.8	L2.5
ML0516	16	3.9	/	M5×0.8	L2.5
ML0518	18	3.9	/	M5×0.8	L2.5
ML0520	20	3.9	/	M5×0.8	L2.5
ML0525	25	3.9	/	M5×0.8	L2.5
ML0615	15	4.8	/	M6×1.0	L3
ML0620	20	4.8	/	M6×1.0	L3
ML0625	25	4.8	/	M6×1.0	L3
ML0630	30	4.8	/	M6×1.0	L3
ML0830	25	6	/	M8×1.25	L4

侧钉

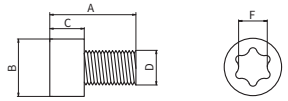

型号Model	尺寸Size (mm)				
	A	B	C	D	F
M3×8C	8	6.3	2.8	M3×0.5	T15

压板螺丝

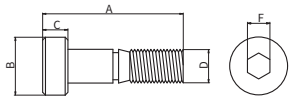

型号Model	尺寸Size (mm)				
	A	B	C	D	F
M5×25	25	9	4.5	M5×0.8	L4
M6×25	25	10.3	4.9	M6×1.0	L4

螺丝

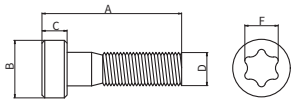

型号Model	尺寸Size (mm)				
	A	B	C	D	F
M3.5×13.5T	13.5	6	2.3	M3.5×0.6	T15
M4.5×14W	14	8	2.3	M4.5×0.75	T20

G
车刀配件

D型压板螺丝

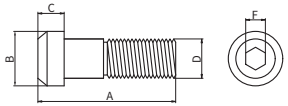

型号Model	尺寸Size (mm)				
	A	B	C	D	F
M5×25	21	8.3	4.3	M5×0.8	L3
M6×25	21	8.3	4.3	M6×1.0	L3

D型刀垫螺丝

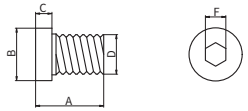

型号Model	尺寸Size (mm)				
	A	B	C	D	F
D5×9	9	6.2	2	M5×0.8	L3
D6×10	10	7.7	2.4	M6×1.0	L3

G
车刀配件

压板·配件

APRESSING PLATE AND ACCESSORIES

M型压板

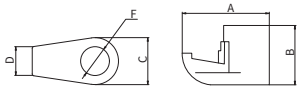

型号Model	尺寸Size (mm)				
	A	B	C	D	F
HL1511	15	11	7.8	4	M5
HL1810	18	10	9.5	6	M6
HL1813	18	13	9.5	6	M6
HL2113	21	14	9.5	6	M6
HL2413	24	14	9.5	6	M6
HL1917	19	17	11	6	M8
HL2217	22	17	11	6	M8

W型压板

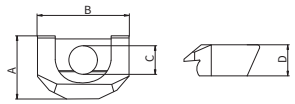

型号Model	尺寸Size (mm)				
	A	B	C	D	F
T-16	16.5	18.5	6.3	7.5	/
T-22	18.5	21.8	8.2	9.3	/
W-08	16.5	18.8	6	8.8	/

D型压板

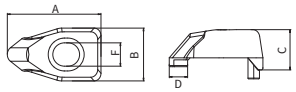

型号Model	尺寸Size (mm)				
	A	B	C	D	F
D3220	22	12.5	10.5	3	6.3
D3310	31	12.5	10.5	3	6.3
D5240	24	13.5	11.5	5	6.3
D5270	27	13.5	10	5	6.3

扬手·配件

WRENCH AND ACCESSORIES

旗型梅花扳手

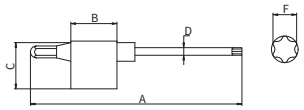

型号Model	尺寸Size (mm)				
	A	B	C	D	F
T6	70	18.5	18.5	1.7	T6
T7	70	18.5	18.5	2.3	T7
T8	72	18.5	18.5	2.3	T8
T10	78	18.5	19.5	2.7	T10
T15	82	20	26	3.2	T15
T20	82	20	28	3.8	T20
T25	91	19	23	4.2	T25

十字梅花扳手

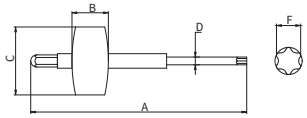

型号Model	尺寸Size (mm)				
	A	B	C	D	F
T6	60	9	18	1.7	T6
T8	70	13	28	2.3	T8
T15	89	13	28	3.2	T15

内六角扳手

型号Model	尺寸Size (mm)				
	A	B	C	D	F
L2	56	19	/	/	2.0
L2.5	65	20	/	/	2.5
L3	65	22	/	/	3.0
L4	72	26	/	/	4.0
L5	79	29	/	/	5.0
L6	82	31	/	/	6.0

切槽刀板扳手

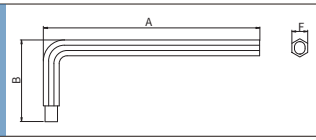

型号Model	尺寸Size (mm)				
	A	B	C	D	F
L5-K	100	30	/	/	5.0

G

车刀配件

机床附件
MACHINE TOOL ACCESSORIES

莫式侧固刀柄

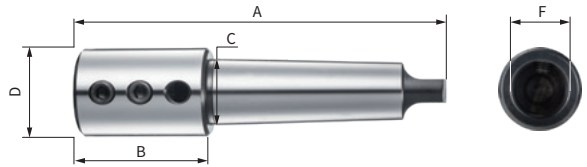

型号Model	尺寸Size (mm)				
	A	B	C	D	F
MTA3-SLN20	169	70	24	41	20
MTA3-SLN25	174	75	24	47	25
MTA3-SLN32	174	75	24	47	32
MTA3-SLN40	185	86	24	59	40
MTA4-SLN20	189	65	32	44	20
MTA4-SLN25	194	70	32	44	25
MTA4-SLN32	195	71	32	47	32
MTA4-SLN40	210	86	32	59	40
MTA5-SLN20	225	63	45	41	20
MTA5-SLN25	229	74	45	45	25
MTA5-SLN32	229	74	45	47	32
MTA5-SLN40	225	89	45	59	40

拉钉

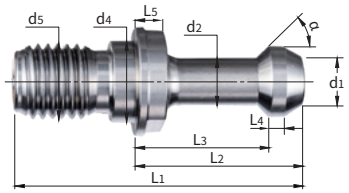

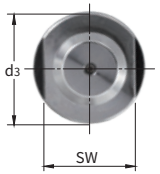

型号Model	尺寸Size (mm)											
	d_1	d_2	d_3	d_4	d_5	L_1	L_2	L_3	L_4	L_5	SW	α
BT30-45°	11	7	16.5	12.5	M12	43	23	18	2.5	5	13	45°
BT30-60°	11	7	16.5	12.5	M12	43	23	18	2.5	5	13	60°
BT30-90°	11	7	16.5	12.5	M12	43	23	18	2.5	5	13	90°
BT40-45°	15	10	23	17	M16	60	35	28	3	6	19	45°
BT40-60°	15	10	23	17	M16	60	35	28	3	6	19	60°
BT40-90°	15	10	23	17	M16	60	35	28	3	6	19	90°
BT50-45°	23	17	38	25	M24	85	45	35	5	10	30	45°
BT50-60°	23	17	38	25	M24	85	45	35	5	10	30	60°
BT50-90°	23	17	38	25	M24	85	45	35	5	10	30	90°

机床附件
MACHINE TOOL ACCESSORIES

车床刀架垫片

型号Model	尺寸Size (mm)				
	A	B	C	D	F
0.5	90	21.5	0.5	/	/
1.0	90	21.5	1.0	/	/
2.0	90	21.5	2.0	/	/
3.0	90	21.5	3.0	/	/
4.0	90	21.5	4.0	/	/

H
机床附件

SMBB□

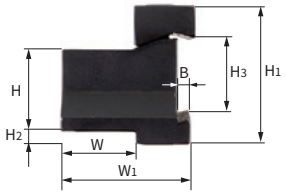

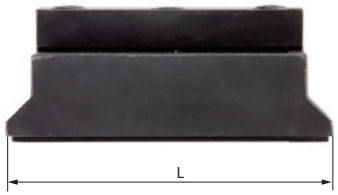

型号Model	尺寸Size (mm)								切刀板 Cutter board		螺丝 Screw	扳手 Wrench
	H	W	B	H_1	H_2	H_3	W_1	L				
SMBB1626	16	16	5.3	43	13	26	38	86	SPB□□	SMGB□□	M6×14	L5
SMBB2026	20	20	5.3	43	9	26	38	86				
SMBB2032	20	20	5.3	50	14	32	39	100				
SMBB2526	25	23	5.3	43	3.5	26	40	100				
SMBB2532	25	23	5.3	50	9	32	42	110				
SMBB3232	32	30	5.3	54	5	32	48	110				

方型刀套

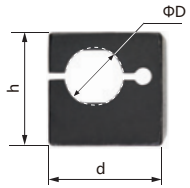

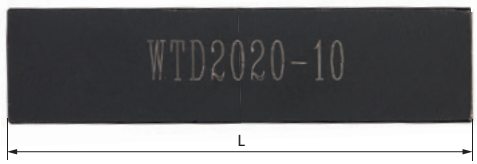

型号Model	尺寸Size (mm)			
	ΦD	h	d	L
1616-04	4	16	16	80
1616-05	5			
1616-06	6			
1616-07	7			
1616-08	8			
1616-10	10			
1616-12	12			
2016-04	4	20	16	80
2016-05	5			
2016-06	6			
2016-07	7			
2016-08	8			
2016-10	10			
2016-12	12			
2020-04	4	20	20	80
2020-05	5			
2020-06	6			
2020-07	7			
2020-08	8			
2020-10	10			
2020-12	12			
2020-14	14			
2020-16	16			
2525-04	4	25	25	80
2525-05	5			
2525-06	6			
2525-07	7			
2525-08	8			
2525-10	10			
2525-12	12			
2525-14	14			
2525-16	16			
2525-18	18			
2525-20	20			

锥柄圆刀套

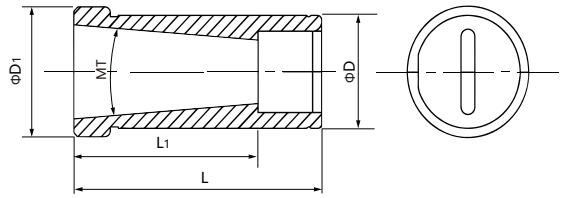

型号Model	尺寸Size (mm)				
	ΦD	ΦD1	MT	L	L1
D25-MT1	30.5	30.5	MT1	60	49
D25-MT2	30.5	30.5	MT2	70.8	60.8
D25-MT3	30.5	30.5	MT3	91.4	48.9
D32-MT1	36	36	MT1	62.8	53
D32-MT2	36	36	MT2	71.4	59.3
D32-MT3	36	36	MT3	90.8	77.7
D32-MT4	36	36	MT4	111.5	76
D40-MT1	46	46	MT1	63	52.5
D40-MT2	46	46	MT2	70.3	57.8
D40-MT3	46	46	MT3	91.5	79
D40-MT4	46	46	MT4	111	98.5

H

机床附件

圆型刀套

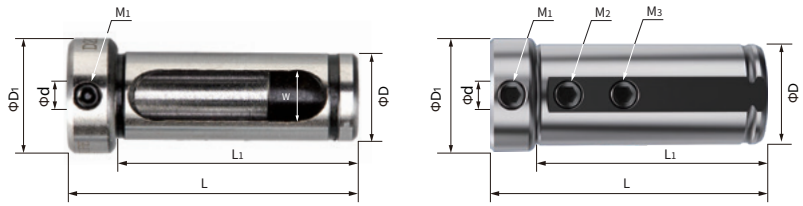

型号Model	尺寸Size (mm)									
	ΦD	ΦD1	Φd	L	L1	W	M1	M2	M3	扳手 Wrench
D40-6	40	46	6	95	80	/	M6×8	M6×6	/	L3
D40-7			7			/	M6×10	M6×8	/	
D40-8			8			/	M8×16	M8×12	/	L4
D40-10			10			/	M8×16	M8×12	/	
D40-12			12			/	M8×16	M8×12	/	
D40-13			13			/	M8×16	M8×10	/	
D40-14			14			/	M8×16	M8×10	/	
D40-16			16			/	M8×12	M8×10	/	
D40-18			18			/	M8×12	M8×10	M8×10	
D40-20			20			/	M8×12	M8×6	M8×6	
D40-25			25			13.5	M8×10	/	/	
D40-32			32			13.5	M8×6	/	/	
D32-4	32	36	4	85	71	/	M5×10	M5×6	/	L2.5
D32-5			5			/	M5×10	M5×6	/	
D32-6			6			/	M6×12	M6×10	/	L3
D32-7			7			/	M8×12	M8×10	/	L4
D32-8			8			/	M8×12	M8×10	/	
D32-10			10			/	M8×12	M8×10		
D32-12			12			/	M8×12	M8×8	/	
D32-13			13			/	M8×10	M8×8	/	
D32-14			14			/	M8×10	M8×8	/	
D32-16			16			/	M8×10	M8×8	M8×8	
D32-18			18			13.5	M8	/	/	
D32-20			20			13.5	M8	/	/	
D32-25			25			13.5	M8	/	/	

H

机床附件

型号Model	尺寸Size (mm)									
	ΦD	ΦD1	Φd	L	L1	W	M1	M2	M3	扳手 Wrench
D25-4	25	31	4	70	58	/	M5×10	M5×6	/	L2.5
D25-5			5			/	M5×10	M5×6	/	
D25-6			6			/	M6×10	M6×8	/	L3
D25-7			7			/	M6×10	M6×8	/	
D25-8			8			/	M6×10	M6×6	/	
D25-10			10			/	M6×10	M6×6	/	
D25-12			12			/	M6×8	M6×6	/	
D25-13			13			/	M6×8	M6×5	M6×5	
D25-14			14			12	M6×6	/	/	
D25-16			16			12	M6×6	/	/	
D25-18			18			12	M6×5	/	/	
D25-20			20			12	M6×5	/	/	
D20-4	20	26	4	65	53	/	M5×10	M5×6	/	L2.5
D20-5			5			/	M5×10	M5×6	/	
D20-6			6			/	M6×8	M6×6	/	L3
D20-7			7			/	M6×8	M6×5	/	
D20-8			8			/	M6×8	M6×5	/	
D20-9			9			/	M6×8	M6×5	/	
D20-10			10			/	M6×8	M6×5	/	
D20-12			12			11	M6×6	/	/	
D20-13			13			11	M6×5	/	/	
D20-14			14			11	M6×5	/	/	
D20-16			16			11	M6×5	/	/	

H

机床附件

SHB 20-3

型号Model	尺寸Size (mm)								
	ΦD	ΦD1	Φd	L	L1	M1	M2	M3	扳手 Wrench
SHB12-3	12	11	3	80	68	M4×3	M4×3	/	L2
SHB12-4			4			M4×4	M4×4	/	
SHB12-5			5			M4×4	M4×4	/	
SHB12-6			6			M4×4	M4×4	M4×4	
SHB16-3	16	15	3	100	80	M4×5	M4×5	M4×5	
SHB16-4			4			M4×5	M4×5	M4×5	
SHB16-5			5			M4×5	M4×5	M4×5	
SHB16-6			6			M4×4	M4×4	M4×4	
SHB16-7			7			M4×4	M4×4	M4×4	
SHB16-8			8			M4×3	M4×3	M4×3	
SHB16-10			10			M4×3	M4×3	M4×3	
SHB20-3	20	19	3	100	79	M4×5	M4×5	/	
SHB20-4			4			M4×5	M4×5	/	
SHB20-5			5			M4×5	M4×5	M4×5	
SHB20-6			6			M4×5	M4×5	M4×5	
SHB20-7			7			M4×5	M4×5	M4×5	
SHB20-8			8			M4×5	M4×5	M4×5	
SHB20-10			10			M4×4	M4×4	M4×4	
SHB20-12			12			M4×3	M4×3	M4×3	

H

机床附件