REVEN

Tools & Carbide

CNC TOOL HOLDER

REVEN

Tools & Carbide

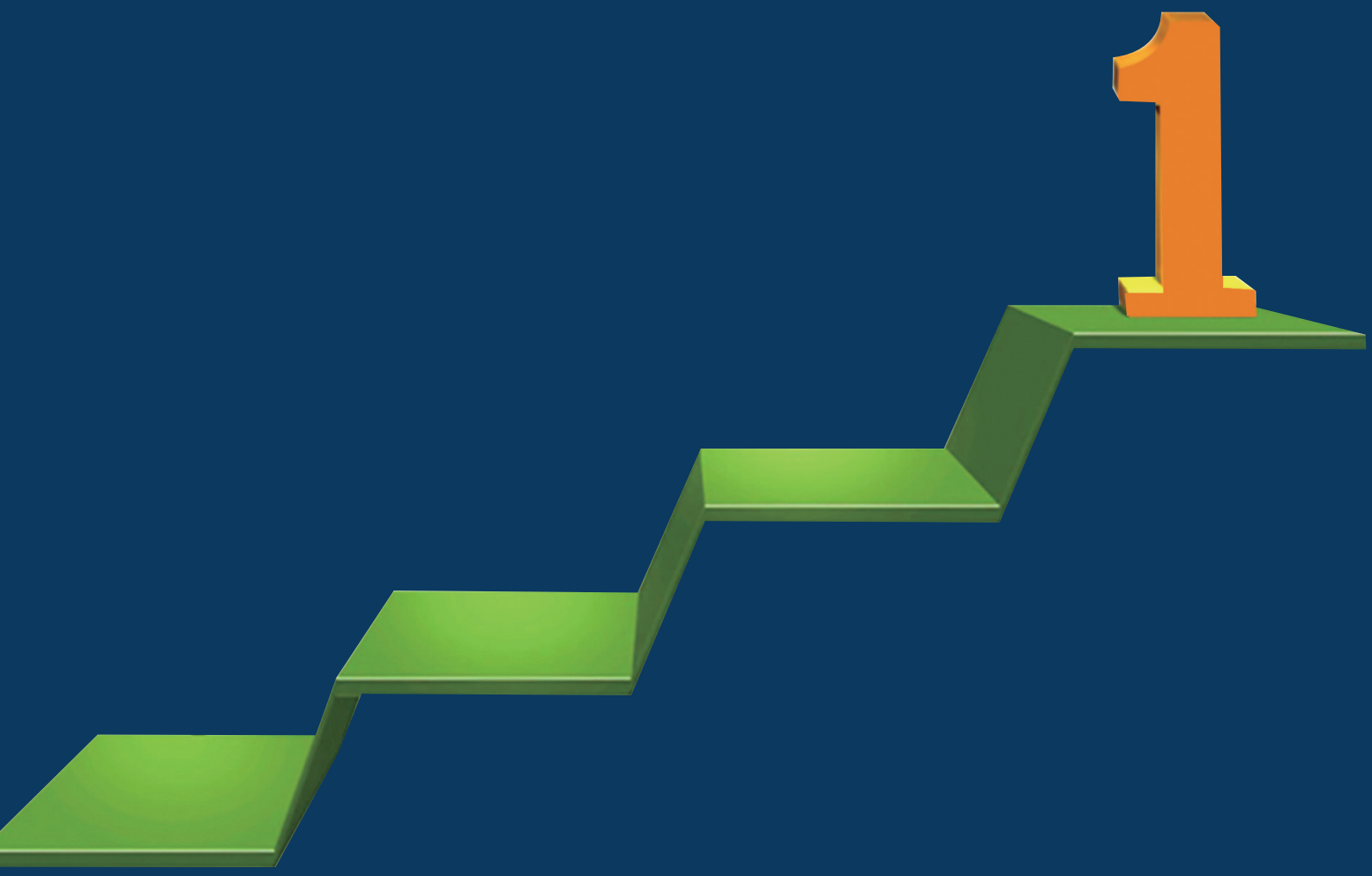

REVEN
Tools & Carbide

A 关于我们
BOUT US

本公司主要产品有：DIN69893(HSK)、DIN69871(SK)、DIN2080(NT)、MAS403(BT)、CAT、ISO、R8等标准接口的高精度刀柄系列，高精度SDC、GSK、ER筒夹系列等多种产品。产品精度稳定，外观整洁美观，规格齐全。产品畅销美国、德国、英国、意大利、西班牙、东南亚等国家和地区。

以生产“高精度、高转速”产品为导向，“专业、诚信、服务”为经营理念，依靠雄厚的技术力量、先进的加工检测设备，不断提供高转速、高精度、高寿命的产品，满足客户和市场的需求。

The company's main products are: DIN69893 (HSK), DIN69871 (SK), DIN2080 (NT), MAS 403 (BT) , CAT, ISO, the R8 the high-precision handle series of standard interface, high precision SDC, GSK, ER collet series and other products. Product accuracy stable, orderly and beautiful appearance, complete specifications. products sell well in the United States, Germany, Britain, Italy, Spain, southeast Asia and other countries and regions.

"professional, integrity, service" business philosophy, relying on strong technical advanced processing and testing equipment, continuously providing high speed, high precision, high life products, meet the needs of customers and market.

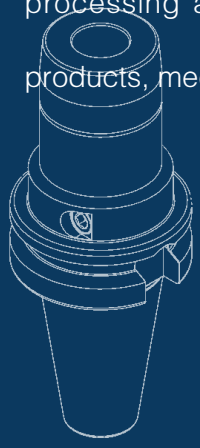

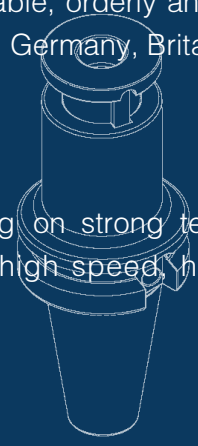
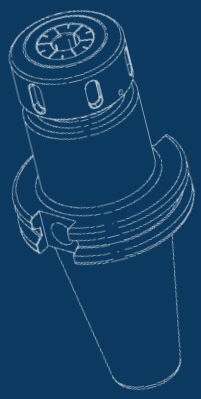

REVEN
Tools & Carbide

企业文化

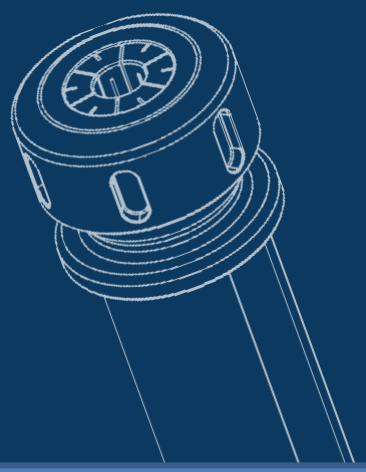

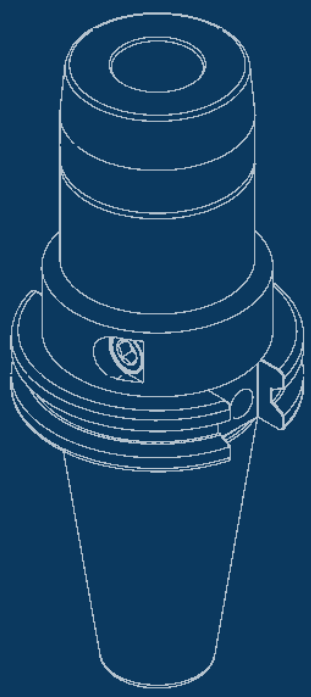

定位	区域领先
理念	诚信 敬业
目标	国际化
使命	成就客户

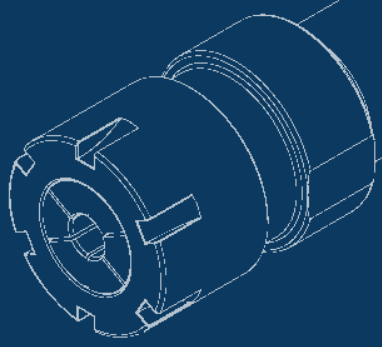

REVEN

Tools & Carbide

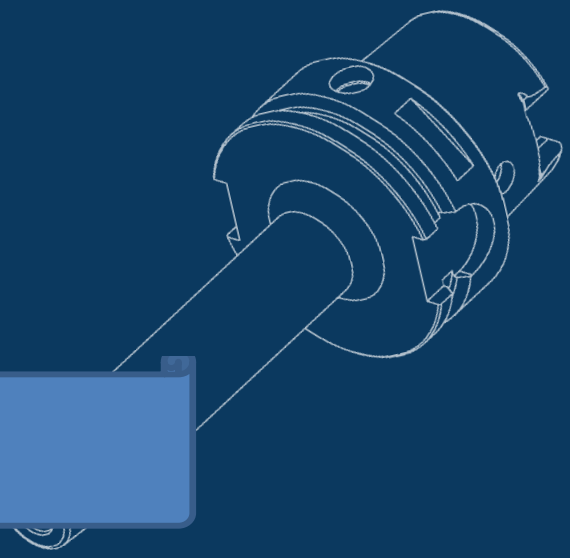

精密刀柄服务商

务实 创新

品牌化 专业化

成就品牌 成就员工

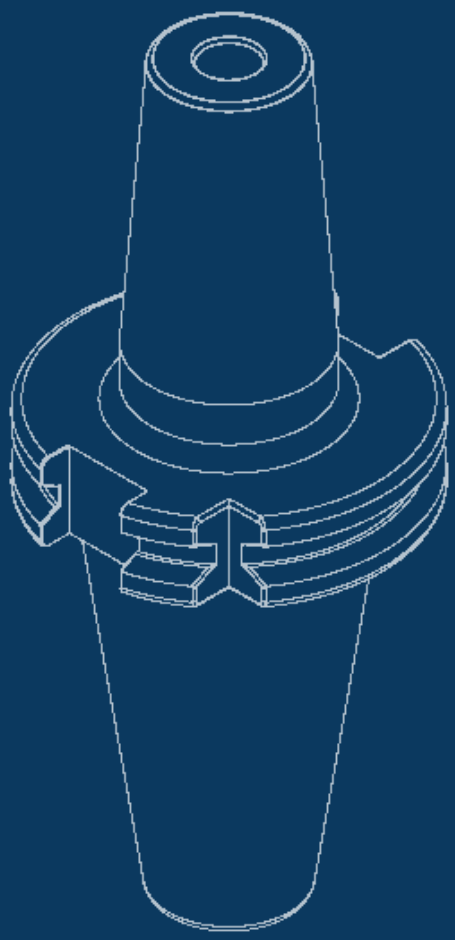

REVEN

Tools & Carbide

专业铸就品质

创新引领未来

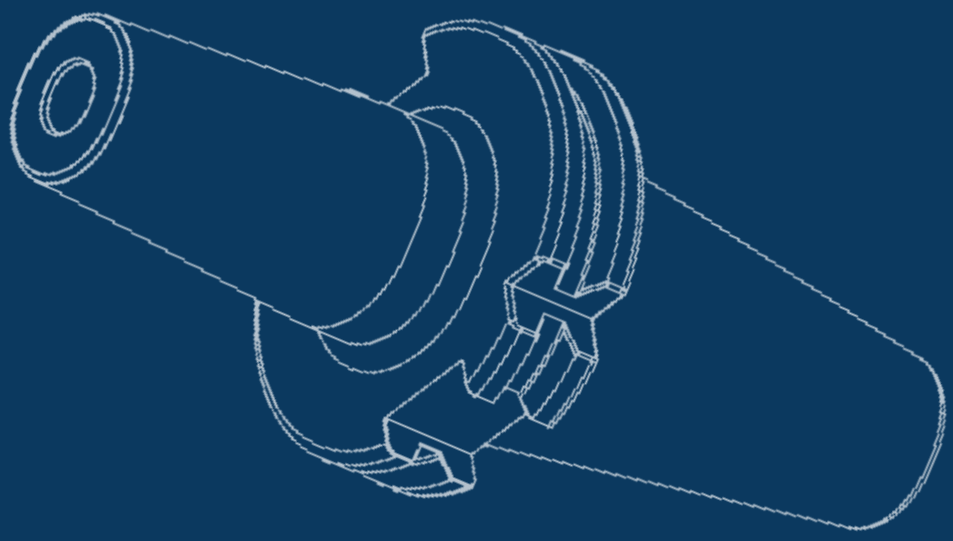

产品目录 CONTENT

REVEN
Tools & Carbide

P01 SDC 夹头刀柄 COLLET CHUCK
HSK-A
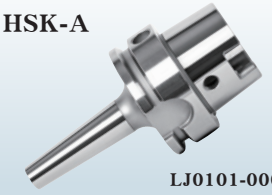
LJ0101-0002

P02 GSK 夹头刀柄 COLLET CHUCK
HSK-A

LJ0101-0004

P03 ER 夹头刀柄 COLLET CHUCK
HSK-A

LJ0101-0006

P04 GER 夹头刀柄 COLLET CHUCK
HSK-A

LJ0101-0008

P05 FMA 面铣刀柄 FACE MILL ARBOR
HSK-A
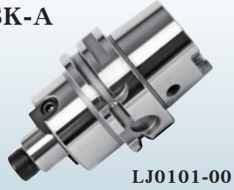
LJ0101-0010

P06 FMB 面铣刀柄 FACE MILL ARBOR
HSK-A
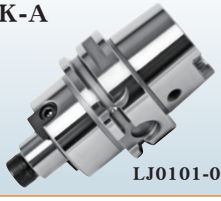
LJ0101-0012

P07 APU 一体式钻夹头刀柄 KEYLESS DRILL CHUCK
HSK-A

LJ0101-0014

P08 MTA 莫氏锥度刀柄 MORSE TAPER HOLDER
HSK-A

LJ0101-0016

P09 SLN 侧固式刀柄 SIDE LOCK HOLDER
HSK-A

LJ0101-0018

P10 SLN 侧固式刀柄（JIS型） SIDE LOCK HOLDER（JIS）
HSK-A

LJ0101-0020

P11 LTM 螺纹锁固刀柄 SCREWED END MILL HOLDER
HSK-A

LJ0101-0022

P12 HCK 精镗头刀柄 FINE BORING HEAD HOLDER
HSK-A
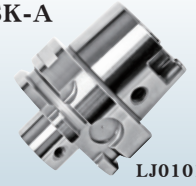
LJ0101-0024

P13 HLC 强力型刀柄 POWER MILLING CHUCK
HSK-A

LJ0101-0026

P14 毛坯型刀柄 BLANK HOLDER
HSK-A

LJ0101-0028

P15 GSK 夹头刀柄 COLLET CHUCK
HSK-E

LJ0102-0002

P16 GSK 夹头刀柄 COLLET CHUCK
HSK-E

LJ0102-0004

P17 ER 夹头刀柄 COLLET CHUCK
HSK-E

LJ0102-0006

P18 GER 夹头刀柄 COLLET CHUCK
HSK-E

LJ0102-0008

P19 ER 高速小径夹头刀柄 HIGH SPEED COLLET CHUCK
HSK-E

LJ0102-0010

P20 FMB 面铣刀柄 FACE MILL ARBOR
HSK-E

LJ0102-0012

P21 GSK 夹头刀柄 COLLET CHUCK
HSK-F

LJ0103-0002

P22 ER 夹头刀柄 COLLET CHUCK
HSK-F

LJ0103-0004

P23 GER 夹头刀柄 COLLET CHUCK
HSK-F

LJ0103-0006

P24 FMB 面铣刀柄 FACE MILL ARBOR
HSK-F

LJ0103-0008

产品目录 CONTENT

P25 ER 高速小径夹头刀柄 HIGH SPEED COLLET CHUCK
ISO

LJ0201-0002

P26 GER 夹头刀柄 COLLET CHUCK
ISO

LJ0201-0004

P27 GSK 夹头刀柄 COLLET CHUCK
ISO

LJ0201-0006

P28 ER 夹头刀柄 COLLET CHUCK
NBT

LJ0301-0002

P29 GER 夹头刀柄 COLLET CHUCK
NBT

LJ0301-0004

P30 GSK 夹头刀柄 COLLET CHUCK
NBT

LJ0301-0006

P31 SDC 夹头刀柄 COLLET CHUCK
BT

LJ0302-0002

P32 GSK 夹头刀柄 COLLET CHUCK
BT

LJ0302-0004

P33 ER 夹头刀柄 COLLET CHUCK
BT

LJ0302-0006

P34 GER 夹头刀柄 COLLET CHUCK
BT

LJ0302-0008

P35 FMA 面铣刀柄 FACE MILL ARBOR
BT

LJ0302-0010

P36 FMB 面铣刀柄 FACE MILL ARBOR
BT

LJ0302-0012

P37 FMB 加长面铣刀柄 FACE MILL ARBOR
BT

LJ0302-0014

P38 APU 一体式钻夹头刀柄 KEYLESS DRILL CHUCK
BT

LJ0302-0016

P39 MTA 莫氏锥度刀柄 MORSE TAPER HOLDER
BT

LJ0302-0018

P40 MTB 莫氏锥度刀柄 MORSE TAPER HOLDER
BT

LJ0302-0020

P41 SLN 侧固式刀柄 SIDE LOCK HOLDER
BT

LJ0302-0022

P42 SLN 侧固式刀柄（JIS型） SIDE LOCK HOLDER (JIS)
BT

LJ0302-0024

P43 LTM 螺纹锁固刀柄 SCREWED END MILL HOLDER
BT

LJ0302-0026

P44 HCK 精镗头刀柄 FINE BORING HEAD HOLDER
BT

LJ0302-0028

P45 HLC 强力型刀柄 POWER MILLING CHUCK
BT

LJ0302-0030

P46 双面拘束ER夹头刀柄 COLLET CHUCK
SBT

LJ0303-0002

P47 双面拘束FMB面铣刀柄 FACE MILL ARBOR
SBT

LJ0303-0004

P48 ER 夹头刀柄 COLLET CHUCK
SK

LJ0401-0002

P49 FMB 面铣刀柄 FACE MILL ARBOR

SK

LJ0401-0004

P50 SLN 侧固式刀柄 SIDE LOCK HOLDER

SK

LJ0401-0006

P51 MTA 莫氏锥度刀柄 MORSE TAPER HOLDER

SK

LJ0401-0008

P52 ER 夹头刀柄 COLLET CHUCK

CAT

LJ0501-0002

P53 FMA 面铣刀柄 FACE MILL ARBOR

CAT

LJ0501-0004

P54 SLN 侧固式刀柄 SIDE LOCK HOLDER

CAT

LJ0501-0006

P55 MTA 莫氏锥度刀柄 MORSE TAPER HOLDER

CAT

LJ0501-0008

P56 SDC 延长杆 EXTENSION BAR

LJ0601-0002

P57 ER 延长杆 EXTENSION BAR

LJ0602-0002

P58 ER 延长杆 EXTENSION BAR

LJ0602-0004

P59 三点模具组合 MODULAR CONCENTRICITY TEST GAUGE

P60 主轴静态测量棒 TEST BAR

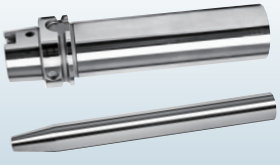

P61 SDC 筒夹 COLLET

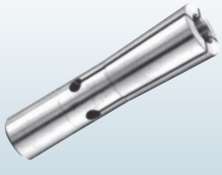

P62 CSK 高转速筒夹 CSK HIGH SPEED DOLLET

P63 ER 系列夹头 ER SERIES CHUCK

P64-65 拉钉系列 RETENTION KNOB

P66 螺帽 NUT

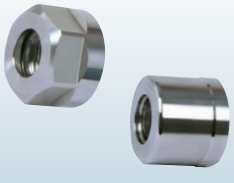

P67 ERM 扳手 SPANNER

P68 锁刀座 TOOL HOLDER

P69-77 参考资料

LJ0101-0002
SDC 夹头刀柄
COLLET CHUCK

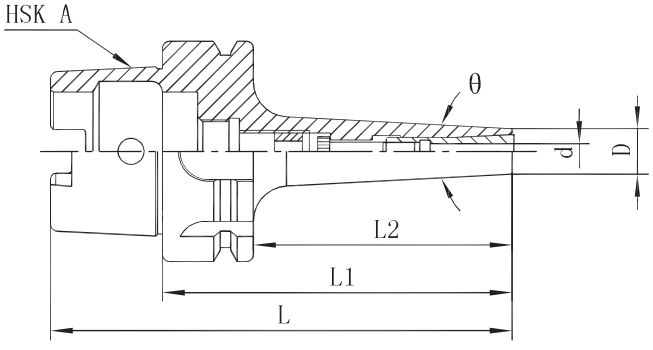

- 无螺帽的后拉式筒夹设计，刚性强稳定性高。
- 建议使用扭力扳手，不要超过推荐值的30%，过高的扭力，可能导致刀柄的变形。
- Collet nut design no pull, strong stability and high rigidity
- The recommended torque wrench, do not exceed the recommended value of 30%, high torque, the deformation may lead

mm

订货编号		L	L1	L2	θ	D	d（夹持范围）	推荐扭力
HSK63A	SDC6-90	122	90	64	6°	14	3～6	5Nm
	SDC6-120	152	120	94	6°	14	3～6	5Nm
	SDC6-150	182	150	124	6°	14	3～6	5Nm
	SDC8-100	132	100	74	6°	22	3～8	7Nm
	SDC8-120	152	120	94	6°	22	3～8	7Nm
	SDC8-150	182	150	124	6°	22	3～8	7Nm
	SDC12-120	152	120	94	—	34	3～12	12Nm
HSK100A	SDC6-110	160	110	81	6°	14	3～6	5Nm
	SDC6-150	200	150	121	6°	14	3～6	5Nm
	SDC8-120	170	120	91	6°	22	3～8	7Nm
	SDC8-150	200	150	121	6°	22	3～8	7Nm
	SDC12-120	170	120	91	—	34	3～12	12Nm

LJ0101-0004
GSK 夹头刀柄
COLLET CHUCK

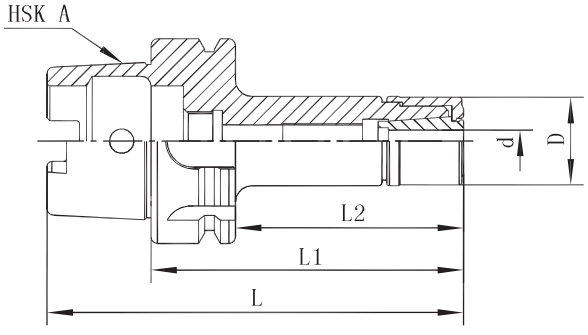

- 筒夹采用单边4° 设计，重复装夹精度更高
- 全圆螺帽设计，噪音低、风阻小，适合高速
- The design uses 4 deg collet clamp unilateral, high precision repeat loading
- All – round nut design, low noise, small wind resistance, suitable for high speed

mm

订货编号		L	L1	L2	D	d (夹持范围)
HSK63A	GSK06–70	102	70	44	19.5	2～6
	GSK06–100	132	100	74	19.5	2～6
	GSK06–130	162	130	104	19.5	2～6
	GSK10–70	102	70	44	27.5	3～10
	GSK10–100	132	100	74	27.5	3～10
	GSK10–130	162	130	104	27.5	3～10
	GSK10–160	192	160	134	27.5	3～10
	GSK13–70	102	70	44	36	3～13
	GSK13–100	132	100	74	36	3～13
	GSK13–130	162	130	104	36	3～13
	GSK13–160	192	160	134	36	3～13
	GSK16–70	102	70	44	40.5	3～16
	GSK16–100	132	100	74	40.5	3～16
	GSK16–130	162	130	104	40.5	3～16
	GSK16–160	192	160	134	40.5	3～16
	GSK20–70	102	70	44	48.5	3～20
	GSK20–100	132	100	74	48.5	3～20
	GSK20–130	162	130	104	48.5	3～20
	GSK20–160	192	160	134	48.5	3～20
	GSK25–100	132	100	74	55.5	6～25
	GSK25–130	162	130	104	55.5	6～25
HSK100A	GSK10–100	150	100	71	27.5	3～10
	GSK10–160	210	160	131	27.5	3～10
	GSK13–100	150	100	71	36	3～13
	GSK13–160	210	160	131	36	3～13
	GSK16–100	150	100	71	40.5	3～16
	GSK16–160	210	160	131	40.5	3～16
	GSK20–100	150	100	71	48.5	3～20
	GSK20–160	210	160	131	48.5	3～20
	GSK25–100	150	100	71	55.5	6～25
	GSK25–160	210	160	131	55.5	6～25

LJ0101-0006
ER 夹头刀柄
COLLET CHUCK

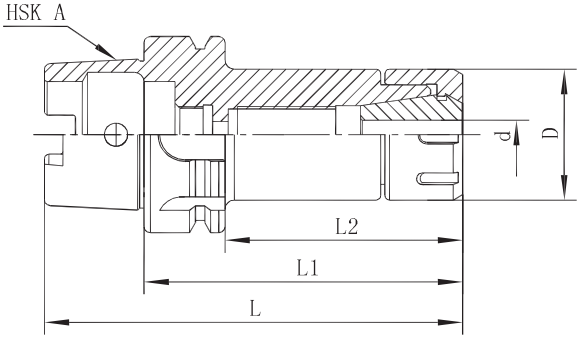

- 装入筒夹和更换刀具，必须把螺帽和本体螺纹清理干净，并添加润滑脂，否则会造成螺纹损坏
- 装置时筒夹必须先置入螺帽，再装入刀具，接着锁固本体
- 刀具置入筒夹内孔，必需超出筒夹有效夹持长度，避免不当锁紧，造成损坏
- A collet and replacement of cutting tools, screw nut and body must be clean, and add grease, Otherwise it will cause damage to the thread
- The device must be placed when the collet nut, and then into the tool, then the lock body
- The placement tool collet hole, clamping collet must exceed effective length, to avoid improper locking dama

mm

订货编号		L	L1	L2	D	d (夹持范围)
HSK63A	ER16–75	107	75	49	28	1～10
	ER16–100	132	100	74	28	1～10
	ER16–130	162	130	104	28	1～10
	ER16–160	192	160	134	28	1～10
	ER20–75	107	75	49	34	1～13
	ER20–100	132	100	74	34	1～13
	ER20–130	162	130	104	34	1～13
	ER20–160	192	160	134	34	1～13
	ER25–75	107	75	49	42	3～16
	ER25–100	132	100	74	42	3～16
	ER25–130	162	130	104	42	3～16
	ER25–160	192	160	134	42	3～16
	ER32–75	107	75	49	50	3～20
	ER32–100	132	100	74	50	3～20
	ER32–130	162	130	104	50	3～20
	ER32–160	192	160	134	50	3～20
	ER40–120	152	120	94	63	3～26
	ER40–160	192	160	134	63	3～26
HSK100A	ER16–100	150	100	71	28	1～10
	ER16–160	210	160	131	28	1～10
	ER20–100	150	100	71	34	1～13
	ER20–160	210	160	131	34	1～13
	ER25–100	150	100	71	42	3～16
	ER25–160	210	160	131	42	3～16
	ER32–100	150	100	71	50	3～20
	ER32–160	210	160	131	50	3～20
	ER40–100	150	100	71	63	3～26
	ER40–160	210	160	131	63	3～26

LJ0101-0008
GER 夹头刀柄
COLLET CHUCK

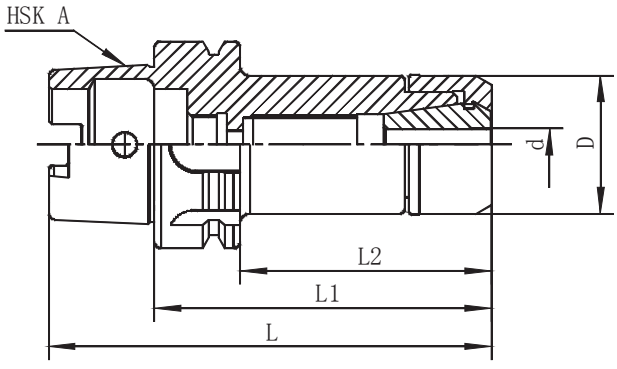

- 装入筒夹和更换刀具，必须把螺帽和本体螺纹清理干净，并添加润滑脂，否则会造成螺纹损坏
- 全圆无偏心螺帽设计，噪音低、风阻小，适合高速
- Into the collet and replacement of cutting tools, must clean up the thread of nut and ontology, and add grease, otherwise it will cause damage to the screw thread
- Full circle – no eccentric nut design, low noise, small wind resistance, suitable for high speed

mm

订货编号		L	L1	L2	D	d (夹持范围)
HSK63A	GER16–75	102	75	49	27.5	1 ~ 10
	GER16–100	132	100	74	27.5	1 ~ 10
	GER16–130	162	130	104	27.5	1 ~ 10
	GER16–160	192	160	134	27.5	1 ~ 10
	GER20–75	102	75	49	30.5	1 ~ 13
	GER20–100	132	100	74	30.5	1 ~ 13
	GER20–130	162	130	104	30.5	1 ~ 13
	GER20–160	192	160	134	30.5	1 ~ 13
	GER25–75	102	75	49	35.5	3 ~ 16
	GER25–100	132	100	74	35.5	3 ~ 16
	GER25–130	162	130	104	35.5	3 ~ 16
	GER25–160	192	160	134	35.5	3 ~ 16
	GER32–75	102	75	49	48.5	3 ~ 20
	GER32–100	132	100	74	48.5	3 ~ 20
	GER32–130	162	130	104	48.5	3 ~ 20
	GER32–160	192	160	134	48.5	3 ~ 20
HSK100A	GER16–100	150	100	71	27.5	1 ~ 10
	GER16–160	210	160	131	27.5	1 ~ 10
	GER20–100	150	100	71	30.5	1 ~ 13
	GER20–160	210	160	131	30.5	1 ~ 13
	GER25–100	150	100	71	35.5	3 ~ 16
	GER25–160	210	160	131	35.5	3 ~ 16
	GER32–100	150	100	71	48.5	3 ~ 20
	GER32–160	210	160	131	48.5	3 ~ 20

REVEN
Tools & Carbide

LJ0101-0010
FMA 面铣刀柄
FACE MILL ARBOR

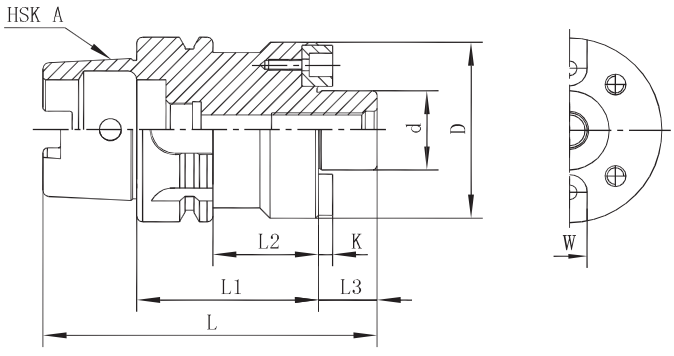

● 平面铣刀配合部位（d）轴系公差h6
● The face milling cutter with parts (d) shaft tolerance h6

mm

订货编号		L	L1	L2	L3	d	D	K	W
HSK63A	FMA25.4–50	102	50	24	20	25.4	50	4.52	9.52
	FMA25.4–100	152	100	74	20	25.4	50	4.52	9.52
	FMA31.75–60	114	60	34	22	31.75	60	6.7	12.7
	FMA31.75–100	154	100	74	22	31.75	60	6.7	12.7
	FMA38.1–60	117	60	34	25	38.1	75	8.87	15.87
HSK100A	FMA25.4–60	130	60	31	20	25.4	50	4.52	9.52
	FMA25.4–100	170	100	71	20	25.4	50	4.52	9.52
	FMA31.75–60	132	60	31	22	31.75	60	5.8	12.7
	FMA31.75–100	172	100	71	22	31.75	60	5.8	12.7
	FMA38.1–60	135	60	31	25	38.1	80	8.3	15.87

LJ0101-0012
FMB 面铣刀柄
FACE MILL ARBOR

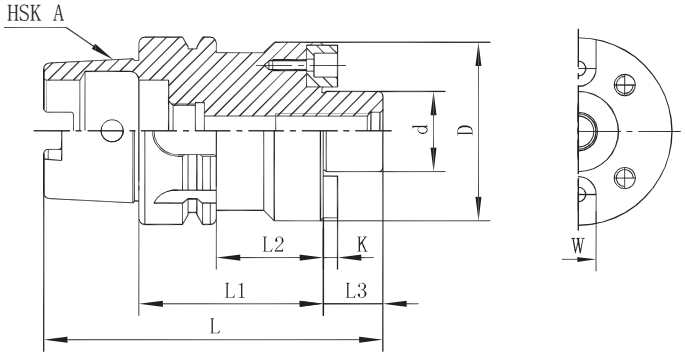

● 平面铣刀配合部位（d）轴系公差h6
● The face milling cutter with parts (d) shaft tolerance h6

mm

订货编号		L	L1	L2	L3	d	D	K	W
HSK63A	FMB16-50	99	50	24	17	16	32	3.8	8
	FMB16-100	149	100	74	17	16	32	3.8	8
	FMB22-50	100	50	24	18	22	48	4.8	10
	FMB22-100	150	100	74	18	22	48	4.8	10
	FMB27-60	112	60	44	20	27	60	5.8	12
	FMB27-100	152	100	74	20	27	60	5.8	12
	FMB32-60	114	60	44	22	32	63	6.8	14
	FMB32-100	154	100	74	22	32	63	6.8	14
	FMB40-60	117	60	44	25	40	75	8.3	16
HSK100A	FMB22-60	128	60	31	18	22	48	4.8	10
	FMB22-100	168	100	71	18	22	48	4.8	10
	FMB27-60	130	60	31	20	27	60	5.8	12
	FMB27-100	170	100	71	20	27	60	5.8	12
	FMB32-60	132	60	31	22	32	63	6.8	14
	FMB32-100	172	100	71	22	32	63	6.8	14
	FMB40-60	135	60	31	25	40	85	8.3	16

REVEN
Tools & Carbide

LJ0101-0014
APU 一体式钻夹头刀柄
KEYLESS DRILL CHUCK

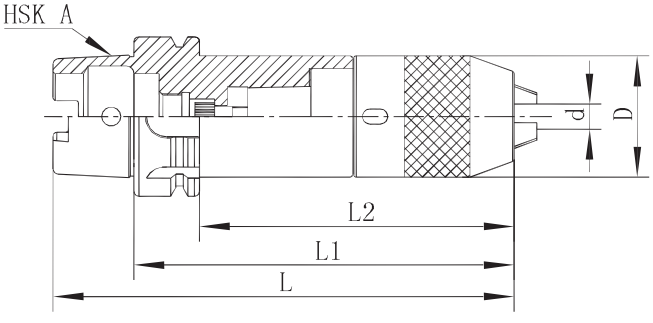

- 刀柄和夹头结合为一体，即使作重切屑加工，夹头也不会脱落
- 操作容易、快速方便、安全性高、不易松脱
- The handle and the chuck is combined, even for heavy cutting processing, chuck will not fall off
- Fast, easy operation, high safety

mm

订货编号		L	L1	D	d (夹持范围)
HSK63A	APU08-120	152	120	38	1 ~ 8
	APU13-155	187	155	50	1 ~ 13
	APU16-160	192	160	58	3 ~ 16
HSK100A	APU13-160	210	160	50	1 ~ 13
	APU16-165	215	165	58	3 ~ 16

LJ0101-0016
MTA 莫氏锥度刀柄
MORSE TAPER HOLDER

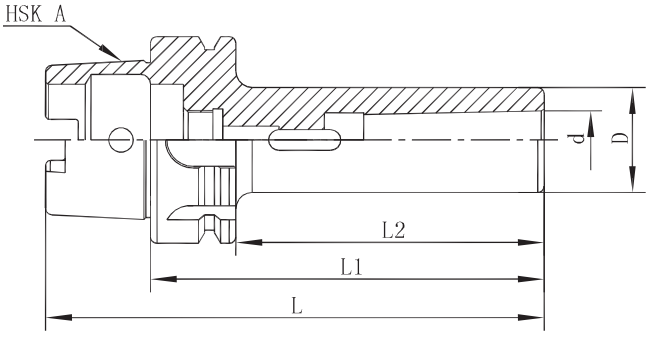

- 用于带莫氏锥度的钻头等刀具、装卸刀具时间短、容易操作
- For Morse taper drill tool, tool handling time is short, easy to operate

mm

订货编号		L	L1	L2	D	d
HSK63A	MTA1-100	132	100	74	25	12.065
	MTA2-120	152	120	94	32	17.78
	MTA3-140	172	140	114	40	23.825
	MTA4-160	192	160	134	50	31.267
HSK100A	MTA1-110	160	110	81	25	12.065
	MTA2-120	170	120	91	32	17.78
	MTA3-150	200	150	121	40	23.825
	MTA4-170	220	170	141	50	31.267

REVEN
Tools & Carbide

LJ0101-0018
SLN 侧固式刀柄
SIDE LOCK HOLDER

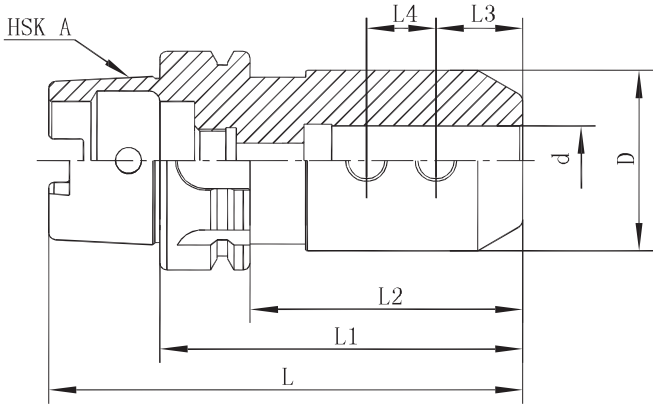

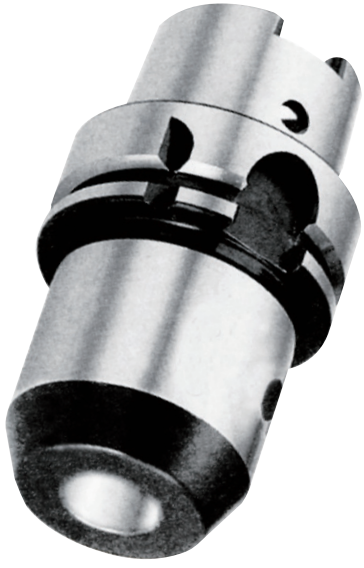

- 夹持孔径公差H5
- Φ20以内一只锁固螺钉，Φ25以上两只锁固螺钉
- The clamping hole tolerance H5
- With less than 20 mm a locking screw, with a diameter of 25 mm above two locking screw

mm

订货编号		L	L1	L2	L3	L4	D	d
HSK63A	SLN06-65	97	65	39	18	—	25	6
	SLN08-65	97	65	39	18	—	28	8
	SLN10-65	97	65	39	20	—	35	10
	SLN12-80	112	80	54	22.5	—	42	12
	SLN16-80	112	80	54	24	—	48	16
	SLN20-80	112	80	54	25	—	52	20
	SLN25-110	142	110	84	24	25	57	25
	SLN32-110	142	110	84	24	28	63	32
HSK100A	SLN06-80	130	80	51	18	—	25	6
	SLN08-80	130	80	51	18	—	28	8
	SLN10-80	130	80	51	20	—	35	10
	SLN12-80	130	80	51	22.5	—	42	12
	SLN16-100	150	100	71	24	—	48	16
	SLN20-100	150	100	71	25	—	52	20
	SLN25-120	170	120	91	24	25	57	25
	SLN32-120	170	120	91	24	28	63	32
	SLN40-120	170	120	91	30	32	72	40

LJ0101-0020
SLN 侧固式刀柄（JIS型）
SIDE LOCK HOLDER（JIS）

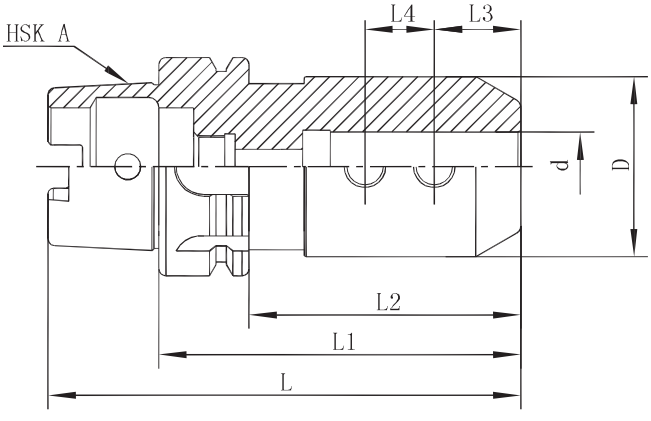

- 夹持孔径公差H5
- 不分孔径皆为两只锁固螺钉
- The clamping hole tolerance H5
- Regardless of aperture are two locking screw

mm

订货编号		L	L1	L2	L3	L4	D	d
HSK63A	SLN06-65	97	65	39	12	10	25	6
	SLN08-65	97	65	39	14	12	28	8
	SLN10-65	97	65	39	15	14	35	10
	SLN12-80	112	80	54	20	16	42	12
	SLN16-80	112	80	54	22	18	48	16
	SLN20-80	112	80	54	25	20	52	20
	SLN25-110	142	110	84	24	25	57	25
	SLN32-110	142	110	84	24	28	63	32
HSK100A	SLN06-80	130	80	51	12	10	25	6
	SLN08-80	130	80	51	14	12	28	8
	SLN10-80	130	80	51	15	14	35	10
	SLN12-80	130	80	51	20	16	42	12
	SLN16-100	150	100	71	22	18	48	16
	SLN20-100	150	100	71	25	20	52	20
	SLN25-120	170	120	91	24	25	57	25
	SLN32-120	170	120	91	24	28	63	32
	SLN40-120	170	120	91	30	32	72	40

REVEN
Tools & Carbide

LJ0101-0022
LTM 螺纹锁固刀柄
SCREWED END MILL HOLDER

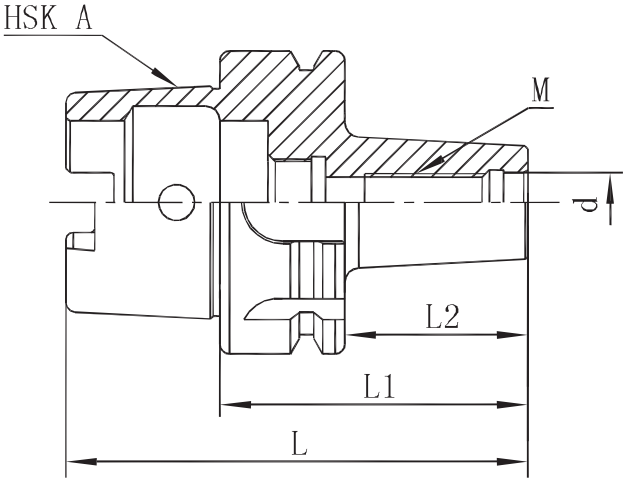

● 刀头的多种选择增大刀柄的使用范围，通孔利于减震、出水
● Many – knife head use increases the range of handle, a through hole for damping and water

mm

订货编号		L	L1	L2	D	M
HSK63A	LTM6–60	92	60	34	13	M6 × 1.0P
	LTM8–60	92	60	34	15	M8 × 1.25P
	LTM10–60	92	60	34	19	M10 × 1.5P
	LTM12–70	102	70	44	24	M12 × 1.75P
	LTM16–80	112	80	54	29	M16 × 2.0P
HSK100A	LTM6–60	110	60	31	13	M6 × 1.0P
	LTM8–60	110	60	31	15	M8 × 1.25P
	LTM10–60	110	60	31	19	M10 × 1.5P
	LTM12–70	120	70	41	24	M12 × 1.75P
	LTM16–80	130	80	51	29	M16 × 2.0P

LJ0101-0024
HCK 精镗头刀柄
FINE BORING HEAD HOLDER

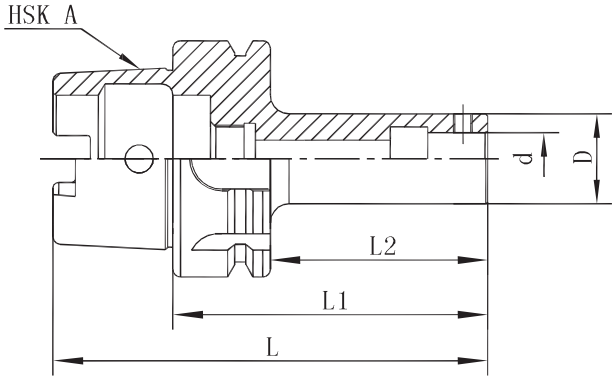

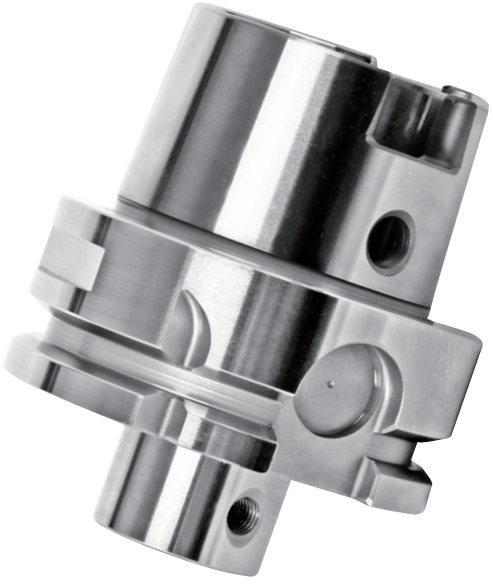

- 夹持孔径公差H6
- 固定螺钉30° 设计，锁紧时可将镗头向主轴方向拉引，使镗头的端面与刀杆完全贴合
- 只需使用六角扳手锁紧，操作简单、精确牢固
- The clamping hole tolerance H6
- Screw 30 degrees design locking can be plug to the spindle direction of the pull head, the end face lined with a knife bar fit completely
- Just use six angle wrench locking, simple operation, accurate and stable

mm

订货编号		L	L1	L2	D	d
HSK63A	HCK1-80	112	80	54	19	11
	HCK2-90	122	90	64	23.5	14
	HCK3-100	132	100	74	31	18
	HCK4-90	122	90	64	39	22
	HCK5-80	112	80	54	50	28
HSK100A	HCK1-125	175	125	96	19	11
	HCK2-125	175	125	96	23.5	14
	HCK3-125	175	125	96	31	18
	HCK4-115	165	115	86	39	22
	HCK5-115	165	115	86	50	28
	HCK6-110	160	110	81	63	36

REVEN
Tools & Carbide

LJ0101-0026
HLC 强力型刀柄
POWER MILLING CHUCK

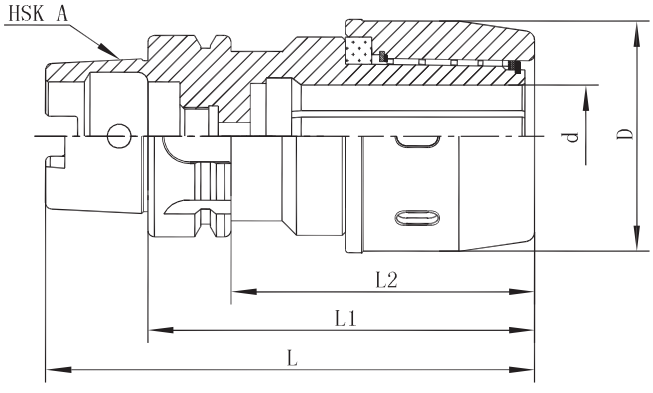

- 刀柄夹持孔6槽设计、防止滑动、增大夹持力
- 螺帽外表均匀一致、降低风阻、适合高速
- Handle clamping hole 6 to prevent sliding groove design increases the blessing
- The appearance of nut uniformity, reduce wind resistance, suitable for high speed

mm

订货编号		L	L1	L2	D	d (夹持范围)
HSK63A	HLC32–120	152	120	94	73	6 ~ 32
	HLC32–150	182	150	124	73	6 ~ 32
HSK100A	HLC32–120	170	120	91	73	6 ~ 32
	HLC32–165	215	165	136	73	6 ~ 32

LJ0101-0028
毛坯型刀柄
BLANK HOLDER

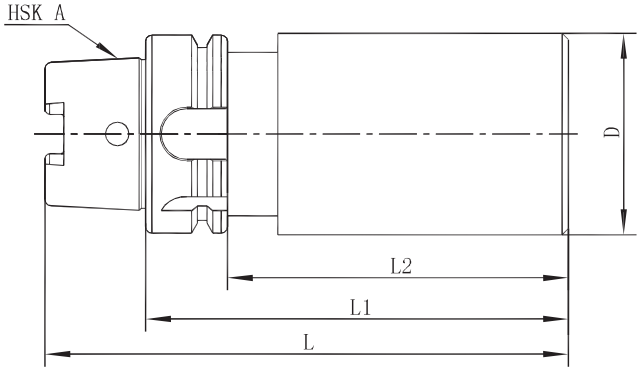

- 用于特殊制造
- 锥柄法兰槽硬化并精磨，圆柱部分未硬化
- For special manufacture
- Taper shank flange groove hardening and fine grinding, cylindrical part not hardened

mm

订货编号	L	L1	L2	D
HSK63A	282	250	224	64
HSK100A	300	250	221	83

REVEN
Tools & Carbide

LJ0102-0002
SDC 夹头刀柄
COLLET CHUCK

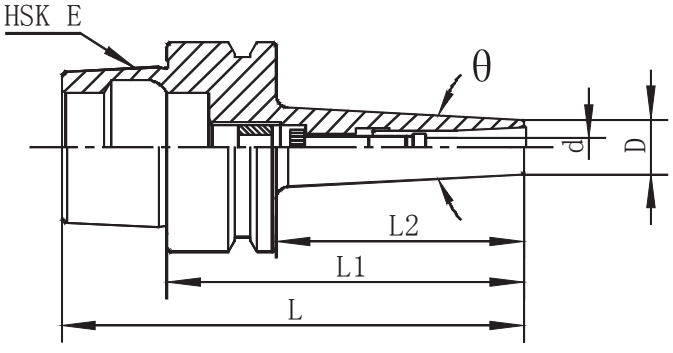

- 无螺帽的后拉式筒夹设计，刚性强稳定性高
- 建议使用扭力扳手，不要超过推荐值的30%，过高的扭力，可能导致刀柄的变形
- Collet nut design no pull, strong stability and high rigidity
- The recommended torque wrench, do not exceed the recommended value of 30%, high torque, the deformation may lead

mm

订货编号		L	L1	L2	θ	D	d (夹持范围)
HSK40E	SDC6-70	90	70	50	6°	14	3～6
	SDC8-80	100	80	60	6°	22	3～8
HSK50E	SDC6-75	100	75	49	6°	14	3～6
	SDC8-80	105	80	54	6°	22	3～8

LJ0102-0004
GSK 夹头刀柄
COLLET CHUCK

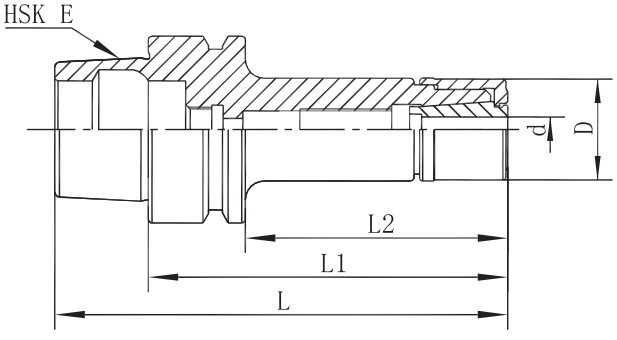

- 装入筒夹和更换刀具，必须把螺帽和本体螺纹清理干净，并添加润滑脂，否则会造成螺纹损坏
- 全圆无偏心螺帽设计，噪音低、风阻小，适合高速
- Into the collet and replacement of cutting tools, must clean up the thread of nut and ontology, and add grease, otherwise it will cause damage to the screw thread
- Full circle – no eccentric nut design, low noise, small wind resistance, suitable for high speed

mm

订货编号		L	L1	L2	D	d (夹持范围)
HSK32E	GSK06–50	66	50	30	19.5.	2 ~ 6
	GSK10–50	66	50	30	27.5	3 ~ 10
HSK40E	GSK06–65	85	65	35	19.5	2 ~ 6
	GSK10–65	85	65	35	27.5	3 ~ 10
	GSK10–100	120	100	80	27.5	3 ~ 10
HSK50E	GSK06–70	95	70	44	19.5	2 ~ 6
	GSK10–70	95	70	44	27.5	3 ~ 10
	GSK16–70	95	70	44	40.5	3 ~ 16

REVEN
Tools & Carbide

LJ0102-0006
ER 夹头刀柄
COLLET CHUCK

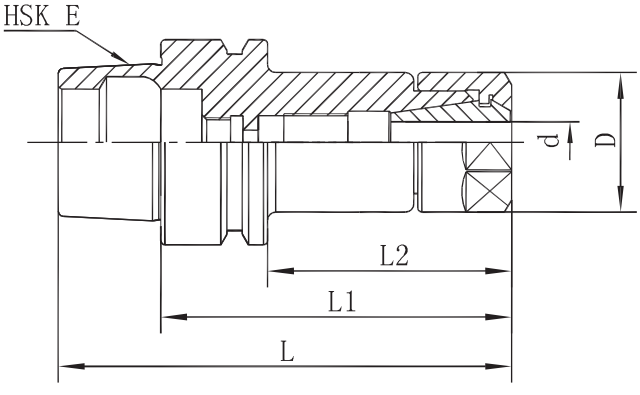

- 装入筒夹和更换刀具，必须把螺帽和本体螺纹清理干净，并添加润滑脂，否则会造成螺纹损坏
- 装置时筒夹必须先置入螺帽，再装入刀具，接着锁固本体
- 刀具置入筒夹内孔，必需超出筒夹有效夹持长度，避免不当锁固，造成损坏
- A collet and replacement of cutting tools, screw nut and body must be clean, and add grease, Otherwise it will cause damage to the thread
- The device must be placed when the collet nut, and then into the tool, then the lock body
- The placement tool collet hole, clamping collet must exceed effective length, to avoid improper locking dama

mm

订货编号		L	L1	L2	D	d (夹持范围)
HSK40E	ER16–65	85	65	45	28	1 ~ 10
	ER20–65	85	65	45	34	1 ~ 13
	ER25–70	90	70	50	42	3 ~ 16
	ER32–70	90	70	50	50	3 ~ 20
HSK50E	ER16–70	95	70	44	28	1 ~ 10
	ER20–70	95	70	44	34	1 ~ 13
	ER25–70	95	70	44	42	3 ~ 16
	ER32–80	105	80	54	50	3 ~ 20

LJ0102-0008
GER 夹头刀柄
COLLET CHUCK

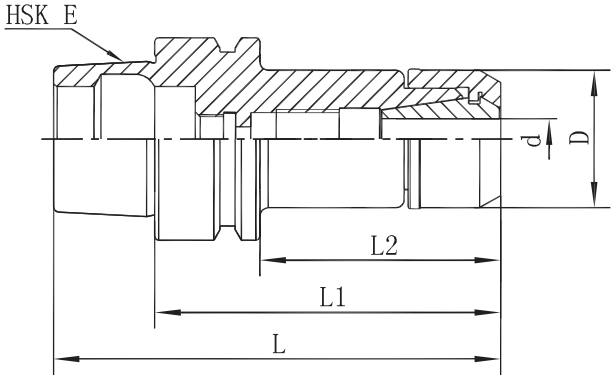

- 装入筒夹和更换刀具，必须把螺帽和本体螺纹清理干净，并添加润滑脂，否则会造成螺纹损坏
- 全圆无偏心螺帽设计，噪音低、风阻小，适合高速
- Into the collet and replacement of cutting tools, must clean up the thread of nut and ontology, and add grease, otherwise it will cause damage to the screw thread
- Full circle – no eccentric nut design, low noise, small wind resistance, suitable for high speed

mm

订货编号		L	L1	L2	D	d (夹持范围)
HSK32E	GER16–50	66	50	30	27.5	1 ~ 10
	GER20–50	66	50	30	30.5	1 ~ 13
HSK40E	GER16–65	85	65	45	27.5	1 ~ 10
	GER20–65	85	65	45	30.5	1 ~ 13
	GER25–70	90	70	50	35.5	3 ~ 16
HSK50E	GER16–70	95	70	44	27.5	1 ~ 10
	GER20–70	95	70	44	30.5	1 ~ 13
	GER25–70	95	70	44	35.5	3 ~ 16

REVEN
Tools & Carbide

LJ0102-0010
ER 高速小径夹头刀柄
HIGH SPEED COLLET CHUCK

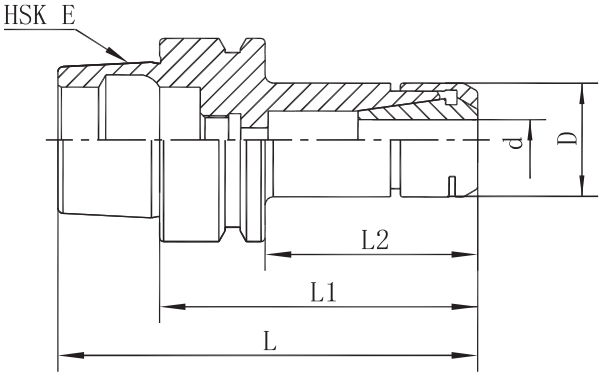

- 装入筒夹和更换刀具，必须把螺帽和本体螺纹清理干净，并添加润滑脂，否则会造成螺纹损坏
- Into the collet and replacement of cutting tools, must clean up the thread of nut and ontology, and add grease, otherwise it will cause damage to the screw thread

mm

订货编号		L	L1	L2	D	d (夹持范围)
HSK32E	ER16–50MS	66	50	30	22	1 ~ 10
	ER20–50MS	66	50	30	28	1 ~ 13
HSK40E	ER16–65MS	85	65	45	22	1 ~ 10
	ER20–65MS	85	65	45	28	1 ~ 13
HSK50E	ER16–70MS	95	70	44	22	1 ~ 10
	ER20–70MS	95	70	44	28	1 ~ 13

LJ0102-0012
FMB 面铣刀柄
FACE MILL ARBOR

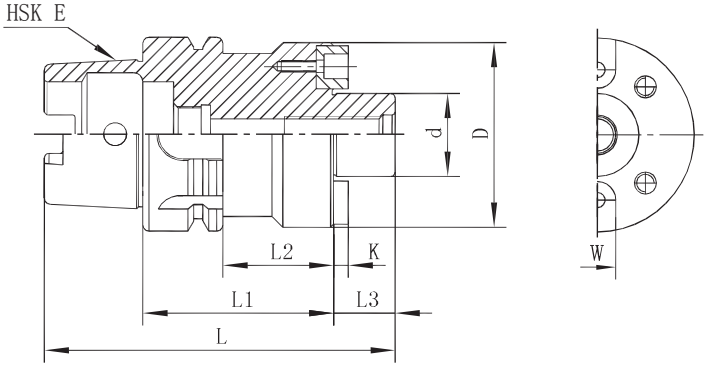

- 平面铣刀配合部位（d）轴系公差h6
- The face milling cutter with parts (d) shaft tolerance h6

mm

订货编号		L	L1	L2	L3	d	D	K	W
HSK40E	FMB16-60	97	60	40	17	16	32	3.8	8
	FMB22-60	98	60	40	18	22	48	4.8	10
HSK50E	FMB16-60	102	60	34	17	16	32	3.8	8
	FMB22-60	103	100	34	18	22	48	4.8	10
	FMB27-60	105	60	34	20	27	60	5.8	12

REVEN
Tools & Carbide

LJ0103-0002
GSK 夹头刀柄
COLLET CHUCK

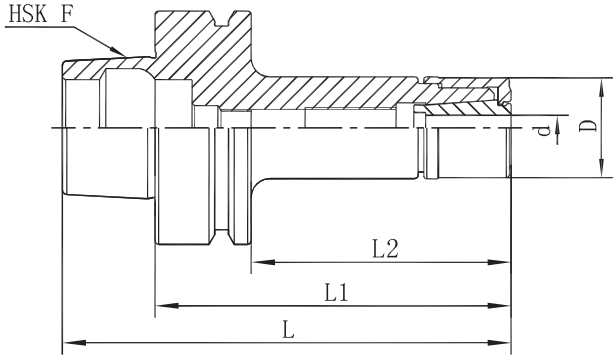

- 筒夹采用单边4° 设计，重复装夹精度更高
- 全圆螺帽设计，噪音低、风阻小，适合高速
- The design uses 4 deg collet clamp unilateral, high precision repeat loading
- All – round nut design, low noise, small wind resistance, suitable for high speed

mm

订货编号		L	L1	L2	D	d (夹持范围)
HSK63F	GSK10–70	95	70	44	27.5	3 ~ 10
	GSK10–100	125	100	74	27.5	3 ~ 10
	GSK13–70	95	70	44	36	3 ~ 13
	GSK13–100	125	100	74	36	3 ~ 13
	GSK16–70	95	70	44	40.5	3 ~ 16
	GSK16–100	125	100	74	40.5	3 ~ 16
	GSK20–80	105	80	54	48.5	3 ~ 20
	GSK20–100	125	100	74	48.5	3 ~ 20

LJ0103-0004
ER 夹头刀柄
COLLET CHUCK

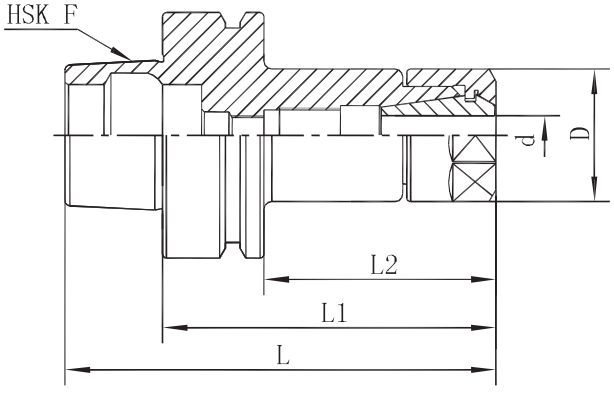

- 装入筒夹和更换刀具，必须把螺帽和本体螺纹清理干净，并添加润滑脂，否则会造成螺纹损坏
- 装置时筒夹必须先置入螺帽，再装入刀具，接着锁紧本体
- 刀具置入筒夹内孔，必需超出筒夹有效夹持长度，避免不当锁紧，造成损坏
- A collet and replacement of cutting tools, screw nut and body must be clean, and add grease, Otherwise it will cause damage to the thread
- The device must be placed when the collet nut, and then into the tool, then the lock body
- The placement tool collet hole, clamping collet must exceed effective length, to avoid improper locking dama

mm

订货编号		L	L1	L2	D	d (夹持范围)
HSK63F	ER16–75	100	75	49	28	1 ~ 10
	ER16–100	125	100	74	28	1 ~ 10
	ER20–75	100	75	49	34	1 ~ 13
	ER20–100	125	100	74	34	1 ~ 13
	ER25–75	100	75	49	42	3 ~ 16
	ER25–100	125	100	74	42	3 ~ 16
	ER32–80	105	80	54	50	3 ~ 20
	ER32–100	125	100	74	50	3 ~ 20
	ER40–80	105	80	54	63	3 ~ 26
	ER40–100	125	100	74	63	3 ~ 26

REVEN
Tools & Carbide

LJ0103-0006
GER 夹头刀柄
COLLET CHUCK

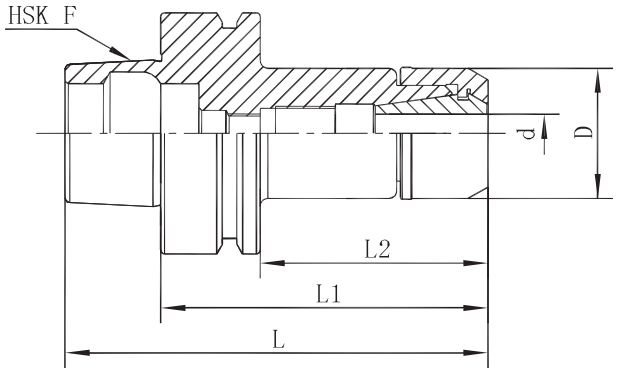

- 装入筒夹和更换刀具，必须把螺帽和本体螺纹清理干净，并添加润滑脂，否则会造成螺纹损坏
- 全圆无偏心螺帽设计，噪音低、风阻小，适合高速
- Into the collet and replacement of cutting tools, must clean up the thread of nut and ontology, and add grease, otherwise it will cause damage to the screw thread
- Full circle – no eccentric nut design, low noise, small wind resistance, suitable for high speed

mm

订货编号		L	L1	L2	D	d (夹持范围)
HSK63F	GER16–75	100	75	49	27.5	1 ~ 10
	GER16–100	125	100	74	27.5	1 ~ 10
	GER20–75	100	75	49	30.5	1 ~ 13
	GER20–100	125	100	74	30.5	1 ~ 13
	GER25–75	100	75	49	35.5	3 ~ 16
	GER25–100	125	100	74	35.5	3 ~ 16
	GER32–80	105	80	54	48.5	3 ~ 20
	GER32–100	125	100	74	48.5	3 ~ 20

LJ0103-0008
FMB 面铣刀柄
FACE MILL ARBOR

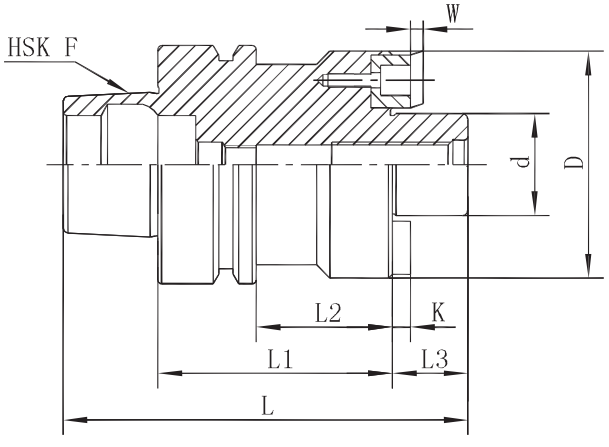

- 平面铣刀配合部位（d）轴系公差h6
- The face milling cutter with parts (d) shaft tolerance h6

mm

订货编号		L	L1	L2	L3	d	D	K	W
HSK63F	FMB16-50	92	50	24	17	16	32	3.8	8
	FMB16-100	142	100	74	17	16	32	3.8	8
	FMB22-50	93	50	24	18	22	48	4.8	10
	FMB22-100	143	100	74	18	22	48	4.8	10
	FMB27-60	95	60	44	20	27	60	5.8	12
	FMB27-100	145	100	74	20	27	60	5.8	12

REVEN
Tools & Carbide

LJ0201-0002
ER 高速小径夹头刀柄
HIGH SPEED COLLET CHUCK

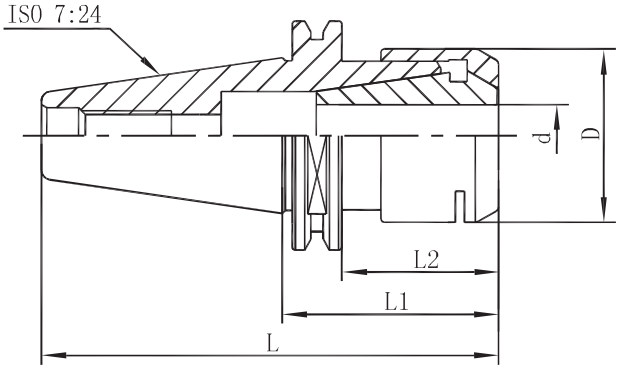

- 装入筒夹和更换刀具，必须把螺帽和本体螺纹清理干净，并添加润滑脂，否则会造成螺纹损坏
- Into the collet and replacement of cutting tools, must clean up the thread of nut and ontology, and add grease, otherwise it will cause damage to the screw thread

mm

订货编号		L	L1	L2	D	d (夹持范围)
ISO20	ER16-35MS	68.3	35	26.2	22	1 ~ 10
ISO25	ER16-35MS	74.7	35	26.2	22	1 ~ 10
	ER20-35MS	74.7	35	26.2	28	1 ~ 13
ISO30	ER16-60MS	107.8	60	40.9	22	1 ~ 10
	ER20-60MS	107.8	60	40.9	28	1 ~ 13
	ER25-42MS	89.8	42	22.9	35	3 ~ 16

LJ0201-0004
GER 夹头刀柄
COLLET CHUCK

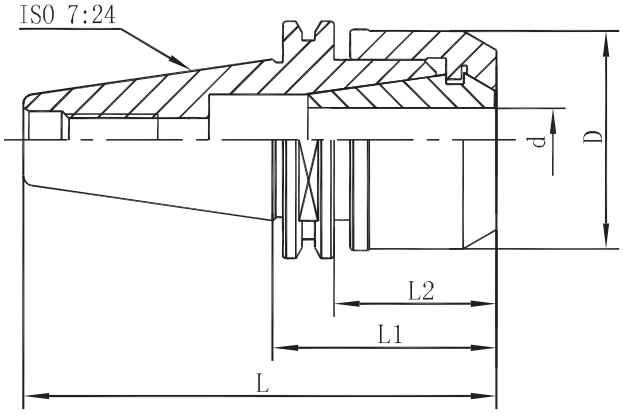

- 装入筒夹和更换刀具，必须把螺帽和本体螺纹清理干净，并添加润滑脂，否则会造成螺纹损坏
- 全圆无偏心螺帽设计，噪音低、风阻小，适合高速
- Into the collet and replacement of cutting tools, must clean up the thread of nut and ontology, and add grease, otherwise it will cause damage to the screw thread
- Full circle – no eccentric nut design, low noise, small wind resistance, suitable for high speed

mm

订货编号		L	L1	L2	D	d (夹持范围)
ISO20	GER16–35	68.3	35	26.2	22	1 ~ 10
ISO25	GER16–35	74.7	35	26.2	22	1 ~ 10
	GER20–35	74.7	35	26.2	28	1 ~ 13
ISO30	GER16–60	107.8	60	40.9	22	1 ~ 10
	GER20–60	107.8	60	40.9	28	1 ~ 13
	GER32–42	89.8	42	22.9	48	3 ~ 20
	GER32–60	107.8	60	40.9	48	3 ~ 20

LJ0201-0006
GSK 夹头刀柄
COLLET CHUCK

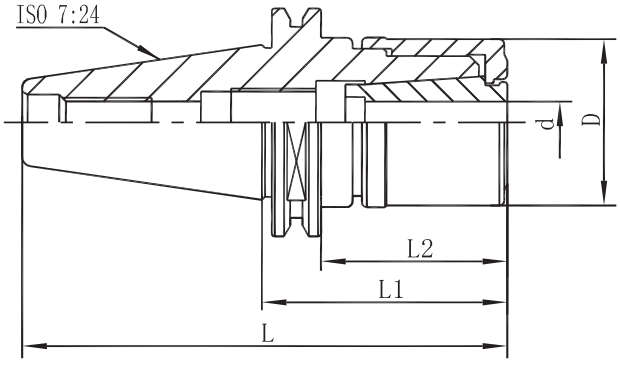

- 筒夹采用单边4° 设计，重复装夹精度更高
- 全圆螺帽设计，噪音低、风阻小，适合高速
- The design uses 4 deg collet clamp unilateral, high precision repeat loading
- All – round nut design, low noise, small wind resistance, suitable for high speed

mm

订货编号		L	L1	L2	D	d (夹持范围)
ISO20	GSK10–40	73.3	40	31.2	27.5	3 ~ 10
ISO25	GSK10–40	79.7	40	31.2	27.5	3 ~ 10
ISO30	GSK10–60	107.8	60	40.9	27.5	3 ~ 10
	GSK16–60	107.8	60	40.9	40.5	3 ~ 16

LJ0301-0002
ER 夹头刀柄
COLLET CHUCK

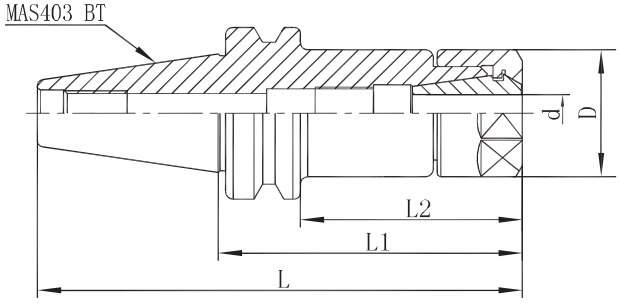

- 装入筒夹和更换刀具，必须把螺帽和本体螺纹清理干净，并添加润滑脂，否则会造成螺纹损坏
- 装置时筒夹必须先置入螺帽，再装入刀具，接着锁固本体
- 刀具置入筒夹内孔，必需超出筒夹有效夹持长度，避免不当锁固，造成损坏
- A collet and replacement of cutting tools, screw nut and body must be clean, and add grease, Otherwise it will cause damage to the thread
- The device must be placed when the collet nut, and then into the tool, then the lock body
- The placement tool collet hole, clamping collet must exceed effective length, to avoid improper locking dama

mm

订货编号		L	L1	L2	D	d (夹持范围)
NBT30	ER16–60	108.4	60	38	28	1 ~ 10
	ER20–60	108.4	60	38	34	1 ~ 13
	ER25–60	108.4	60	38	42	3 ~ 16
	ER32–60	108.4	60	38	50	3 ~ 20
	ER16–70	118.4	70	48	28	1 ~ 10
	ER20–70	118.4	70	48	34	1 ~ 13
	ER25–70	118.4	70	48	42	3 ~ 16
	ER32–70	118.4	70	48	50	3 ~ 20

LJ0301-0004
GER 夹头刀柄
COLLET CHUCK

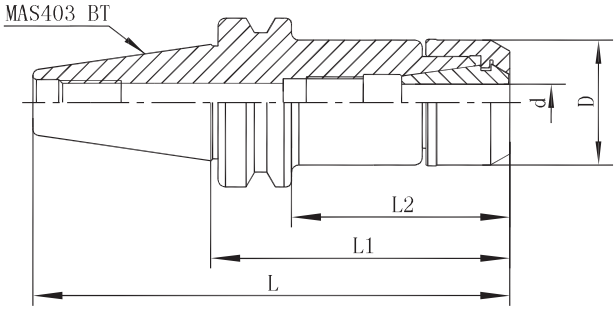

- 装入筒夹和更换刀具，必须把螺帽和本体螺纹清理干净，并添加润滑脂，否则会造成螺纹损坏
- 全圆无偏心螺帽设计，噪音低、风阻小，适合高速
- Into the collet and replacement of cutting tools, must clean up the thread of nut and ontology, and add grease, otherwise it will cause damage to the screw thread
- Full circle – no eccentric nut design, low noise, small wind resistance, suitable for high speed

mm

订货编号		L	L1	L2	D	d (夹持范围)
NBT30	GER16–70	118.4	70	48	27.5	1 ~ 10
	GER20–70	118.4	70	48	30.5	1 ~ 13
	GER25–70	118.4	70	48	35.5	3 ~ 16
	GER32–70	118.4	70	48	48.5	3 ~ 20

LJ0301-0006
GSK 夹头刀柄
COLLET CHUCK

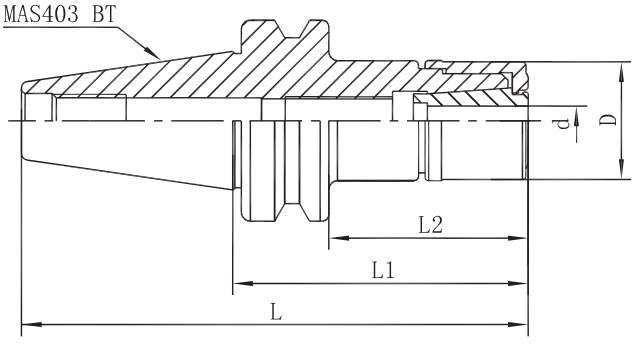

- 筒夹采用单边4° 设计，重复装夹精度更高
- 全圆螺帽设计，噪音低、风阻小，适合高速
- The design uses 4 deg collet clamp unilateral, high precision repeat loading
- All – round nut design, low noise, small wind resistance, suitable for high speed

mm

订货编号		L	L1	L2	D	d (夹持范围)
NBT30	GSK10–60	108.4	60	38	27.5	3 ~ 10
	GSK16–60	108.4	60	38	40.5	3 ~ 16

REVEN
Tools & Carbide

LJ0302-0002
SDC 夹头刀柄
COLLET CHUCK

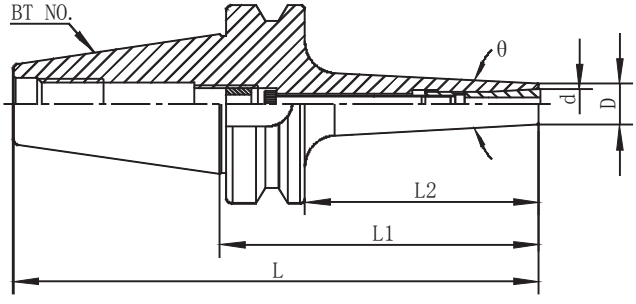

- 无螺帽的后拉式筒夹设计，刚性强稳定性高
- 建议使用扭力扳手，不要超过推荐值的30%，过高的扭力，可能导致刀柄的变形
- Collet nut design – no pull, strong stability and high rigidity
- The recommended torque wrench, do not exceed the recommended value of 30%, high torque, the deformation may lead

mm

订货编号		L	L1	L2	θ	D	d（夹持范围）
BT30	SDC06–60	1084	60	38	6°	14	3～6
	SDC06–90	138.4	90	68	6°	14	3～6
	SDC08–60	108.4	60	38	6°	22	3～8
	SDC08–90	138.4	90	68	6°	22	3～8
	SDC12–80	128.4	80	58	—	34	3～12
BT40	SDC06–90	155.4	090	63	6°	14	3～6
	SDC06–150	215.4	150	123	6°	14	3～6
	SDC08–90	165.4	090	63	6°	22	3～8
	SDC08–150	215.4	150	123	6°	22	3～8
	SDC12–90	165.4	090	63	—	34	3～12
	SDC12–150	215.4	150	123	—	34	3～12
BT50	SDC06–100	201.8	100	62	6°	14	3～6
	SDC06–150	251.8	150	112	6°	14	3～6
	SDC08–100	201.8	100	62	6°	22	3～8
	SDC08–150	251.8	150	112	6°	22	3～8
	SDC12–100	201.8	100	62	—	34	3～12
	SDC12–150	251.8	150	112	—	34	3～12

LJ0302-0004
GSK 夹头刀柄
COLLET CHUCK

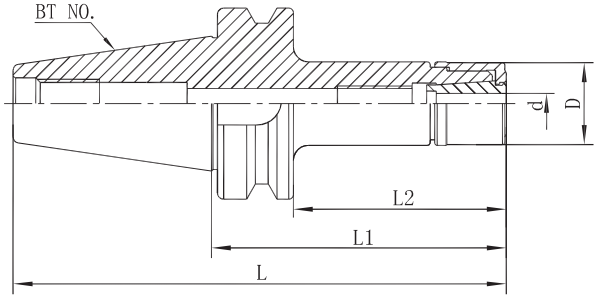

- 筒夹采用单边4° 设计，重复装夹精度更高
- 全圆螺帽设计，噪音低、风阻小，适合高速
- The design uses 4 Deg collet clamp unilateral, high precision repeat loading
- All – round nut design, low noise, small wind resistance, suitable for high speed

mm

订货编号		L	L1	L2	D	d (夹持范围)
BT30	GSK06–60	108.4	60	38	19.5	2 ~ 6
	GSK06–90	138.4	90	68	19.5	2 ~ 6
	GSK10–60	108.4	60	38	27.5	3 ~ 10
	GSK10–90	138.4	90	68	27.5	3 ~ 10
	GSK13–60	108.4	60	38	35.5	3 ~ 13
	GSK13–90	138.4	90	68	35.5	3 ~ 13
	GSK16–60	108.4	60	38	40.5	3 ~ 16
	GSK16–90	138.4	90	68	40.5	3 ~ 16
BT40	GSK10–60	125.4	60	33	27.5	3 ~ 10
	GSK10–90	155.4	90	63	27.5	3 ~ 10
	GSK13–60	125.4	60	33	35.5	3 ~ 13
	GSK13–90	155.4	90	63	35.5	3 ~ 13
	GSK16–60	125.4	60	33	40.5	3 ~ 16
	GSK16–90	155.4	90	63	40.5	3 ~ 16
	GSK20–70	135.4	70	43	48.5	3 ~ 20
	GSK20–90	155.4	90	63	48.5	3 ~ 20
BT50	GSK10–100	201.8	100	62	27.5	3 ~ 10
	GSK10–150	251.8	150	112	27.5	3 ~ 10
	GSK13–100	201.8	100	62	35.5	3 ~ 13
	GSK13–150	251.8	150	112	35.5	3 ~ 13
	GSK16–100	201.8	100	62	40.5	3 ~ 16
	GSK16–150	251.8	150	112	40.5	3 ~ 16
	GSK20–100	201.8	100	62	48.5	3 ~ 20
	GSK20–150	251.8	150	112	48.5	3 ~ 20
	GSK25–100	201.8	100	62	55.5	3 ~ 25
	GSK25–150	251.8	150	112	55.5	3 ~ 25

REVEN
Tools & Carbide

LJ0302-0006
ER 夹头刀柄
COLLET CHUCK

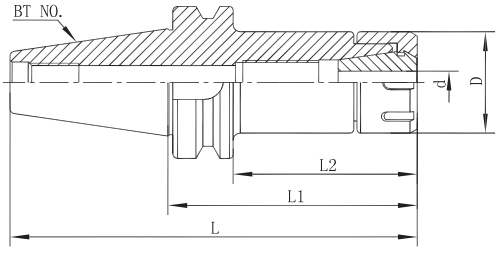

- 装入筒夹和更换刀具，必须把螺帽和本体螺纹清理干净，并添加润滑脂，否则会造成螺纹损坏
- 装夹时筒夹必须先置入螺帽，再装入刀具，接着锁紧本体
- A collet and replacement of cutting tools, screw nut and body must be clean, and add grease, Otherwise it will cause damage to the thread
- The device must be placed when the collet nut, and then into the tool, then the lock body

mm

订货编号		L	L1	L2	D	d (夹持范围)
BT30	ER11–70	118.4	70	48	19	1～7
	ER11–100	148.4	100	78	19	1～7
	ER16–70	118.4	70	48	28	1～10
	ER16–100	148.4	100	78	28	1～10
	ER20–70	118.4	70	48	34	1～13
	ER20–100	148.4	100	78	34	1～13
	ER25–70	118.4	70	48	42	3～16
	ER25–100	148.4	100	78	42	3～16
	ER32–70	118.4	70	48	50	3～20
	ER32–100	148.4	100	78	50	3～20
BT40	ER16–70	135.4	70	43	28	1～10
	ER16–100	165.4	100	73	28	1～10
	ER16–150	215.4	150	123	28	1～10
	ER20–70	135.4	70	43	34	1～13
	ER20–100	165.4	100	73	34	1～13
	ER20–150	215.4	150	123	34	1～13
	ER25–70	135.4	70	43	42	3～16
	ER25–100	165.4	100	73	42	3～16
	ER25–150	215.4	150	123	42	3～16
	ER32–70	135.4	70	43	50	3～20
	ER32–100	165.4	100	73	50	3～20
	ER32–150	215.4	150	123	50	3～20
	ER40–80	145.4	80	53	63	3～26
	ER40–100	165.4	100	73	63	3～26
BT50	ER16–100	201.8	100	62	28	1～10
	ER16–150	251.8	150	112	28	1～10
	ER20–100	201.8	100	62	34	1～13
	ER20–150	251.8	150	112	34	1～13
	ER25–100	201.8	100	62	42	3～16
	ER25–150	251.8	150	112	42	3～16
	ER32–100	201.8	100	62	50	3～20
	ER32–150	251.8	150	112	50	3～20
	ER40–100	201.8	100	62	63	3～26
	ER40–150	251.8	150	112	63	3～26

LJ0302-0008
GER 夹头刀柄
COLLET CHUCK

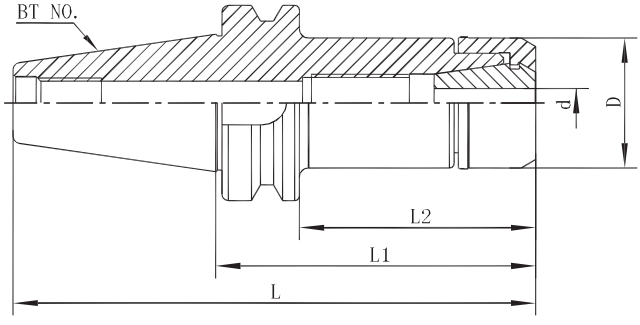

- 装入筒夹和更换刀具，必须把螺帽和本体螺纹清理干净，并添加润滑脂，否则会造成螺纹损坏
- 全圆无偏心螺帽设计，噪音低、风阻小，适合高速
- Into the collet and replacement of cutting tools, must clean up the thread of nut and ontology, and add grease, otherwise it will cause damage to the screw thread
- Full circle – no eccentric nut design, low noise, small wind resistance, suitable for high speed

mm

订货编号		L	L1	L2	D	d (夹持范围)
BT30	GER16–70	118.4	70	48	27.5	1 ~ 10
	GER16–100	148.4	100	78	27.5	1 ~ 10
	GER20–70	118.4	70	48	30.5	1 ~ 13
	GER20–100	148.4	100	78	30.5	1 ~ 13
	GER25–70	118.4	70	48	35.5	3 ~ 16
	GER25–100	148.4	100	78	35.5	3 ~ 16
BT40	GER16–70	135.4	70	43	27.5	1 ~ 10
	GER16–100	165.4	100	73	27.5	1 ~ 10
	GER20–70	135.4	70	43	30.5	1 ~ 13
	GER20–100	165.4	100	73	30.5	1 ~ 13
	GER25–70	135.4	70	43	35.5	3 ~ 16
	GER25–100	165.4	100	73	35.5	3 ~ 16
	GER32–70	135.4	70	43	48.5	3 ~ 20
	GER32–100	165.4	100	73	48.5	3 ~ 20

REVEN
Tools & Carbide

LJ0302-0010
FMA 面铣刀柄
FACE MILL ARBOR

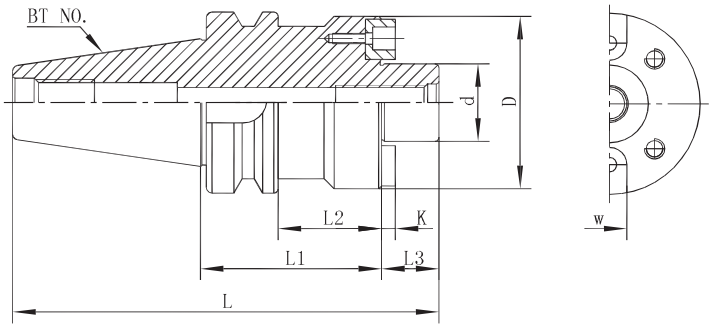

- 平面铣刀配合部位（d）轴系公差h6
- The face milling cutter with parts (d) shaft tolerance h6

mm

订货编号		L	L1	L2	L3	d	D	K	W
BT30	FMA25.4-60	128.4	60	38	20	25.4	50	4.52	9.52
BT40	FMA25.4-60	145.4	60	33	20	25.4	50	4.52	9.52
	FMA31.75-60	147.4	60	33	22	31.75	60	6.7	12.7
	FMA38.1-60	150.4	60	33	25	38.1	73	8.87	15.87
BT50	FMA25.4-60	181.8	60	22	20	25.4	50	4.52	9.52
	FMA25.4-100	241.8	100	62	20	25.4	50	4.52	9.52
	FMA25.4-150	291.8	150	112	20	25.4	50	4.52	9.52
	FMA31.75-60	183.8	60	22	22	31.75	60	6.7	12.7
	FMA31.75-100	243.8	100	62	22	31.75	60	6.7	12.7
	FMA31.75-150	293.8	150	112	22	31.75	60	6.7	12.7
	FMA38.1-60	186.8	60	22	25	38.1	80	8.87	15.87
	FMA38.1-100	246.8	100	62	25	38.1	80	8.87	15.87
	FMA50.8-75	212.8	75	37	36	50.8	98	9.75	19.05
	FMA47.625-75	201.8	75	37	25	47.625	128.75	12.5	25.4

LJ0302-0012
FMB 面铣刀柄
FACE MILL ARBOR

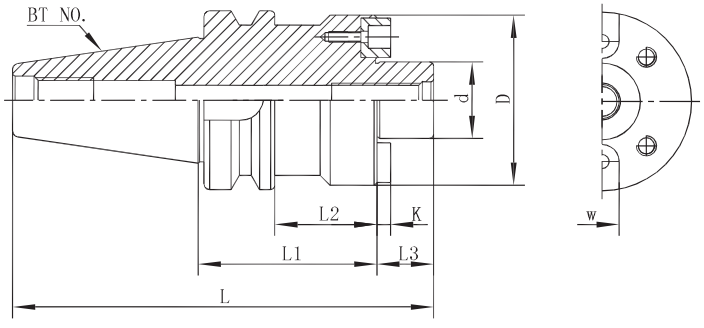

- 平面铣刀配合部位（d）轴系公差h6
- The face milling cutter with parts (d) shaft tolerance h6

mm

订货编号		L	L1	L2	L3	d	D	K	W
BT30	FMB22-45	111.4	45	23	18	22	48	4.8	10
	FMB22-60	126.4	60	38	18	22	48	4.8	10
	FMB27-45	113.4	45	23	20	27	60	5.8	12
	FMB27-60	128.4	60	38	20	27	60	5.8	12
BT40	FMB22-45	128.4	45	18	18	22	48	4.8	10
	FMB22-60	143.4	60	33	18	22	48	4.8	10
	FMB22-100	183.4	100	73	18	22	48	4.8	10
	FMB27-60	145.4	60	33	20	27	60	5.8	12
	FMB32-60	147.4	60	33	22	32	63	6.8	14
	FMB40-60	150.4	60	33	25	40	73	8.3	16
BT50	FMB22-100	219.8	100	62	18	22	48	4.8	10
	FMB22-150	269.8	150	112	18	22	48	4.8	10
	FMB27-60	181.8	60	22	20	27	60	5.8	12
	FMB27-100	221.8	100	62	20	27	60	5.8	12
	FMB32-60	183.8	60	22	22	32	78	6.8	14
	FMB32-100	223.8	100	62	22	32	78	6.8	14
	FMB40-60	186.8	60	22	25	40	85	8.3	16
	FMB40-100	226.8	100	62	25	40	85	8.3	16
	FMB40F-75	202.8	75	37	26	40	98	8.3	16
	FMB60-75	201.8	75	37	25	60	128.75	12.5	25.4

REVEN
Tools & Carbide

LJ0302-0014
FMB 加长面铣刀柄
FACE MILL ARBOR

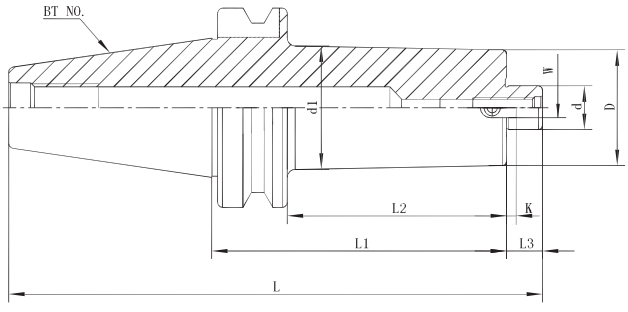

● 平面铣刀配合部位（d）轴系公差h6
● The face milling cutter with parts (d) shaft tolerance h6

mm

订货编号		L	L1	L2	L3	d	d1	D	K	W
BT50	FMB22-100	219.8	100	62	18	22	61.5	58	4.8	10
	FMB22-150	269.8	150	112	18	22	61.5	58	4.8	10
	FMB22-200	319.8	200	162	18	22	61.5	58	4.8	10
	FMB22-250	369.8	250	212	18	22	61.5	58	4.8	10
	FMB22-300	419.8	300	262	18	22	61.5	58	4.8	10
	FMB22-350	469.8	350	312	18	22	61.5	58	4.8	10
	FMB22-400	519.8	400	362	18	22	61.5	58	4.8	10
	FMB22-450	569.8	450	412	18	22	61.5	58	4.8	10
	FMB22-500	619.8	500	462	18	22	61.5	58	4.8	10
	FMB22-550	669.8	550	512	18	22	61.5	58	4.8	10
	FMB22-600	719.8	600	562	18	22	61.5	58	4.8	10

LJ0302-0016
APU 一体式钻夹头刀柄
KEYLESS DRILL CHUCK

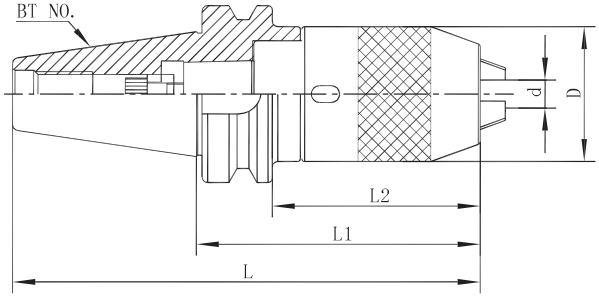

- 刀柄和夹头结合为一体，即使作重切屑加工，夹头也不会脱落
- 操作容易、快速方便、安全性高、夹持牢固
- The handle and the chuck is combined, even for heavy cutting processing, chuck will not fall off
- Fast, easy operation, high safety

mm

订货编号		L	L1	D	d (夹持范围)
BT30	APU08-80	128.4	80	38	1 ~ 8
	APU13-100	148.4	100	50	1 ~ 13
BT40	APU08-80	145.4	80	38	1 ~ 8
	APU13-110	175.4	110	50	1 ~ 13
	APU16-110	175.4	110	58	3 ~ 16
BT50	APU13-120	221.8	120	50	1 ~ 13
	APU13-180	281.8	180	50	1 ~ 13
	APU16-120	221.8	120	58	3 ~ 16
	APU16-180	281.8	180	58	3 ~ 16

REVEN
Tools & Carbide

LJ0302-0018
MTA 莫氏锥度刀柄
MORSE TAPER HOLDER

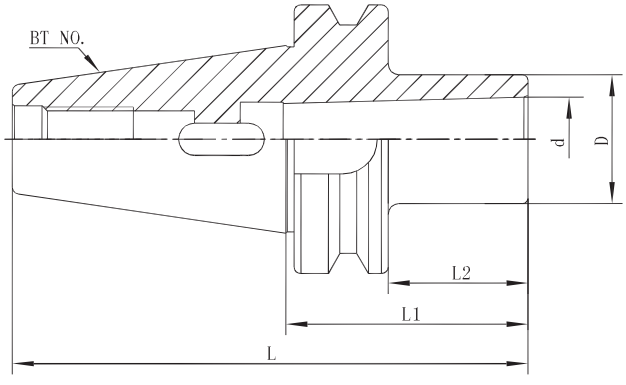

- 用于带莫氏锥度的钻头等刀具、装卸刀具时间短、容易操作
- For Morse taper drill tool, tool handling time is short, easy to operate

mm

订货编号		L	L1	L2	D	d
BT30	MTA1-45	93.4	45	23	25	12.065
	MTA2-60	108.4	60	38	32	17.78
	MTA3-75	118.4	75	53	40	23.825
BT40	MTA1-45	110.4	45	18	25	12.065
	MTA1-120	185.4	120	93	25	12.065
	MTA2-60	125.4	60	33	32	17.78
	MTA2-120	185.4	120	93	32	17.78
	MTA3-75	140.4	75	48	40	23.825
	MTA3-135	200.4	135	108	40	23.825
	MTA4-95	160.4	95	68	50	31.267
	MTA4-165	230.4	165	138	50	31.267
BT50	MTA1-45	146.8	45	7	25	12.065
	MTA1-120	221.8	120	82	25	12.065
	MTA2-60	161.8	60	22	32	17.78
	MTA2-135	236.8	135	97	32	17.78
	MTA3-75	176.8	75	37	40	23.825
	MTA3-150	251.7	150	112	40	23.825
	MTA4-90	191.8	90	52	50	31.267
	MTA4-180	281.8	180	142	50	31.267
	MTA5-105	206.8	105	67	63	44.399

LJ0302-0020
MTB 莫氏锥度刀柄
MORSE TAPER HOLDER

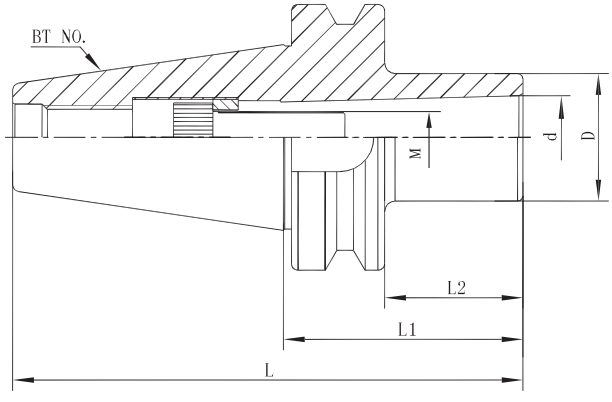

- 用于夹持莫氏锥度尾端有内螺纹的切削刀具或加长杆
- It is used for clamping the Morse taper at the end cutting internal threads or extension rod

mm

订货编号		L	L1	L2	M	D	d
BT40	MTB1–45	110.4	45	18	M6 × 1.0P	25	12.065
	MTB2–60	125.4	60	33	M10 × 1.5P	32	17.780
	MTB3–75	140.4	75	48	M12 × 1.75P	40	23.825
	MTB4–95	160.4	95	68	M16 × 2.0P	50	31.267
BT50	MTB1–45	146.8	45	7	M6 × 1.0P	25	12.065
	MTB2–60	161.8	60	22	M10 × 1.5P	32	17.780
	MTB2–135	236.8	135	97	M10 × 1.5P	32	17.780
	MTB3–75	176.8	75	37	M12 × 1.75P	40	23.825
	MTB3–150	251.7	150	112	M12 × 1.75P	40	23.825
	MTB4–90	191.8	90	52	M16 × 2.0P	50	31.267
	MTB4–180	281.8	180	142	M16 × 2.0P	50	31.267
	MTB5–105	206.8	105	67	M20 × 2.5P	70	44.399

REVEN
Tools & Carbide

LJ0302-0022
SLN 侧固式刀柄
SIDE LOCK HOLDER

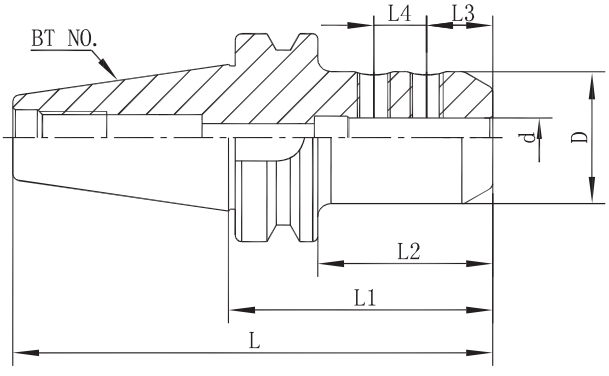

- 夹持孔径公差H5
- Φ20以内一只锁紧螺钉，Φ25以上两只锁固螺钉
- The clamping hole tolerance H5
- With less than 20 mm a locking screw, with a diameter of 25 mm above two locking screw.

mm

订货编号		L	L1	L2	L3	L4	D	d
BT40	SLN06-50	115.4	50	23	18	—	25	6
	SLN08-50	115.4	50	23	18	—	28	8
	SLN10-63	128.4	63	36	20	—	35	10
	SLN12-63	128.4	63	36	22.5	—	42	12
	SLN16-63	128.4	63	36	24	—	48	16
	SLN20-63	128.4	63	36	25	—	52	20
	SLN25-100	165.4	100	73	24	25	57	25
	SLN32-100	165.4	100	73	24	28	63	32
BT50	SLN06-63	164.8	63	25	18	—	25	6
	SLN08-63	164.8	63	25	18	—	28	8
	SLN10-80	181.8	80	42	20	—	35	10
	SLN12-80	181.8	80	42	22.5	—	42	12
	SLN16-80	181.8	80	42	24	—	48	16
	SLN20-80	181.8	80	42	25	—	52	20
	SLN25-100	201.8	100	62	24	25	57	25
	SLN32-105	206.8	105	67	24	28	63	32
	SLN40-115	216.8	115	77	30	32	72	40
	SLN42-120	221.8	120	82	30	32	75	42

LJ0302-0024
SLN 侧固式刀柄（JIS型）
SIDE LOCK HOLDER (JIS)

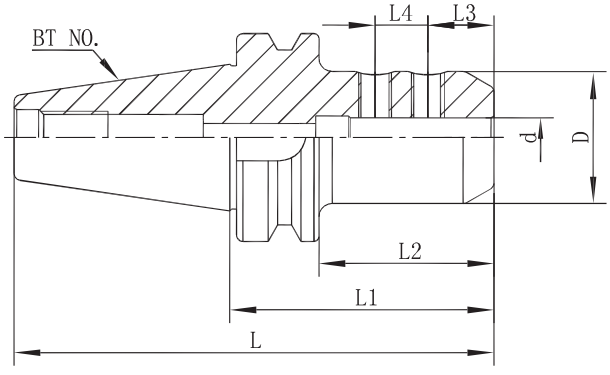

- 夹持孔径公差H5
- 不分孔径皆为两只锁紧螺钉
- The clamping hole tolerance H5
- Regardless of aperture are two locking screw

mm

订货编号		L	L1	L2	L3	L4	D	d
BT40	SLN06-75	140.4	75	48	12	10	25	6
	SLN08-75	140.4	75	48	14	12	28	8
	SLN10-75	140.4	75	48	15	14	35	10
	SLN12-75	140.4	75	48	20	16	42	12
	SLN16-75	140.4	75	48	22	18	48	16
	SLN20-90	155.4	90	63	25	20	52	20
	SLN25-100	165.4	100	73	24	25	57	25
	SLN32-100	165.4	100	73	24	28	63	32
	SLN40-105	170.4	105	78	30	32	74	40
BT50	SLN06-75	176.8	75	37	12	10	25	6
	SLN08-75	176.8	75	37	14	12	28	8
	SLN10-105	206.8	105	67	15	14	35	10
	SLN12-105	206.8	105	67	20	16	42	12
	SLN16-105	206.8	105	67	22	18	48	16
	SLN20-105	206.8	105	67	25	20	52	20
	SLN25-105	206.8	105	67	24	25	57	25
	SLN32-105	206.8	105	67	24	28	63	32
	SLN40-115	216.8	115	77	30	32	72	40
	SLN42-120	221.8	120	82	30	32	75	42
	SLN50-120	221.8	120	82	35	35	82	50
	SLN50.8-120	221.8	120	82	33.9	35.78	82	50.8

REVEN
Tools & Carbide

LJ0302-0026
LTM 螺纹锁固刀柄
SCREWED END MILL HOLDER

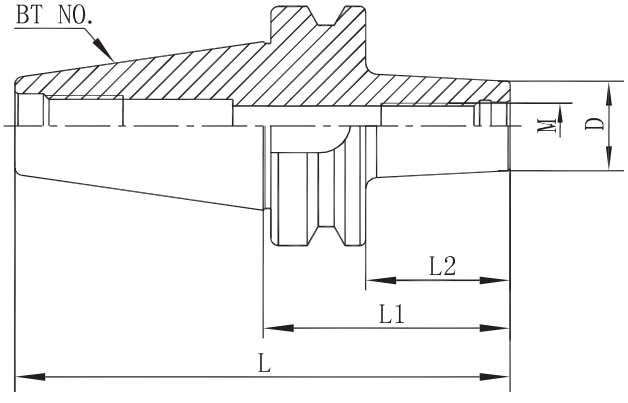

- 刀头的多种选择增大刀柄的使用范围，通孔利于减震、出水
- Many knife head use increases the range of handle, a through hole for damping and water

mm

订货编号		L	L1	L2	D	M
BT30	LTM6–45	93.4	60	38	13	M6 × 1.0P
	LTM8–45	93.4	60	38	15	M8 × 1.25P
	LTM10–45	93.4	60	38	19	M10 × 1.5P
	LTM12–45	93.4	60	38	24	M12 × 1.75P
	LTM16–45	93.4	60	38	29	M16 × 2.0P
BT40	LTM6–60	125.4	60	33	13	M6 × 1.0P
	LTM6–100	165.4	100	73	13	M6 × 1.0P
	LTM8–60	125.4	60	33	15	M8 × 1.25P
	LTM8–100	165.4	100	73	15	M8 × 1.25P
	LTM10–60	125.4	60	33	19	M10 × 1.5P
	LTM10–100	165.4	100	73	19	M10 × 1.5P
	LTM12–60	125.4	60	33	24	M12 × 1.75P
	LTM12–100	165.4	100	73	24	M12 × 1.75P
	LTM16–60	125.4	60	33	29	M16 × 2.0P
	LTM16–100	165.4	100	73	29	M16 × 2.0P
BT50	LTM8–100	201.8	100	62	15	M8 × 1.25P
	LTM10–100	201.8	100	62	19	M10 × 1.5P
	LTM12–100	201.8	100	62	24	M12 × 1.75P
	LTM16–100	201.8	100	62	29	M16 × 2.0P

LJ0302-0028
HCK 精镗头刀柄
FINE BORING HEAD HOLDER

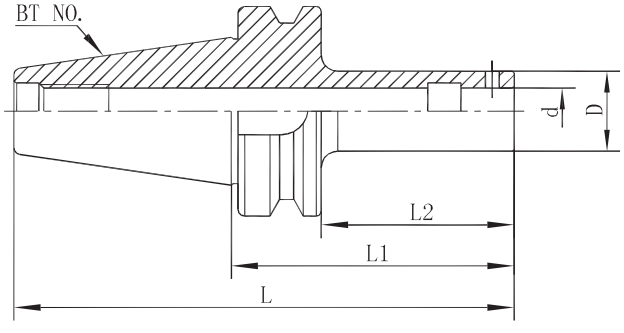

- 夹持孔径公差H6
- 固定螺丝30° 设计锁紧时，可将镗头向主轴方向拉引，使镗头的端面与刀杆完全贴合
- 只需使用六角扳手锁紧，操作简单、精确稳固
- The clamping hole tolerance H6
- Screw 30 degrees design locking can be plug to the spindle direction of the pull head, the end face lined with a knife bar fit completely
- Just use six angle wrench locking, simple operation, accurate and stable

mm

订货编号		L	L1	L2	D	d
BT40	HCK1-100	165.4	100	73	19	11
	HCK2-75	140.4	75	48	23.5	14
	HCK3-80	145.4	80	53	31	18
	HCK4-100	165.4	100	73	39	22
	HCK5-80	145.4	80	53	50	28
	HCK6-55	120.4	55	28	63	36
BT50	HCK1-125	226.8	125	87	19	11
	HCK2-135	236.8	135	97	23.5	14
	HCK3-140	241.8	140	102	31	18
	HCK4-160	261.8	160	122	39	22
	HCK5-165	266.8	165	127	50	28
	HCK6-155	256.8	155	117	63	36

REVEN
Tools & Carbide

LJ0302-0030
HLC 强力型刀柄
POWER MILLING CHUCK

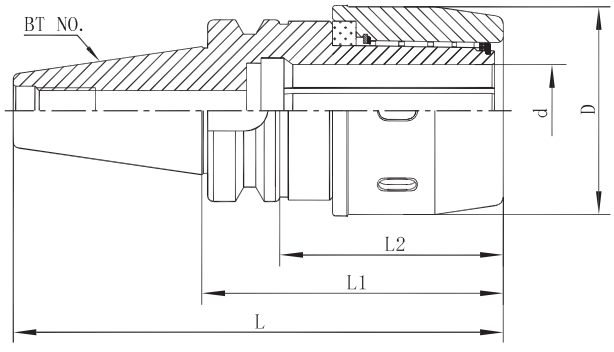

- 刀柄夹持孔6槽设计防止滑动增大加持力
- 滚针轴承设计，加持力大，用于重切屑
- Handle clamping hole 6 to prevent sliding groove design increases the blessing
- The design of needle roller bearings, the blessing, for heavy cutting

mm

订货编号		L	L1	L2	D	d (夹持范围)
BT40	MLC32-105	170.4	105	78	73	6～32
	MLC32-135	200.4	135	108	73	6～32
BT50	MLC32-110	211.8	110	72	73	6～32
	MLC32-150	251.8	150	112	73	6～32

LJ0303-0002
双面拘束 ER 夹头刀柄
COLLET CHUCK

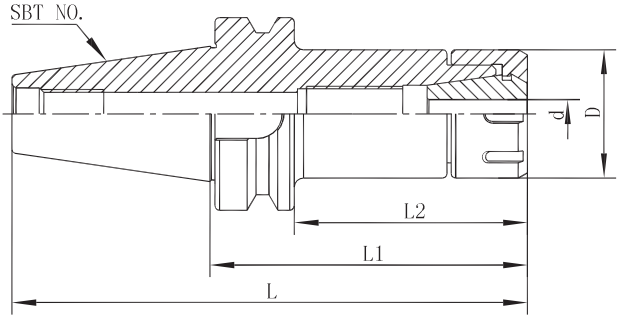

- 双面拘束增加刚性减少震动，大幅提高加工能力和精度，延长刀具寿命
- The double bound to increase rigidity to reduce the vibration, greatly improve the machining capability and precision, prolong tool life

mm

订货编号		L	L1	L2	D	d (夹持范围)
BBT30	ER11–70	118.4	70	48	19	1～7
	ER11–100	148.4	100	78	19	1～7
	ER16–70	118.4	70	48	28	1～10
	ER16–100	148.4	100	78	28	1～10
	ER20–70	118.4	70	48	34	1～13
	ER20–100	148.4	100	78	34	1～13
	ER25–70	118.4	70	48	42	3～16
	ER25–100	148.4	100	78	42	3～16
	ER32–70	118.4	70	48	50	3～20
	ER32–100	148.4	100	78	50	3～20
BBT40	ER16–70	135.4	70	43	28	1～10
	ER16–100	165.4	100	73	28	1～10
	ER16–150	215.4	150	123	28	1～10
	ER20–70	135.4	70	43	34	1～13
	ER20–100	165.4	100	73	34	1～13
	ER20–150	215.4	150	123	34	1～13
	ER25–70	135.4	70	43	42	3～16
	ER25–100	165.4	100	73	42	3～16
	ER25–150	215.4	150	123	42	3～16
	ER32–70	135.4	70	43	50	3～20
	ER32–100	165.4	100	73	50	3～20
	ER32–150	215.4	150	123	50	3～20
	ER40–80	145.4	80	53	63	3～26
	ER40–100	165.4	100	73	63	3～26
BBT50	ER16–100	201.8	100	62	28	1～10
	ER16–150	251.8	150	112	28	1～10
	ER20–100	201.8	100	62	34	1～13
	ER20–150	251.8	150	112	34	1～13
	ER25–100	201.8	100	62	42	3～16
	ER25–150	251.8	150	112	42	3～16
	ER32–100	201.8	100	62	50	3～20
	ER32–150	251.8	150	112	50	3～20
	ER40–100	201.8	100	62	63	3～26
	ER40–150	251.8	150	112	63	3～26

REVEN
Tools & Carbide

LJ0303-0004
双面拘束 FMB 面铣刀柄
FACE MILL ARBOR

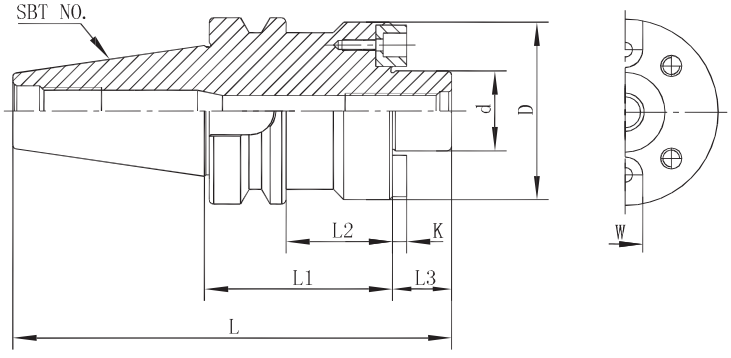

- 双面拘束增加刚性减少震动，大幅提高加工能力和精度，延长刀具寿命
- The double bound to increase rigidity to reduce the vibration, greatly improve the machining capability and precision, prolong tool life

mm

订货编号		L	L1	L2	L3	d	D	K	W
BBT30	FMB22-45	111.4	45	23	18	22	48	4.8	10
	FMB22-60	126.4	60	38	18	22	48	4.8	10
	FMB27-45	113.4	45	23	20	27	60	5.8	12
	FMB27-60	128.4	60	38	20	27	60	5.8	12
BBT40	FMB22-45	128.4	45	18	18	22	48	4.8	10
	FMB22-60	143.4	60	33	18	22	48	4.8	10
	FMB22-100	183.4	100	73	18	22	48	4.8	10
	FMB27-60	145.4	60	33	20	27	60	5.8	12
	FMB32-60	147.4	60	33	22	32	63	6.8	14
	FMB40-60	150.4	60	33	25	40	73	8.3	16
BBT50	FMB22-100	219.8	100	62	18	22	48	4.8	10
	FMB22-150	269.8	150	112	18	22	48	4.8	10
	FMB27-60	181.8	60	22	20	27	60	5.8	12
	FMB27-100	221.8	100	62	20	27	60	5.8	12
	FMB32-60	183.8	60	22	22	32	78	6.8	14
	FMB32-100	223.8	100	62	22	32	78	6.8	14
	FMB40-60	186.8	60	22	25	40	85	8.3	16
	FMB40-100	226.8	100	62	25	40	85	8.3	16
	FMB40F-75	202.8	75	37	26	40	98	8.3	16
	FMB60-75	201.8	75	37	25	60	128.75	12.5	25.4

LJ0401-0002
ER 夹头刀柄
COLLET CHUCK

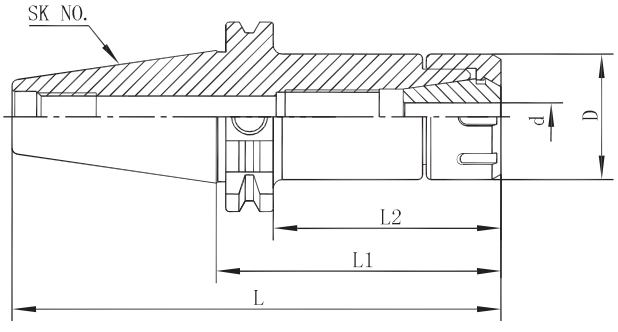

- 装入筒夹和更换刀具，必须把螺帽和本体螺纹清理干净，并添加润滑脂，否则会造成螺纹损坏
- 装置时筒夹必须先置入螺帽，再装入刀具，接着锁紧本体
- A collet and replacement of cutting tools, screw nut and body must be clean, and add grease, Otherwise it will cause damage to the thread
- The device must be placed when the collet nut, and then into the tool, then the lock body

mm

订货编号		L	L1	L2	D	d (夹持范围)
SK40	ER16–70	138.4	70	50.9	28	1 ~ 10
	ER16–100	168.4	100	80.9	28	1 ~ 10
	ER16–160	228.4	160	140.9	28	1 ~ 10
	ER20–70	138.4	70	50.9	34	1 ~ 13
	ER20–100	168.4	100	80.9	34	1 ~ 13
	ER20–160	228.4	160	140.9	34	1 ~ 13
	ER25–70	138.4	70	50.9	42	3 ~ 16
	ER25–100	168.4	100	80.9	42	3 ~ 16
	ER25–160	228.4	160	140.9	42	3 ~ 16
	ER32–70	138.4	70	50.9	50	3 ~ 20
	ER32–100	168.4	100	80.9	50	3 ~ 20
	ER32–160	228.4	160	140.9	50	3 ~ 20
	ER40–80	148.4	80	60.9	63	3 ~ 26
	ER40–100	168.4	100	80.9	63	3 ~ 26
SK50	ER16–100	201.75	100	80.9	28	1 ~ 10
	ER16–135	236.75	135	115.9	28	1 ~ 10
	ER20–100	201.75	100	80.9	34	1 ~ 13
	ER20–135	236.75	135	115.9	34	1 ~ 13
	ER25–100	201.75	100	80.9	42	3 ~ 16
	ER25–135	236.75	135	115.9	42	3 ~ 16
	ER32–100	201.75	100	80.9	50	3 ~ 20
	ER32–135	236.75	135	115.9	50	3 ~ 20
	ER32–160	261.75	160	140.9	50	3 ~ 20
	ER40–80	181.75	80	60.9	63	3 ~ 26
	ER40–120	221.75	120	100.9	63	3 ~ 26

LJ0401-0004
FMB 面铣刀柄
FACE MILL ARBOR

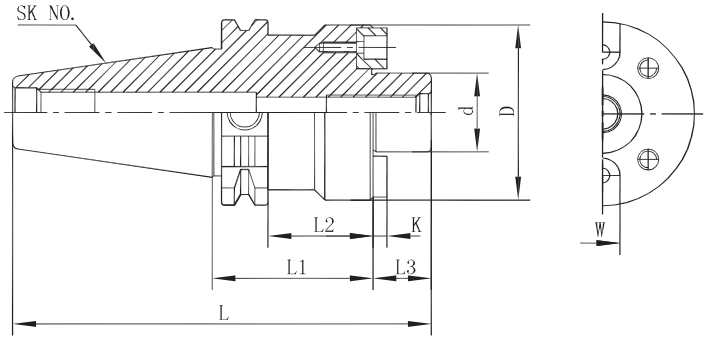

- 平面铣刀配合部位（d）轴系公差h6
- The face milling cutter with parts (d) shaft tolerance h6

mm

订货编号		L	L1	L2	L3	d	D	K	W
SK40	FMB22-40	126.4	40	20.9	18	22	48	4.8	10
	FMB22-100	186.4	100	80.9	18	22	48	4.8	10
	FMB27-60	148.4	60	40.9	20	27	60	5.8	12
	FMB32-60	150.4	60	40.9	22	32	63	6.8	14
	FMB40-60	153.4	60	40.9	25	40	73	8.3	16
SK50	FMB22-40	141.75	40	20.9	18	22	48	4.8	10
	FMB22-100	201.75	100	80.9	18	22	48	4.8	10
	FMB27-40	143.75	40	20.9	20	27	60	5.8	12
	FMB32-40	145.75	40	20.9	22	32	78	6.8	14
	FMB40-50	176.75	50	30.9	25	40	85	8.3	16

LJ0401-0006
SLN 侧固式刀柄
SIDE LOCK HOLDER

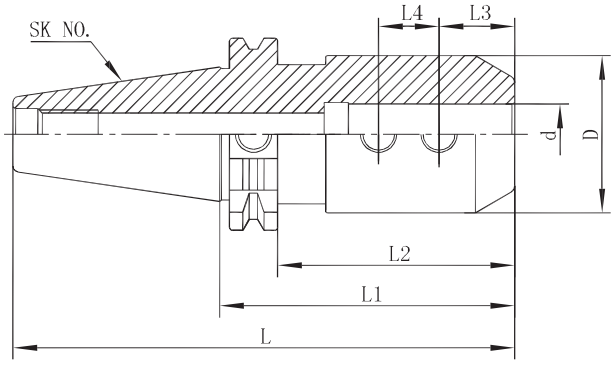

- 夹持孔径公差H5
- Φ20以内一只锁紧螺钉，Φ25以上两只锁紧螺钉
- The clamping hole tolerance H5
- With less than 20 mm a locking screw, with a diameter of 25 mm above two locking screw.

mm

订货编号		L	L1	L2	L3	L4	D	d
SK40	SLN06–50	118.4	50	30.9	18	—	25	6
	SLN08–50	118.4	50	30.9	18	—	28	8
	SLN10–50	118.4	50	30.9	20	—	35	10
	SLN12–50	118.4	50	30.9	22.5	—	42	12
	SLN16–63	131.4	63	43.9	24	—	48	16
	SLN20–63	131.4	63	43.9	25	—	52	20
	SLN25–100	168.4	100	80.9	24	25	65	25
	SLN32–100	168.4	100	80.9	24	28	72	32
SK50	SLN06–63	164.75	63	43.9	18	—	25	6
	SLN08–63	164.75	63	43.9	18	—	28	8
	SLN10–63	164.75	63	43.9	20	—	35	10
	SLN12–63	164.75	63	43.9	22.5	—	42	12
	SLN16–63	164.75	63	43.9	24	—	48	16
	SLN20–63	164.75	63	43.9	25	—	52	20
	SLN25–100	201.75	100	80.9	24	25	65	25
	SLN32–100	201.75	100	80.9	24	28	72	32
	SLN40–120	221.75	120	100.9	30	32	90	40
	SLN42–120	221.75	120	100.9	30	32	90	42

LJ0401-0008
MTA 莫氏锥度刀柄
MORSE TAPER HOLDER

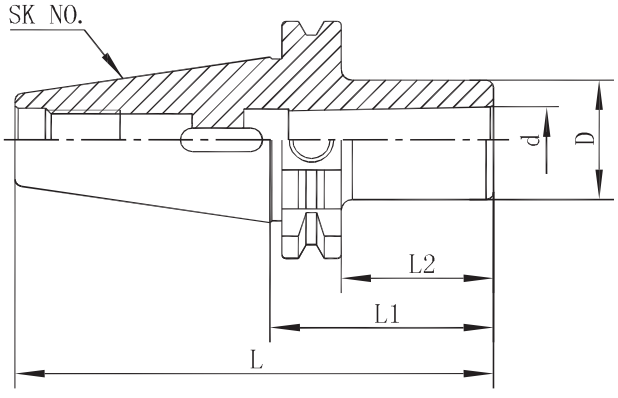

- 用于带莫氏锥度的钻头等刀具、装卸刀具时间短、容易操作
- For Morse taper drill tool, tool handling time is short, easy to operate

mm

订货编号		L	L1	L2	D	d
SK40	MTA1-45	113.4	45	25.9	25	12.065
	MTA2-60	128.4	60	40.9	32	17.780
	MTA3-75	143.4	75	55.9	40	23.825
	MTA4-95	163.4	95	75.9	50	31.267
SK50	MTA1-45	146.75	45	25.9	25	12.065
	MTA2-60	161.75	60	40.9	32	17.780
	MTA3-75	176.75	75	55.9	40	23.825
	MTA4-90	191.75	90	70.9	50	31.267
	MTA5-105	206.75	105	85.9	63	44.399

LJ0501-0002
ER 夹头刀柄
COLLET CHUCK

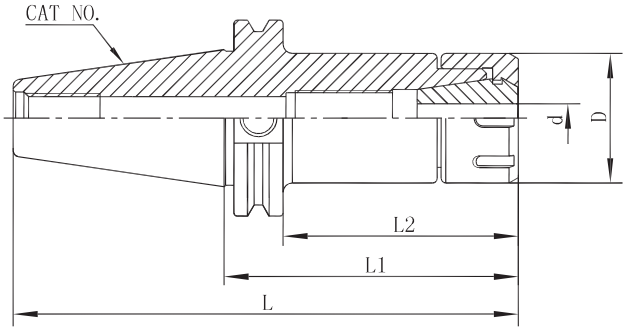

- 装入筒夹和更换刀具，必须把螺帽和本体螺纹清理干净，并添加润滑脂，否则会造成螺纹损坏
- 装置时筒夹必须先置入螺帽，再装入刀具，接着锁固本体
- A collet and replacement of cutting tools, screw nut and body must be clean, and add grease, Otherwise it will cause damage to the thread
- The device must be placed when the collet nut, and then into the tool, then the lock body

in

订货编号		L	L1	L2	D	d (夹持范围)
CAT40	ER16–2.76”	5.447”	2.76”	2.01”	1.102”	1/32 ~ 3/8
	ER16–4.0”	6.687”	4.0”	3.25”	1.102”	1/32 ~ 3/8
	ER20–2.76”	5.447”	2.76”	2.01”	1.338”	1/16 ~ 1/2
	ER20–4.0”	6.687”	4.0”	3.25”	1.338”	1/16 ~ 1/2
	ER25–2.76”	5.447”	2.76”	2.01”	1.653”	1/16 ~ 5/8
	ER25–4.0”	6.687”	4.0”	3.25”	1.653”	1/16 ~ 5/8
	ER32–2.76”	5.447”	2.76”	2.01”	1.968”	3/32 ~ 25/32
	ER32–4.0”	6.687”	4.0”	3.25”	1.968”	3/32 ~ 25/32
	ER40–4.0”	6.687”	4.0”	3.25”	2.48”	3/32 ~ 1
CAT50	ER16–4.0”	8.0”	4.0”	3.25”	1.102”	1/32 ~ 3/8
	ER20–4.0”	8.0”	4.0”	3.25”	1.338”	1/16 ~ 1/2
	ER25–4.0”	8.0”	4.0”	3.25”	1.653”	1/16 ~ 5/8
	ER32–4.0”	8.0”	4.0”	3.25”	1.968”	3/32 ~ 25/32
	ER40–4.0”	8.0”	4.0”	3.25”	2.48”	3/32 ~ 1

LJ0501-0004
FMA 面铣刀柄
FACE MILL ARBOR

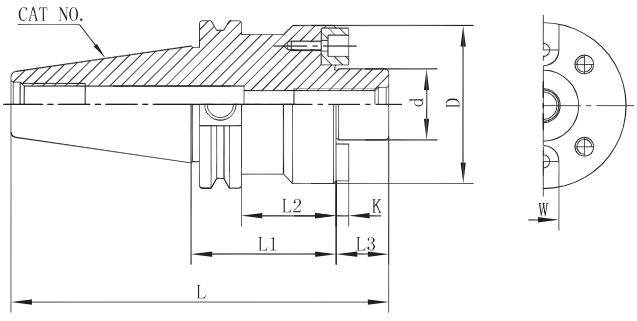

● 平面铣刀配合部位（d）轴系公差h6
● The face milling cutter with parts (d) shaft tolerance h6

in

订货编号		L	L1	L2	L3	d	D	K	W
CAT40	FMA1″ –1.75″	4.437″	1.75″	3.867″	0.787″	1″	2.362″	0.178″	0.374″
	FMA1–1/4″ –2.0″	4.687″	2.0″	4.117″	0.866″	1.25″	2.756″	0.264″	0.5″
	FMA1–1/2″ –2.0″	4.687″	2.0″	4.117″	1″	1.5″	3.346″	0.349″	0.626″
CAT50	FMA1″ –1.75″	5.75″	1.75″	5″	0.787″	1″	2.362″	0.178″	0.374″
	FMA1″ –4.0″	8″	4.0″	7.25″	0.787″	1″	2.362″	0.178″	0.374″
	FMA1″ –6.0″	10″	6.0″	9.25″	0.787″	1″	2.362″	0.178″	0.374″
	FMA1–1/4″ –1.75″	5.75″	1.75″	5″	0.866″	1.25″	2.756″	0.264″	0.5″
	FMA1–1/4″ –4.0″	8″	4.0″	7.25″	0.866″	1.25″	2.756″	0.264″	0.5″
	FMA1–1/4″ –6.0″	10″	6.0″	9.25″	0.866″	1.25″	2.756″	0.264″	0.5″
	FMA1–1/2″ –2.0″	6″	2.0″	5.25″	1″	1.5″	3.346	0.349″	0.626″
	FMA1–1/2″ –4.0″	8″	4.0″	7.25″	1″	1.5″	3.346	0.349″	0.626″
	FMA2″ –3.0″	7″	3.0″	6.25″	1″	2″	3.74″	0.384″	0.75″
	FMA1–7/8″ –3.0″	7″	3.0″	6.25″	1″	1.875″	5.26″	0.49″	1″

LJ0501-0006
SLN 侧固式刀柄
SIDE LOCK HOLDER

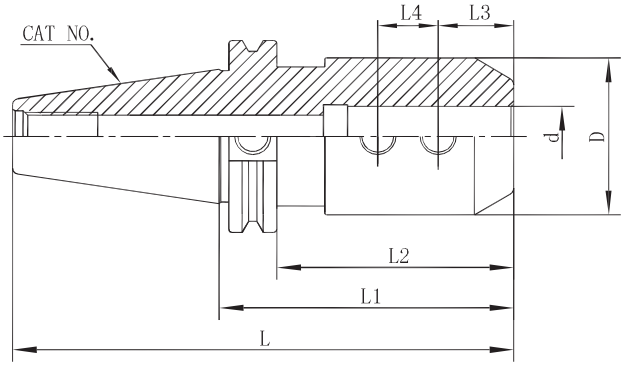

- 夹持孔径公差H5
- 3/4″ 以内一只锁紧螺钉，7/8″ 以上两只锁紧螺钉
- The clamping hole tolerance H5
- 3/4 Inch within a lock screw, 7/8 inch above the two locking screw

in

订货编号		L	L1	L2	L3	L4	D	d
CAT40	SLN1/4″ –3.0″	5.687″	3.0″	2.25″	0.63″	—	0.78″	1/4″
	SLN5/16″ –3.0″	5.687″	3.0″	2.25″	0.63″	—	0.88″	5/16″
	SLN3/8″ –3.0″	5.687″	3.0″	2.25″	0.781″	—	1″	3/8″
	SLN1/2″ –3.0″	5.687″	3.0″	2.25″	0.875″	—	1.25″	1/2″
	SLN5/8″ –3.0″	5.687″	3.0″	2.25″	0.937″	—	1.5″	5/8″
	SLN3/4″ –3.5″	6.187″	3.5″	2.75″	1″	—	1.75″	3/4″
	SLN7/8″ –3.5″	6.187″	3.5″	2.75″	1.063″	0.875″	1.88″	7/8″
	SLN1″ –4.0″	6.687″	4.0″	3.25″	1.125″	1″	2″	1″
	SLN1–1/4″ –4.6″	7.287″	4.6″	3.85″	1.125″	1″	2.5″	1–1/4″
CAT50	SLN1/4″ –4.0″	8.0″	4.0″	3.25″	0.63″	—	0.78″	1/4″
	SLN5/16″ –4.0″	8.0″	4.0″	3.25″	0.63″	—	0.88″	5/16″
	SLN3/8″ –4.0″	8.0″	4.0″	3.25″	0.781”	—	1″	3/8″
	SLN1/2″ –4.0″	8.0″	4.0″	3.25″	0.875″	—	1.25″	1/2″
	SLN5/8″ –4.0″	8.0″	4.0″	3.25″	0.937″	—	1.5″	5/8″
	SLN3/4″ –4.0″	8.0″	4.0″	3.25″	1″	—	1.75″	3/4″
	SLN7/8″ –4.0″	8.0″	4.0″	3.25″	1.063″	0.875″	1.88″	7/8″
	SLN1″ –4.0″	8.0″	4.0″	3.25″	1.125″	1″	2″	1″
	SLN1–1/4″ –4.6″	8.6″	4.6″	3.85″	1.125″	1″	2.5″	1–1/4″
	SLN1–1/2″ –4.6″	8.6″	4.6″	3.85″	1.125″	1″	3.0″	1–1/2″
	SLN2″ –6.0″	10″	6.0″	5.25″	1.335″	1.41″	3.75″	2″

LJ0501-0008
MTA 莫氏锥度刀柄
MORSE TAPER HOLDER

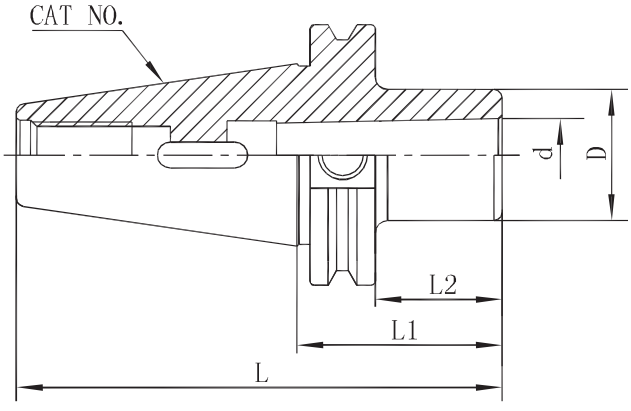

- 用于带莫氏锥度的钻头等刀具、装卸刀具时间短、容易操作
- For Morse taper drill tool, tool handling time is short, easy to operate

in

订货编号		L	L1	L2	D	d
CAT40	MTA1–1.6″	4.287″	1.6″	0.85″	1″	0.475″
	MTA2–2.0″	4.687″	2.0″	1.25″	1.25″	0.7″
	MTA3–2.75″	5.437″	2.75″	2″	1.55″	0.938″
	MTA4–3.75″	6.437″	3.75″	3″	1.75″	1.23″
CAT50	MTA1–2.0″	6.0″	2.0″	1.25″	1″	0.475″
	MTA2–2.0″	6.0″	2.0″	1.25″	1.25″	0.7″
	MTA3–2.75″	6.75″	2.75″	2″	1.55″	0.938″
	MTA4–3.75″	7.75″	3.75″	3″	1.75″	1.23″
	MTA5–4.1″	8.1″	4.1″	3.35″	2.48″	1.748″

LJ0601-0002
SDC 延长杆
EXTENSION BAR

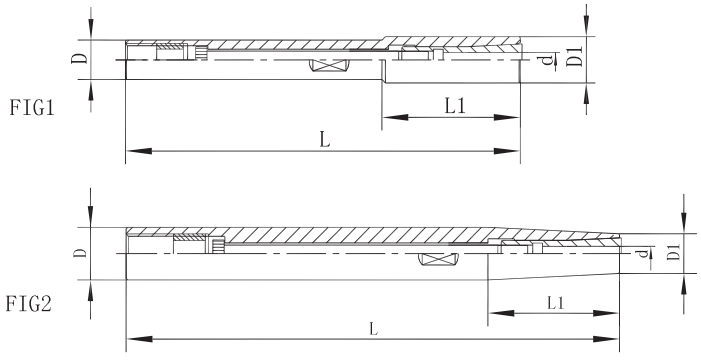

mm

订货编号		L	L1	D	D1	d (夹持范围)	FIG
ST12	SDC6-120	120	42	12	14	3～6	1
	SDC6-150	150	42	12	14	3～6	1
ST16	SDC6-100	100	30	16	14	3～6	2
	SDC6-150	150	40	16	14	3～6	2
ST20	SDC6-150	150	40	20	14	3～6	2
	SDC6-200	200	70	20	14	3～6	2
	SDC8-100	100	20	20	19	3～8	2
	SDC8-150	150	30	20	19	3～8	2
	SDC8-200	200	47	20	19	3～8	2
ST25	SDC6-250	250	115	25	14	3～6	2
	SDC8-200	200	70	25	19	3～8	2
	SDC8-250	250	115	25	19	3～8	2
ST32	SDC6-250	250	115	32	14	3～6	2
	SDC12-300	300	70	32	28	4～12	2

LJ0602-0002
ER 延长杆
EXTENSION BAR

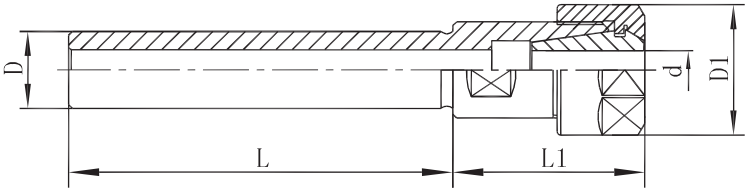

mm

订货编号		L	L1	D	D1	d (夹持范围)
C10	ER8–100	100	24	10	14	1～5
C12	ER8–150	150	24	12	14	1～5
C16	ER11–100	100	26.5	16	19	1～7
C16	ER16–100	100	35	16	28	1～10
	ER16–150	150	35	16	28	1～10
	ER16–200	200	35	16	28	1～10
	ER20–100	100	40	16	34	1～13
	ER20–150	150	40	16	34	1～13
C20	ER16–100	100	35	20	28	1～10
	ER16–150	150	35	20	28	1～10
	ER16–200	200	35	20	28	1～10
	ER20–100	100	40	20	34	1～13
	ER20–150	150	40	20	34	1～13
	ER20–200	200	40	20	34	1～13
C25	ER16–150	150	35	25	28	1～10
	ER20–150	150	40	25	34	1～13
	ER25–150	150	45	25	42	3～16
C32	ER32–100	100	51	32	50	3～20

LJ0602-0004
ER 延长杆
EXTENSION BAR

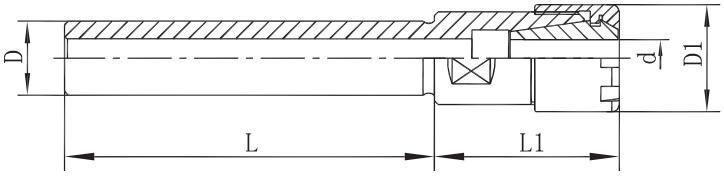

mm

订货编号		L	L1	D	D1	d (夹持范围)
C10	ER8M-100	100	24	10	12	1～5
C12	ER8M-150	150	24	12	12	1～5
C16	ER11M-100	100	26.5	16	16	1～7
C16	ER16M-100	100	35	16	22	1～10
	ER16M-150	150	35	16	22	1～10
	ER16M-200	200	35	16	22	1～10
	ER20M-100	100	40	16	28	1～13
	ER20M-150	150	40	16	28	1～13
C20	ER16M-100	100	35	20	22	1～10
	ER16M-150	150	35	20	22	1～10
	ER16M-200	200	35	20	22	1～10
	ER20M-100	100	40	20	28	1～13
	ER20M-150	150	40	20	28	1～13
	ER20M-200	200	40	20	28	1～13
C25	ER16M-150	150	35	25	22	1～10
	ER20M-150	150	40	25	28	1～13

三点模具组合
MODULAR CONCENTRICITY TEST GAUGE

FIG.1

FIG.2

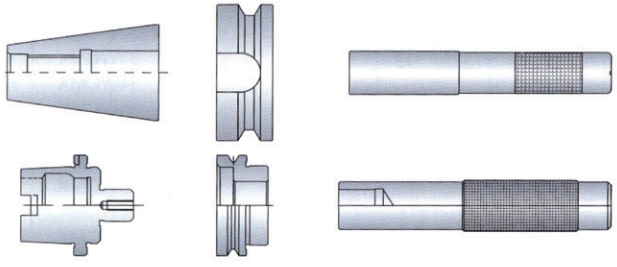

订货编号	锥度标准	FIG
BT30	MAS403-BT	1
BT40	MAS403-BT	1
BT50	MAS403-BT	1
HSK63A	DIN69893	2
HSK100A	DIN69893	2

主轴静态测量棒
TEST BAR

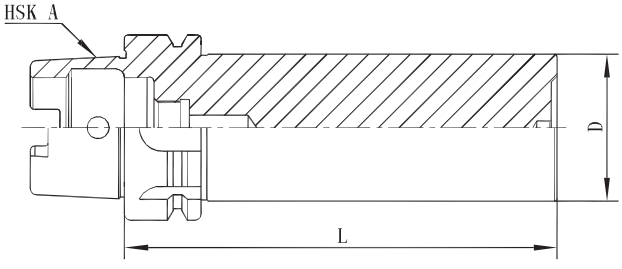

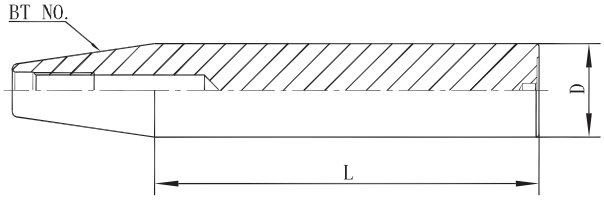

mm

订货编号	L	D	圆柱度	同心度
BT30-D32-250	250	32	<0.003	<0.005
BT40-D40-250	250	40	<0.003	<0.005
BT40-D40-300	300	40	<0.003	<0.005
BT50-D40-300	300	40	<0.003	<0.005
BT50-D40-350	350	40	<0.003	<0.005
HSK63A-D50-200	200	50	<0.003	<0.005
HSK63A-D50-300	300	50	<0.003	<0.005
HSK100A-D50-200	200	50	<0.003	<0.005
HSK100A-D50-300	300	50	<0.003	<0.005

SDC 筒夹
COLLET

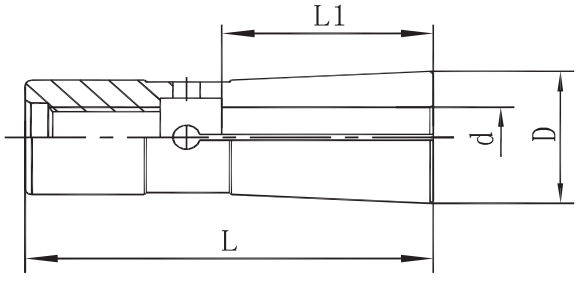

mm

订货编号		夹持范围d	L	L1	D
SDC6	3E	3	36	14	9.6
	3.175E	3.175	36	14	9.6
	4E	4	36	14	9.6
	5E	5	36	16	9.6
	6E	6	36	16	9.6
SDC8	3E	3	45	15	15
	4E	4	45	16	15
	6E	6	45	24	15
	8E	8	45	26	15
SDC12	4E	4	60	15	22
	6E	6	60	25	22
	8E	8	60	30	22
	10E	10	60	33	22
	12E	12	60	33	22

CSK 高转速筒夹
CSK HIGH SPEED DOLLET

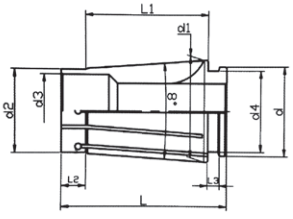

型号 Model No.	d	d1	d2	d3	d4	L	L1	L2	L3
CSK06	8.9(8.6)	10.5	7.5	6	7.8	25	17.5	3.5	2.5
CSK10	13.7(13.1)	15.6	12	10	12	30.5	22	5	2.3
CSK13	18.5	20.1	17	13	15	39	28	5	2.5
CSK16	21.3(20.6)	24.6	18.8	16	19	45	32	8	2.8
CSK20	26.5	30	24	20	23	50	42	8	2.8
CSK25	31.1(29.9)	35.6	28.8	25.4	28.2	57	43	8.5	2.9

- 选用优质弹簧钢 :65Mn
- 硬度：HRC44–48

- Made of special esastic steel: 65Mn
- Hardness:HRC44–48

CSK06		CSK10		CSK13		CSK16		CSK20		CSK25	
型号 Model No.	范围 RANGE	型号 Model No.	范围 RANGE	型号 Model No.	范围 RANGE	型号 Model No.	范围 RANGE	型号 Model No.	范围 RANGE	型号 Model No.	范围 RANGE
CSK06–2	2–1.75	CSK10–2	2–1.75	CSK13–3	3–2.75	CSK16–3	3–2.75	CSK20–4	4–3.5	CSK25–6	6–6.65
CSK06–2.5	2.5–2.25	CSK10–2.5	2.5–2.25	CSK13–3.5	3.5–3	CSK16–3.175	3.175–2.7	CSK20–4.5	4.5–4	CSK25–8	8–6.75
CSK06–3	3–2.75	CSK10–3	3–2.75	CSK13–4	4–3.5	CSK16–3.5	3.5–3	CSK20–5	5–5.5	CSK25–10	10–9.5
CSK06–3.5	3.5–3	CSK10–3.175	3.175–2.7	CSK13–4.5	4.5–4	CSK16–4	4–3.5	CSK20–5.5	5.5–5	CSK25–12	12–11.5
CSK06–4	4–3.5	CSK10–3.5	3.5–3	CSK13–5	5–4.5	CSK16–4.5	4.5–4	CSK20–6	6–5.5	CSK25–14	14–13.5
CSK06–4.5	4.5–4	CSK10–4	4–3.5	CSK13–5.5	5.5–5	CSK16–5	5–4.5	CSK20–6.5	6.5–6	CSK25–16	16–15.5
CSK06–5	5–4.5	CSK10–4.5	4.5–4	CSK13–6	6–5.5	CSK16–5.5	5.5–5	CSK20–7	7–6.5	CSK25–16.5	16.5–16
CSK06–5.5	5.5–6	CSK10–5	5–4.5	CSK13–6.5	6.5–6	CSK16–6	6–5.5	CSK20–7.5	7.5–7	CSK25–17	17–16.5
CSK06–6	6–5.5	CSK10–5.5	5.5–5	CSK13–7	7–6.5	CSK16–6.5	6.5–6	CSK20–8	8–7.5	CSK25–17.5	17.5–17
		CSK10–6	6–5.5	CSK13–7.5	7.5–7	CSK16–7	7–6.5	CSK20–8.5	8.5–8	CSK25–18	18–17.5
		CSK10–6.5	6.5–6	CSK13–8	8–7.5	CSK16–7.5	7.5–7	CSK20–9	9–8.5	CSK25–18.5	18.5–18
		CSK10–7	7–6.5	CSK13–8.5	8.5–8	CSK16–8	8–7.5	CSK20–9.5	9.5–9	CSK25–19	19–18.5
		CSK10–7.5	7.5–7	CSK13–9	9–8.5	CSK16–8.5	8.5–8	CSK20–10	10–9.5	CSK25–19.5	19.5–19
		CSK10–8	8–7.5	CSK13–9.5	9.5–9	CSK16–9	9–8.5	CSK20–10.5	10.5–10	CSK25–20	20–19.5
		CSK10–8.5	8.5–8	CSK13–10	10–9.5	CSK16–9.5	9.5–9	CSK20–11	11–10.5	CSK25–20.5	20.5–20
		CSK10–9	9–8.5	CSK13–10.5	10.5–10	CSK16–10	10–9.5	CSK20–11.5	11.5–11	CSK25–21	21–20.5
		CSK10–9.5	9.5–9	CSK13–11	11–10.5	CSK16–10.5	10.5–10	CSK20–12	12–11.5	CSK25–21.5	21.5–21
		CSK10–10	10–9.5	CSK13–11.5	11.5–11	CSK16–11	11–10.5	CSK20–12.5	12.5–12	CSK25–22	22–21.5
				CSK13–12	12–11.5	CSK16–11.5	11.5–11	CSK20–13	13–12.5	CSK25–22.5	22.5–22
				CSK13–12.5	12.5–12	CSK16–12	12–11.5	CSK20–13.5	13.5–13	CSK25–23	23–22.5
				CSK13–13	13–12.5	CSK16–12.5	12.5–12	CSK20–14	14–13.5	CSK25–23.5	23.5–23
						CSK16–13	13–12.5	CSK20–14.5	14.5–14	CSK25–24	24–23.5
						CSK16–13.5	13.5–13	CSK20–15	15–14.5	CSK25–24.5	24.5–24
						CSK16–14	14–13.5	CSK20–15.5	15.5–15	CSK25–25	25–24.5
						CSK16–14.5	14.5–14	CSK20–16	16–15.5		
						CSK16–15	15–14.5	CSK20–16.5	16.5–16		
						CSK16–15.5	15.5–15	CSK20–17	17–16.5		
						CSK16–16	16–15.5	CSK20–17.5	17.5–17		
								CSK20–18	18–17.5		
								CSK20–18.5	18.5–18		
								CSK20–19	19–18.5		
								CSK20–19.5	19.5–19		
								CSK20–20	20–19.5		

精度检测：Inspection of Accuracy

L	径向跳动 (Run out)	
	Ⅰ级（Ⅰ class)	Ⅱ级（Ⅱ class)
4×D	≤ 0.008	≤ 0.005

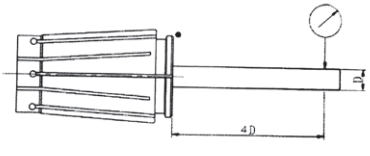

ER 系列夹头
ER SERIES CHUCK

- 选用优质弹簧钢
- 夹紧力大，夹持范围广，精度高
- 广泛用于镗、铣、钻、攻丝、磨、雕刻等加工

- Made of special elastic steel material
- Power clamping ability,precise accuracy
- Used for boring,milling,drilling,tappping,grinding and engraving operation etc.

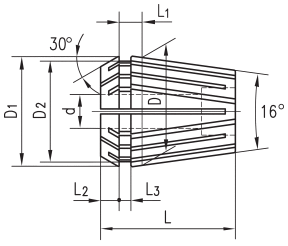

ER11–ER50

ER8

型 号 Model No.	d H7	D	D1	D2	L	L1	L2	L3	弹性收缩量 Collapsible capacity
ER8	⩾1.0～5.0	8	8.45	6.5	13.5	2.98	1.5	1.2	0.5
ER11	⩾1.0～7.0	11	11.5	9.5	18.0	3.8	2.5	2.0	0.5
ER16	⩾1.0～2.5	16	17	13.8	27.5	6.26	4.0	2.7	0.5
	>2.5～10.0	16	17	13.8	27.5	6.26	4.0	2.7	1.0
ER20	⩾1.0～2.5	20	21	17.4	31.5	6.36	4.8	2.8	0.5
	>2.5～13.0	20	21	17.4	31.5	6.36	4.8	2.8	1.0
ER25	⩾1.0～2.5	25	26	22.0	34.0	6.66	5.0	3.1	0.5
	>2.5～16.0	25	26	22.0	34.0	6.66	5.0	3.1	1.0
ER32	⩾2.0～2.5	32	33	29.2	40.0	7.16	5.5	3.6	0.5
	>2.5～20.0	32	33	29.2	40.0	7.16	5.5	3.6	1.0
ER40	⩾3.0～26.0	40	41	36.2	46.0	7.66	7.0	4.1	1.0
ER50	⩾6.0～10.0	50	52	46.0	60.0	12.6	8.5	5.5	1.0
	>10.0～34.0	50	52	46.0	60.0	12.6	8.5	5.5	2.0

精度检测 Inspection of Accuracy

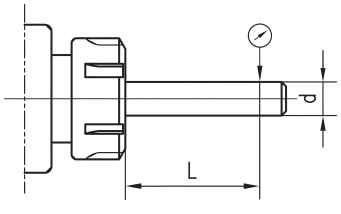

D	L	径向跳动 Run out tolerance	
		I	II
1.0～1.6	6	0.008	0.015
>1.6～3.0	10		
>3.0～6.0	16		
>6.0～10.0	25		
>10.0～18.0	40	0.008	0.015
>18.0～26.0	50		
>26.0～30.0	60		
>30.0～34.0	80	0.008	0.015

说明：无特殊要求，一般按 II 级供货，如需 I 级，则需特殊订货，价格另议

If no special requirement, we would supply to you according to II grade; if you require I grade,the price would be advanced

拉钉系列
RETENTION KNOB

MAS403-1982

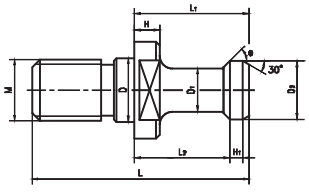

订货编号	L	L1	L2	D	D1	D2	H	H1	M	θ		
BT30(θ)	43	23	18	12.5	7	11	5	2.5	M12	45°	60°	90°
BT40(θ)	60	35	28	17	10	15	6	3	M16	45°	60°	90°
BT50(θ)	85	45	35	25	17	23	10	5	M24	45°	60°	90°

MAZAK

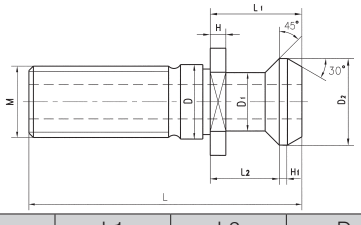

订货编号	L	L1	L2	D	D1	D2	H	H1	M
MAZAK-BT40	44.10	19.10	14.02	17	12.45	18.8	3.05	1.52	M16
MAZAK-CT40	41.25	16.25	11.17	17	12.45	18.8	3.05	1.52	M16
MAZAK-BT50	65.20	25.20	17.7	25	20.83	28.96	5.05	2.54	M24

DIN69872-1988

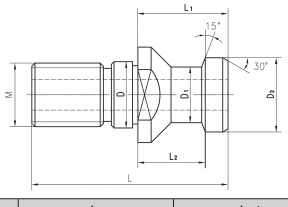

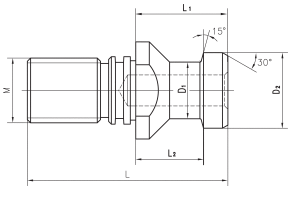

订货编号	L	L1	L2	D	D1	D2	M
DT30	44	24	19	13	9	13	M12
DT40	54	26	20	17	14	19	M16
DT50	74	34	25	25	21	28	M24

ANSI/ASME B5.50-1985

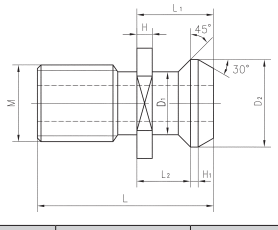

订货编号	L	L1	L2	D1	D2	H	H1	M
CT30	27.94	11.68	8.13	9.78	13.21	2.54	1.01	1/2″ -13
CT40	38.10	16.26	11.18	12.45	18.80	3.05	1.52	5/8″ -11
CT50	58.42	25.4	17.78	20.83	28.96	5.08	2.54	1″ -8

拉钉系列
RETENTION KNOB

JIS B6339-1986

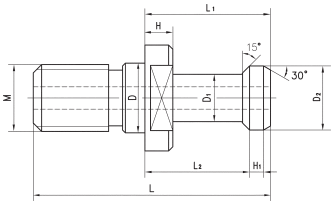

订货编号	L	L1	L2	D	D1	D2	H	H1	M
JIS-30	43	23.4	18.4	12.5	8	12	5	3	M12
JIS-40	54	29	23	14	19	15	7	3	M16
JIS-50	74	34	25	25	21	28	7	5	M24

ISO/DIS7388/2-1984A

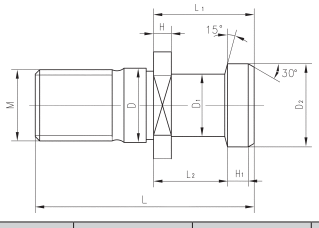

订货编号	L	L1	L2	D	D1	D2	H	H1	M
ISO-30A	44	24	19	13	8	12	4	3	M12
ISO-40A	54	26	20	17	14	19	4	4	M16
ISO-50A	74	34	25	25	21	28	6	7	M24

ISO/DIS7388/2-1984B

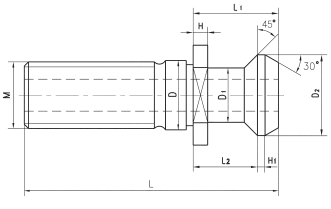

订货编号	L	L1	L2	D	D1	D2	H	H1	M
ISO-30B	27	11.8	8.1	13	9.3	13.3	2.7	1.2	M12
ISO-40B	44.5	16.4	11.15	17	12.95	18.95	3.25	1.75	M16
ISO-50B	65.5	25.5	17.95	25	19.6	29.1	5.25	2.75	M24

ISO雕铣机用拉钉

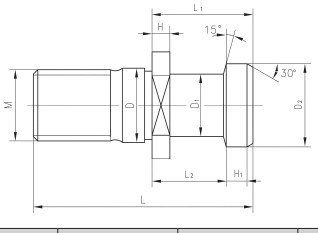

订货编号	L	L1	L2	D	D1	D2	H	H1	M
ISO20	26	12	9	8.5	6	9	3	1.4	M8
ISO25	32	16	11.6	9	7	10	3.5	2	M8
ISO30	45	24	19	13	9	13	4	2.5	M12

ER-A 螺帽 NUT

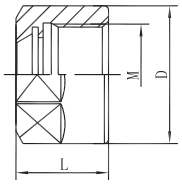

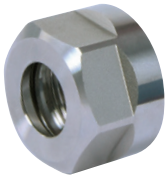

订货编号	L	D	M
ER11A	11.3	19	M14 × 0.75P
ER16A	17.5	28	M22 × 1.5P
ER20A	19	34	M25 × 1.5P

ER-UM 螺帽 NUT

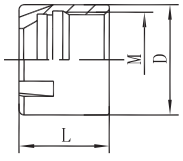

订货编号	L	D	M
ER25UM	20	42	M32 × 1.5P
ER32UM	22.5	50	M40 × 1.5P
ER40UM	25.5	63	M50 × 1.5P

ER-M 螺帽 NUT

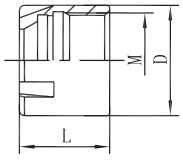

订货编号	L	D	M
ER11M	12	16	M13 × 0.75P
ER16M	18	22	M19 × 1.0P
ER20M	19	28	M24 × 1.0P
ER25M	20	35	M30 × 1.0P

ER-MS 螺帽 NUT

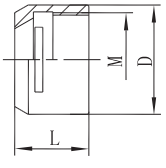

订货编号	L	D	M
ER11MS	11.3	16	M13 × 0.75P
ER16MS	17	22	M19 × 1.0P
ER20MS	19	28	M24 × 1.0P
ER25MS	23	35	M30 × 1.0P

GER 螺帽 NUT

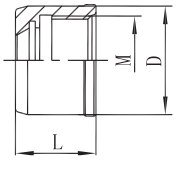

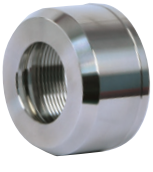

订货编号	L	D	M
GER16	19	27	M22 × 1.5P
GER20	21	30	M24 × 1.0P
GER25	25	35	M30 × 1.0P
GER32	27	48	M40 × 1.5P

GSK 螺帽 NUT

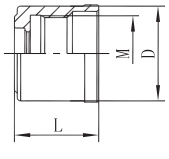

订货编号	L	D	M
GSK06	21	19	M15.5 × 1.0P
GSK10	24	27	M21.5 × 1.0P
GSK13	27	35	M28 × 1.5P
GSK16	31	40	M32 × 1.5P
GSK20	35	48	M40 × 1.5P
GSK25	37	55	M45 × 1.5P

ERM 扳手 SPANNER

订货编号	适合螺帽
HYBS-ER11M	ER11M
HYBS-ER16M	ER16M
HYBS-ER20M	ER20M

ER 开口扳手 SPANNER

订货编号	适合螺帽
HYBS-ER11A	ER11A
HYBS-ER16A	ER16A
HYBS-ER20A	ER20A

ISO 刀柄扳手 SPANNER

订货编号	适合刀柄
HYBS-ISO20	ISO20
HYBS-ISO25	ISO25

ER/UM 扳手 SPANNER

订货编号	适合螺帽
HYBS-ER25	ER25UM
HYBS-ER32	ER32UM
HYBS-ER40	ER40UM

套筒专用扳手 SPANNER

订货编号	适合螺帽
HYBS-GSK10	GSK10
HYBS-GSK13	GSK13
HYBS-GSK16	GSK16
HYBS-GSK20	GSK20
HYBS-GER16	GER16
HYBS-GER20	GER20
HYBS-GER25	GER25
HYBS-GER32	GER32
HYBS-HLC32	HLC32

ERMS 扳手 SPANNER

订货编号	适合螺帽
HYBS-ER16MS	ER16MS
HYBS-ER20MS	ER20MS

锁刀座
TOOL HOLDER DEVICE

立卧两用锁刀座

订货编号	适合刀柄
HYDZ-BT30	MAS403-BT30
HYDZ-BT40	MAS403-BT40
HYDZ-BT50	MAS403-BT50

轴承式锁刀座

订货编号	适合刀柄
HYZCDZ-D46	NBT30/BT30
HYZCDZ-D40	HSK40A/E
HYZCDZ-D50	HSK50A/E
HYZCDZ-D63	HSK63A/E NBT40/BT40

DIN 63893HSK-A

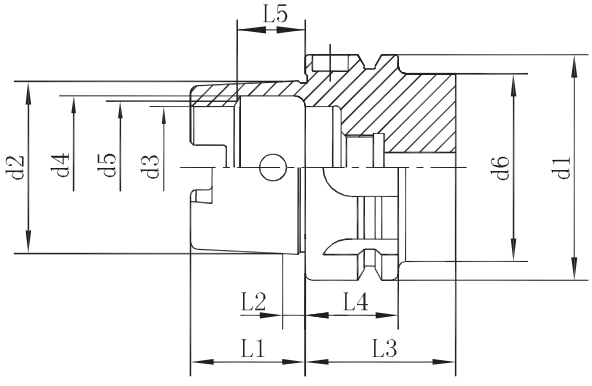

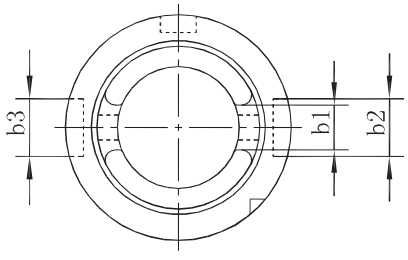

规格	L1 0 −0.2	L2	L3 min	L4	L5 js10	d1 h10	d2	d3 H10	d4 H11	d5	d6 max	b1 ±0.04	b2 H10	b3 H10
HSK32A	16	3.2	35	20	8.92	32	24.007	17	20.5	19	26	7.05	7	9
HSK40A	20	4	35	20	11.42	40	30.007	21	25.5	23	34	8.05	9	11
HSK50A	25	5	42	26	14.12	50	38.009	26	32	29	42	10.54	12	14
HSK63A	32	6.3	42	26	18.13	63	48.01	34	40	37	53	12.54	16	18
HSK80A	40	8	42	26	22.85	80	60.012	42	50	46	68	16.04	18	20
HSK100A	50	10	45	29	28.56	100	75.013	53	63	58	88	20.02	20	22
HSK125A	63	12.5	45	29	36.27	125	95.016	67	80	73	111	25.02	25	28
HSK160A	80	16	47	31	45.98	160	120.016	85	100	92	144	30.02	32	36

DIN 63893HSK-E

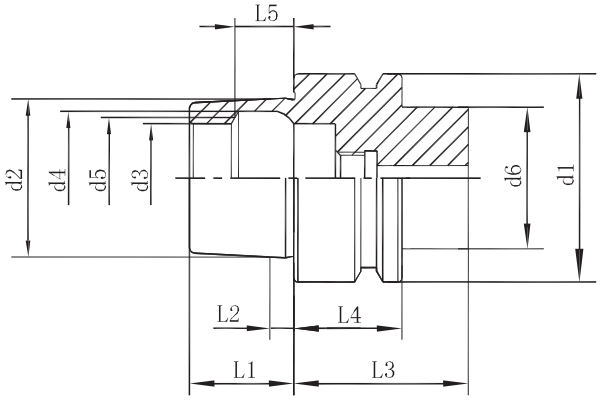

规格	L1 0 −0.2	L2	L3 min	L4	L5 js10	d1 h10	d2	d3 H10	d4 H11	d5	d6 max
HSK32E	16	3.2	35	20	8.92	32	24.007	17	20.5	19	26
HSK40E	20	4	35	20	11.42	40	30.007	21	25.5	23	34
HSK50E	25	5	42	26	14.12	50	38.009	26	32	29	42
HSK63E	32	6.3	42	26	18.13	63	48.01	34	40	37	53

DIN 63893HSK-F

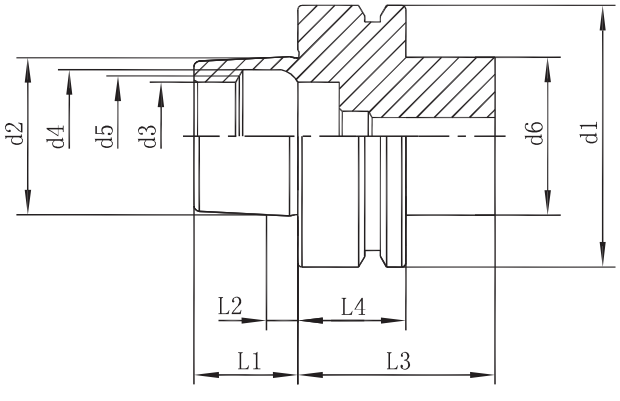

规格	L1 0 −0.2	L2	L3 min	L4	L5 js10	d1 h10	d2	d3 H10	d4 H11	d5	d6 max
HSK50F	20	4	42	26	11.42	50	30.007	21	25.5	23	42
HSK63F	25	5	42	26	14.12	63	38.009	26	32	29	53

HSK 各种形状和特征
VARIOUS FORMS OF HSK AND FEATURES

A 型 A type

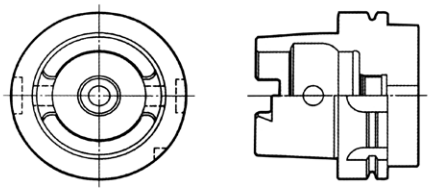

- 用途：加工中心
  For machining centers.
- 通过切削液管可以向轴心供切削液
  Through–the–tool coolant from coolant tube acceptable.
- 依靠锥体上端的驱动槽来传递扭矩
  With drive slots at the top of taper portion.
- ATC用U槽
  With "U"slots for ATC.
- 手动紧固用孔
  With pin holes for manual clamping.
- 加曼切口
  With a German notch.
- ID芯片孔（选购）
  With a hole for ID chip (Option)

B 型 B type

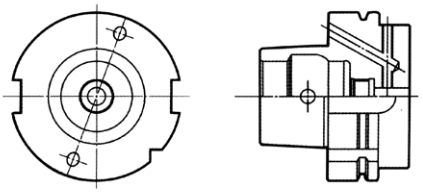

- 用途：加工中心、通用铣床、车床
  For machining centers,milling machines and lathes.
- 通过法兰头或切削液管、可以向轴心供切削液
  Through–the–tool coolant from flange or coolant tube acceptable.
- 依靠法兰头部的凹槽来传递扭矩
  With "U" drive slots at the flange.
- 手动紧固用孔
  With pin holes for manual clamping.
- 加曼切口
  With a German notch.
- ID芯片孔（选购）
  With a hole for ID chip. (Option)
- 和公称刀柄比、锥体部小一个规格
  With one rank smaller taper size

C 型 C type

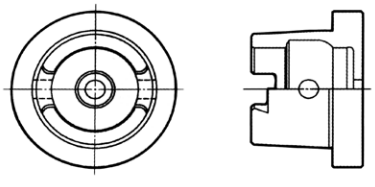

- 用途：如组合机床等无ATC功能机器专用
  For non–ATC machines, such as transfer machines.
- 可以实现轴心供给切削液
  Through–the–tool coolant acceptable.
- 依靠锥体上端的驱动槽来传递扭矩
  With drive slots at the top of taper portion.

D 型 D type

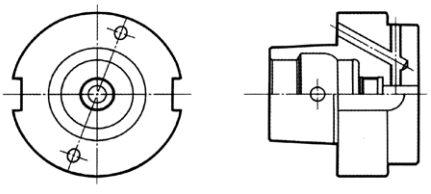

- 用途：如组合机床等无ATC功能机器专用
  For non–ATC machines, such as transter machines.
- 使用法兰头或冷却液管实现轴心供切削液
  Through–the–tool coolant from flange or from coolant tube acceptable.
- 依靠法兰头部的凹槽来传递扭矩
  With "U" drive slots at the flange.
- 和公称刀柄比、锥体部小一个规格
  With one rank smaller taper size

E 型 E type

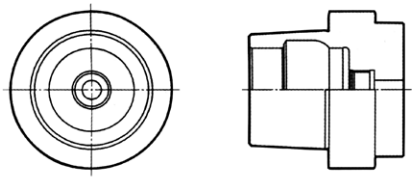

- 用途：高转速加工中心，木工机器
  For high speed machining centers and wood milling machines.
- 对称型，无驱动槽
  With symmetrical shank without drive key slot.
- 依靠摩擦来传递扭矩
  Friction transmission.
- 使用切削液管、可以给轴心供切削液
  Through–the–tool coolant from coolant tube acceptable.

F 型 F type

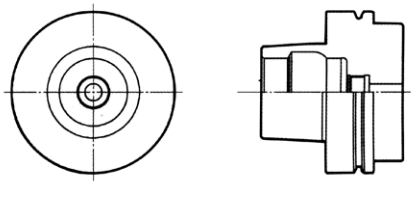

- 使用切削液管、可以给轴心供切削液
  Through–the–tool coolant from coolant tube
- 和公称刀柄比、锥体部小一个规格
  With one rank smaller taper size

数控刀柄标准
MAS 403 BT

A 型:
中心孔不通 Without through hole

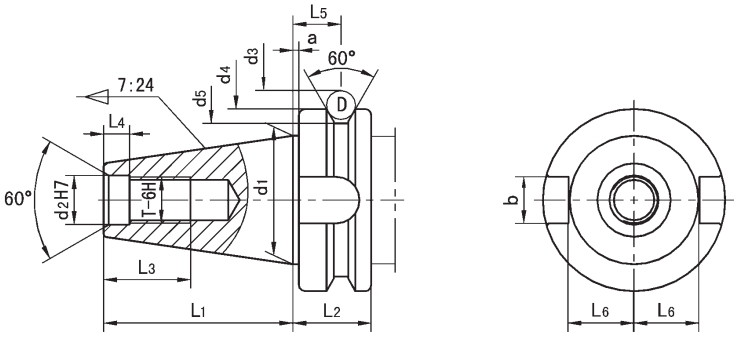

AD 型:
中心进水冷却
Without through hole for center coolant
AD/B 型:

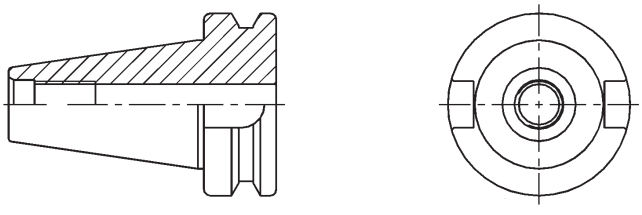

中心进水冷却与法兰盘侧面进水冷却两种形式
Form AD and form B, the former is in the center cold, the latter is in the flange plate cold, may realize central cooling and the side cools two forms the freedoms to transform

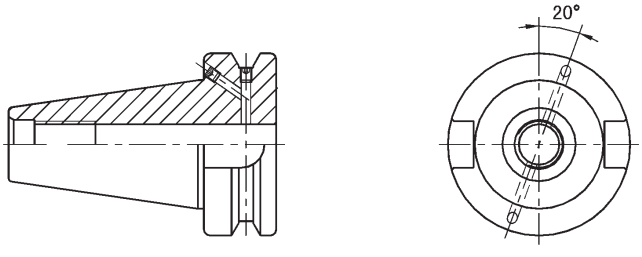

规格	L1	L2	L3	L4	L5	L6	d1	d2	d3	d4	d5	D	a	b	T
BT30	48.4	22	24	7	13.6	16.3	31.75	12.5	56.144	46	38	8	2	16.1	M12
BT40	65.4	27	30	9	16.6	22.6	44.45	17	75.679	63	53	10	2	16.1	M16
BT50	101.8	38	45	13	23.2	35.4	69.85	25	119.019	100	85	15	3	25.7	M24

数控刀柄标准
DIN 69871

DIN69871 A 型:
中心孔不通 Without through hole
DIN69871 AD 型:

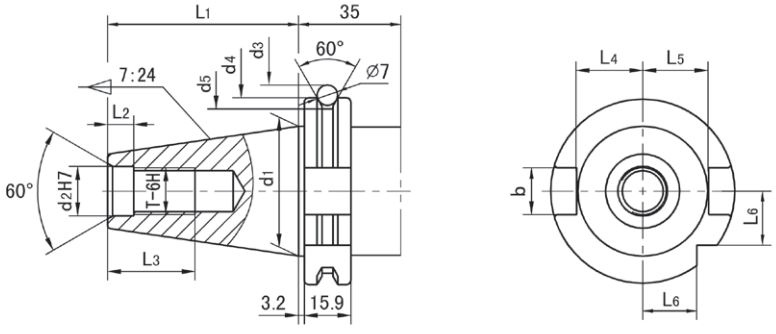

中心进水冷却
Without through hole for center coolant
DIN69871 AD/B 型:
中心进水冷却与法兰盘侧面进水冷却两种形式

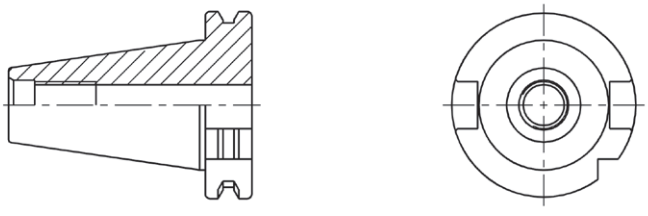

DIN 69871 AD and DIN 69871 B, the former is in the center cold, the latter is in the flange plate cold, may realize central cooling and the side cools two forms the freedoms to transform

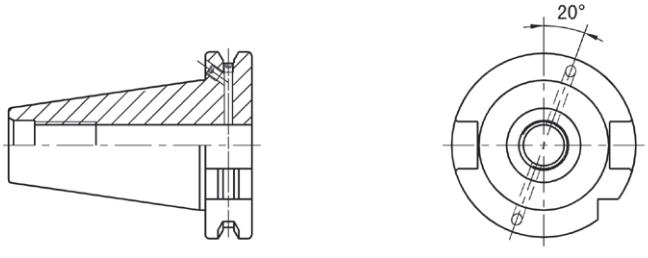

规格	L1	L2	L3	L4	L5	L6	d1	d2	d3	d4	d5	b	T
SK30	47.8	5.5	24	16.4	19	15	31.75	13	59.3	50	44.3	16.1	M12
SK40	68.4	8.2	32	22.8	25	18.5	44.45	17	72.3	63.66	56.25	16.1	M16
SK50	101.75	11.5	47	35.5	37.7	30	69.85	25	107.25	97.5	91.25	25.7	M24

数控刀柄标准
ANSI B5.50 CAT

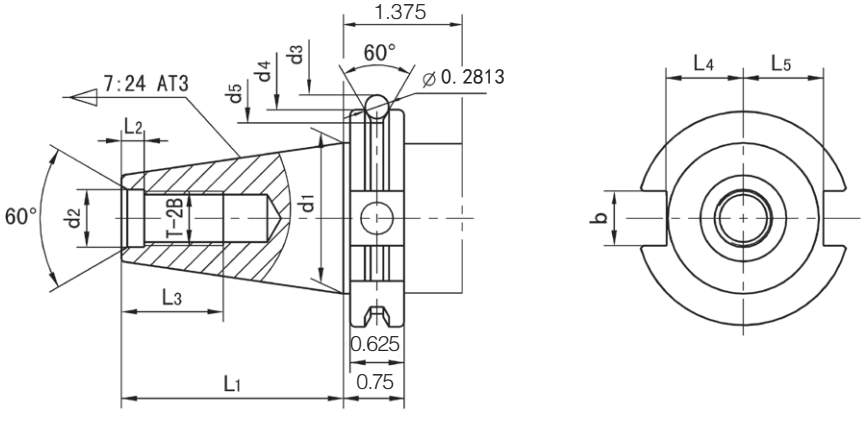

in

规格	L1	L2	L3	L4	L5	d1	d2	d3	d4	d5	b	T
CAT30	1.875	0.188	1.00	0.64	0.735	1.25	0.516	2.176	1.812	1.531	0.645	1/2″ –13
CAT40	2.687	0.188	1.12	0.89	0.985	1.75	0.641	2.863	2.500	2.219	0.645	5/8″ –11
CAT50	4.000	0.250	1.75	1.39	1.485	2.75	1.031	4.238	3.875	3.594	1.020	1″ –8

ISO 标准

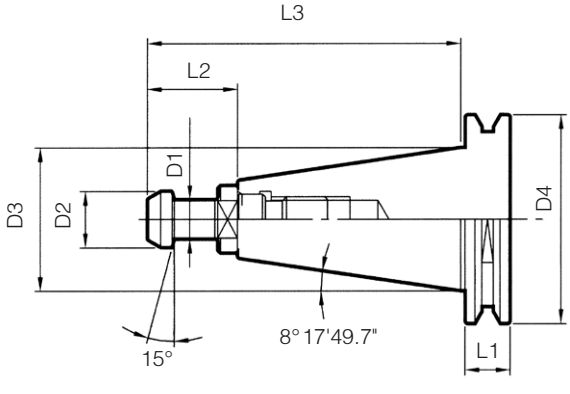

规格	D1	D2	D3	D4	L1	L2	L3
ISO20	6	9	22.225	33	8	12	45.3
ISO25	7	10	25.4	37	8	16	55.7
ISO30	9	13	31.75	50	15.9	24	71.8

削平柄刀具接口形式
DIN1835-B

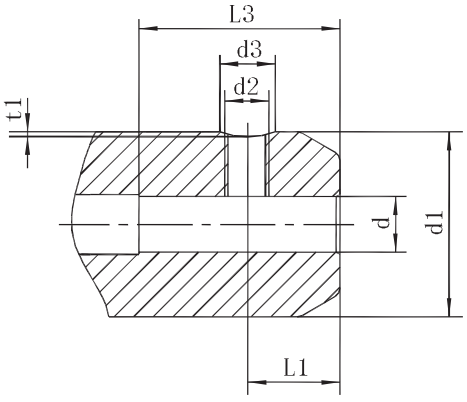

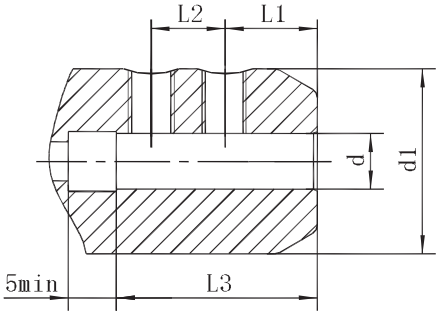

d H5	d1	d2 6H	d3 min	L1 −0.1	L2 ±0.5	L3 ±1	t1	压紧整体硬质合金刀具推荐力矩
6	25	M6	8	18.0	—	35	1.0	5Nm
8	28	M8	10	18.0	—	35	1.3	10Nm
10	35	M10	12	20.0	—	39	1.5	16Nm
12	42	M12	14	22.5	—	44	1.6	28Nm
14	44	M12	14	22.5	—	44	1.6	28Nm
16	48	M14	16	24	—	47	1.7	42Nm
18	50	M14	16	24	—	47	1.7	42Nm
20	52	M16	18	25	—	49	2.1	50Nm
25	65	M18×2.0P	20	24	25	54	2.1	60Nm
32	72	M20×2.0P	22	24	28	58	2.1	60Nm

硬度换算表

APPROXIMATE CONVERTION TO ROCKWELLC HARDNESS

洛氏硬度（c级）Rockwell hardness C scale HRC	维氏硬度 Vickers hardness HV	布氏硬度 10mm球负载29,4KN Brinell hardness 10mm ball load 29.4KN HB	洛氏硬度 Rockwell hardness A级 A scale HRA	洛氏硬度 Rockwell hardness B级 B scale HRB	肖氏硬度 Shore hardness HS	拉伸硬度（近似值）Tension load (Approximate value) MPa
68	940	—	85.6	—	97	—
67	900	—	85.0	—	95	—
66	865	—	84.5	—	92	—
65	832	—	83.9	—	91	—
64	800	—	83.4	—	88	—
63	772	—	82.8	—	87	—
62	746	—	82.3	—	85	—
61	720	—	81.8	—	83	—
60	697	—	81.2	—	81	—
59	674	—	80.7	—	80	—
58	653	[615]	80.1	—	78	—
57	633	[595]	79.6	—	76	—
56	613	[577]	79.0	—	75	—
55	595	[560]	78.5	—	74	2075
54	577	[543]	78.0	—	72	2015
53	560	[525]	77.4	—	71	1950
52	544	[512]	76.8	—	69	1880
51	528	[496]	76.3	—	68	1820
50	513	[481]	75.9	—	67	1760
49	498	[469]	75.2	—	66	1695
48	484	[451]	74.7	—	64	1635
47	471	442	74.1	—	63	1580
46	458	432	73.6	—	62	1530
45	446	421	73.1	—	60	1480
44	434	409	72.5	—	58	1435
43	423	400	72.0	—	57	1385
42	412	390	71.5	—	56	1340
41	402	381	70.9	—	55	1295
40	392	371	70.4	—	54	1250
39	382	362	69.9	—	52	1215
38	372	353	69.4	—	51	1180
37	363	344	68.9	—	50	1160
36	354	336	68.4	(109.0)	49	1115
35	345	327	67.9	(108.5)	48	1080
34	336	319	67.4	(108.0)	47	1055
33	327	311	66.8	(107.5)	46	1025
32	318	301	66.3	(107.0)	44	1000
31	310	294	65.8	(106.0)	43	980
30	302	286	65.3	(105.5)	42	950
29	294	279	64.7	(104.5)	41	930
28	286	271	64.3	(104.0)	41	910
27	279	264	63.8	(103.0)	40	880
26	272	258	63.3	(102.5)	38	860
25	266	253	62.8	(101.5)	38	840
24	260	247	62.4	(101.0)	37	825
23	254	243	62.0	(100.0)	36	805
22	248	237	51.5	99.0	35	785
21	243	231	61.0	98.5	35	770
20	238	226	60.5	97.8	34	760
(18)	230	219	—	69.7	33	730
(16)	222	212	—	95.5	32	705
(14)	213	203	—	93.9	31	675
(12)	204	194	—	92.3	29	650
(10)	196	187	—	90.7	28	620
(8)	188	179	—	89.5	27	600
(6)	180	171	—	87.1	26	580
(4)	173	165	—	85.5	25	550
(2)	166	158	—	83.5	24	530
(0)	160	152	—	81.7	24	515

注：表中（ ）内的数据为非常用范围的数据，仅作为参考。
布氏硬度[ ]内的数据为钨质球没得的数据，其他为标准球测得的数据。
NOTE: Figures shown in ( ) are uncommon and only for reference.
Figures shown [ ] in Brinell harcness category are based on tungsten carblde balls, and cthers are based on standard type balls.

动平衡标准 ISO 1940

Balance Grade		G0.4	G1	G2.5	G6.3	G16	G40	G100	G250	G630	G1600	G4000
Precision Required	exw(mm/s)	0.4	1	2.5	6.3	16	40	100	250	630	1600	4000
	exw(μ m*rpm)	3820	9549	23875	60165	152800	382000	954900	2387500	6016500	15280000	38200000

SETTING OF THE BALANCE SERIES IS
ACCORDING TO ISO 1940 STANDARD

THE FORMULA AS FOLLOWS:

$U = M \times e$

$U = \frac{G \times M}{n} \times 9549$

$G = \frac{n \times U}{9549 \times M}$

G=UNBALANCE SERIES
U=UNBALANCE (g–mm)
e=ECCENTRIC DISTANCE (mm)
M=ROTER WEIGHT (kg)
n=rpm
9549=CONSTANT

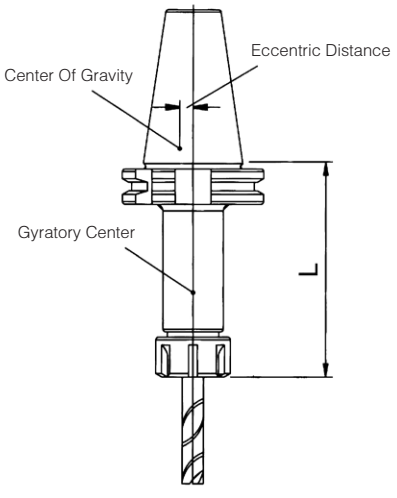

Quality levels according to ISO 1940 and permitted residual imbalance or speed

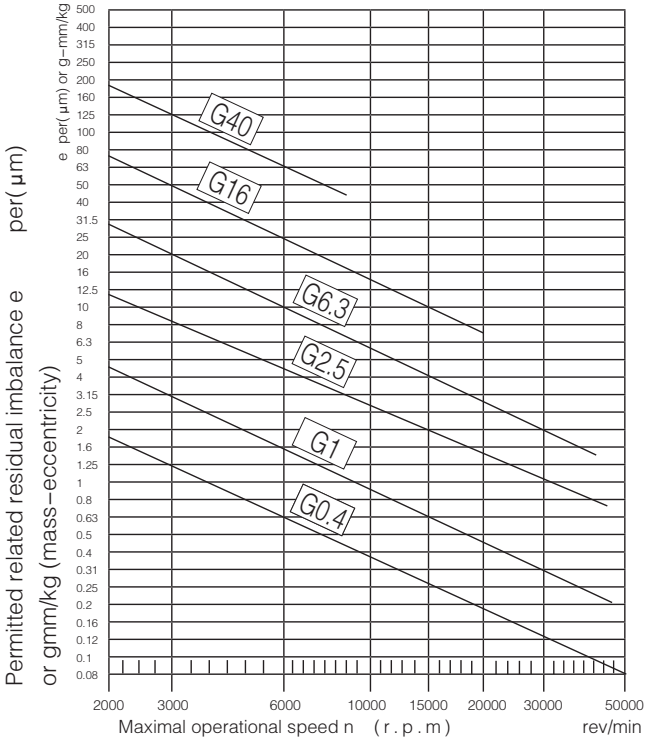


RUSSIA
Krasnoyarsk
Irkutsk
Sea of Okhotsk
Ulaanbaatar
MONGOLIA
Qiqihar
Harbin
Changchung
Jilin
Vladivostok
Fuxin
Fushun
Sapporo
Baotou
Beijing
Sea of Japan
NORTH KOREA
Pyongyang
Yinchuan
Tianjin
Taiyuan
Sendai
Kaifeng
Seoul
Tokyo
SOUTH KOREA
JAPAN
Qingdao
Xian
Osaka
Hefei
Mianyang
Shanghai
Kita-kyushu
Wuhan
Ningbo
Yueyang
Guiyang


服务
全球
精益求精 服务全球

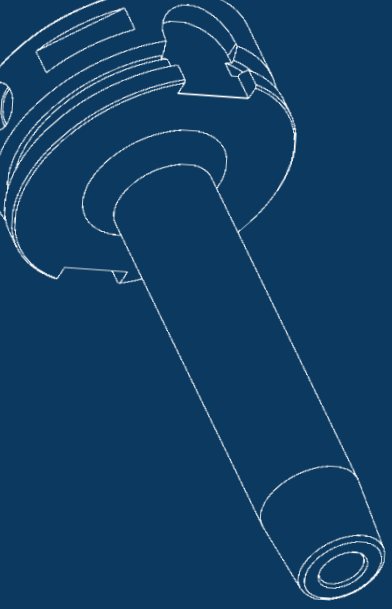

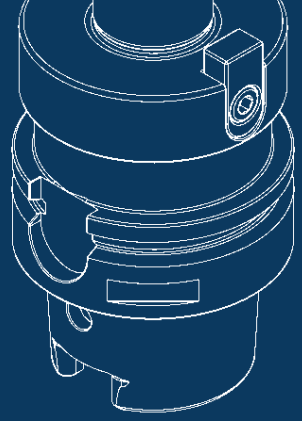

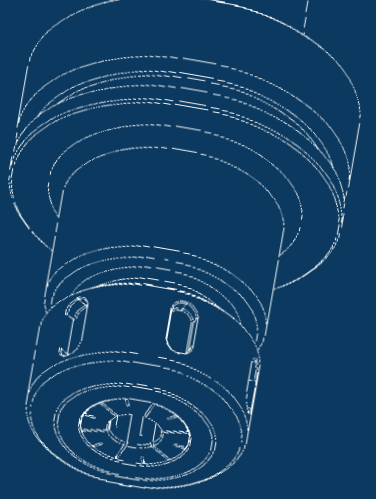

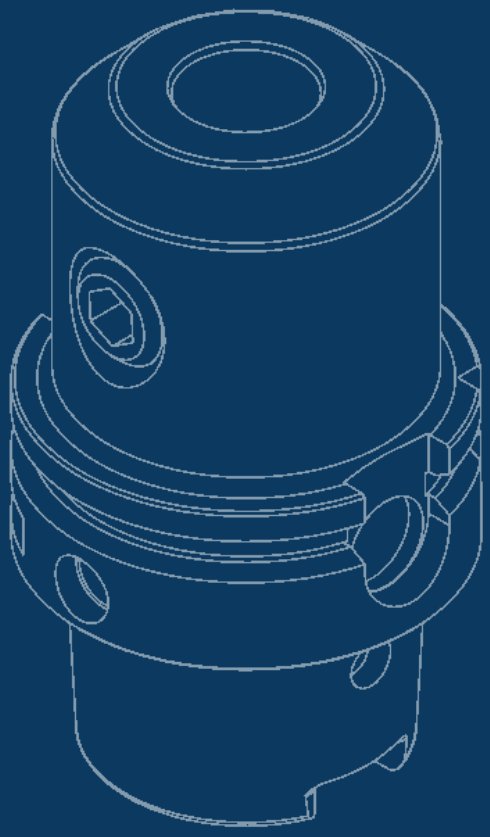

For more informtion, please feel free to

Consult Yiwu Ruiwen Hardware Company!

Contacts: +86-19158283391（Miss Anna）

Email: 19158283391@163.com

REVEN

Tools & Carbide

样本中的产品数据和实物如有变更，本公司不便另行通知，请谅解！
如果产品图片与实物不符，以实物为准。
If any recision of the technical data and picturesin the catalogue,excuse us not goving further notice.Please refer to the sample if there isdifference between the picture and sample