Mattia Ferrari Fenini

PRODUCT DESIGNER

PORT
FOLIO

Mattia
Ferrari Fenini

I recently completed a three-year degree specialising in Product Design and Technologies.
I have an enterprising and determined personality, I can count on a strong motivation and desire to grow professionally as a Designer, contributing proactively to the achievement of individual and team goals.
I have experience in team management as a leader in the realization of a start-up, where I learned negotiating skills and strong technical vision combined with a spirit of adaptation and solid management skills.
I have experience in research and development of a product up to the actual business plan and the production and sale of the product.
In addition, I have also had presentation experiences with several professional investors.

Rhinocheros	4 years
Vray	2 years
Keyshot	1 year
Photoshop	4 years
Ilustrator	4 years
Indesing	4 years
3ds Max	2 years

- Team working ability
- Group organization
- Good in free speeches
- Technical drawing and 3d modelling
- Technical knowledge of components
- Hand craft and 3d printing prototyping

Index

Furnitures

Cantilever Cork

Holand Kitchen

Acessories

SS 3 Speaker

Moon shell

Illy lemon squesser

Gimmble 1.0

Roto Speaker

Smart Tech

Si-Stem

Remì Start-up IED project

Air-Blow Politecnico master

Hand prototype

Sisma

Architectural models

Project 01
Cantilever Cork

Compleatly made out of renewable material Easy to manifacture, easy to transport, easy to assemble ...

With all the conforts of a cantilever chair.

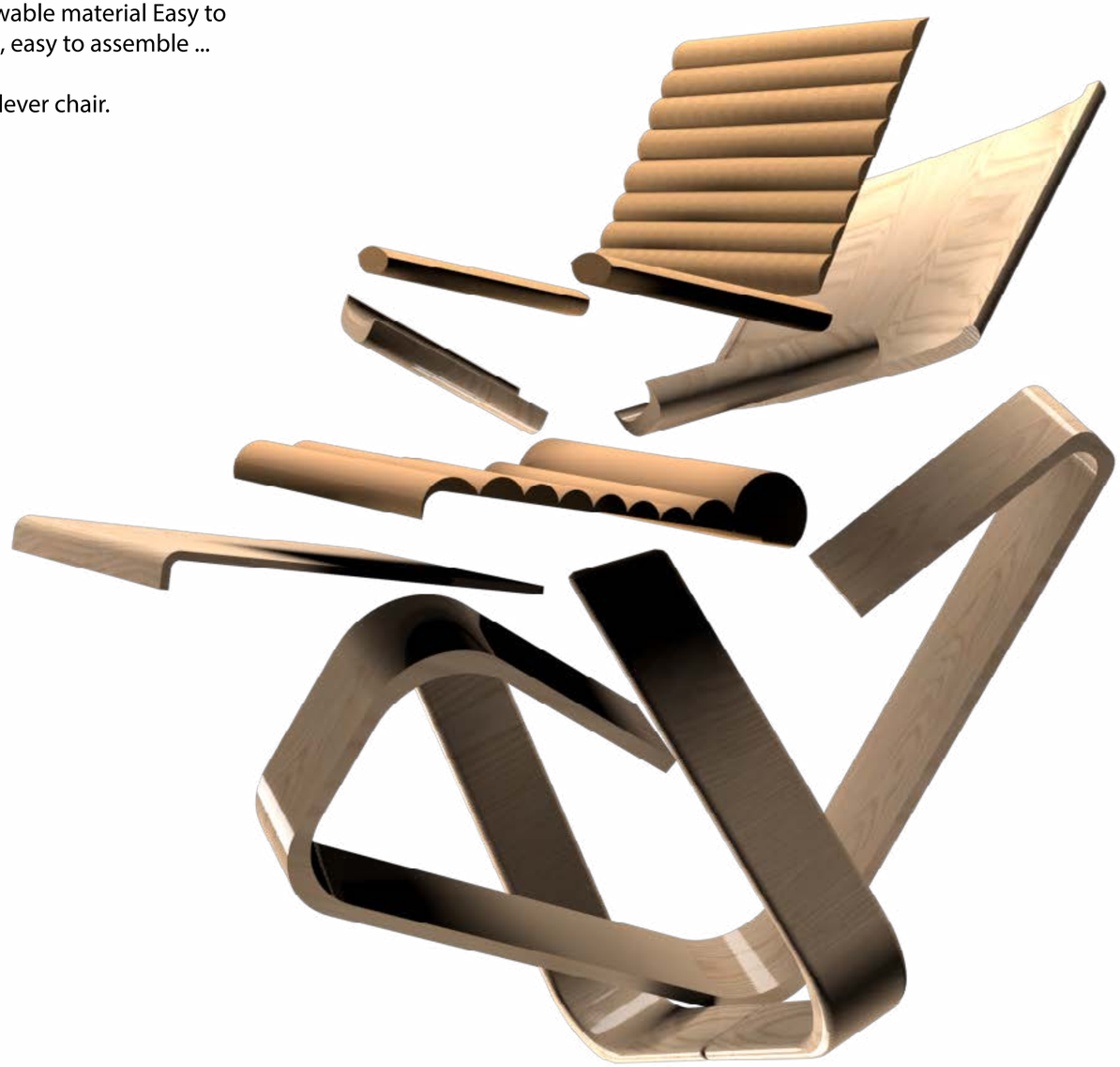

Sketches

Tech Drawings

As we can see from the following drawings the chair doesn't have a to complex geometry and by doing the section we can understand that the structure is made by ash bars all of the same size and thickness.

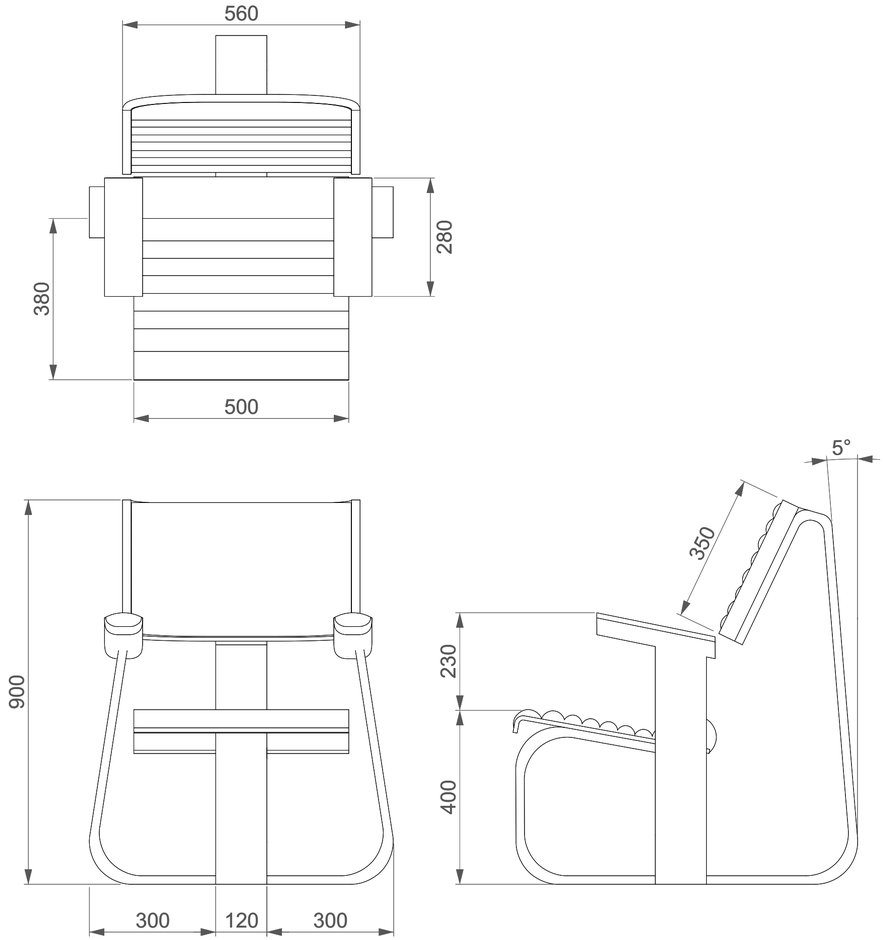

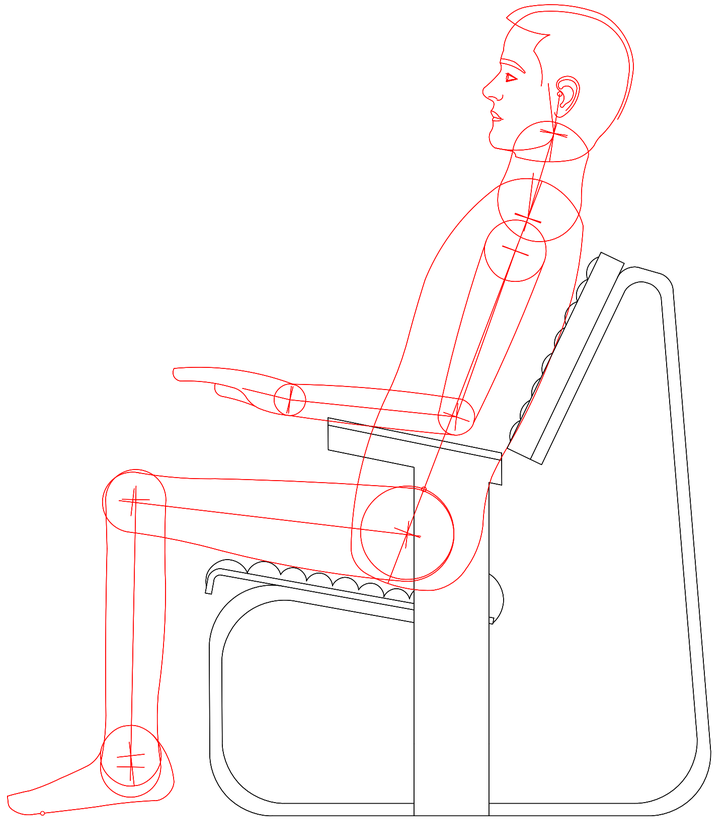

Disassembly

Not only the material are thought to be environmental friendly but also the packaging and transportation are thought to minimize the footprint.

The chair can be packaged in a flat pack this means that in one single van there can fit a whole stack of chair.

This means that there are less van needed for the transportation.

Material

Ash Wood

Cork

Color

Light

Dark

Project 02
Holand Kitchen

Build your own kitchen
Start from small and make it
adjust to your changes

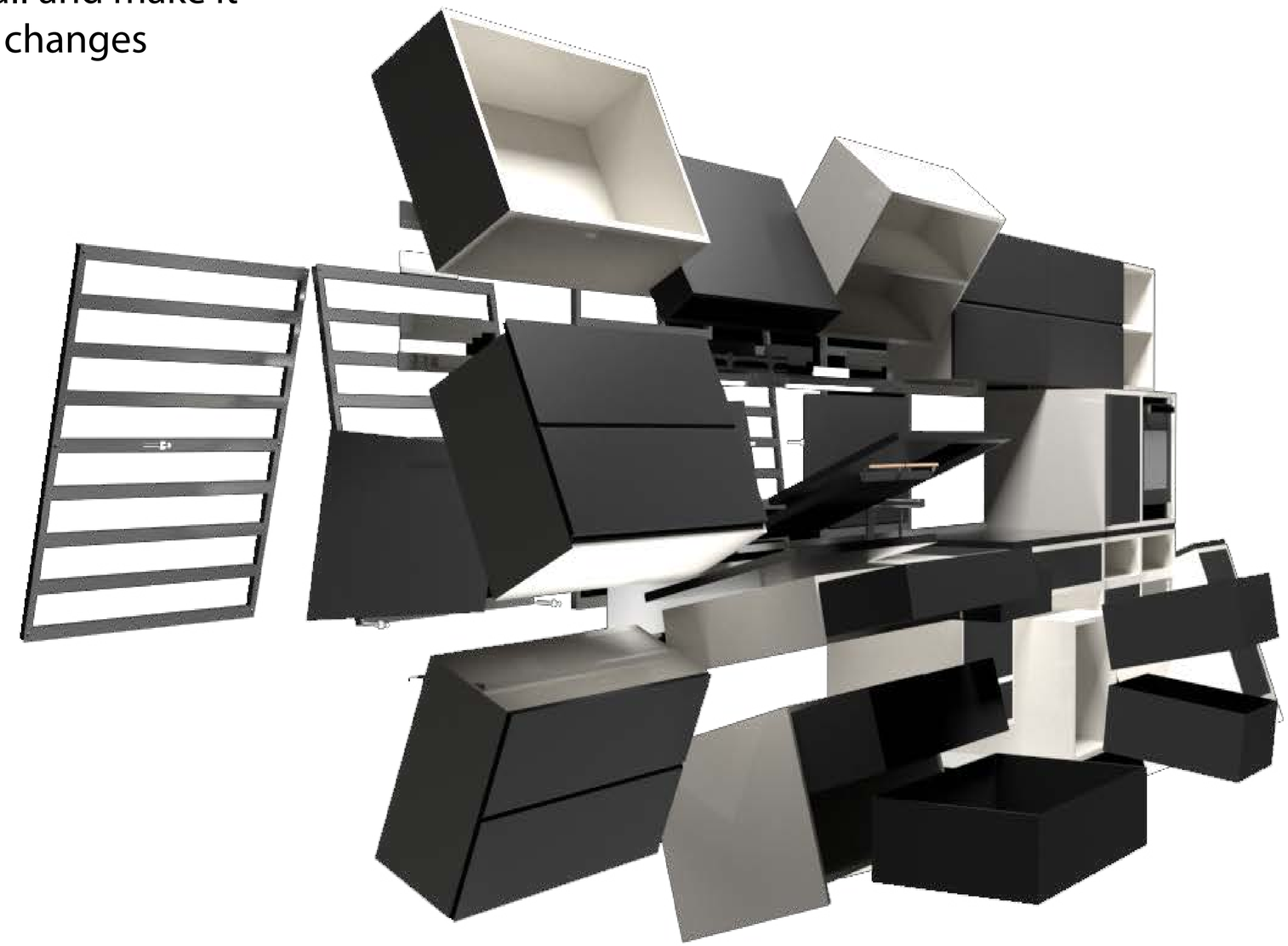

Functionality

Detachable modules, to be modified when you want as you want.

Thanks to the completely disassemblable and readjustment modules, the kitchen be adjusted also after its assembly from the user or from our service.

Modules arrive in flat packs easy to assemble.

Functionality

To give the most work space possible i decided to make the hobs foldable dependently and adjustable.

Finishings

Material

Ash Wood

Stainless Steel

Color

Dark Grey

Grey Green

See Green

Project 03
SS3 Braun Speaker

Let the sound surround you everywhere
you go no matter where you are

Sketches

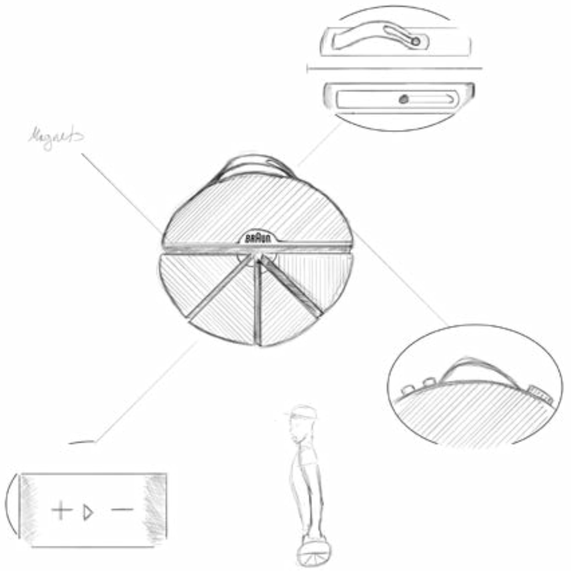
Magnets
BRAUN

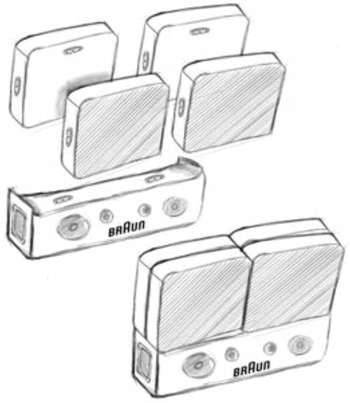
BRAUN
BRAUN

BRAUN

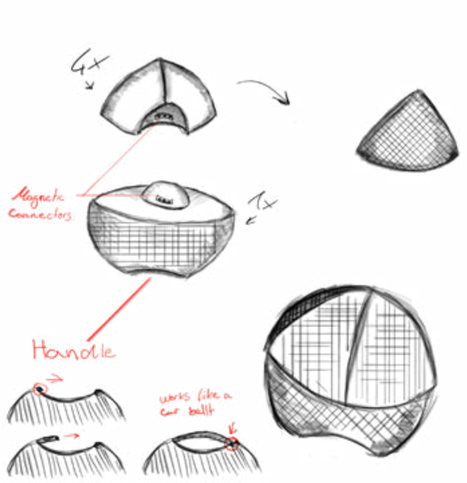
4x
Magnetic Connectors
1x
Handle
works like a car belt!

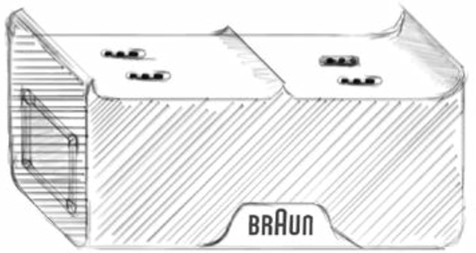
BRAUN

Moodoard

BRAUN
BRAUN

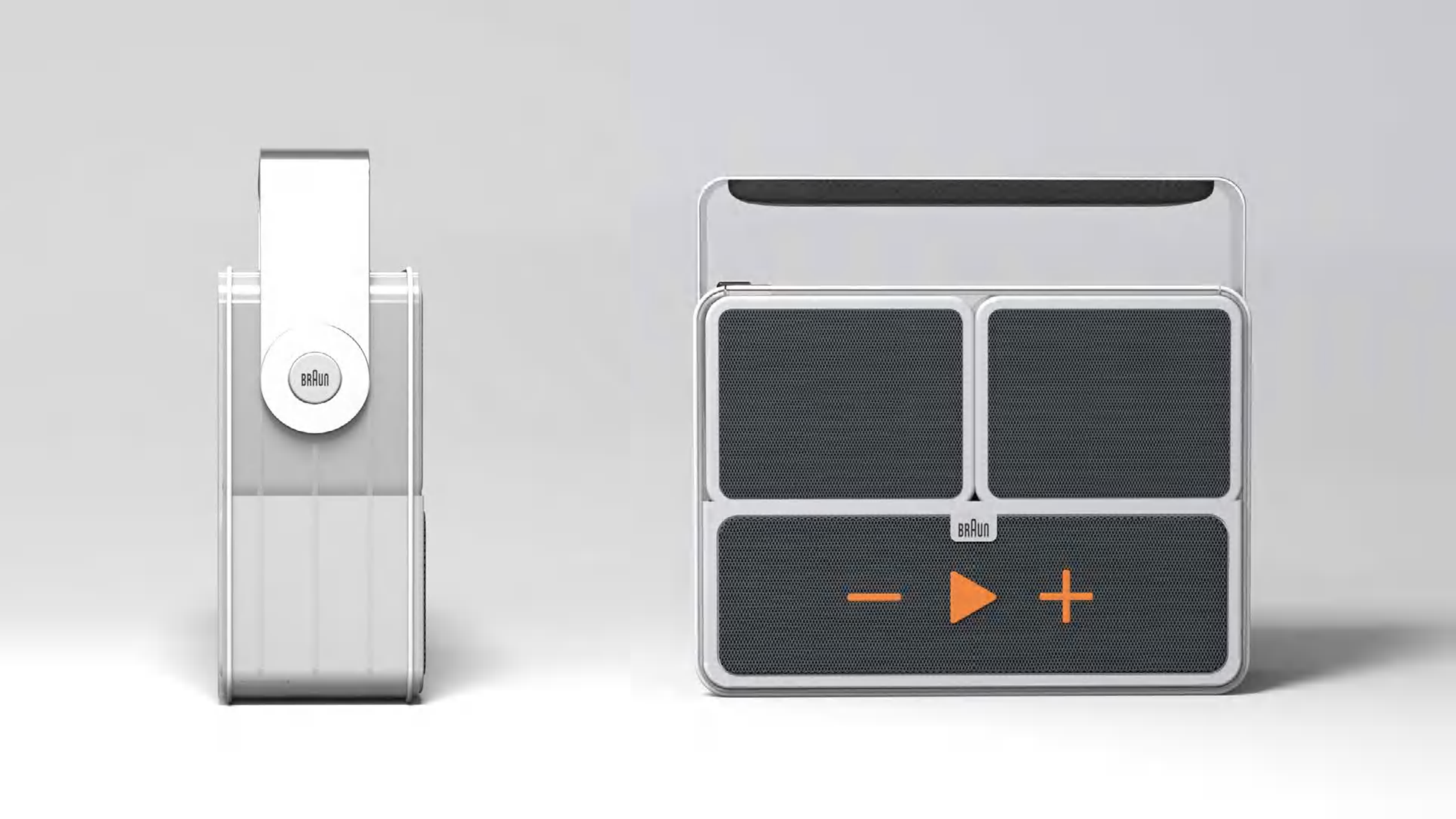
BRAUN
BRAUN

Project 04
MoonShell

Feel always protected with a modern
and stylish outlook

Project 04

100 ideas

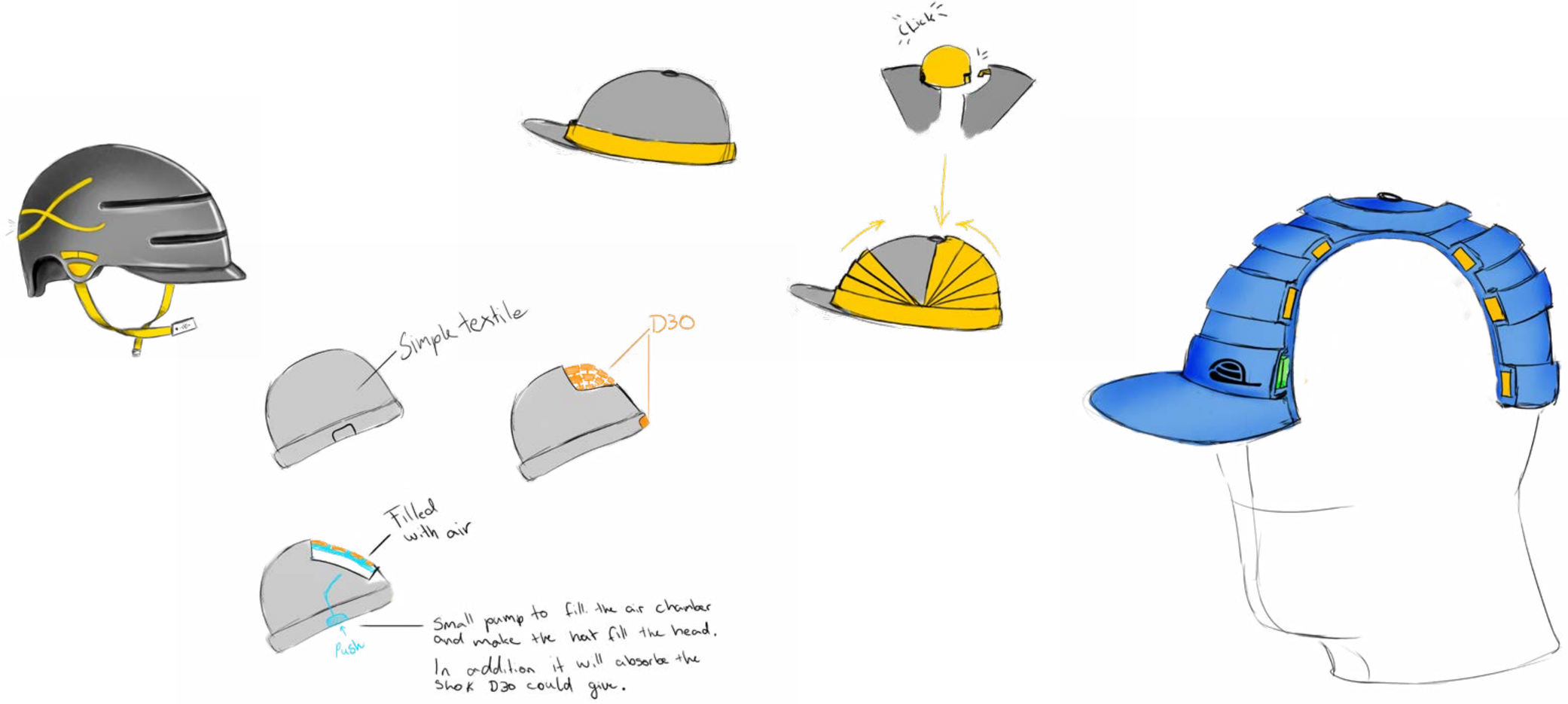

Concept

MoonShell is a foldable bike helmet which feels soft to the touch like a normal sun hat. The idea was to make a bike helmet which at first sight would not look like a helmet. While on the other side it is equipped with different technology's to aloud a safe road.

Thanks to the app you can personalize the 3 buttons to add any function like music, maps or for answering the phone.

Mood Board

Material

Dark Grey

Grey Green

See Green

Colour

Grey

Black

Green

Project 05
Gimble 1.0

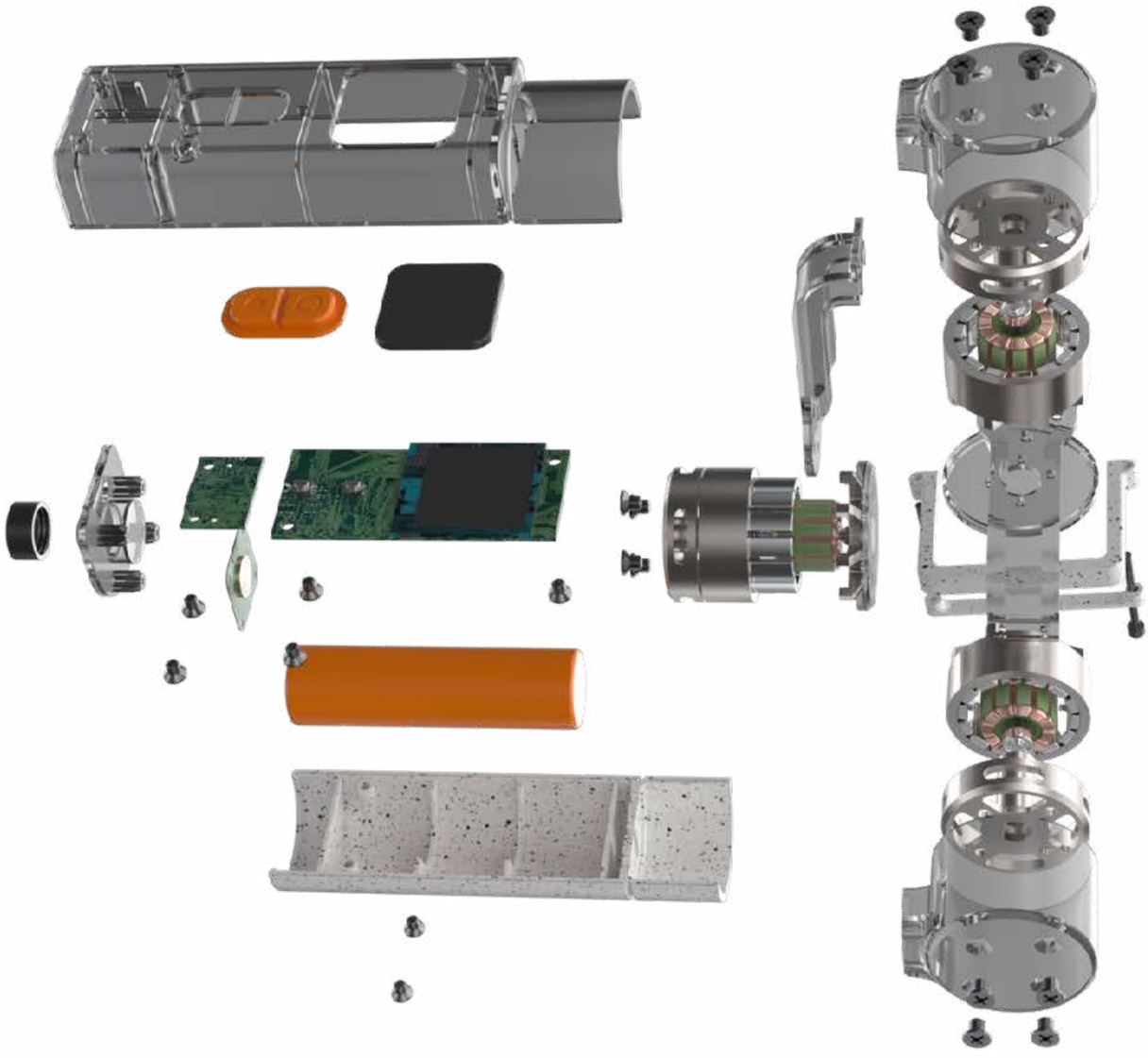

GIMBLE 1.0

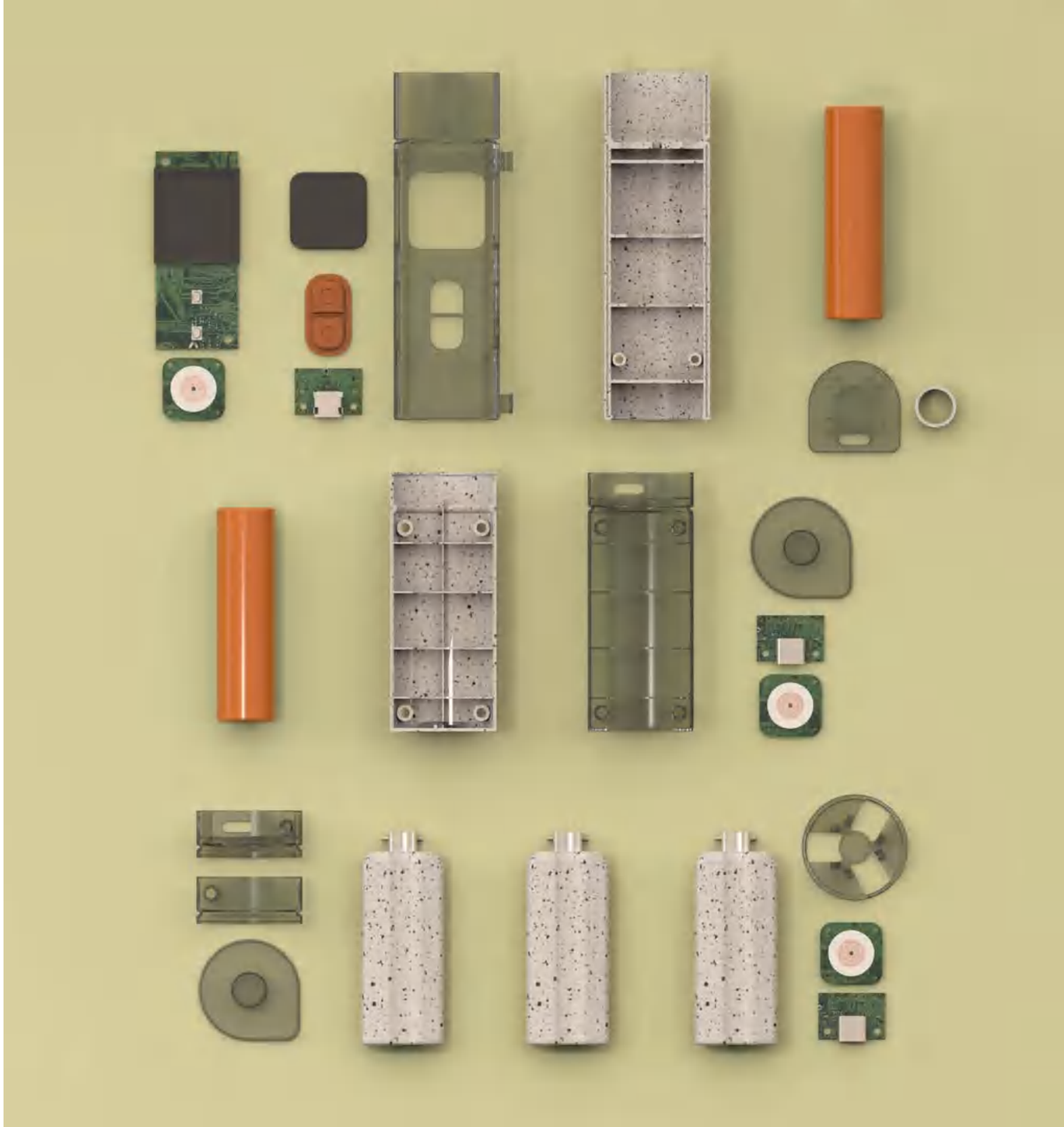

Project 06
Roto Speaker

Project 07
Si-stem

Let Si-stem take care of your plants
No worries no messes no more dead plants

Tech Drawings

N.	Description	Material	Q
24	USB - c port	Std	4
23	Pumps	Std	4
22	Motherboard 2 and PSU	Std	1
21	Leds	Std	1
20	Water pump	Std	1
19	Screws 2	Std	4
18	Peltier cell	Std	1
17	Screws	Std	4
16	Radiator and vent	Std	1
15	Motherboard 1	Std	1
14	Male base	ABS	1
13	Female base	Polycarbonate	1
12	Water tank holder	Polycarbonate	1
11	Water tank	Polycarbonate	1
10	Outer shell	ABS	1
9	Water slide	Polycarbonate	1
8	Radiator n2	Alluminum	1
7	Radiator holder n2	Polycarbonate	1
6	Air pass	Polycarbonate	1
5	Radiator wall	Polycarbonate	1
4	Radiator cover	Polycarbonate	1
3	Base for screen	Polycarbonate	1
2	screen	Polycarbonate	1
1	Wings	ABS	1

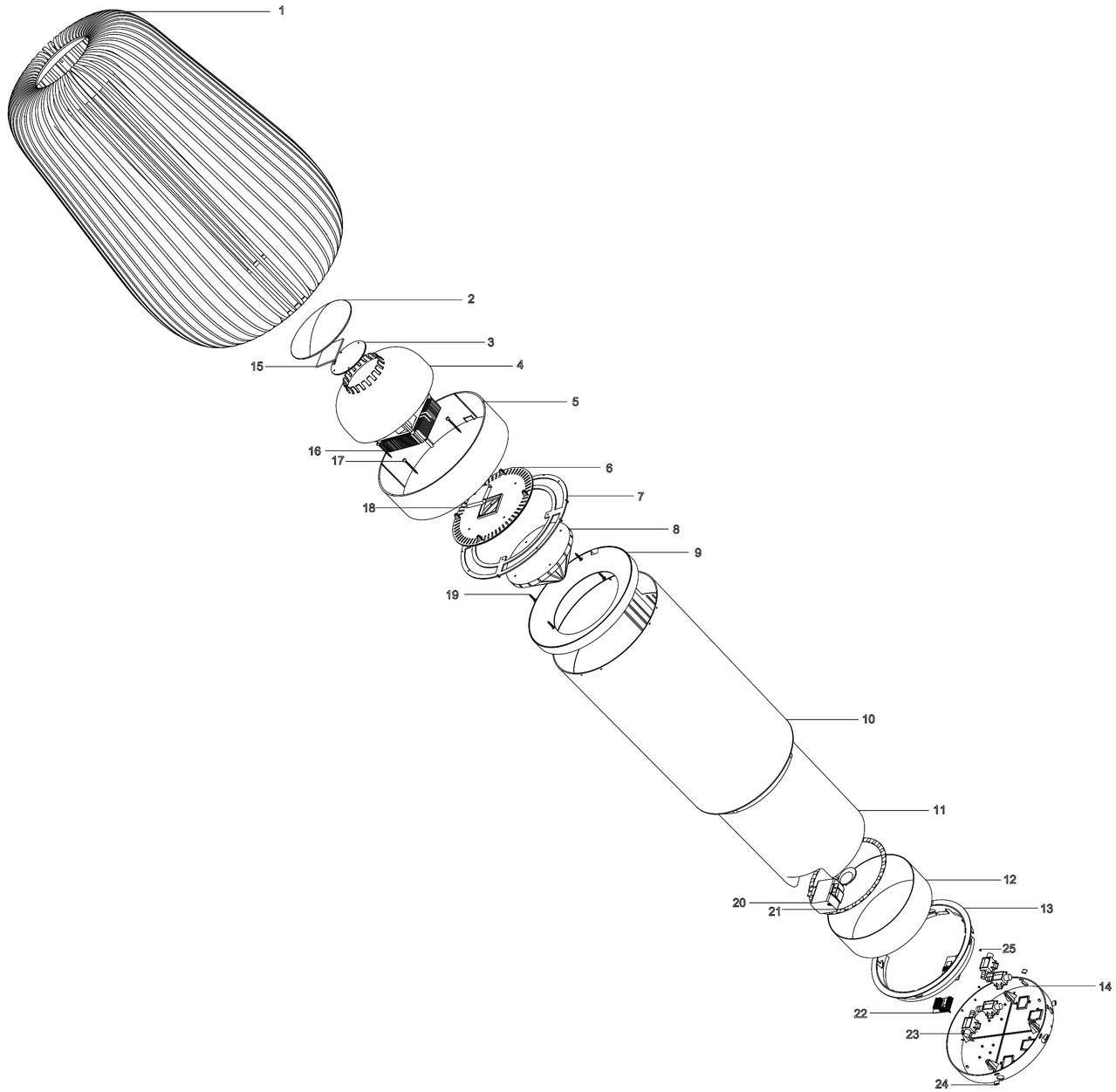

Functionality

Si-stem is able to collect water from the humidity thanks to the improved radiator able to collect 250 ml of water every day is present in the air.

Its disasseblable to aloud the users to clean the inner parts from dust and pets hair.

Functionality

Si-Stem is a smart watering system with a advanced redesigned condenser which is able to collect the amount of water to take care of a maximum of 4 plants.

Its a smart device thanks to its feature which is able to recognize what plant its watering and dependently to the plant it will adjust and water it in the right way.

So you basically dont have to do

Project 08
Remì

remì

remind me

Start-up Project
Remi

Remì is the first digital photo album, the first MetaAlbum.

With remì we try to give a new purpose to the photos that take part in the construction of us our identities, allowing him to meet us and thus stimulating us to approach these photos in a whole new experience, creating a new emotional dimension between us and our photos

Remì is built on an analogy with the albums of yesteryear:

Silent and ever present, it has the function of keeping your photos in perfect condition until the moment when you decide to let yourself be welcomed inside that ethereal place of memories where you can reconcile with the past.

By imitating gestures and practices, and adapting them to what is considered normal today, making a healthy and joyful practice part of our daily lives.

Technology used

Metadati

Artificial intelligence

Metadata is additional information, contained within digital images, containing technical details of the photo and identifying the equipment used and the photographer who took the photo.
But in other cases we can also have metadata of location, weather, travel speed and of course audio if there is one.

Artificial intelligence instead is able to pull out data and information from photos.
Image recognition is a generic term to describe a collection of related artificial vision activities involving the identification of objects in digital photographs.

These two together can perfectly understand the environment of the photo taken.

Luogo Meteo Velocità Ora Audio Dispositivo di scatto

Technical Drawing

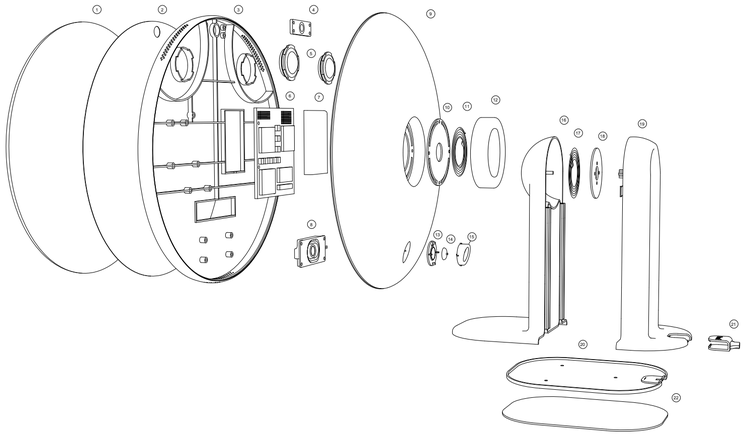

Nr.	Description	Material	Q	Note	Dwg. Nr.
22	Ground Grip	Rubber	1		
21	Charging doc	Rubber	1		11
20	Lower Base	Std	1		10
19	Back piece base	ABS	1		9
18	Wireless charging holder 2	ABS	1		8
17	Wireless Sender	Std	1		
16	Front piece base	ABS	1		7
15	Button	ABS	1		6
14	Membrane button	Std	1		
13	Button Cap	Std	1		5
12	Back grip	ABS	1		4
11	Wireless charging	Std	1		
10	Wireless charging holder	Abs	1		3
9	Back Screen Structure	Std	1		2
8	Low Frequency	Std	1		
7	Lion Batery 2000 mhA	Std	1		
6	Motherboard	Std	1		
5	Mids	Std	1		
4	Cmaera Sensor	Std	1		
3	Screen Structure	ABS	1		1
2	LCD Screen	Std	1		
1	Protection Screen	Gorilla Glass	1		

IED	Istituto Europeo di Design Milano - product Design A.Y. 2021/2022				
	Docenti - prof. Davide Piersanti, Ginevra Franchi, Giorgio Ferrari, Gaia Anselmi Tamburini				
	Gruppo Conquistadores M.Casagrande, F. Cecchini, M. Ferrari Fenini	Classe: Tesi Startup			
06/06/22		mm	1:1	A1	Dwg. Nr. 0
Exploded View					

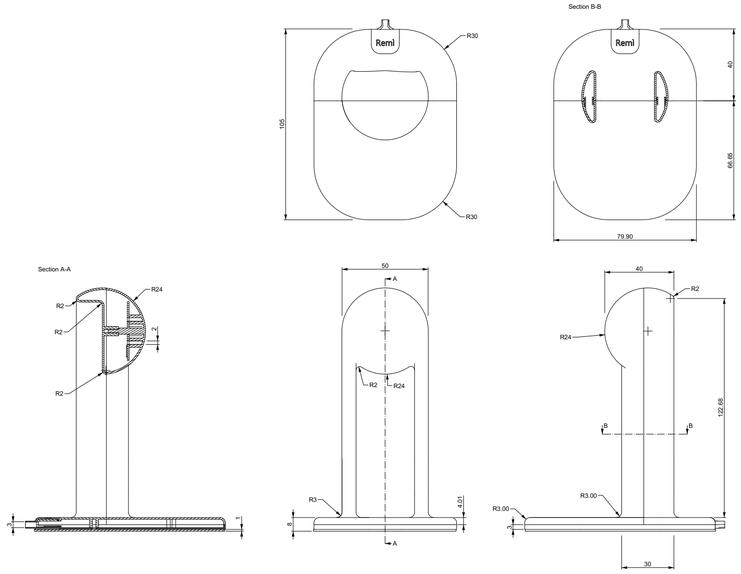

IED	Istituto Europeo di Design Milano - product Design A.Y. 2021/2022				
	Docenti - prof. Davide Piersanti, Ginevra Franchi, Giorgio Ferrari, Gaia Anselmi Tamburini				
	Gruppo Conquistadores M.Casagrande, F. Cecchini, M. Ferrari Fenini	Classe: Tesi Startup			
06/06/22		mm	1:1	A2	Dwg. Nr. 13
Assembly					

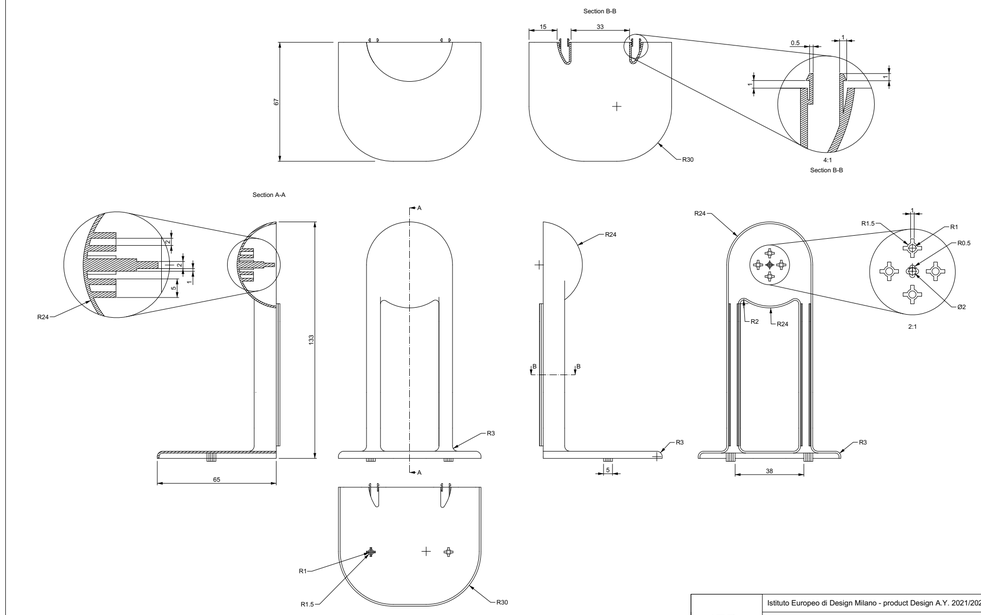

IED	Istituto Europeo di Design Milano - product Design A.Y. 2021/2022				
	Docenti - prof. Davide Piersanti, Ginevra Franchi, Giorgio Ferrari, Gaia Anselmi Tamburini				
	Gruppo Conquistadores M.Casagrande, F. Cecchini, M. Ferrari Fenini	Classe: Tesi Startup			
06/06/22		mm	1:1	A2	Dwg. Nr. 7
Front piece base					

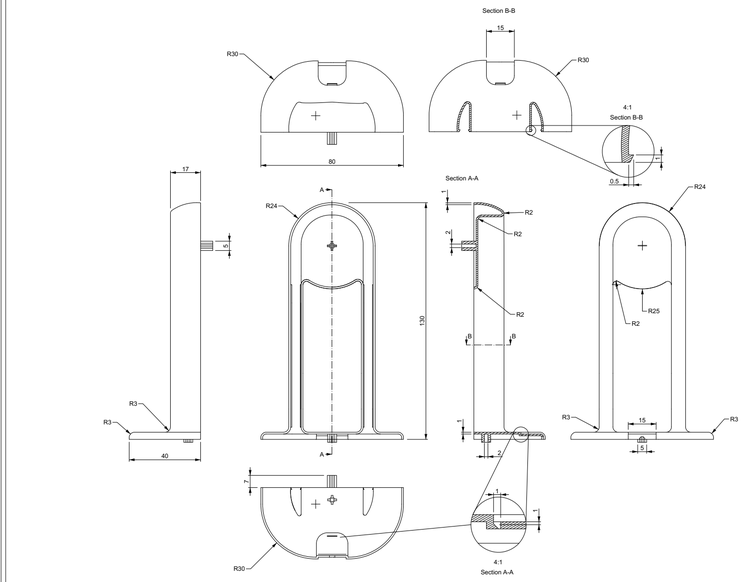

IED	Istituto Europeo di Design Milano - product Design A.Y. 2021/2022				
	Docenti - prof. Davide Piersanti, Ginevra Franchi, Giorgio Ferrari, Gaia Anselmi Tamburini				
	Gruppo Conquistadores M.Casagrande, F. Cecchini, M. Ferrari Fenini	Classe: Tesi Startup			
06/06/22		mm	1:1	A2	Dwg. Nr. 9
Back piece base					

Buisness model canvas

	2023	2024	2025	2026	2027
Vendite	- €	226.897,00 €	430.318,00 €	799.188,00 €	1.829.460,00 €
Totale ricavi	- €	226.897,00 €	430.318,00 €	799.188,00 €	1.829.460,00 €
Produzione	14.460,00 €	[illegible]	[illegible]	[illegible]	[illegible]
HR	68.445,00 €	96.525,00 €	134.275,00 €	194.800,00 €	501.200,00 €
R&D	30.000,00 €	5.000,00 €	8.000,00 €	0.000,00 €	5.000,00 €
Logistica	- €	667,00 €	1.060,00 €	2.560,00 €	6.800,00 €
Generali	83.700,00 €	98.040,00 €	124.200,00 €	247.900,00 €	408.000,00 €
Totale costi	196.605,00 €	229.548,50 €	272.115,00 €	533.589,50 €	1.081.942,00 €
EBITDA	-196.605,00 €	[illegible]	[illegible]	[illegible]	[illegible]

In this part of the project we had to make estimates with various suppliers to understand how much the molds for the production and all the components would cost.
In addition we also had to calculate the development costs of the ap and all the personnel that would be needed in addition to the R n D

Prototype

Project 09
Air-blow

Let Air-blow take care of your house

What it does?

Windblow is able to generate an air barrier that is able to stop any dust particles and allergens from entering the house. In this way, we have to put less effort into cleaning the house and obtaining fresher and healthy air inside the house.

It is completely automatic thanks to the self-cleaning air filters and all the needed sensors, such as the pm sensor, and wind, and movement sensors. Also, the power generated from the solar panel is completely auto-sufficient.

How does it work

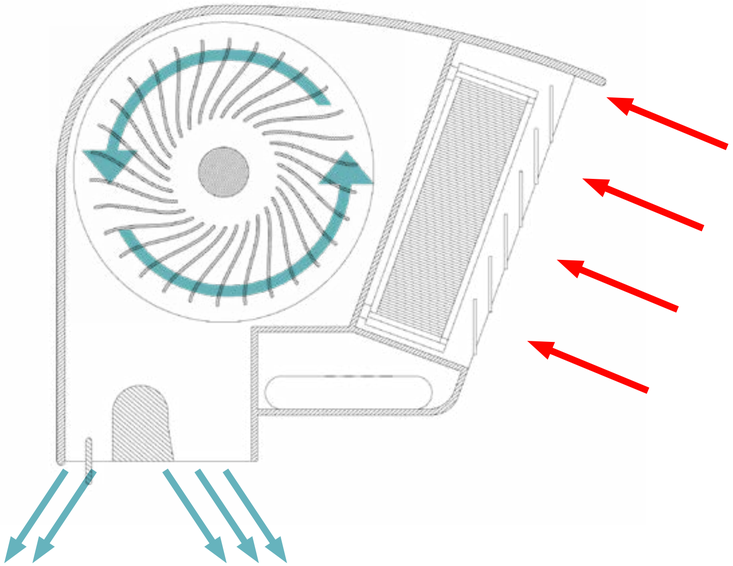

WORKING MODE:
on one side Wind-Blow will create a barrier which will prevent the dust to enter in your house, while on the other side it will throw fresh air inside of your house

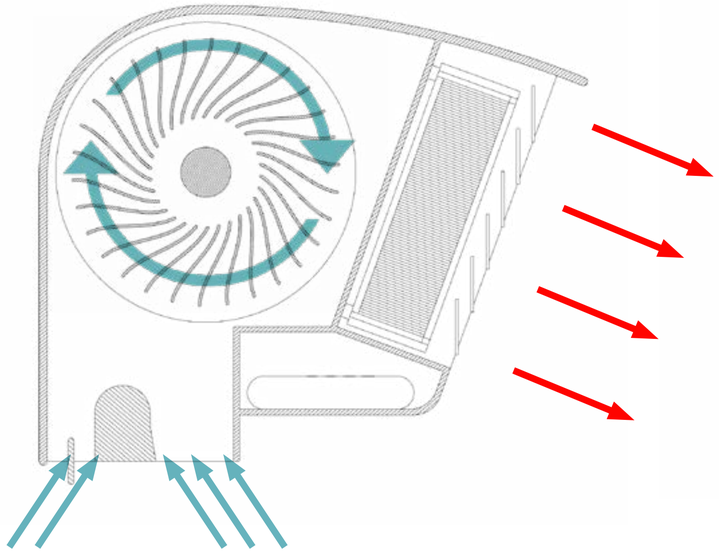

AUTOCLEANING MODE:
thanks to the vibration motor and the changing of the rotation of the turbine, the product will clean the filter by itself

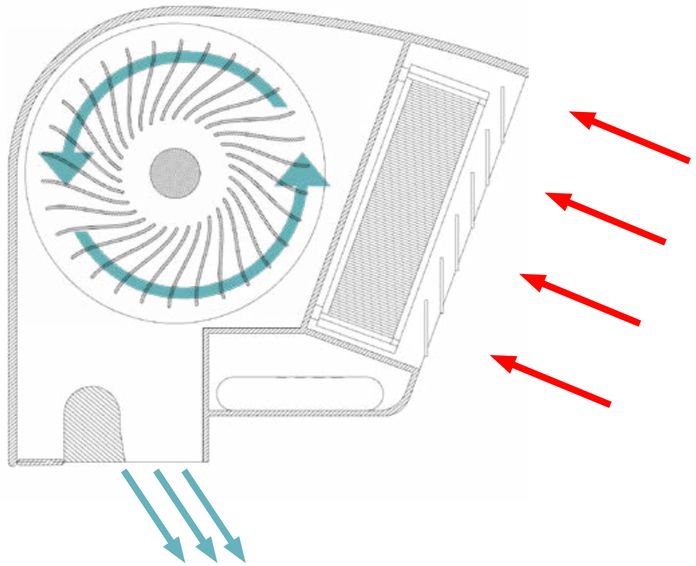

SAFETY MODE:
the device is able to analyse the amount of the pollutants in the air and close the wind entrance when it can't guarantee a perfect work

Desing

On the inside, there will be a sensor showcasing the current status of the air barrier. This light will be only activated when the person is approaching the window thanks to the movement sensor. The device is detachable from the wall and it can be recharged trough type c.

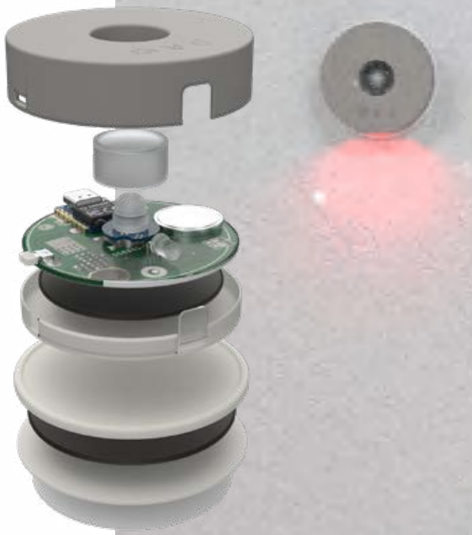

Project 10
illy orange sqeezer

illy

illy

Project 11
Water dispenser

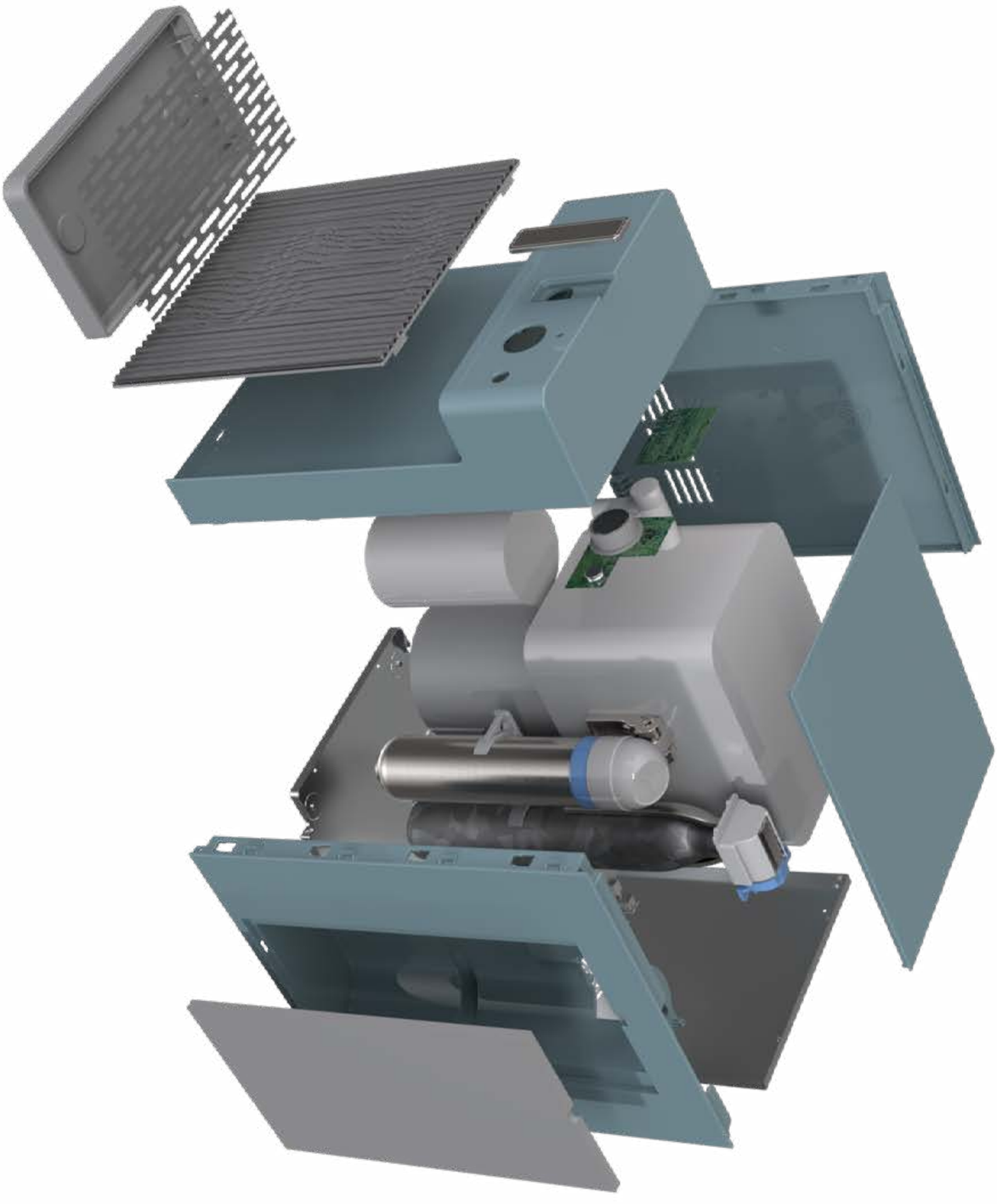

Moodboard

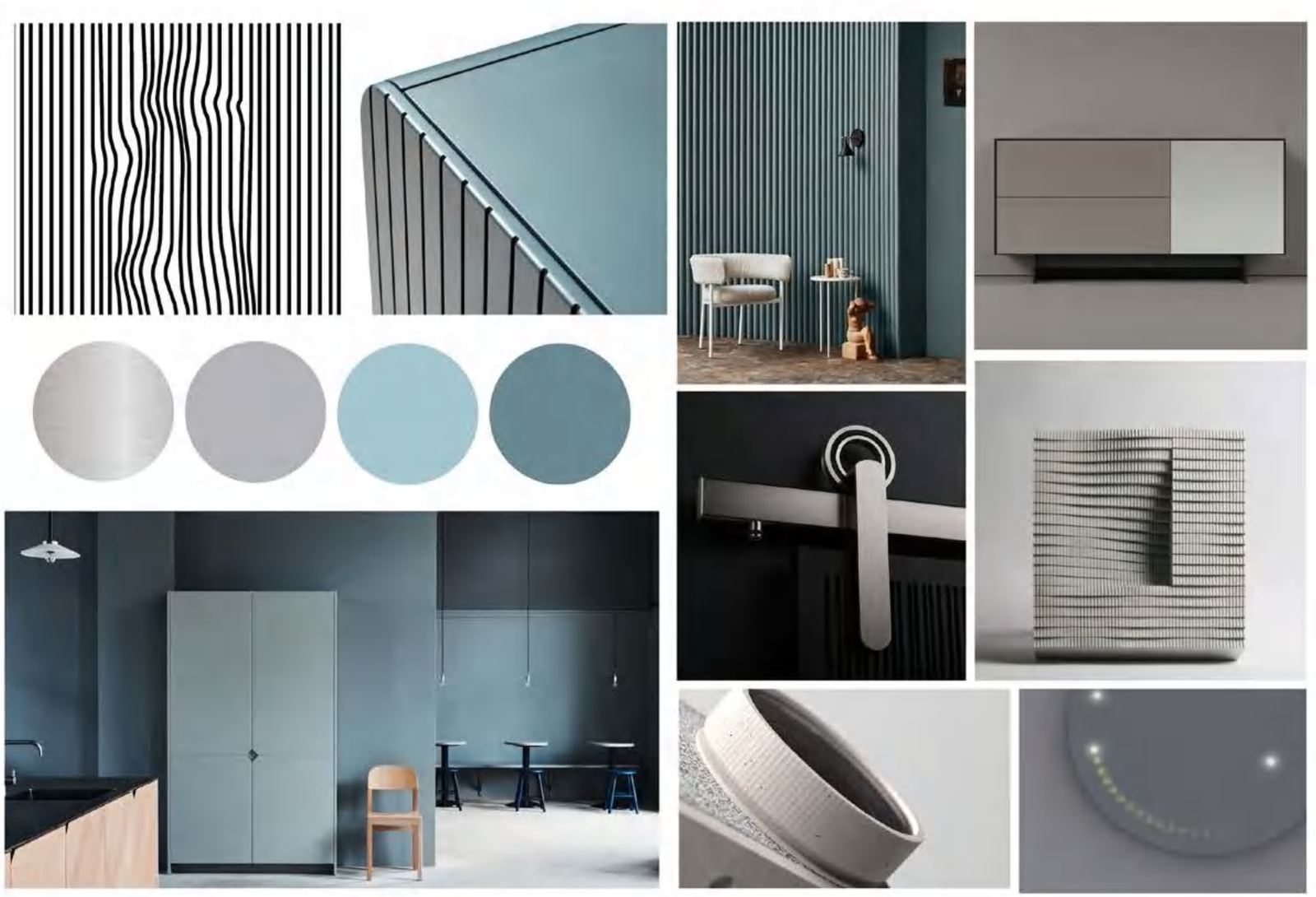

How it works

This water dispenser system is able to recognize the person and rememebr his favourite water taste

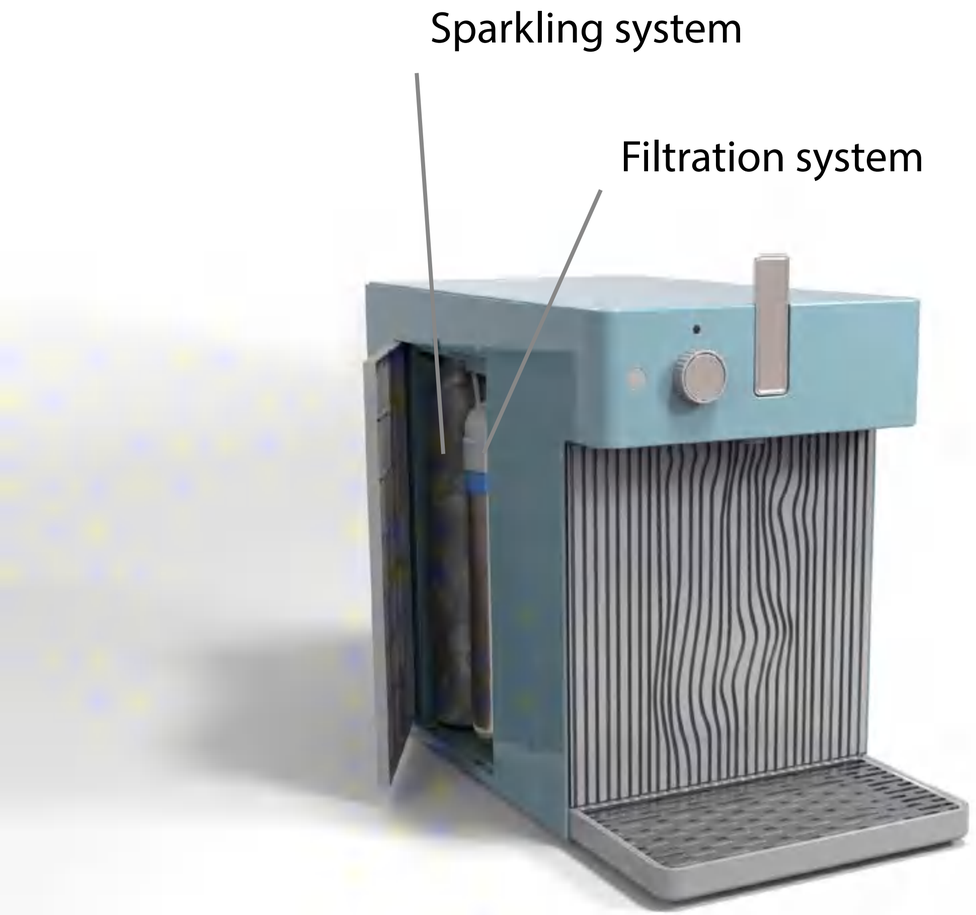

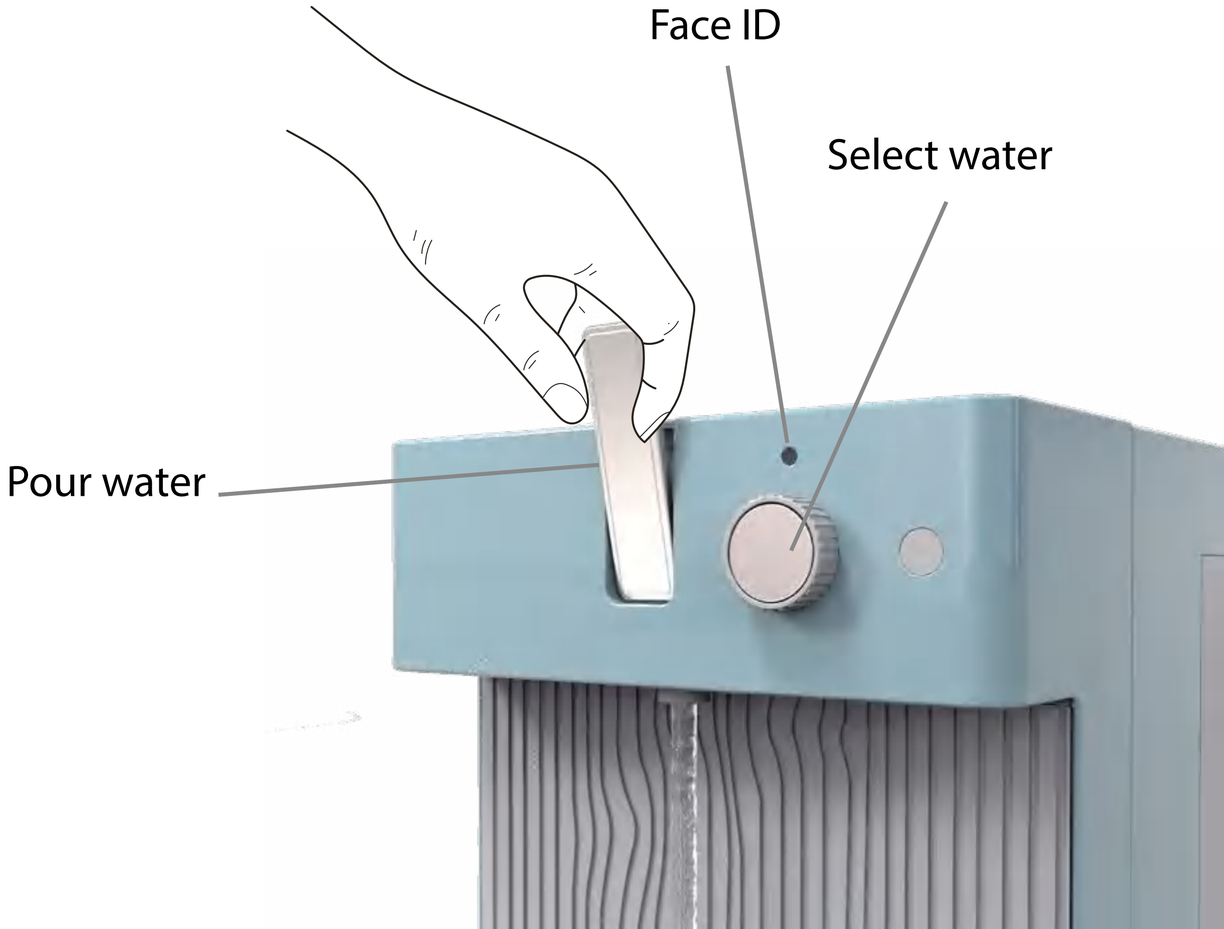

Project 12
Electrolux Ultimate

Manufacturing

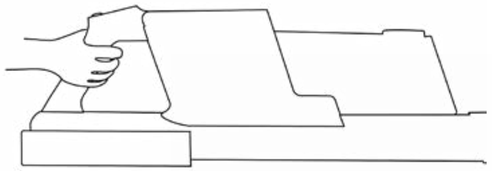

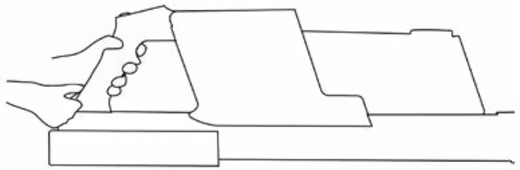

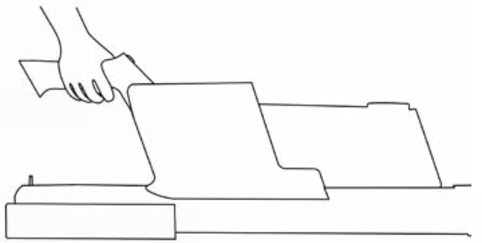

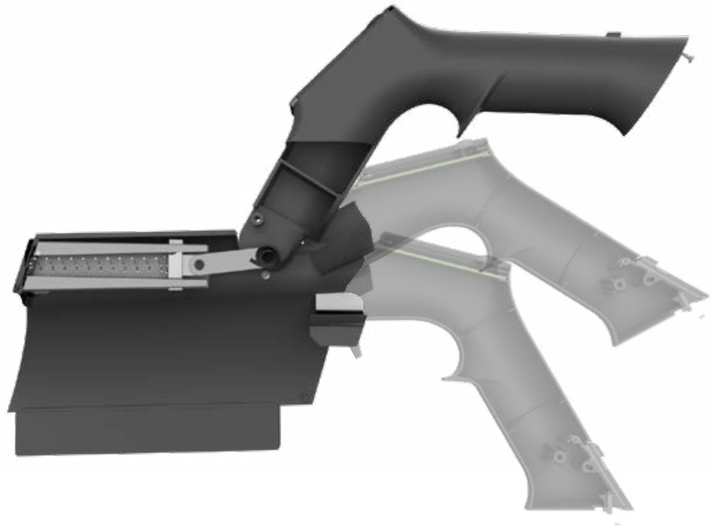

Manufacturing

The challenging part og this project was to design each part to be injected and assembled with the easyest way possible to increase the manufacturing speed.

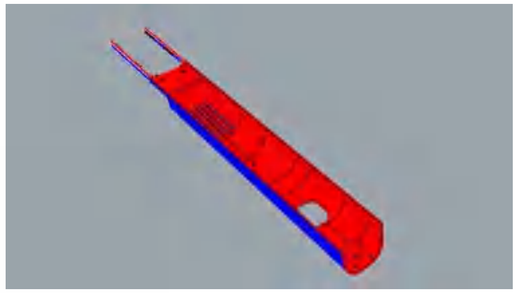

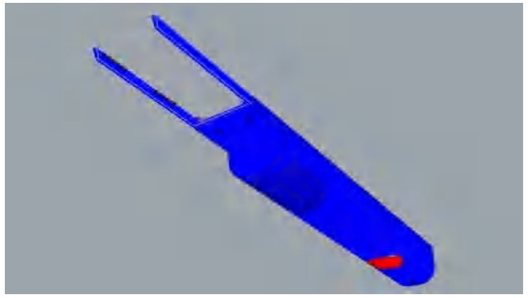

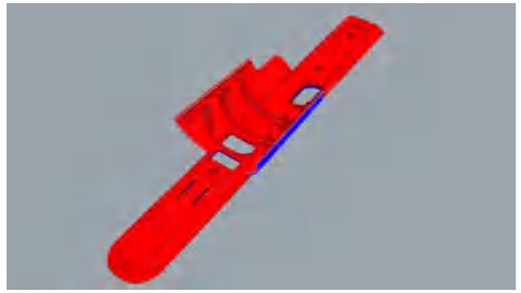

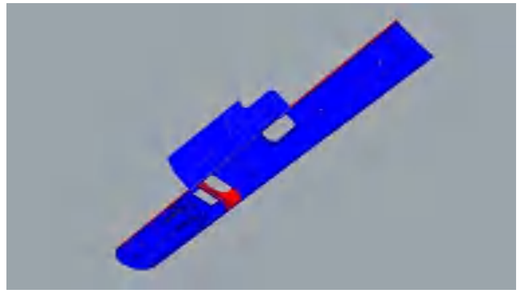

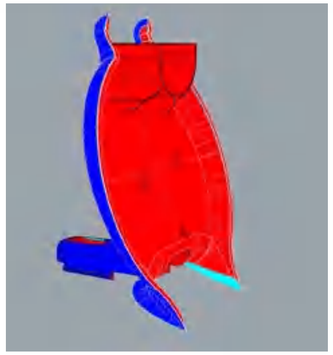

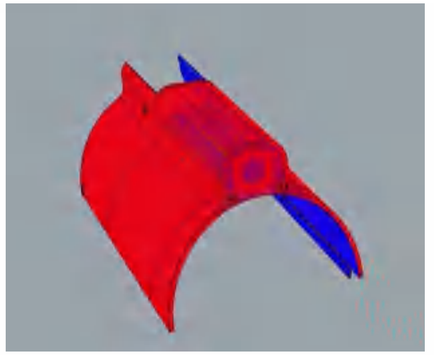

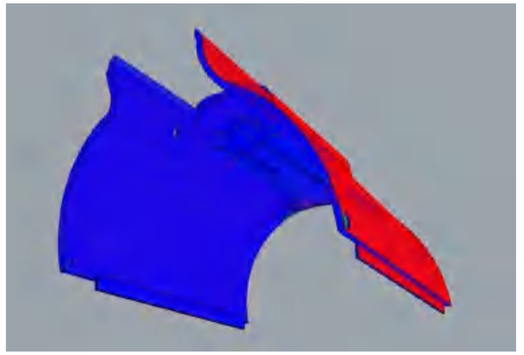

Assembly

Project 13
Sisma

Beat the quake and learn how to bring your creativity to action
Who survives wins !

"Toys are children's words and play is their language"

GARY L. LANDRETH

Our Vision

Construction is a field in which the kids experiment through failing.

We aimed to create an interactive game where kids could enjoy an exciting experience with a spark of education.

Sisma is a competitive - two opponents game in which kids can understand the logic of basic constructions against the power of nature.

Story

There has been a challenge from years ago to build a high, stable castle on the two most dangerous islands in the world.

No one has ever succeeded to build a structure able to overcome the supreme forces of the island.

The man able to build the highest castle that could withstand all the challenges will conquer the island.

How to play

ROLL A DICE
Number on dices indicates how many shapes you can use.

BUILD WITH SHAPES
Click on the button after each turn.

EARTHQUAKE IS COMING
Your castles will have to overcome unexpected earthquakes.

HIGHEST WINS
The winner is the one who stays with the highest, most stable castle.

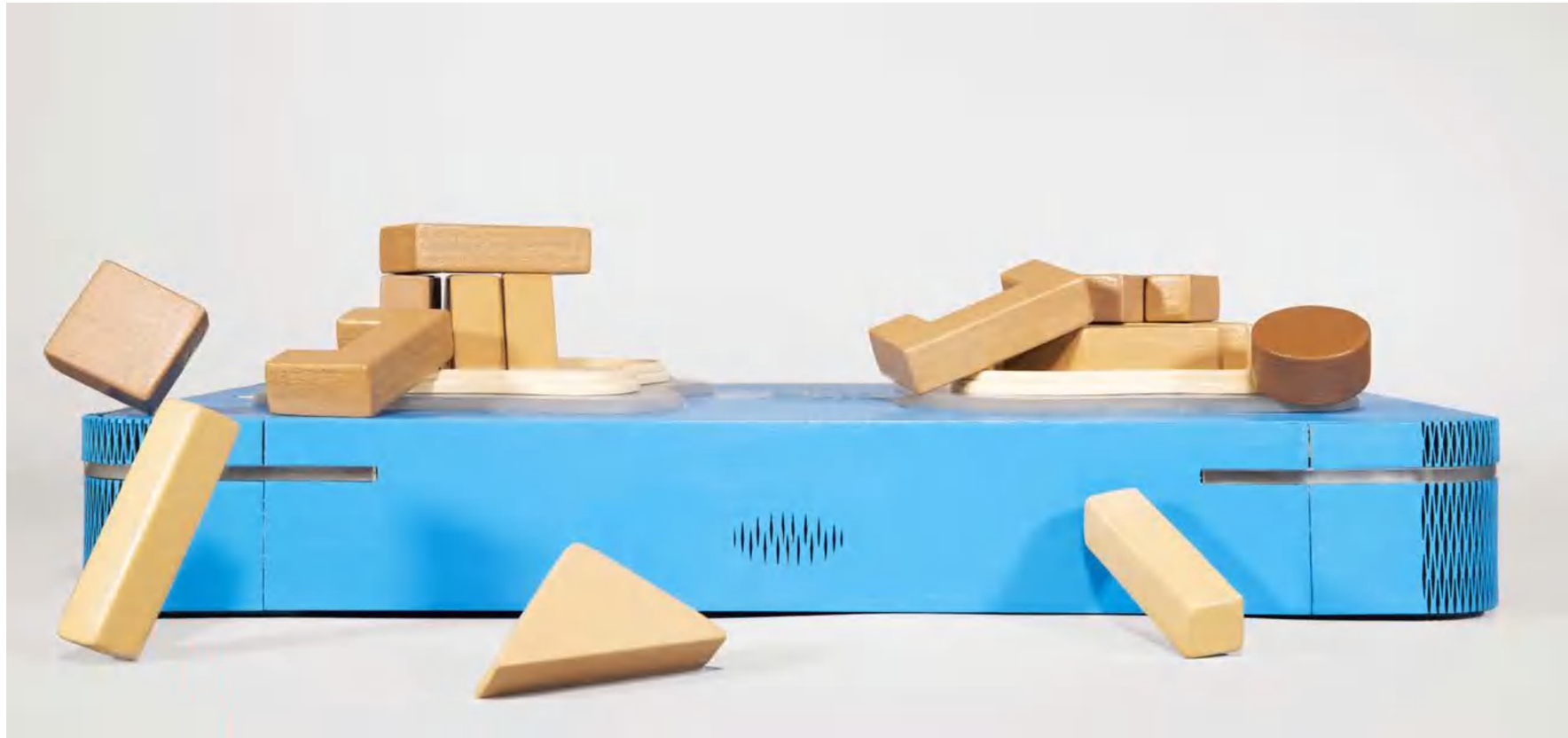

Professional Photo shooting

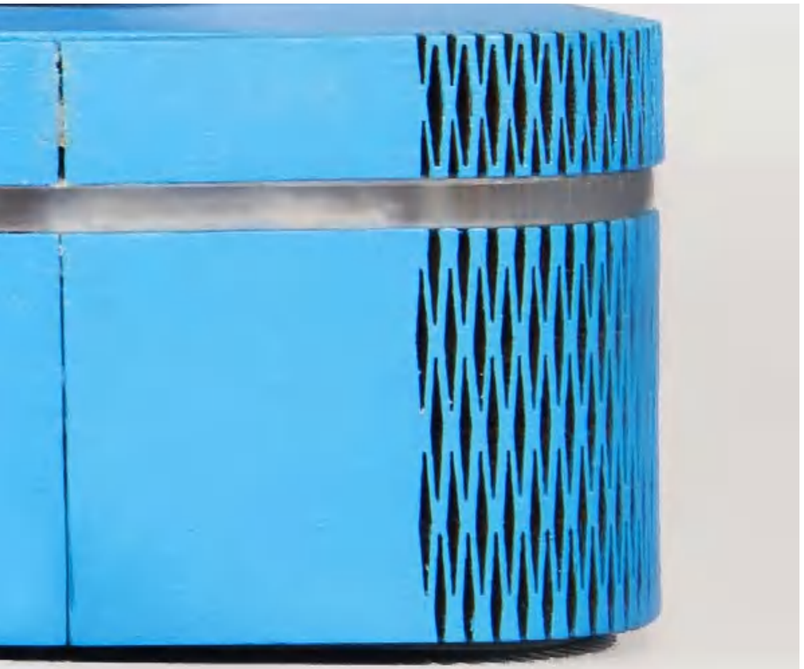

SIGMA

Model 01

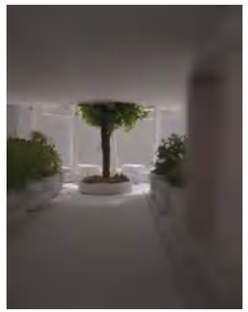

Model 02