www.sgexam.com

AI TONG SCHOOL

2021

PRELIMINARY EXAMINATION
PRIMARY 6

MATHEMATICS
PAPER 1
(Booklet A)

DURATION (Booklets A and B) : 1 h

DATE : 20 AUGUST 2021

INSTRUCTIONS

Do not turn over this page until you are told to do so.
Follow all instructions carefully.
Answer all questions.
Shade your answers in the Optical Answer Sheet (OAS) provided.
The use of calculators is **NOT** allowed.

Name: _____( )

Class: Primary 6 _____ **Marks:**

Paper 1 (Booklet A)	**20**

www.sgexam.com

www.sgexam.com

- BLANK PAGE -

www.sgexam.com

www.sgexam.com

Paper 1
Booklet A

Questions **1** to **10** carry 1 mark each. Questions **11** to **15** carry 2 marks each.
For each question, four options are given. One of them is the correct answer.
Make your choice (1, 2, 3 or 4). Shade the oval (1, 2, 3 or 4) on the Optical Answer Sheet. (20 marks)

---

1 What is two million six hundred and four thousand in numerals?

(1) 2 004 600
(2) 2 064 000
(3) 2 600 400
(4) 2 604 000

2 What is the value of $78 \div (19 - 17) \times 3 - 2 + 9$?

(1) 20
(2) 2
(3) 106
(4) 124

3 Which of the following is the likely capacity of a water bottle?

(1) 6.5 ml
(2) 65 ml
(3) 650 ml
(4) 6500 ml

www.sgexam.com

www.sgexam.com

4 A box contained a total of w red and yellow beads. There were 24 more yellow beads than red beads. How many red beads were there in the box?

(1) $(\frac{w}{2} - 24)$

(2) $(\frac{w}{2} + 24)$

(3) $(\frac{w + 24}{2})$

(4) $(\frac{w - 24}{2})$

5 Four boys shared 3 similar pizzas equally. What fraction of a pizza did each boy get?

(1) $\frac{4}{3}$

(2) $\frac{3}{4}$

(3) $\frac{1}{3}$

(4) $\frac{1}{4}$

6 In the number line, which number is represented by A?

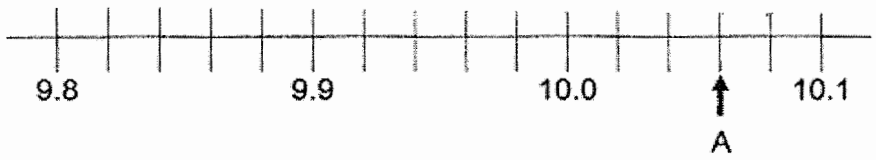

(1) 10.03

(2) 10.06

(3) 10.3

(4) 10.6

www.sgexam.com

www.sgexam.com

7 The average of three numbers is 17. When a fourth number is added, the average of the four numbers becomes 21. What is the fourth number?

(1) 33
(2) 28
(3) 51
(4) 84

8 The diagram shows three points P, Q and R on a square grid.

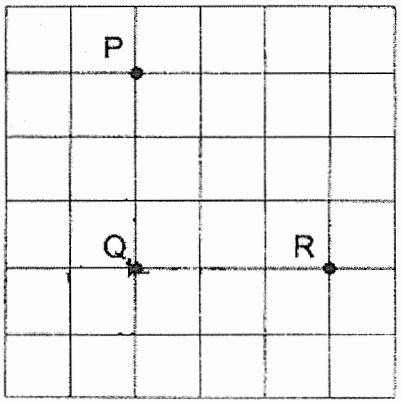

In which direction is R from Q?

(1) East
(2) West
(3) South-East
(4) South-West

9 A bank gives 0.5% interest per year. Mrs Ang deposits $3000 in the bank. How much interest will she receive at the end of one year?

(1) $150
(2) $15
(3) $1.50
(4) $0.15

www.sgexam.com

www.sgexam.com

10 A group of students were surveyed on their favourite sport. The table below shows the number of students who chose each sport as their favourite sport. Each student could only choose one sport.

Favourite Sport	Number of students
Volleyball (V)	4
Badminton (B)	10
Tennis (T)	2
Soccer (S)	24

Which of the graphs shows the correct representation of the students' favourite sport?

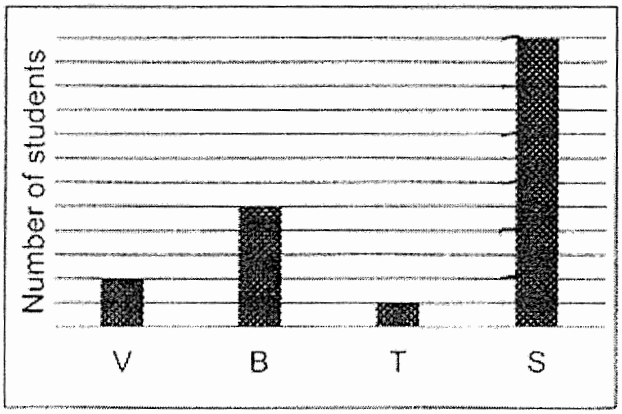

(1)

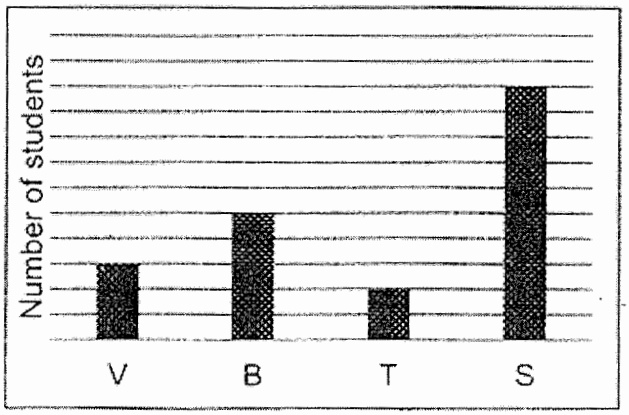

(2)

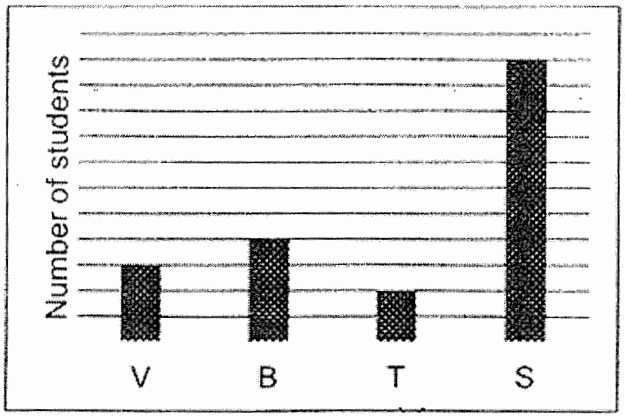

(3)

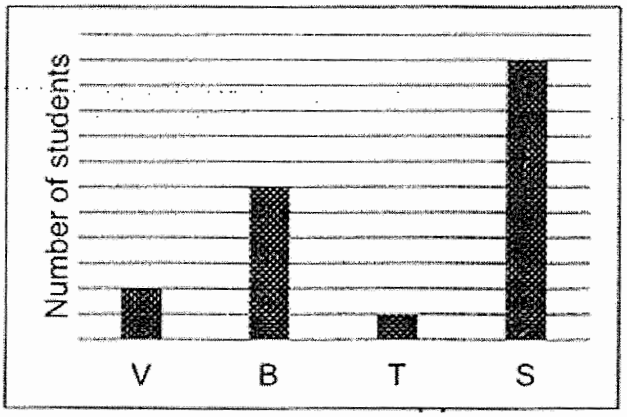

(4)

www.sgexam.com

www.sgexam.com

11 The solid below was made up of four cubes joined together. Raja painted the whole solid, including the base. Then, he separated the four cubes. What was the total number of the faces that were painted?

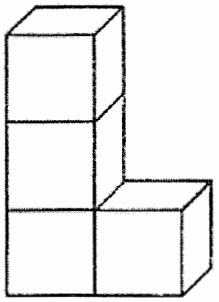

(1) 18

(2) 19

(3) 20

(4) 21

12 The figure below is made up of a semicircle and 2 squares.
The length of XY is 10 cm and the length of the larger square is 6 cm.
Find the perimeter of the figure. Give your answer in terms of π.

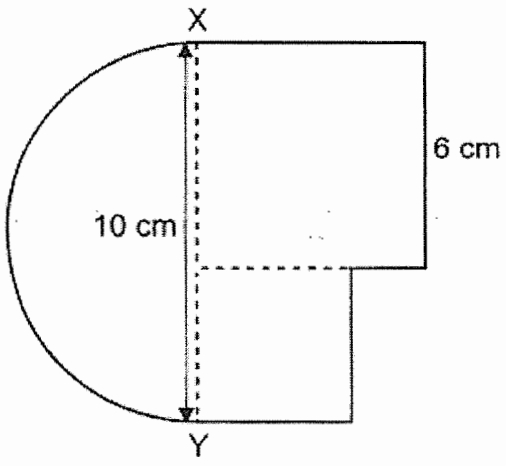

(1) $(5\pi + 20)$ cm

(2) $(5\pi + 22)$ cm

(3) $(10\pi + 20)$ cm

(4) $(10\pi + 22)$ cm

www.sgexam.com

www.sgexam.com

13 Yi Yang had 3 empty containers X, Y and Z. He poured an equal amount of water into each of them. After that, $\frac{1}{3}$ of X was filled with water, $\frac{1}{4}$ of Y was filled with water and $\frac{2}{5}$ of Z was filled with water. What was the ratio of the capacity of container X to container Y to container Z?

(1) 1 : 1 : 2

(2) 3 : 4 : 5

(3) 4 : 5 : 7

(4) 6 : 8 : 5

14 In the diagram, PQRS is a trapezium. PQ // SR. PR and QS are straight lines. ∠PQS = 27°, ∠PSR = 59° and ∠PRS = 38°. Find ∠STR.

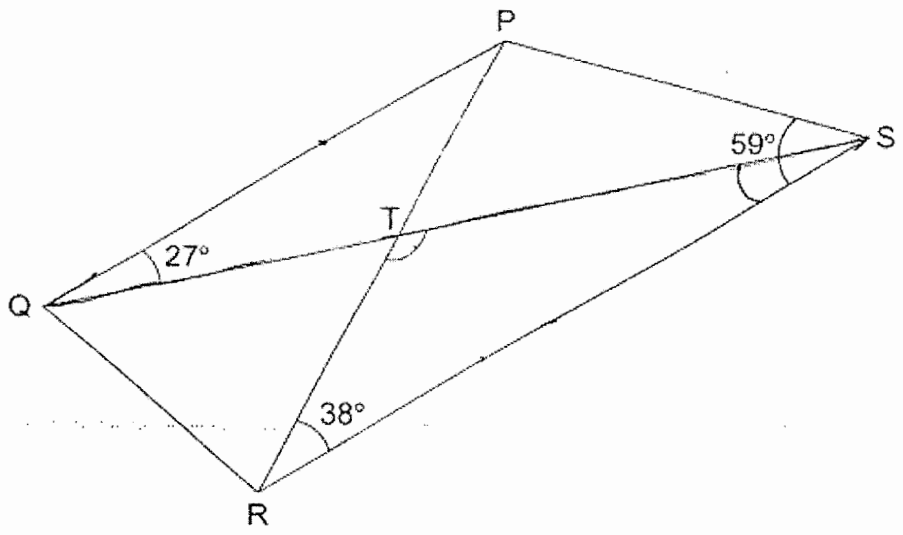

(1) 104°

(2) 115°

(3) 121°

(4) 126°

www.sgexam.com

www.sgexam.com

15 Sandra took three tests. She scored 60 marks in the first test. Her score increased by 25% in the second test. In her third test, her score reduced by 20% from the second test. How many marks did she score in total for the three tests?

(1) 213

(2) 210

(3) 195

(4) 190

www.sgexam.com

www.sgexam.com

www.sgexam.com

www.sgexam.com

AI TONG SCHOOL

2021

PRELIMINARY EXAMINATION
PRIMARY 6

MATHEMATICS
PAPER 1
(Booklet B)

DURATION (Booklets A and B) : 1 h

DATE : 20 AUGUST 2021

INSTRUCTIONS

Do not turn over this page until you are told to do so.
Follow all instructions carefully.
Answer all questions.
Write your answer in this booklet.
The use of calculators is **NOT** allowed.

Name: _____( )

Class: Primary 6 _____ **Marks:**

Paper 1 (Booklet B)	25

www.sgexam.com

www.sgexam.com

- BLANK PAGE -

www.sgexam.com

www.sgexam.com

Paper 1
Booklet B

Questions **16** to **20** carry 1 mark each. Write your answers in the spaces provided. For questions which require units, give your answers in the units stated.

(5 marks)

Do not write in this space

16 Find the value of $45.1 \div 12.28$.

Ans: _____

17 In the square grid, line WX is drawn. Lines WX and XY are of the same length. XY is perpendicular to WX. Draw and label XY in the square grid.

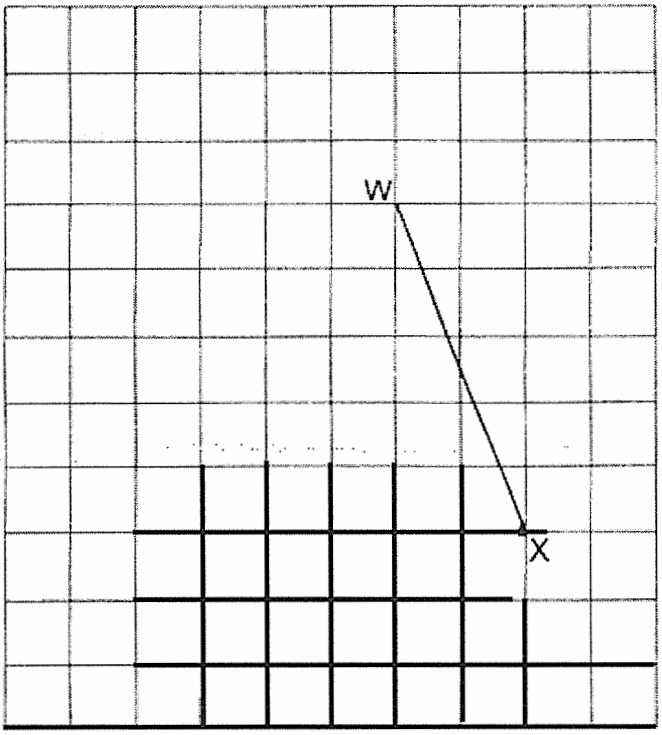

www.sgexam.com

www.sgexam.com

Do not write in this space

18 Find the value of $6 + 3y + 5 - y$ when $y = 7$.

Ans: _____

19 The figure below is made up of identical squares. Shade two more squares so that the figure has a line of symmetry.

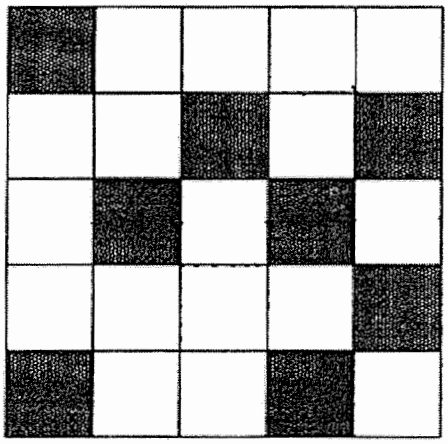

20 The figure below is made up of straight lines. QR is the base of Triangle PQR. Name the height of Triangle PQR.

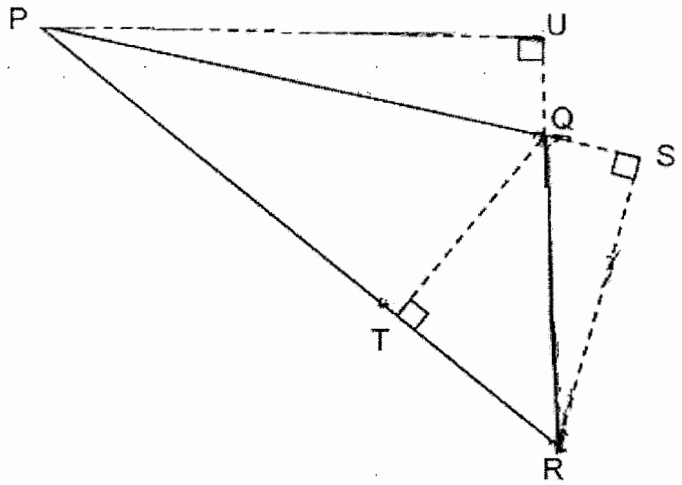

Ans: _____

www.sgexam.com

www.sgexam.com

Questions **21** to **30** carry 2 marks each. Show your working clearly and write your answers in the spaces provided. For questions which require units, give your answers in the units stated. (20 marks)

Do not write in this space

21 The table shows the cost of renting a bicycle.

Bicycles For Rent	
First hour	\$7
Every additional $\frac{1}{2}$ hour	\$4

Joseph has \$20. What is the longest duration he can rent the bicycle for?

Ans: _____ h

22 In the figure, ABC and ADE are triangles. Find $\angle p$.

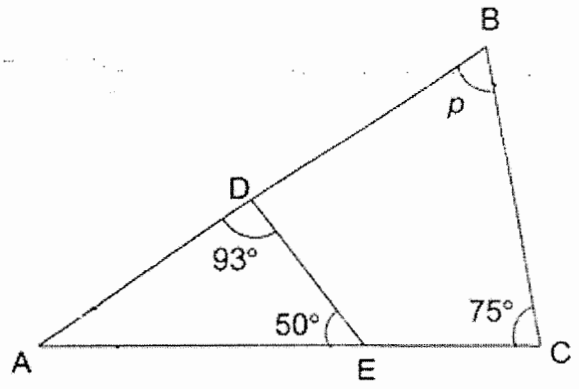

Ans: _____

www.sgexam.com

www.sgexam.com

Do not write in this space

23 The bar graph shows the number of coins Jimmy saved.

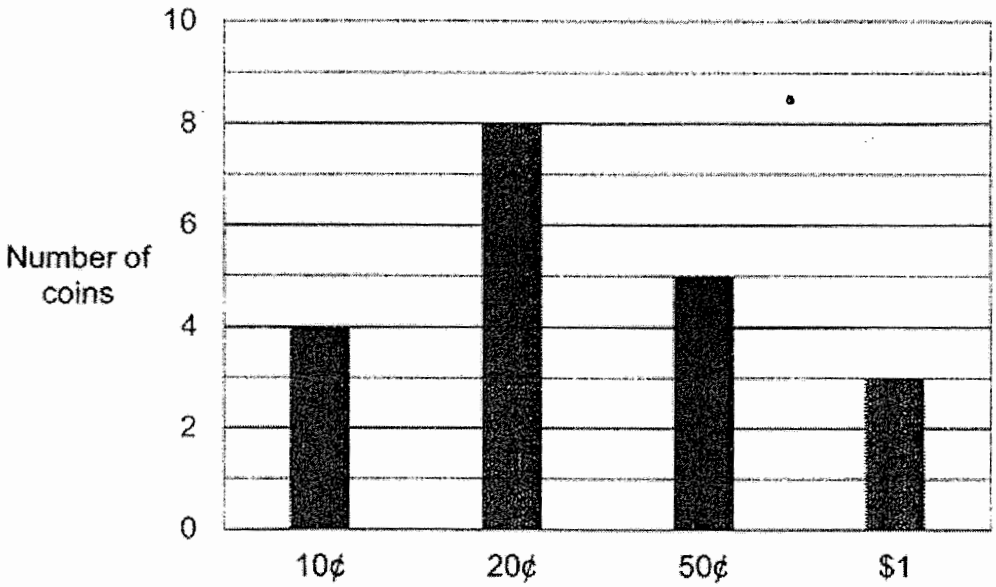

(a) How many coins did Jimmy save?

(b) What fraction of the coins were 50¢ coins?

Ans: (a)_____

(b)_____

24 The average of 5 consecutive odd numbers is 27.
What is the smallest number?

Ans: _____

www.sgexam.com

www.sgexam.com

Do not write in this space

25 The solid below is made up of 11 unit cubes.

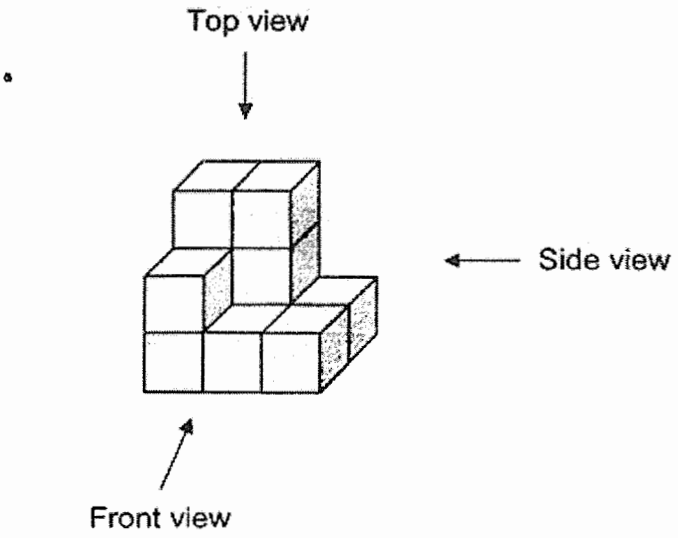

Draw the top view and side view of the solid on the grids below.

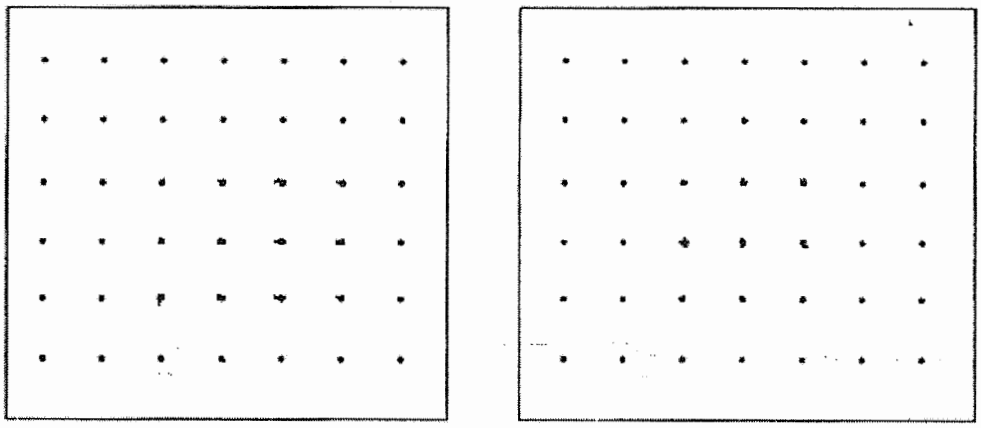

Top View

Side View

www.sgexam.com

www.sgexam.com

Do not write in this space

26 A rectangular piece of paper ABCD is pasted on a rectangular cardboard WXYZ, leaving a border of width r cm around it. AB = 12 cm and AD = 8 cm. The perimeter of the cardboard WXYZ is 64 cm. Find the value of r.

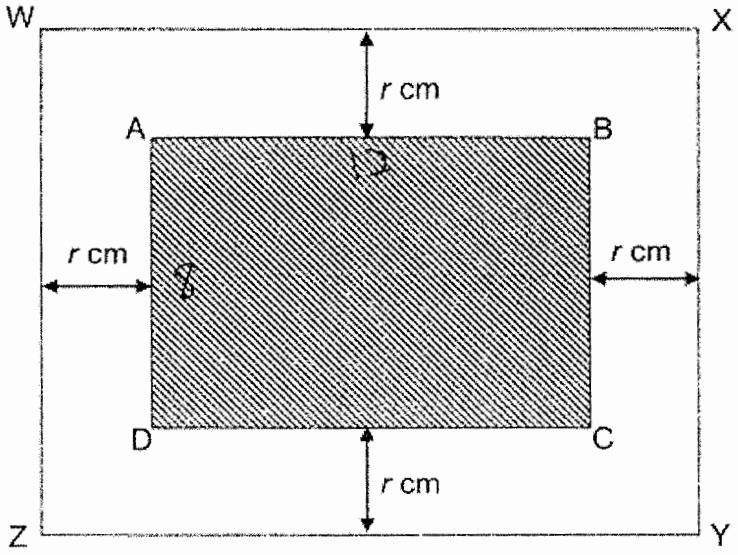

Ans: _____

27 The figure is made up of four squares A, B, C and D. Find the ratio of the area of Square A to the total area of the figure. Express your answer in the simplest form.

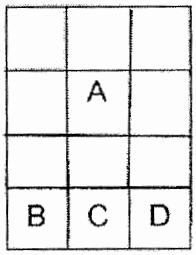

Ans: _____

www.sgexam.com

www.sgexam.com

Do not write in this space

28 In the figure below, ABDE is a square. ABC, BCD, DEF and AEF are triangles. Line FGC is a straight line parallel to line AB.

The length of GD is $\frac{2}{5}$ the length of BD.

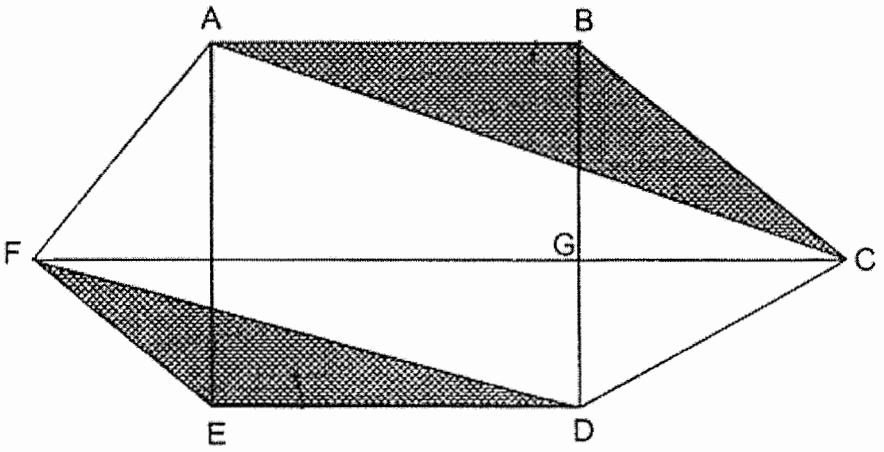

Each statement below is either true, false or not possible to tell from the information given. For each statement, put a tick (✓) in the correct column.

	Statement	True	False	Not Possible To Tell
(a)	The total area of the shaded triangles ABC and DEF is equal to the area of square ABDE.			
(b)	The ratio of the area of Triangle DEF to the area of Triangle ABC is 2 : 3.			

www.sgexam.com

www.sgexam.com

Do not write in this space

29 A group of students participated in a paper crane folding competition. The table below shows the number of paper cranes each student folded in the first round of the competition.

Number of paper cranes folded	1	2	3	4	5	6
Number of students	4	5	11	9	7	2

(a) How many students folded more than 3 paper cranes?

(b) Students who did not fold enough paper cranes in the first round could not participate in the second round. 9 students could not participate in the second round. What was the least number of paper cranes a student had to fold in order to participate in the second round?

Ans: (a)_____

(b)_____

30 The first 15 numbers of a number pattern are given below. The pattern has 633 numbers. How many "0" are there in the pattern?

5, 4, 0, 0, 2, 5, 4, 0, 0, 2, 5, 4, 0, 0, 2, ...

1st 15th

Ans: _____

End of Paper 1

www.sgexam.com

www.sgexam.com

AI TONG SCHOOL

2021

PRELIMINARY EXAMINATION
PRIMARY 6

MATHEMATICS
PAPER 2

DURATION : 1 h 30 min

DATE : 20 AUGUST 2021

INSTRUCTIONS

Do not turn over this page until you are told to do so.
Follow all instructions carefully.
Answer all questions.
Write your answers in this booklet.
The use of an approved calculator is allowed.

Name: _____( )

Class: Primary 6 _____

Marks :

Paper 1	45
Paper 2	55
Total	100

Parent's Signature : _____

Date : _____

www.sgexam.com

www.sgexam.com

- BLANK PAGE -

www.sgexam.com

www.sgexam.com

Questions **1** to **5** carry 2 marks each. Show your working clearly and write your answers in the spaces provided. For questions which require units, give your answers in the units stated. (10 marks)

Do not write in this space

1 The bar graph below represents the amount of flour Mrs Tang used from Monday to Thursday.

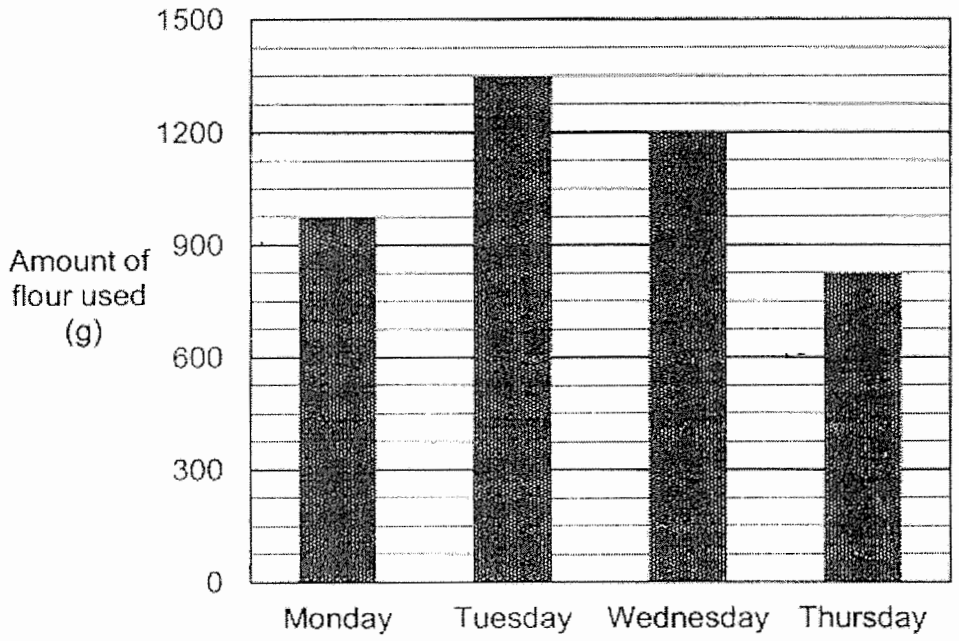

What is the average amount of flour Mrs Tang used per day?

Ans: _____ g

www.sgexam.com

www.sgexam.com

Do not write in this space

2 James filled half a rectangular tank measuring 3.2 m by 1.5 m by 2.86 m with water. Find the volume of water in the tank.
Give your answer correct to the nearest cubic metre.

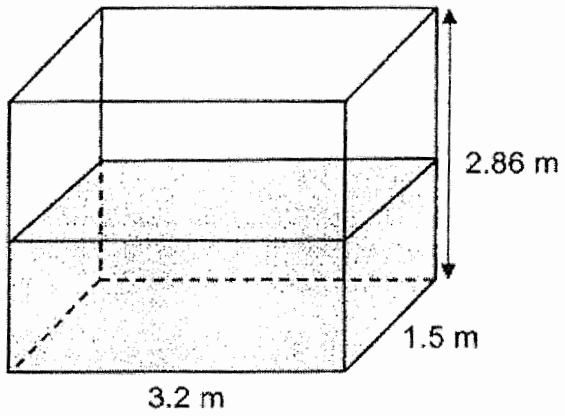

Ans: _____ m^3

3 In the figure, XY is a straight line.
Find the sum of $\angle a$, $\angle b$, $\angle c$, $\angle d$ and $\angle e$.

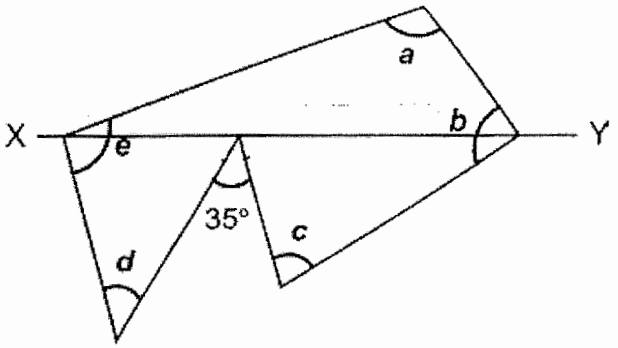

Ans: _____ °

www.sgexam.com

www.sgexam.com

Do not write in this space

4 In the figure below, PQRS and QUTS are rectangles.
PQ = 30 cm, PS = 40 cm and QS = 50 cm.
Find the length of ST.

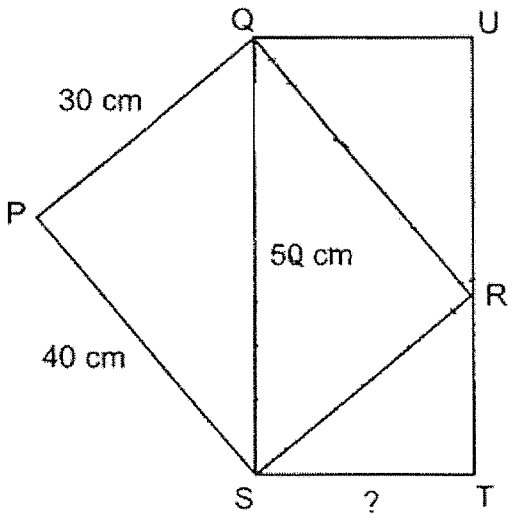

Ans: _____cm

www.sgexam.com

www.sgexam.com

Do not write in this space

5 The figure shows an equilateral triangle, P.

By joining dots on the grid with straight lines, draw a rhombus with the same perimeter as P.

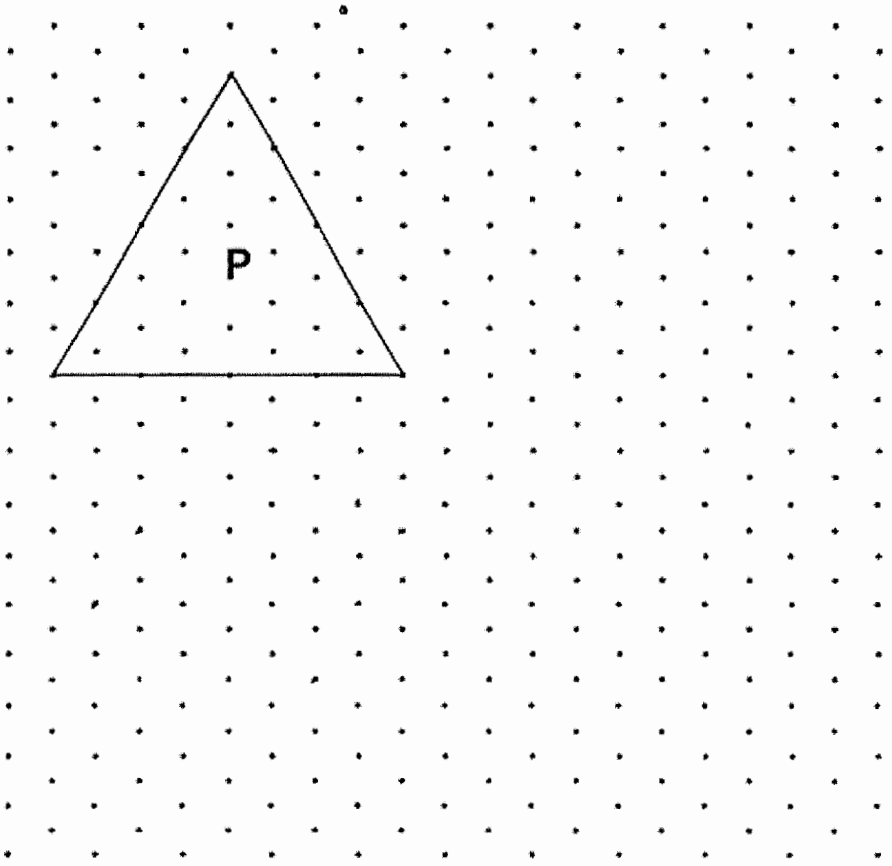

www.sgexam.com

www.sgexam.com

For questions **6** to **17**, show your working clearly and write your answers in the spaces provided. The number of marks available is shown in bracket [ ] at the end of each question or part-question. For questions which require units, give your answers in the units stated. (45 marks)

Do not write in this space

6 Kumar receives the same amount of pocket money from his father every month from March to July. He spent some of his pocket money and saved the rest. The line graph below shows the amount of pocket money Kumar spent from March to July.

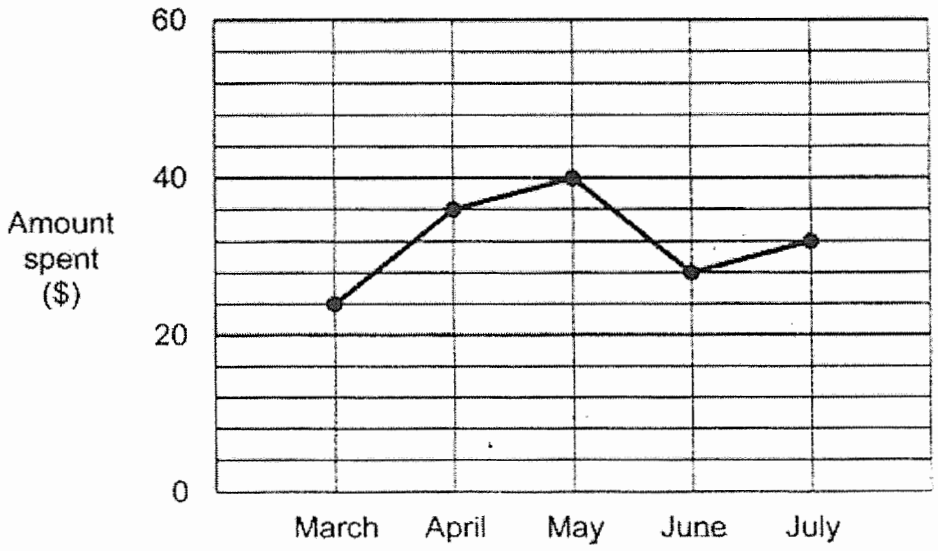

(a) Kumar saved $14 in April. How much pocket money does he receive from his father each month?

(b) What is the percentage increase in the amount of money Kumar saved from May to June?

Ans: (a) _____ [1]

(b) _____ [2]

www.sgexam.com

www.sgexam.com

Do not write in this space

7 The figure is made up of two quarter circles and a rectangle overlapping one another. The radius of the larger quarter circle is the same as the length of the rectangle. The length of the rectangle is 42 m and its breadth is 21 m. Find the sum of the perimeters of the two shaded parts X and Y.

Take $\pi = \frac{22}{7}$.

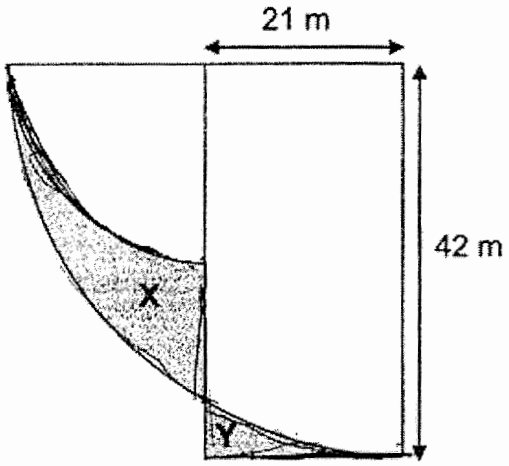

Ans: _____ [3]

www.sgexam.com

www.sgexam.com

Do not write in this space

8 In the figure below, ABCG is a rhombus. EFG and DAF are triangles. GE = GF. ∠EGF = 28° and ∠ABC = 114°. Find ∠CDE.

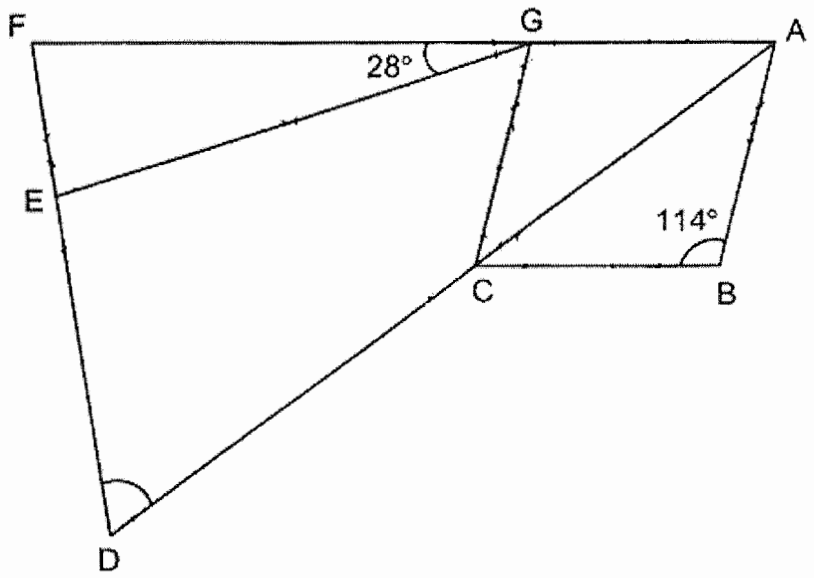

Ans: _____[3]

www.sgexam.com

www.sgexam.com

Do not write in this space

9 Bookshop A and Bookshop B sold erasers in packs of 5 and pens in packs of 8. The two bookshops sold a total of 1596 erasers and pens.
Bookshop A sold twice as many packs of erasers as pens while Bookshop B sold twice as many packs of pens as erasers.
The number of pens sold in both bookshops was the same.
How many packs of erasers did both bookshops sell altogether?

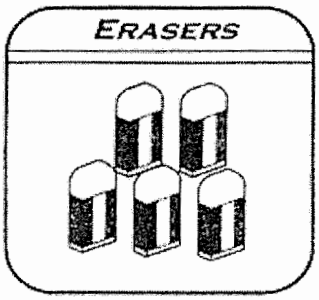

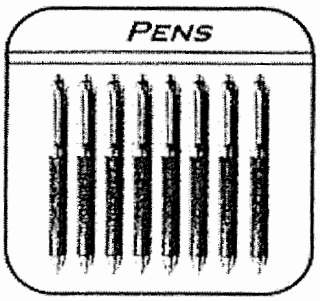

Ans: _____ [3]

www.sgexam.com

www.sgexam.com

Do not write in this space

10 Mr Tan used two different printers for a printing job. The graph below shows the number of pages printed by Printer A in a given period of time.

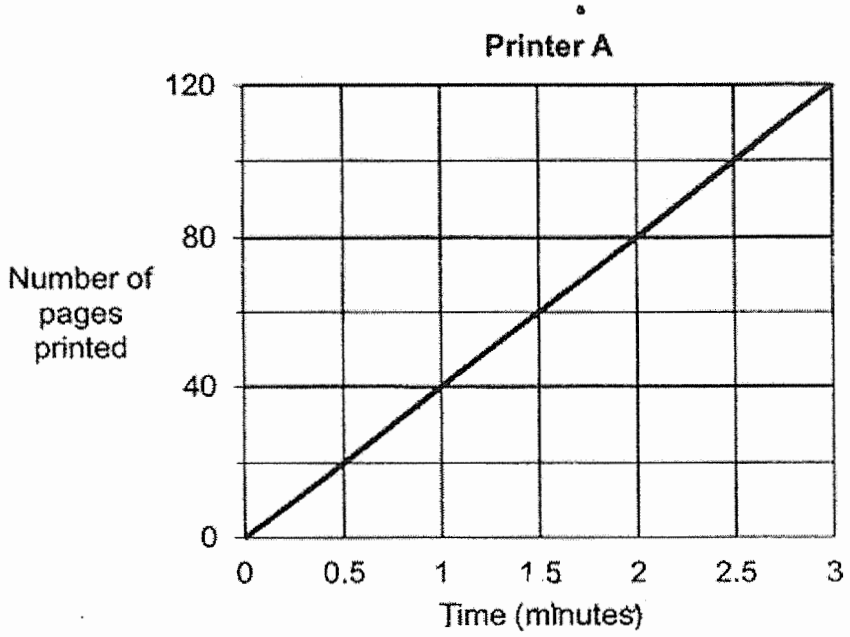

Mr Tan started printing on both printers at 10 30. He turned off Printer B at 10 45. Printer A was turned off at 10 48. He printed 1890 pages altogether. Printer B printed an equal number of pages every minute. How many pages did Printer B print in one minute?

Ans: _____ [3]

www.sgexam.com

www.sgexam.com

Do not write in this space

11 Ben earned $2.50 for delivering a small parcel and earned more for delivering a big parcel. He delivered 3 times as many small parcels as big parcels and earned a total of $156.80. He earned $53.20 less for delivering all the big parcels than all the small parcels.
How many big parcels did Ben deliver?

Ans: _____ [3]

www.sgexam.com

www.sgexam.com

Do not write in this space

12 Mrs Tan bought $\frac{4}{5}$ as many pears as apples and $\frac{2}{5}$ as many oranges as apples. She paid a total of \$150 for all the fruits. The ratio of the amount of money she spent on the pears to the amount she spent on the apples was 2 : 3. The ratio of the amount of money she spent on the pears to the amount of money she spent on the oranges was 1 : 5. Each apple cost \$0.50. Find the total number of fruits Mrs Tan bought.

Ans: _____ [4]

www.sgexam.com

www.sgexam.com

Do not write in this space

13 Figure 1 shows two identical large semicircles and two identical small semicircles overlapping within a square tile. The length of the square tile is 40 cm. The diameter of the small semicircle is 20 cm.

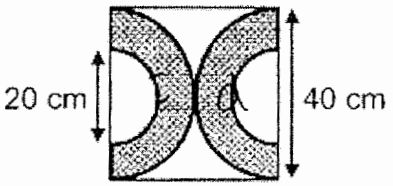

Figure 1

(a) What is the area of the shaded parts within each tile?

(b) Figure 2 shows part of a path completely covered with such tiles. The path is 48 m long and 40 cm wide. Find the area of the **unshaded path.**

Take $\pi = 3.14$.

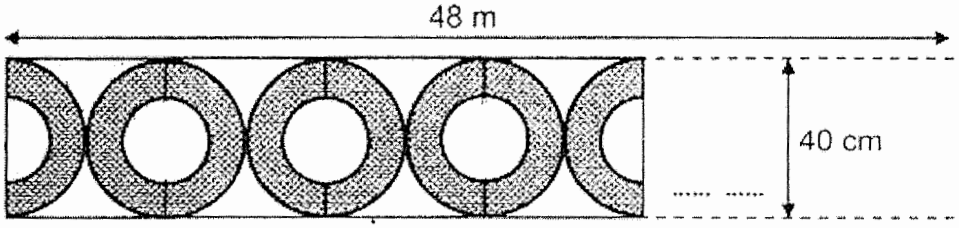

Figure 2

Ans: (a) _____ [1]

(b) _____ [3]

www.sgexam.com

www.sgexam.com

Do not write in this space

14 Jane folded two corners of a triangular piece of paper as shown in the figure below.

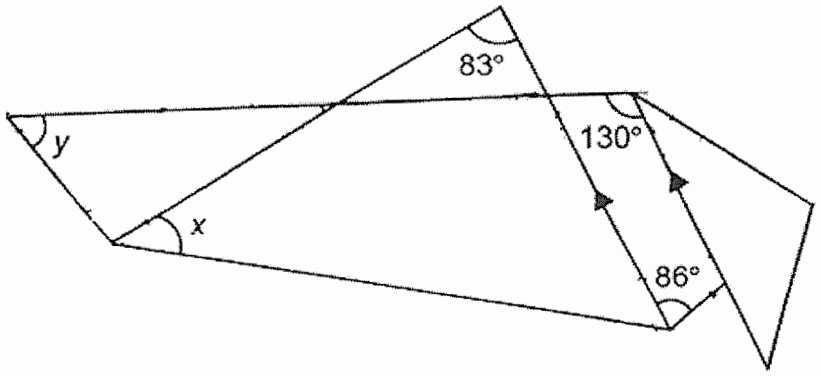

(a) Find $\angle x$.

(b) Find $\angle y$.

Ans: (a) _____ [2]

(b) _____ [3]

www.sgexam.com

www.sgexam.com

Do not write in this space

15 At a paint shop, there were some identical pails. 60% of the pails were completely filled with paint. 32% of the pails were $\frac{1}{3}$ filled with paint. The remaining 20 pails were empty. The total amount of paint in the pails was 1590 ℓ.

(a) How many pails were completely filled with paint?

(b) What was the amount of paint in one full pail?

Ans: (a) _____ [2]

(b) _____ [2]

www.sgexam.com

www.sgexam.com

Do not write in this space

16 Roger took part in a shooting game. He had to collect points by shooting gold and silver stars. He scored 8 points for each gold star shot and 3 points for each silver star shot.
At the end of the game, he scored 730 points less from shooting silver stars than gold stars. Roger shot 35 fewer silver stars than gold stars.
How many stars did Roger shoot altogether?

1 Gold	1 Silver
☆	☆
8 points	3 points

Ans: _____ [5]

www.sgexam.com

www.sgexam.com

Do not write in this space

17 Ken had 2 boxes of beads. Box A had 60 more beads than Box B at first. Ken then moved $\frac{1}{4}$ of the beads from Box A to Box B.

Next, he moved $\frac{2}{5}$ of the beads from Box B back into Box A.

Ken then added another 87 beads to Box A. In the end, the number of beads in Box A was twice the number it contained at first.

(a) How many beads from Box B were moved back into Box A?

(b) How many beads were there in Box A in the end?

Ans: (a) _____ [3]

(b) _____ [2]

END OF PAPER
CHECK YOUR WORK CAREFULLY !

www.sgexam.com

www.sgexam.com

SCHOOL : AITONG PRIMARY SCHOOL
LEVEL : PRIMARY 6
SUBJECT : MATH
TERM : 2020 PRELIM

PAPER 1 BOOKLET A

Q 1	Q2	Q3	Q4	Q5	Q6	Q7	Q8	Q9	Q10
4	4	3	4	2	2	1	1	2	1

Q 11	Q12	Q13	Q14	Q15
1	2	4	2	3

PAPER 1 BOOKLET B

Q16) 32.82

Q17)

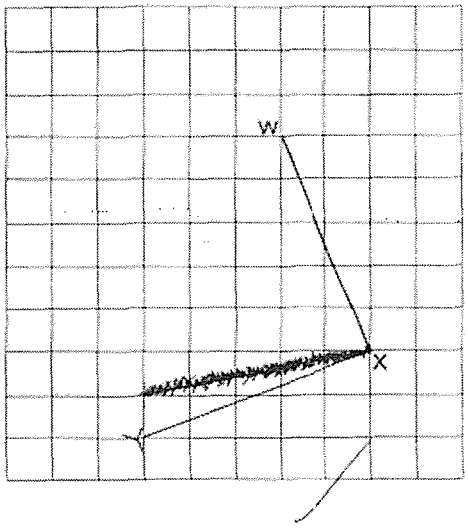

Q18) **6 + 3y + 5 – y**

= 6 + 21 + 5 – 7

= 27 + 5 – 7

= 32 – 7

= 25

www.sgexam.com

www.sgexam.com

Q19)

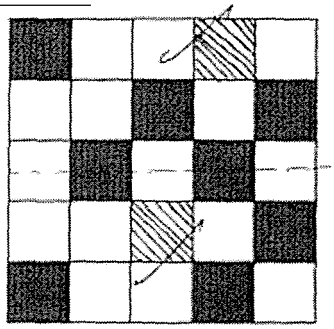

Q20) **PU**

Q21) **2.5h**

Q22) **180° – 93° – 50° – 50°**
= 130° – 93°
= 37°

Q23) **a)20**
b) ¼

Q24) **23**

Q25)

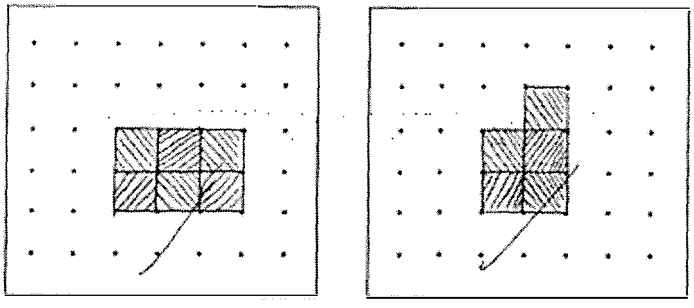

Top View Side View

Q26) **3**

Q27) **3 : 4**

Q28) **a)False**
b)True

www.sgexam.com

www.sgexam.com

Q29)	**a) 18** **b)3**
Q30)	**253**

www.sgexam.com

www.sgexam.com

Questions 1 to 5 carry 2 marks each. Show your working clearly and write your answers in the spaces provided. For questions which require units, give your answers in the units stated. (10 marks)

Do not write in this space

1 The bar graph below represents the amount of flour Mrs Tang used from Monday to Thursday.

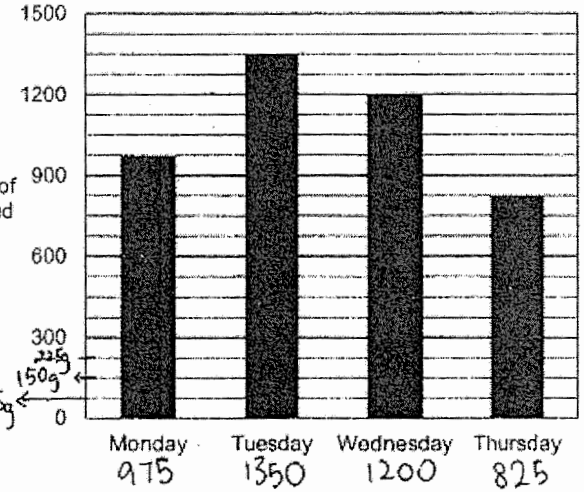

+ gaps = 300 g
gap = 300 ÷ 4
= 75
225 g
150 g
75 g

What is the average amount of flour Mrs Tang used per day?

Total = 975 + 1350 + 1200 + 825
= 4350
Ave = 4350 ÷ 4
= 1087.5

Ans: 1087.5 g

Do not write in this space

2 James filled half a rectangular tank measuring 3.2 m by 1.5 m by 2.86 m with water. Find the volume of water in the tank.
Give your answer correct to the nearest cubic metre.

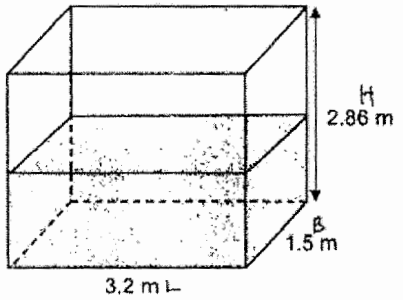

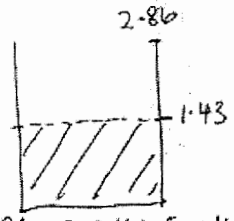

BA = 3.2 × 1.5 = 4.8

Vol = BA × H
= 4.8 × 1.43
= 6.864
≈ 7

Ans: 7 m³

3 In the figure, XY is a straight line.
Find the sum of ∠a, ∠b, ∠c, ∠d and ∠e.

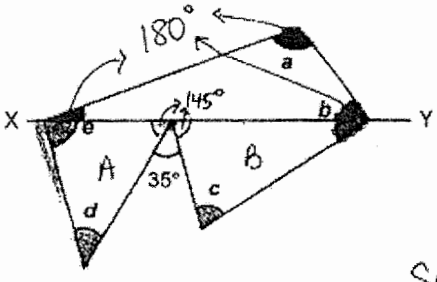

180° − 35°
= 145°

ΔA + ΔB
= 180° + 180°
= 360°
= 360° − 145°
= 215°
Sum = 180° + 215°
= 395°

Ans: 395 °

www.sgexam.com

www.sgexam.com

Do not write in this space

4 In the figure below, PQRS and QUTS are rectangles.
PQ = 30 cm, PS = 40 cm and QS = 50 cm.
Find the length of ST.

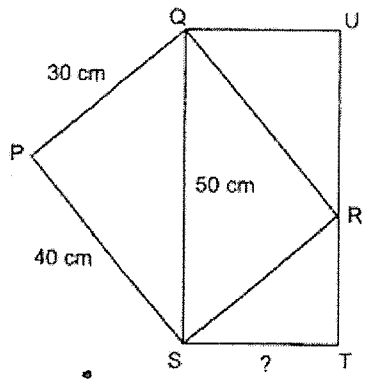

* Note
Area
ΔQUT + ΔSRT
= ΔQRS

ΔQRS = (30 × 40) ÷ 2
= 600

Rect QUTS = 600 × 2
= 1200

ST = 1200 ÷ 50
= 24

Ans: 24 cm

Do not write in this space

5 The figure shows an equilateral triangle, P.

By joining dots on the grid with straight lines, draw a rhombus with the same perimeter as P.

All equal sides *

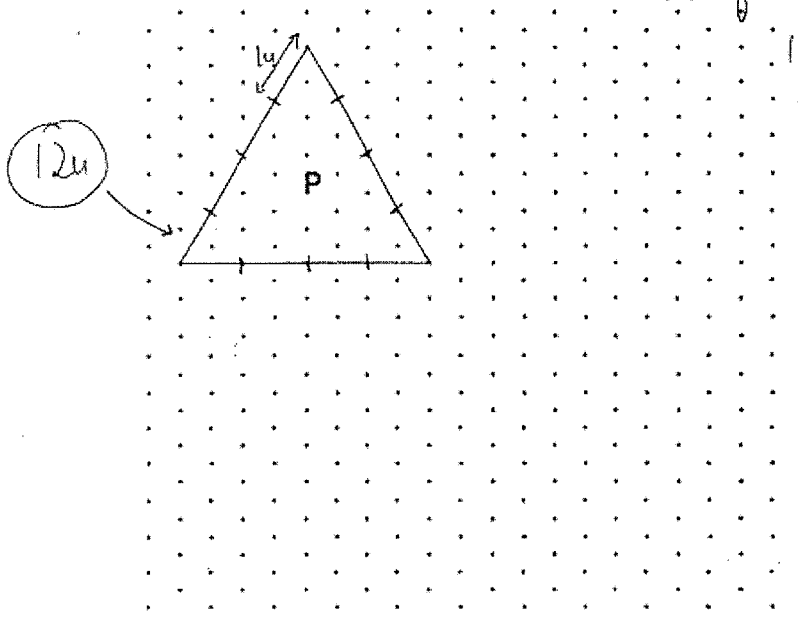

12u ÷ 4
= 3u

www.sgexam.com

www.sgexam.com

For questions 6 to 17, show your working clearly and write your answers in the spaces provided. The number of marks available is shown in bracket [ ] at the end of each question or part-question. For questions which require units, give your answers in the units stated. (45 marks)

Do not write in this space

6 Kumar receives the same amount of pocket money from his father every month from March to July. He spent some of his pocket money and saved the rest. The line graph below shows the amount of pocket money Kumar spent from March to July.

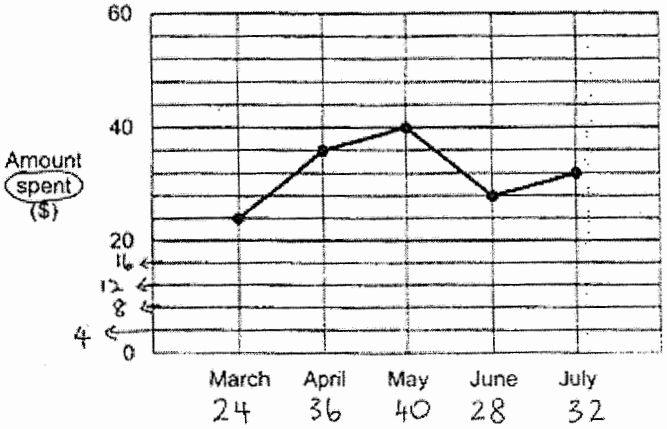

(a) Kumar saved $14 in April. How much pocket money does he receive from his father each month?

(b) What is the percentage increase in the amount of money Kumar saved from May to June?

Saved + Spent = Pocket $

14 + 36 = 50 (a)

May (100%)

Saved = 50 - 40

= 10

June

Saved = 50 - 28

= 22

↑ 22 - 10

= 12

Ans: (a) $50 [1]

(b) 120% [2]

% ↑ = $\frac{12}{10} \times \frac{100}{1}$ = 120 (b)

5

7 The figure is made up of two quarter circles and a rectangle overlapping one another. The radius of the larger quarter circle is the same as the length of the rectangle. The length of the rectangle is 42 m and its breadth is 21 m. Find the sum of the perimeters of the two shaded parts X and Y.

HL → L → Add ✓

Take $\pi = \frac{22}{7}$.

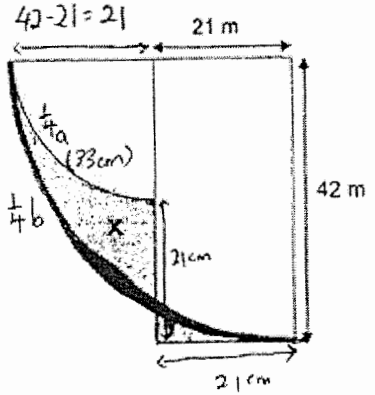

$\frac{1}{4}$ a (D = 21 × 2 = 42)

$\frac{1}{4} \times \pi \times D$

$= \frac{1}{4} \times \frac{22}{7} \times \frac{42}{1}$

= 33

$\frac{1}{4}$ b

D = 42 × 2 = 84

$\frac{1}{4} \times \pi \times D$

$= \frac{1}{4} \times \frac{22}{7} \times \frac{84}{1}$

= 66

P = 33 + 66 + 21 + 21

= 141

Ans: 141 m [3]

6

2021 P6 Prelim Math Paper 2

www.sgexam.com

www.sgexam.com

8 In the figure below, ABCG is a rhombus. EFG and DAF are triangles. GE = GF. ∠EGF = 28° and ∠ABC = 114°. Find ∠CDE.

Do not write in this space

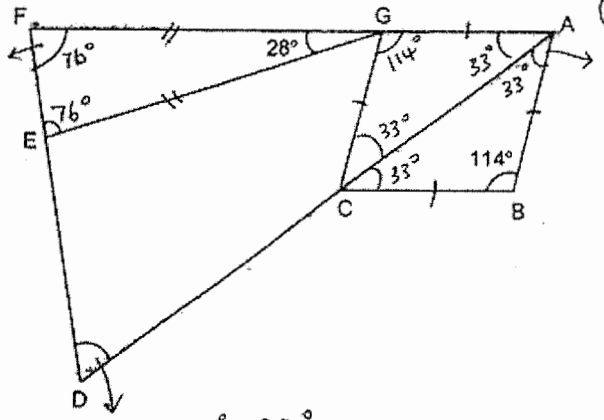

180° - 28° = 152°
152° ÷ 2 = 76°

① 180 - 114 = 66
66 ÷ 2 = 33

180° - 76° - 33°
= 71°

Ans: 71° [3]

9 Bookshop A and Bookshop B sold erasers in packs of 5 and pens in packs of 8. The two bookshops sold a total of 1596 erasers and pens. Bookshop A sold twice as many packs of erasers as pens while Bookshop B sold twice as many packs of pens as erasers. The number of pens sold in both bookshops was the same. How many packs of erasers did both bookshops sell altogether?

Do not write in this space

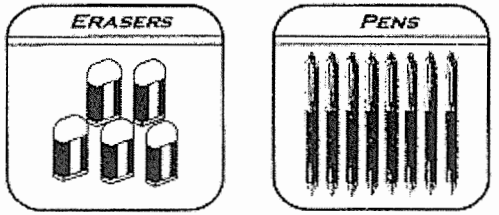

SHOP A

	E	P
Qty	2u	1u
Unit Value	5	8
Total Value	10u	8u
	×2	×2
	⇓	⇓
	20p	16p

SHOP B

	E	P
Qty	1p	2p
Unit Value	5	8
Total Value	5p	16p

Same.

20p + 16p + 5p + 16p = 57p
57p = 1596
1p = 1596 ÷ 57 = 28
20p + 5p
25p = 28 × 25 = 700 (erasers)
Packs = 700 ÷ 5 = 140

Ans: 140 [3]

www.sgexam.com

www.sgexam.com

Do not write in this space

10 Mr Tan used two different printers for a printing job. The graph below shows the number of pages printed by Printer A in a given period of time.

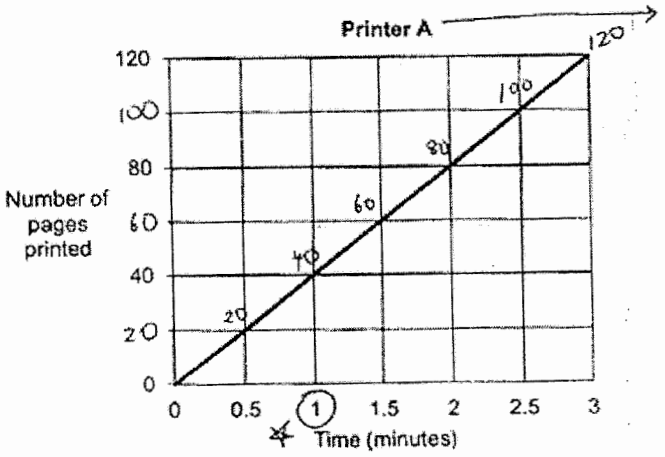

1min ⇓ 40 pages

Mr Tan started printing on both printers at 10 30. He turned off Printer B at 10 45. Printer A was turned off at 10 48. He printed 1890 pages altogether. Printer B printed an equal number of pages every minute. How many pages did Printer B print in one minute?

Printer A
1 min = 40
18 min = 40 × 18 = 720

1030 1045 1048

Printer B
15 min = 1890 − 720
= 1170
1 min = 1170 ÷ 15
= 78

Total 1890 pages

Ans: 78 [3]

Do not write in this space

11 Ben earned $2.50 for delivering a small parcel and earned more for delivering a big parcel. He delivered 3 times as many small parcels as big parcels and earned a total of $156.80. He earned $53.20 less for delivering all the big parcels than all the small parcels. How many big parcels did Ben deliver?

unit Value. big Qty Value model

Total Value

Big	1u	
Small	1u	$53.20

$156.80

2u = 156.80 − 53.20
= 103.60
1u = 103.60 ÷ 2 = 51.80 (BIG)
Small = 51.80 + 53.20 = 105

	Small	Big
Qty	3u	1u
Unit	2.50	2.50 + 1p
Total	7.50u	2.50u + 1up

7.50u = $105
1u = 105 ÷ 7.50
= 14

Ans: 14 [3]

www.sgexam.com

www.sgexam.com

Do not write in this space

12 Mrs Tan bought $\frac{4}{5}$ as many pears as apples and $\frac{2}{5}$ as many oranges as apples. She paid a total of $150 for all the fruits. The ratio of the amount of money she spent on the pears to the amount she spent on the apples was 2 : 3. The ratio of the amount of money she spent on the pears to the amount of money she spent on the oranges was 1 : 5. Each apple cost $0.50. Find the total number of fruits Mrs Tan bought.

Qty

P : A : O

4 : 5

5 : 2

4 : 5 : 2

Value

P : A : O

2 : 3

1×2 : 5×2

2 : 3 : 10

	P	A	O	Total
Qty	4u	5u	2u	11u
Unit Value		50¢		
Total Value	2p	(250u) 3p	10p	$150

3000¢

15p = $150

1p = $150 ÷ 15 = $10

3p = $10 × 3 = $30

(Apples)

$30 = 3000¢

1.

250u = 3000¢

1u = 3000 ÷ 250

= 12

11u = 12 × 11 = 132

Ans: 132 [4]

Do not write in this space

13 Figure 1 shows two identical large semicircles and two identical small semicircles overlapping within a square tile. The length of the square tile is 40 cm. The diameter of the small semicircle is 20 cm.

BIG

D = 40 R = 20

π × R × R

= 3.14 × 20 × 20

= 1256

Small D = 20 R = 10

3.14 × 10 × 10 = 314

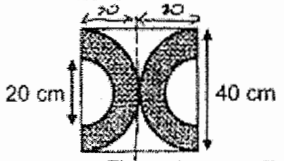

Figure 1

PLAN: BIG circle − Small circle

Shaded = 1256 − 314

= 942 (a)

(a) What is the area of the shaded parts within each tile?

(b) Figure 2 shows part of a path completely covered with such tiles. The path is 48 m long and 40 cm wide. Find the area of the unshaded path.

Take π = 3.14.

×100

48 m = 4800 cm.

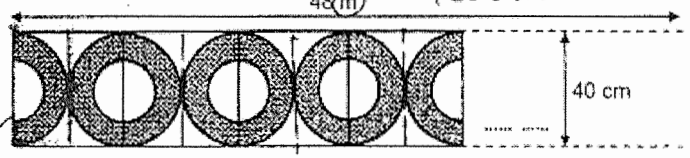

20cm

Figure 2

shaded = 942 cm² ÷ 2 = 471 cm²

Rect = 20 × 40

= 800

Unshaded = 800 − 471 = 329

} 1 RECT

20 cm = 1 Rect

4800 cm = 4800 ÷ 20

= 240 (Rect)

240 × 329 = 78960

Ans: (a) 942 cm² [1]

(b) 78960 cm² [3]

www.sgexam.com

www.sgexam.com

14 Jane folded two corners of a triangular piece of paper as shown in the figure below.

Do not write in this space

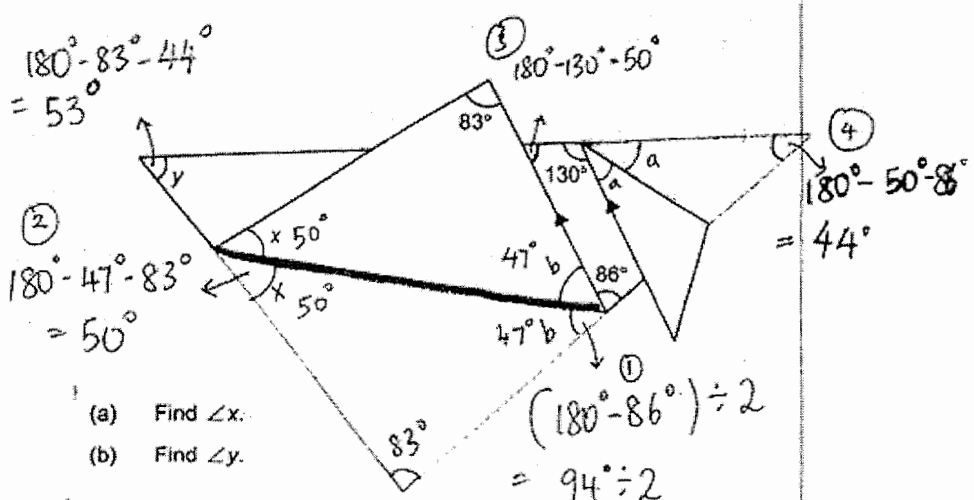

(a) Find ∠x.

(b) Find ∠y.

Ans: (a) 50° [2]

(b) 53° [3]

15 At a paint shop, there were some identical pails. 60% of the pails were completely filled with paint. 32% of the pails were $\frac{1}{3}$ filled with paint. The remaining 20 pails were empty. The total amount of paint in the pails was 1590 ℓ.

Do not write in this space

(a) How many pails were completely filled with paint?

(b) What was the amount of paint in one full pail?

	Complete (150 pails)	$\frac{1}{3}$ filled	Empty
Qty (P)	60 u	32 u	8 u → 20 pails
Unit Value	3p	1p	0
Total Value	180up	52up	0

1590 ℓ

8 u = 20

1 u = $\frac{20}{8}$

60 u = $\frac{20}{8} \times \frac{60}{1}$ = 150 (a)

180up + 32up = 212up

212up = 1590

1up = 1590 ÷ 212

= 7.5

180up = 7.5 × 180 = 1350

150 pails = 1350 ℓ

1 pail = 1350 ÷ 150

= 9

Ans: (a) 150 [2]

(b) 9 ℓ [2]

www.sgexam.com

www.sgexam.com

Do not write in this space

16 Roger took part in a shooting game. He had to collect points by shooting gold and silver stars. He scored 8 points for each gold star shot and 3 points for each silver star shot.
At the end of the game, he scored 730 points less from shooting silver stars than gold stars. Roger shot 35 fewer silver stars than gold stars.
How many stars did Roger shoot altogether?

Unit value

Total value

Qty

1 Gold	1 Silver
☆	☆
8 points	3 points

	Gold	Silver	Total
Qty	1u + 35	1u	2u + 35
Unit Value (points)	8	3	= 2 × 90 + 35
Total Value (points)	8u + 280	3u	= 215 (Ans)

diff = 730

Points

G | 3u | 5u | 280 |
S | 3u |

730

5u = 730 − 280
= 450
1u = 450 ÷ 5
= 90

Ans: 215 [5]

Do not write in this space

17 Ken had 2 boxes of beads. Box A had 60 more beads than Box B at first. Ken then moved $\frac{1}{4}$ of the beads from Box A to Box B.

Next, he moved $\frac{2}{5}$ of the beads from Box B back into Box A.

Ken then added another 87 beads to Box A. In the end, the number of beads in Box A was twice the number it contained at first.

(a) How many beads from Box B were moved back into Box A?

(b) How many beads were there in Box A in the end?

4u + 60 ×2 → 8u + 120

A	B
1u + 60	1u
4u + 60 − 1u − 15	4u + 1u + 15
3u + 45 + 2u + 6	5u + 15 − 2u − 6
5u + 51 + 87	3u + 9
5u + 138	3u + 9

5u + 138 = 8u + 120
−5u −120 −5u −120
18 = 3u
1u = 6

2u + 6 = 2 × 6 + 6
= 18 (a)

5u + 138 = (5 × 6) + 138
= 168

Ans: (a) 18 [3]

(b) 168 [2]

END OF PAPER
CHECK YOUR WORK CAREFULLY !

www.sgexam.com

www.sgexam.com

www.sgexam.com