NATIONAL	7-P-50	6-3/4*7-3/4

	LINERS		LINER GASKETS		PISTONS		PISTON REPLACEMENT RUBBERS	
SIZE	SUPREME	CERAMIC	RUBBER	URETHANE	SUPREME	WHITE LIGHTNING	SUPREME	WHITE LIGHTNING
4"	LC05466040	LC07466040	LC07923272		LC012180170		LC015180102	
4-1/4"								
4-1/2"	LC05466045	LC07466045	LC07923274		LC012180196	LC012180197	LC015180144	LC015180145
4-3/4"								
5"	LC05466050	LC07466050	LC07923266		LC012180253	LC012180254	LC015180185	LC015180186
5-1/4"								
5-1/2"	LC05466055	LC07466055	LC07923278		LC012180337	LC012180338	LC015180227	LC015180228
5-3/4"								
6"	LC05466060	LC07466060	LC07923280		LC012180394	LC012180395	LC015180268	LC015180269
6-1/4"	LC05466062				LC012180493	LC012180494	LC015180284	LC015180285
6-1/2"					LC012180535	LC012180536	LC015180300	LC015180301
6-3/4"								
7"								
7-1/4"								
7-1/2"								
7-3/4"								
8"								

GASKETS		OEM	OEM URETHANE	L STYLE	L STYLE URETHANE
	VALVE COVER	LC1540139	LC1540128		
	WEAR PLATE				

DESCRIPTION	SUPREME	ROUGHNECK	ROUGHNECK HP	FKN	
VALVE (White Insert)					
VALVE (Urethane Insert)	LC060152907			LC1561525	
VALVE (Rubber)	LC060122801			LC1561524	
VALVE SEAT	LC061102729			LC1561530	
INSERT (Urethane)	LC062400080			LC1561527	
INSERT (Rubber)	LC062400072			LC1561528	
VALVE SPRING	LC055413371			LC1560701	
VALVE LOCK				LC1560706	
VALVE RING				LC1560705	
SEAT PULLER ASSEMBLY	LCM1060			LCM1060	
PULLER HEAD-SPLIT JAW				LCM1093	
PULLER HEAD	LC181240508				

Model	CROSSHEAD ROD	SELF ALIGNING ROD ASSEMBLY	PONY ROD BAFFLE	PISTON ROD	SUB ROD	PISTON ROD NUT	CLAMP ASSEMBLY	Pony Rod Seal
7-P-50	LC1294083			LC1294147	LC1294146	LC005402052	LC1294085	LC07209100

Copyright © [OLEC ETS]. All rights reserved.

NATIONAL 7-P-50			FLUID END MODULE & ACCESSORIES
ITEM #	OEM PART #	DESCRIPTION	QTY PER PUMP
1	1294150	MODULE, STUDDED FLUID END DISCHARGE (INCLUDES ITEMS 1, 3-8)	3
2	1294156	MODULE, FLUID END SUCTION	3
3	G2408041	STUD, DISCHARGE TO SUCTION MODULE	18
4	6300200	NUT, DISCHARGE TO SUCTION MODULE STUD	18
5	2408042	STUD, POWER FRAME	24
6	6300160	NUT, POWER FRAME STUD	24
7	2408043P	STUD, LINER BUSHING	18
8	6300120	NUT, LINER BUSHING STUD	18
9	1290178	SCREW, WEDGE LOCKING	6
10	G1290376	WEDGE COMPLETE, LOCKING	6
11	1290315	WASHER, LOCKING WEDGE SCREW	6
12	1292140	HOLDER, INSERT	6
13	1292141	INSERT, VALVE GUIDE	6
14	1294160	PLATE, WEAR	3
15	1294165	BUSHING, LINER	3
16	1294166	CLAMP COMPLETE, LINER	3
17	1294170	CONNECTOR, DISCHARGE	2
18	1294171	ADAPTER, CONNECTOR	2
19	1294172	COVER, VALVE	6
20	1294174	RETAINER, SEAL	6
21	1294192	SEAL, MODULE	6
22	1540142	SEAL, SUCTION MANIFOLD	3
23	2410031348	PACKING, DISCHARGE CONNECTOR	2
24	2410031427	PACKING, DISCHARGE ADAPTER	4
25	6300160	NUT, WEDGE ADJUSTING SCREW	6
26	700048110	CAPSCREW, SUCTION MANIFOLD	24
27	1540128	GASKET, VALVE COVER	6

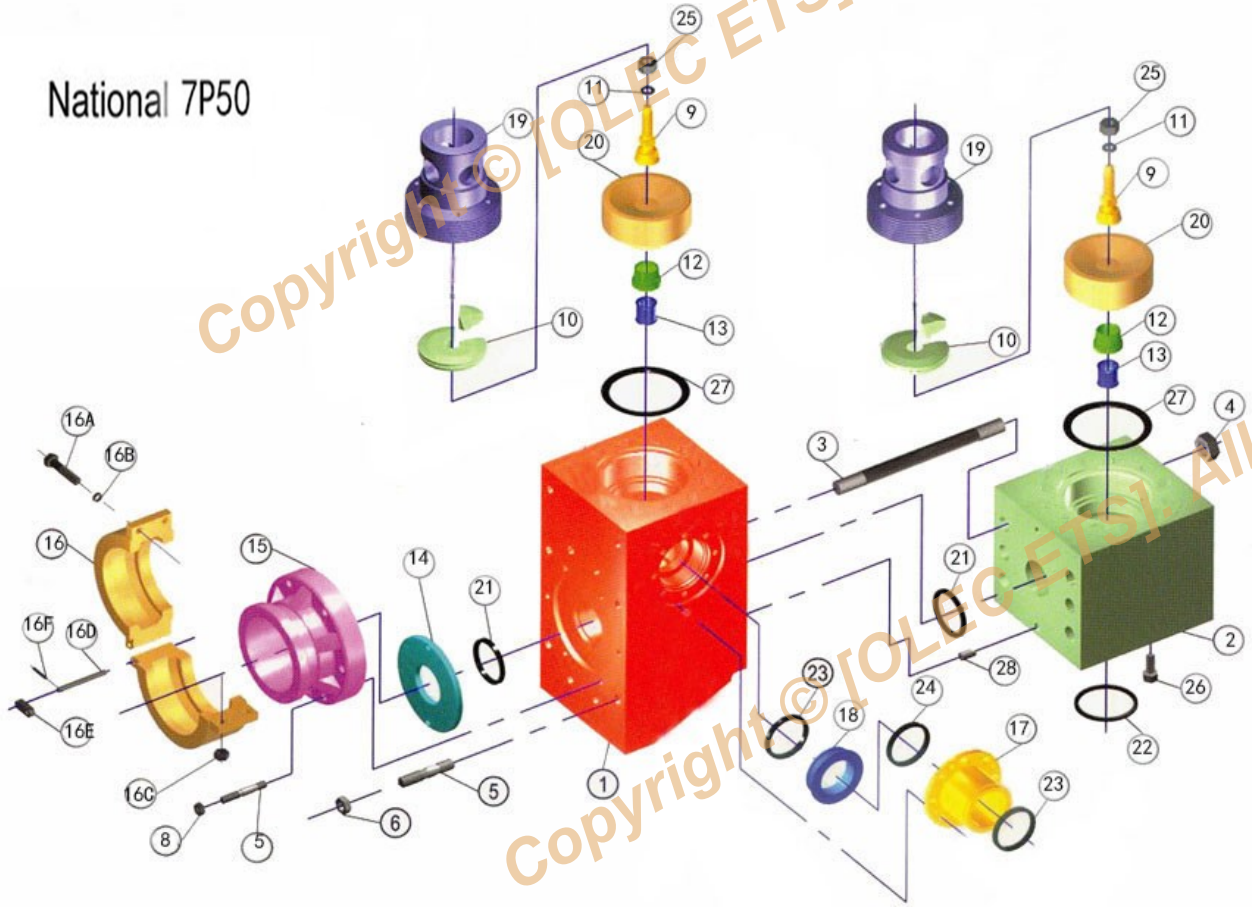

Copyright © [OLEC ETS]. All rights reserved.

NATIONAL			8-P-80				6-1/4*8-1/2	
	LINERS		LINER GASKETS		PISTONS		PISTON REPLACEMENT RUBBERS	
SIZE	SUPREME	CERAMIC	RUBBER	URETHANE	SUPREME	WHITE LIGHTNING	SUPREME	WHITE LIGHTNING
4"	LC05464400	LC07464400	LC07923272		LC012180170		LC015180102	
4-1/4"								
4-1/2"	LC05464450	LC07464450	LC07923274		LC012180196	LC012180197	LC015180144	LC015180145
4-3/4"								
5"	LC05464500	LC07464500	LC07923266		LC012180253	LC012180254	LC015180185	LC015180186
5-1/4"								
5-1/2"	LC05464550	LC07464550	LC07923278		LC012180337	LC012180338	LC015180227	LC015180228
5-3/4"								
6"	LC05464600	LC07464600	LC07923280		LC012180394	LC012180395	LC015180268	LC015180269
6-1/4"	LC05464652				LC012180493	LC012180494	LC015180284	LC015180285
6-1/2"	LC0546650H		LC20100012		LC012180535	LC012180536	LC015180300	LC015180301
6-3/4"								
7"								
7-1/4"								
7-1/2"								
7-3/4"								
8"								

GASKETS		OEM	OEM URETHANE	L STYLE	L STYLE URETHANE
	VALVE COVER	LC1540137	LC1540126		
	WEAR PLATE	LC1290344	LC07211023		

DESCRIPTION	SUPREME	ROUGHNECK	ROUGHNECK HP	FKN	
VALVE (White Insert)	LC060152809	LC9700367	LC9700359		
VALVE (Urethane Insert)	LC060152808	LC9700285	LC9700353	LC1560995	
VALVE (Rubber)	LC060122702	LC9702601		LC1560994	
VALVE SEAT	LC061102604	LC9702555	LC9702555	LC1561450	
INSERT (Urethane)	LC062400106	LC9705090	LC9700363	LC1560587	
INSERT (Rubber)	LC062400056	LC9705155		LC1560588	
VALVE SPRING	LC055413421	LC8201684	LC8201684	LC1560701	
VALVE LOCK				LC1560706	
VALVE RING				LC1560705	
SEAT PULLER ASSEMBLY	LCM1060	LCM1060	LCM1060	LCM1060	
PULLER HEAD-SPLIT JAW		LCM1093	LCM1093	LCM1089	
PULLER HEAD	LC181235052	LC8401977	LC8401977		

Model	CROSSHEAD ROD	SELF ALIGNING ROD ASSEMBLY	PONY ROD BAFFLE	PISTON ROD	SUB ROD	PISTON ROD NUT	CLAMP ASSEMBLY	Pony Rod Seal
8-P-80	LC1602594		LC1291194	LC1291277	LC1291276	LC005402052	LC1291085	LC1291182

Copyright © [OLEC ETS]. All rights reserved.

National 8P80

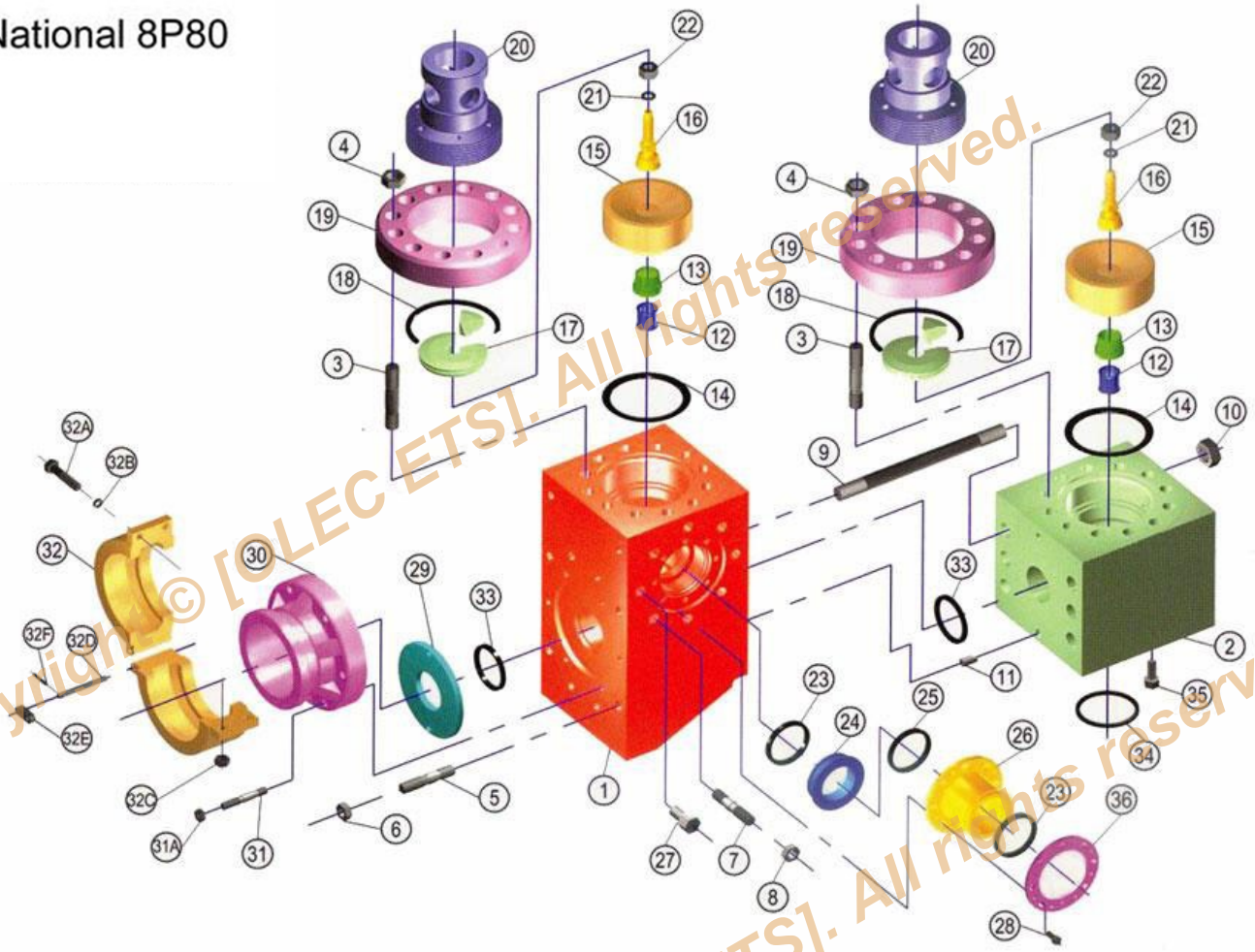

Copyright © [OLEC ETS]. All rights reserved.

National 8P80 O.E.M. Stlye Fluid End and Spares

Item No.	OEM Part No.	Description	Qty/Pump
1	1291280	Discharge Fluid End Module, Studded	3
2	1290338	Suction Fluid End Module, Studded	3
3 & 4	Assembly	Threaded Ring Stud, w/ Nut	72
3	2408019	Threaded Ring Stud	72
4	6300220	Threaded Ring Stud, Nut	72
5 & 6	Assembly	Power End Stud, w/ Nut	24
5	2408026	Power End Stud	24
6	6300180	Power End Stud, Nut	24
7	2402560	Discharge Spacer Stud	16
8	6300200	Discharge Spacer Stud, Nut	16
9 & 10	Assembly	Suction Module Stud, w/ Nut	18
9	2408034	Suction Module Stud	18
10	6300241	Suction Module Stud, Nut	18
11	6511416	Dowell Pin	6
12	1292141	Valve Guide Bushing	6
13	1292140	Valve Guide Holder	6
14	1540126	Valve Cover Gasket	6
15	1290174	Seal Retainer (includes item 12)	6
16, 17, 21 & 22	Assembly	Locking Wedge Assembly (Wilson Assembly)	6
16	1290178	Wedge Adjusting Screw	6
17	G1290376	Locking Wedge Assembly	6
18	1290181	Locking Wedge Spring	6
19	1290308	Threaded Ring	6
20	1290307	Vavle Cover Lock	6
21	1290315	Wedge Adjusting Screw, Washer	6
22	6300160	Wedge Adjusting Screw, Nut	6
23	2410031427	Discharge Adapter & Connector Packing	4
24	1290343	Discharge Adapter	2
25	2410031348	Discharge Connector Packing	2
26	1290342	Discharge Connector	2
27	7006607	Discharge Spacer Flange Capscrew (1 1/4x 3 1/4)	16
28	700030511	Discharge Connector Capscrew (1/2-13x1 1/2)	16
29	1290357	Wear Plate	3
30	1291165	Liner Bushing	3
31 & 31A	Assembly	Liner Bushing Stud w/ Nut	18
31	2408025	Liner Bushing Stud	18
31A	6300120	Liner Bushing Stud Nut	18
32	1291166	Liner Clamp	3
32A	700040311	Liner Clamp Screw	6
32B	7619050	Lock Washer	6
32C	6309100	Maclean -Fogg 22TWA5811	6
32D	1291169	Liner Clamp Pin	6
32E	1291168P	Liner Clamp Connector	6
32F	6571014	Pin Spring	12
33	1290344	Wear Plate Seal , Suction to Discharge Seal	6
34	1590051	Suction Manifold Gasket	3
35	700048210	Suction Manifold Bolt (w/ Washer)	24

Copyright © [OLEC ETS]. All rights reserved.

NATIONAL			9-P-100					6-3/4*9-1/4
	LINERS		LINER GASKETS		PISTONS		PISTON REPLACEMENT RUBBERS	
SIZE	SUPREME	CERAMIC	RUBBER	URETHANE	SUPREME	WHITE LIGHTNING	SUPREME	WHITE LIGHTNING
4"	LC05465400	LC07465400	LC07923274		LC012180170		LC015180102	
4-1/4"								
4-1/2"	LC05465450	LC07465450	LC07923274		LC012180196	LC012180197	LC015180144	LC015180145
4-3/4"								
5"	LC05465500	LC07465500	LC07923265	LC07211011	LC012180253	LC012180254	LC015180185	LC015180186
5-1/4"								
5-1/2"	LC05465550	LC07465550	LC07923263	LC07211005	LC012180337	LC012180338	LC015180227	LC015180228
5-3/4"								
6"	LC05465600*	LC07465600	LC07923261	LC07211004	LC012180394	LC012180395	LC015180268	LC015180269
6-1/4"	LC05465652*				LC012180493	LC012180494	LC015180284	LC015180285
6-1/2"	LC05465650*		LC07923283		LC012180535	LC012180536	LC015180300	LC015180301
6-3/4"	LC05465675H							
7"								
7-1/4"								
7-1/2"								
7-3/4"								
8"								

GASKETS		OEM	OEM URETHANE	L STYLE	L STYLE URETHANE
	VALVE COVER	LC1540137	LC1540126		
	WEAR PLATE	LC1290344	LC07211023		

DESCRIPTION	SUPREME	ROUGHNECK	ROUGHNECK HP	FKN	
VALVE (White Insert)	LC060152809	LC9700367	LC9700359		
VALVE (Urethane Insert)	LC060152808	LC9700285	LC9700353	LC1560995	
VALVE (Rubber)	LC060122702	LC9702601		LC1560994	
VALVE SEAT	LC061102604	LC9702555	LC9702555	LC1561450	
INSERT (Urethane)	LC062400106	LC9705090	LC9700363	LC1560587	
INSERT (Rubber)	LC062400056	LC9705155		LC1560588	
VALVE SPRING	LC055413421	LC8201684	LC8201684	LC1560701	
VALVE LOCK				LC1560706	
VALVE RING				LC1560705	
SEAT PULLER ASSEMBLY	LCM1060	LCM1060	LCM1060	LCM1060	
PULLER HEAD-SPLIT JAW		LCM1093	LCM1093	LCM1089	
PULLER HEAD	LC181235052	LC8401977	LC8401977		

Model	CROSSHEAD ROD	SELF ALIGNING ROD ASSEMBLY	PONY ROD BAFFLE	PISTON ROD	SUB ROD	PISTON ROD NUT	CLAMP ASSEMBLY	Pony Rod Seal
9-P-100	LC1681460		LC1293194	LC1293147	LC1293146	LC005402052	LC1293085	LC1293182

Copyright © [OLEC ETS]. All rights reserved.

National 9P100

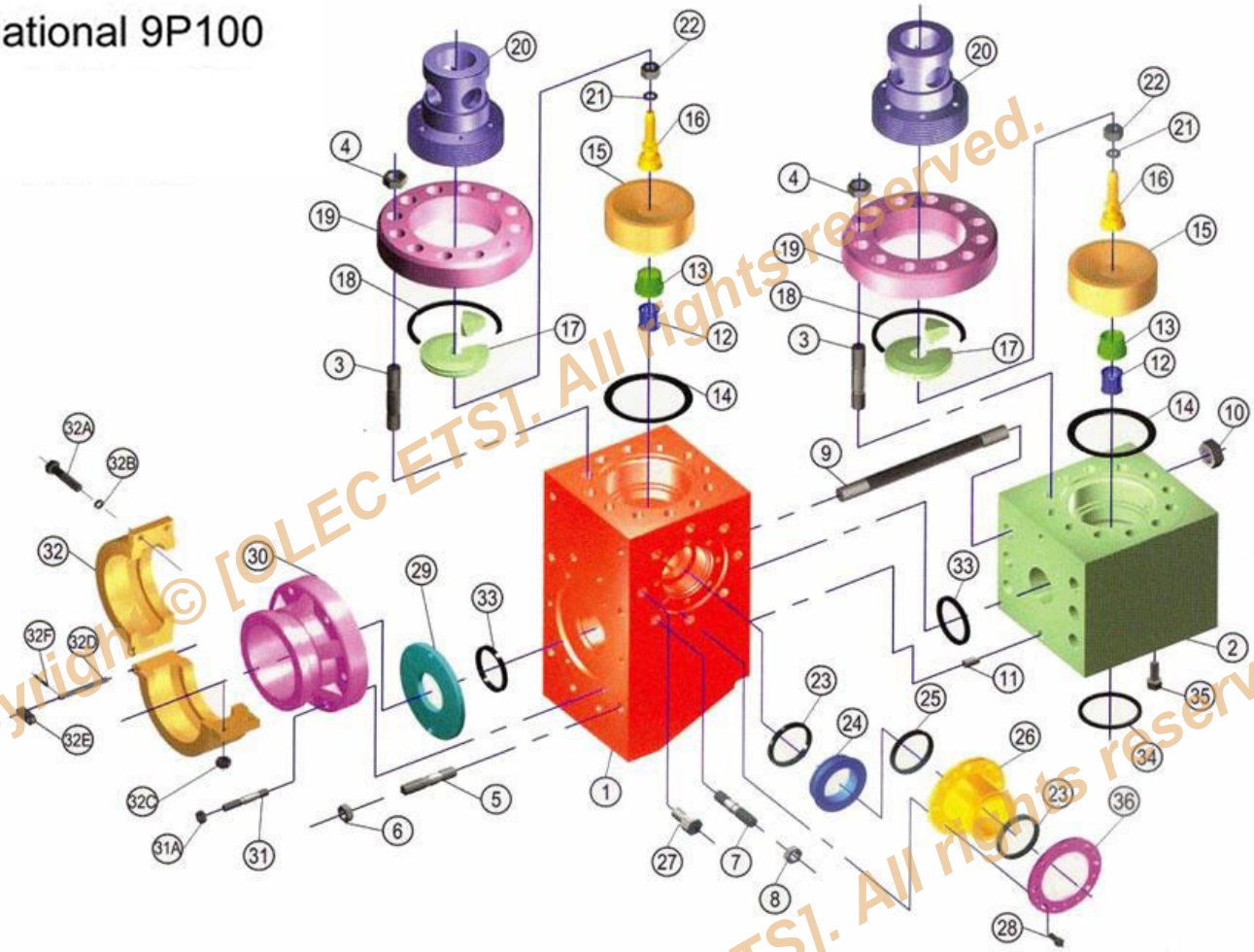

Copyright © [OLEC ETS]. All rights reserved.

National 9P100 O.E.M. Stlye Fluid End and Spares

Item No.	OEM Part No.	Description	Qty/Pump
1	1293240	Discharge Fluid End Module, Studded	3
2	1290338	Suction Fluid End Module, Studded	3
3 & 4	Assembly	Threaded Ring Stud, w/ Nut	72
3	2408019	Threaded Ring Stud	72
4	6300220	Threaded Ring Stud, Nut	72
5 & 6	Assembly	Power End Stud, w/ Nut	24
5	2408030	Power End Stud	24
6	6300200	Power End Stud, Nut	24
7	2402560	Discharge Spacer Stud	16
8	6300200	Discharge Spacer Stud, Nut	16
9 & 10	Assembly	Suction Module Stud, w/ Nut	18
9	2408034	Suction Module Stud	18
10	6300241	Suction Module Stud, Nut	18
11	6511416	Dowell Pin	6
12	1292141	Valve Guide Bushing	6
13	1292140	Valve Guide Holder	6
14	1540126	Valve Cover Gasket	6
15	1290174	Seal Retainer (includes item 12)	6
16, 17, 21 & 22	Assembly	Locking Wedge Assembly (Wilson Assembly)	6
16	1290178	Wedge Adjusting Screw	6
17	G1290376	Locking Wedge Assembly	6
18	1290181	Locking Wedge Spring	6
19	1290308	Threaded Ring	6
20	1290307	Vavle Cover Lock	6
21	1290315	Wedge Adjusting Screw, Washer	6
22	6300160	Wedge Adjusting Screw, Nut	6
23	2410031427	Discharge Adapter & Connector Packing	4
24	1290343	Discharge Adapter	2
25	2410031348	Discharge Connector Packing	2
26	1290342	Discharge Connector	2
27	7006606	Discharge Spacer Flange Capscrew (1 1/4x 3 1/4)	16
28	700030511	Discharge Connector Capscrew (1/2-13x1 1/2)	16
29	1290357	Wear Plate	3
30	1293165	Liner Bushing	3
31 & 31A	Assembly	Liner Bushing Stud w/ Nut	18
31	2408018	Liner Bushing Stud	18
31A	6300160	Liner Bushing Stud Nut	18
32	1293166	Liner Clamp	3
32A	700044811	Liner Clamp Screw	6
32B		Lock Washer	6
32C	6309120	Maclean -Fogg 22TWA5811	6
32D	1290169	Liner Clamp Pin	6
32E	1290168	Liner Clamp Connector	6
32F	6571420	Pin Spring	12
33	1290344	Wear Plate Seal , Suction to Discharge Seal	6
34	1590051	Suction Manifold Gasket	3
35	700048310	Suction Manifold Bolt (w/ Washer)	24

Copyright © [OLEC ETS]. All rights reserved.

NATIONAL			10-P-130					6-3/4*10
	LINERS		LINER GASKETS		PISTONS		PISTON REPLACEMENT RUBBERS	
SIZE	SUPREME	CERAMIC	RUBBER	URETHANE	SUPREME	WHITE LIGHTNING	SUPREME	WHITE LIGHTNING
4"	LC05465400	LC07465400	LC07923274		LC012180170		LC015180102	
4-1/4"								
4-1/2"	LC05465450	LC07465450	LC07923274		LC012180196	LC012180197	LC015180144	LC015180145
4-3/4"								
5"	LC05465500	LC07465500	LC07923265	LC07211011	LC012180253	LC012180254	LC015180185	LC015180186
5-1/4"								
5-1/2"	LC05465550	LC07465550	LC07923263	LC07211005	LC012180337	LC012180338	LC015180227	LC015180228
5-3/4"								
6"	LC05465600*	LC07465600	LC07923261	LC07211004	LC012180394	LC012180395	LC015180268	LC015180269
6-1/4"	LC05465652*				LC012180493	LC012180494	LC015180284	LC015180285
6-1/2"	LC05465650*		LC07923283		LC012180535	LC012180536	LC015180300	LC015180301
6-3/4"								
7"								
7-1/4"								
7-1/2"								
7-3/4"								
8"								

GASKETS		OEM	OEM URETHANE	L STYLE	L STYLE URETHANE
	VALVE COVER	LC1540137	LC1540126		
	WEAR PLATE	LC1290344	LC07211023		

DESCRIPTION	SUPREME	ROUGHNECK	ROUGHNECK HP	FKN	
VALVE (White Insert)	LC060152809	LC9700367	LC9700359		
VALVE (Urethane Insert)	LC060152808	LC9700285	LC9700353	LC1560995	
VALVE (Rubber)	LC060122702	LC9702601		LC1560994	
VALVE SEAT	LC061102604	LC9702555	LC9702555	LC1561450	
INSERT (Urethane)	LC062400106	LC9705090	LC9700363	LC1560587	
INSERT (Rubber)	LC062400056	LC9705155		LC1560588	
VALVE SPRING	LC055413421	LC8201684	LC8201684	LC1560701	
VALVE LOCK				LC1560706	
VALVE RING				LC1560705	
SEAT PULLER ASSEMBLY	LCM1060	LCM1060	LCM1060	LCM1060	
PULLER HEAD-SPLIT JAW		LCM1093	LCM1093	LCM1089	
PULLER HEAD	LC181235052	LC8401977	LC8401977		

Model	CROSSHEAD ROD	SELF ALIGNING ROD ASSEMBLY	PONY ROD BAFFLE	PISTON ROD	SUB ROD	PISTON ROD NUT	CLAMP ASSEMBLY	Pony Rod Seal
10-P-130	LC1602560		LC1290194	LC1290347	LC1290346	LC005402052	LC1290085	LC1283099

Copyright © [OLEC ETS]. All rights reserved.

National 10P130

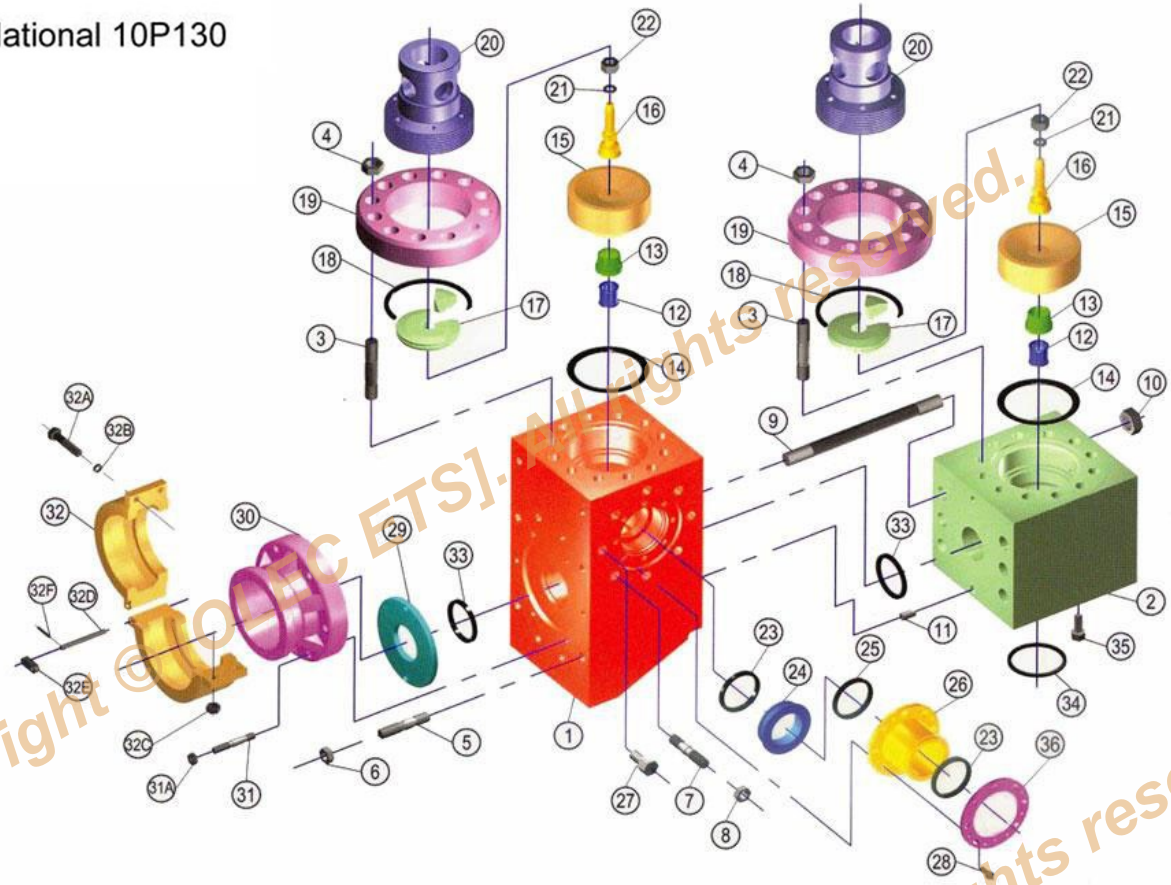

Mission Fluid End Module and Accessories
National 10-P-130
OEM Style Fluid End
With OEM Fast Change Valve Cover

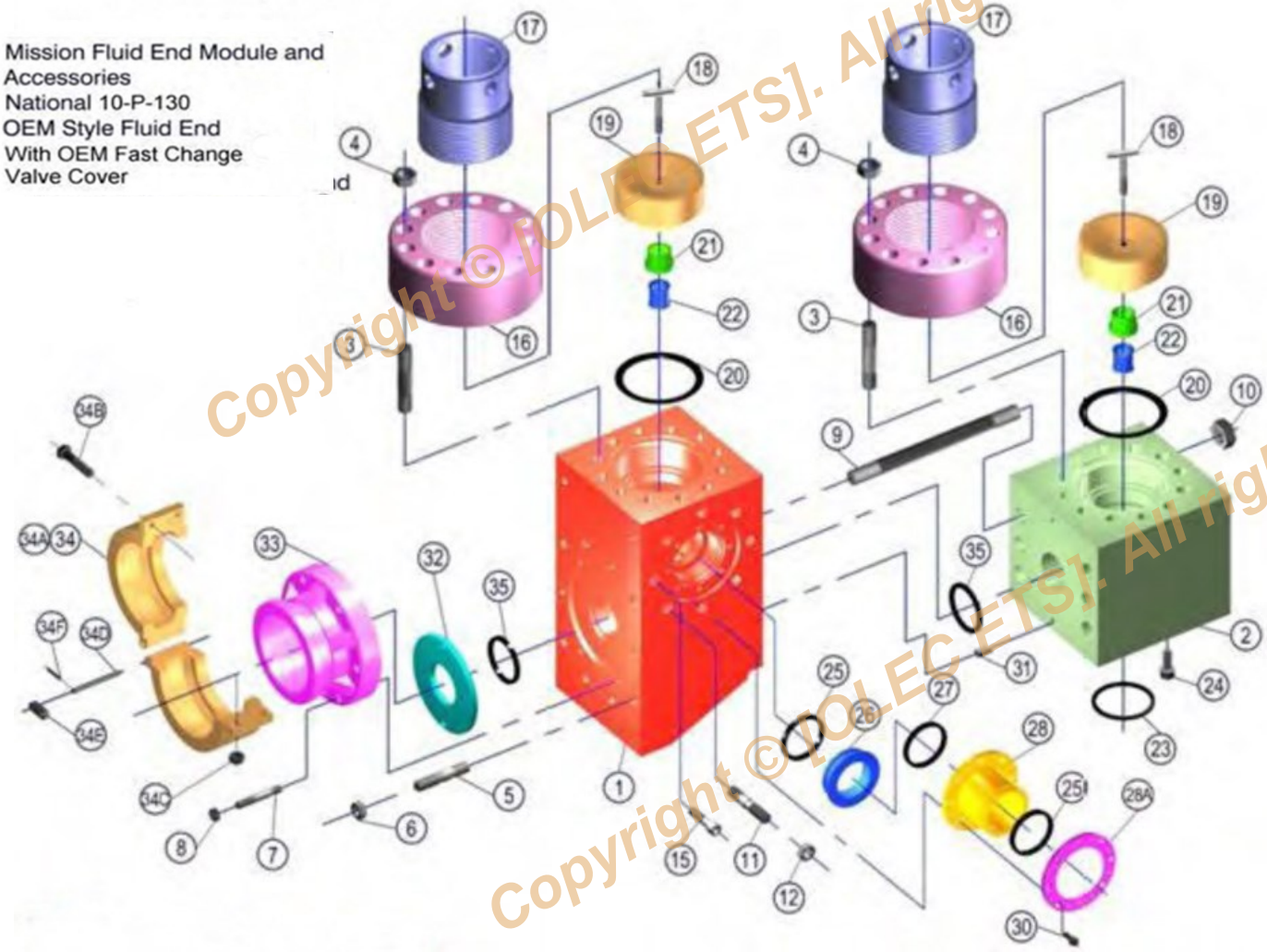

Copyright © [OLEC ETS]. All rights reserved.

National 10P130 O.E.M. Stlye Fluid End and Spares

Item No.	OEM Part No.	Description	Qty/Pump
1A	1290335	Discharge Fluid End Module, Studded	
1	1290336	Discharge Module, Only	3
2A	1290338	Suction Fluid End Module, Studded	
2	1290339	Suction Module, Only	3
3 & 4	Assembly	Threaded Ring Stud, w/ Nut	72
3	2408019	Threaded Ring Stud	72
4	6300220	Threaded Ring Stud, Nut	72
5 & 6	Assembly	Power End Stud, w/ Nut	24
5	2408020	Power End Stud	24
6	6300240	Power End Stud, Nut	24
7	2402560	Discharge Spacer Stud	16
8	6300200	Discharge Spacer Stud, Nut	16
9 & 10	Assembly	Suction Module Stud, w/ Nut	18
9	2408034	Suction Module Stud	18
10	6300241	Suction Module Stud, Nut	18
11	6511416	Dowell Pin	6
12	1292141	Valve Guide Bushing	6
13	1292140	Valve Guide Holder	6
14	1540126	Valve Cover Gasket	6
15	1290174	Seal Retainer (includes item 12)	6
16, 17, 21 & 22	Assembly	Locking Wedge Assembly (Wilson Assembly)	6
16	1290178	Wedge Adjusting Screw	6
17	G1290376	Locking Wedge Assembly	6
18	1290181	Locking Wedge Spring	6
19	1290308	Threaded Ring	6
20	1290307	Vavle Cover Lock	6
21	1290315	Wedge Adjusting Screw, Washer	6
22	6300160	Wedge Adjusting Screw, Nut	6
23	2410031427	Discharge Adapter & Connector Packing	4
24	1290343	Discharge Adapter	2
25	2410031348	Discharge Connector Packing	2
26	1290342	Discharge Connector	2
27	7006606	Discharge Spacer Flange Capscrew (1 1/4x 3 1/4)	16
28	700030511	Discharge Connector Capscrew (1/2-13x1 1/2)	16
29	1290357	Wear Plate	3
30	1290165	Liner Bushing	3
31 & 31A	Assembly	Liner Bushing Stud w/ Nut	18
31	2408018	Liner Bushing Stud	18
31A	6300160	Liner Bushing Stud Nut	18
32	1290166	Liner Clamp	3
32A	700044811	Liner Clamp Screw	6
32B		Lock Washer	6
32C	6309120	Maclean -Fogg 22TWA5811	6
32D	1290169	Liner Clamp Pin	6
32E	1290168	Liner Clamp Connector	6
32F	6571420	Pin Spring	12
33	1290344	Wear Plate Seal , Suction to Discharge Seal	6
34	1590051	Suction Manifold Gasket	3
35	700048310	Suction Manifold Bolt (w/ Washer)	24

Copyright © [OLEC ETS]. All rights reserved.

NATIONAL 10-P-130 W/ FAST CHANGE VALVE COVERS

FLUID END MODULE & ACCESSORIES

ITEM	OEM PART	DESCRIPTION	QTY PER PUMP
1	1290418	MODULE, STUDDED FLUID END DISCHARGE (INCLUDES ITEMS 1, 3-10)	3
2	1290419	MODULE, STUDDED FLUID END SUCTION (INCLUDES ITEMS 2-4)	3
3	2408050	STUD, THREADED RING (2" LONGER THAN STD FOR THICKER FLANGE)	72
4	6300220	NUT, THREADED RING STUD	72
5	2408020	STUD, POWER FRAME	24
6	6300240	NUT, POWER FRAME STUD	24
7	2408018	STUD, LINER BUSHING	16
8	6300160	NUT, LINER BUSHING STUD	16
9	2408034	STUD, DISCHARGE MODULE TO SUCTION MODULE	18
10	6300241	NUT, DISCHARGE TO SUCTION MODULE STUD	18
11	2402560	STUD, DISCHARGE SPACER	16
12	6300200	NUT, DISCHARGE SPACER STUD	16
13	1290348	SPACER, STUDDED DISCHARGE (NOT SHOWN) INCLUDES ITEMS 11 AND 12	2
14	1290345	SEAL, SPACER TO FLUID END (NOT SHOWN)	2
15	7006607	CAPSCREW, DISCHARGE SPACER FLANGE	16
16	1290451	RING, THREADED	6
17	1290452	CAP, VALVE COVER (THREADED)	6
18	1292353	PULLER, SEAL RETAINER	6
19	1290450	RETAINER, FAST CHANGE SCREW TYPE THREADED SEAL	6
20	1540126	GASKET, VALVE COVER - RUBBER (SEE DATASHEET FOR ALTERNATE MATERIALS)	6
21	1292140	RETAINER, VALVE GUIDE BUSHING	6
22	1292141	BUSHING,VALVE GUIDE	6
23	1590051	SEAL, SUCTION MANIFOLD	3
24	700048510	CAPSCREW, SUCTION MANIFOLD	24
25	2410031427	PACKING, DISCHARGE CONNECTOR & DISCHARGE ADAPTER	4
26	1290343	ADAPTER, DISCHARGE CONNECTOR	2
27	2410031348	PACKING, DISCHARGE CONNECTOR TO DISCHARGE ADAPTER	2
28	1290342	CONNECTOR, DISCHARGE	2
28A	1290175	RING, DISCHARGE CONNECTOR BACK UP	4
29	7619050	WASHER, DISCHARGE CONNECTOR SCREW (NOT SHOWN)	16
30	700030511	CAPSCREW, DISCHARGE CONNECTOR	16
31	6511416	PIN, DOWELL	6
32	1290357	PLATE, WEAR	3
33	1290165	BUSHING, LINER	3
34	1290166	ASSEMBLY, LINER CLAMP (INCLUDES ITEMS 34A, 34B, 34C, 34D, 34E, & 34F)	3
34A	1290167	LINER CLAMP	3
34B	700044811	CAPSCREW, LINER CLAMP	6
34C	6309120	NUT, LINER CAPSCREW	6
34D	1290169	PIN, CONNECTOR	6
34E	G1290168P	CONNECTOR, LINER CLAMP	6
34F	6571420	PIN, SPRING	12
35	1290344	SEAL, MODULE & WEARPLATE - RUBBER (SEE DATASHEET FOR ALTERNATE MATERIALS)	6

Copyright © [OLEC ETS]. All rights reserved.

NATIONAL			12-P-160					7-1/4*12
	LINERS		LINER GASKETS		PISTONS		PISTON REPLACEMENT RUBBERS	
SIZE	SUPREME	CERAMIC	RUBBER	URETHANE	SUPREME	WHITE LIGHTNING	SUPREME	WHITE LIGHTNING
4"			LC1540120		LC012180170		LC015180102	
4-1/4"								
4-1/2"			LC1540120		LC012180196	LC012180197	LC015180144	LC015180145
4-3/4"			LC1504121					
5"	LC05466500*	LC07466500	LC07923264		LC012180253	LC012180254	LC015180185	LC015180186
5-1/4"								
5-1/2"	LC05466550*	LC07466550	LC07923263	LC07211005	LC012180337	LC012180338	LC015180227	LC015180228
5-3/4"								
6"	LC05466600*	LC07466600	LC07923261	LC07211004	LC012180394	LC012180395	LC015180268	LC015180269
6-1/4"	LC05466625*		LC07923283		LC012180493	LC012180494	LC015180284	LC015180285
6-1/2"	LC05466650*	LC07466650	LC07923284	LC07211003	LC012180535	LC012180536	LC015180300	LC015180301
6-3/4"	LC05466675		LC07923287		LC012180600			
7"	LC05466700*	LC07466700	LC07923285	LC07211002	LC012180618	LC012180619	LC015180342	LC015180343
7-1/4"	LC05466725		LC1540154		LC012180642			
7-1/2"								
7-3/4"								
8"								

GASKETS		OEM	OEM URETHANE	L STYLE	L STYLE URETHANE
	VALVE COVER	LC1540138	LC1540127	LC07207119	LC07211013
	WEAR PLATE	LC1295257		LC1290344	LC07211023

DESCRIPTION	SUPREME	ROUGHNECK	ROUGHNECK HP	FKN	
VALVE (White Insert)	LC060155042	LC9700368	LC9700356		
VALVE (Urethane Insert)	LC060155041	LC9700250	LC9700354	LC1560985	
VALVE (Rubber)	LC060155033	LC9700293		LC1560984	
VALVE SEAT	LC061102505	LC9702539	LC9702539	LC1561440	
INSERT (Urethane)	LC062400338	LC9705228	LCPF071	LC1560557	
INSERT (Rubber)	LC062400239	LC9705244		LC1560558	
VALVE SPRING	LC055413421	LC8201684	LC8201684	LC1560702	
VALVE LOCK				LC1560706	
VALVE RING				LC1560705	
SEAT PULLER ASSEMBLY	LCM1060	LCM1060	LCM1060	LCM1060	
PULLER HEAD-SPLIT JAW		LC8401705	LC8401705	LCM1098	
PULLER HEAD	LC181235300	LC8401985	LC8401985		

Model	CROSSHEAD ROD	SELF ALIGNING ROD ASSEMBLY	PONY ROD BAFFLE	PISTON ROD	SUB ROD	PISTON ROD NUT	CLAMP ASSEMBLY	Pony Rod Seal
12-P-160	LC1602586	LC2095220	LC1292194	LC1292147	LC1292146	LC005402052	LC1292085 LC80701028	LC1292182

Copyright © [OLEC ETS]. All rights reserved.

National 12P160

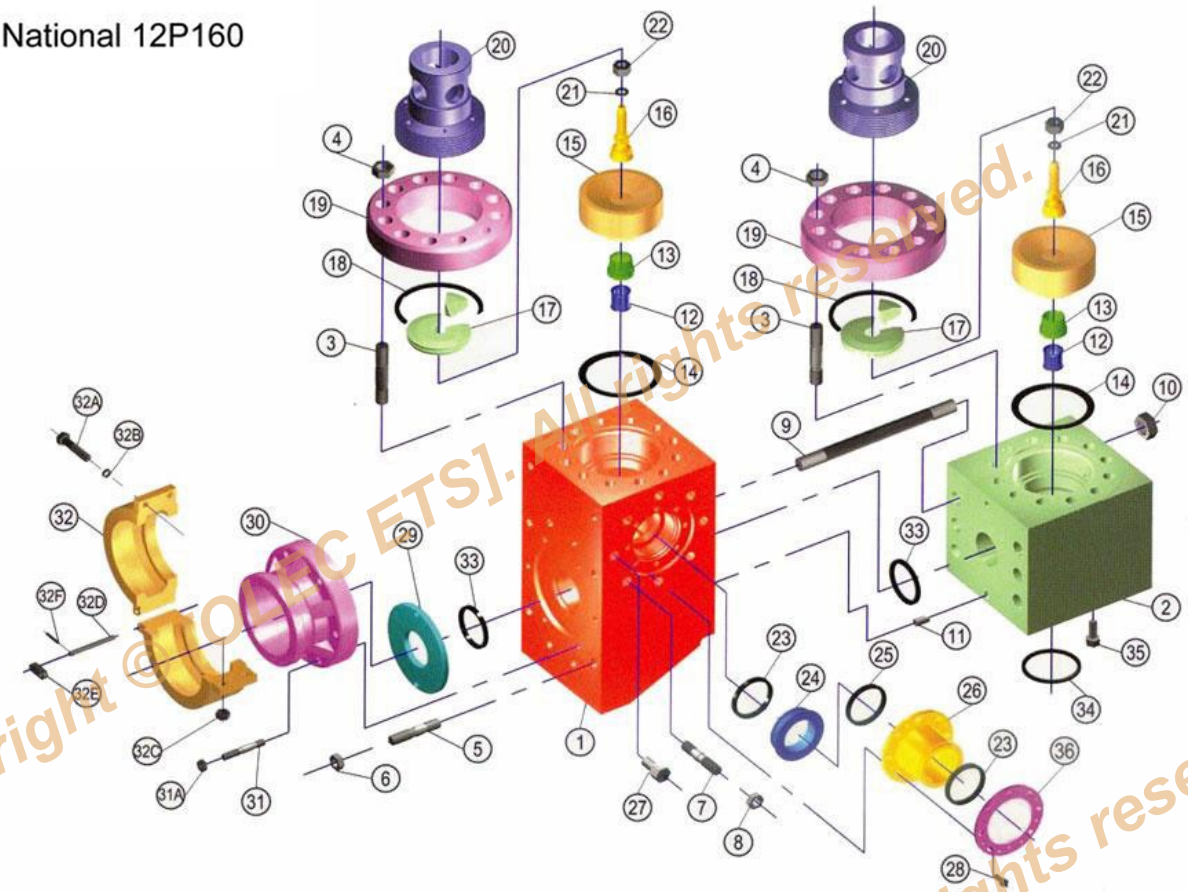

Mission Fluid End Module and Accessories
National 12-P-160
OEM Style Fluid End
With OEM Fast Change Valve Cover

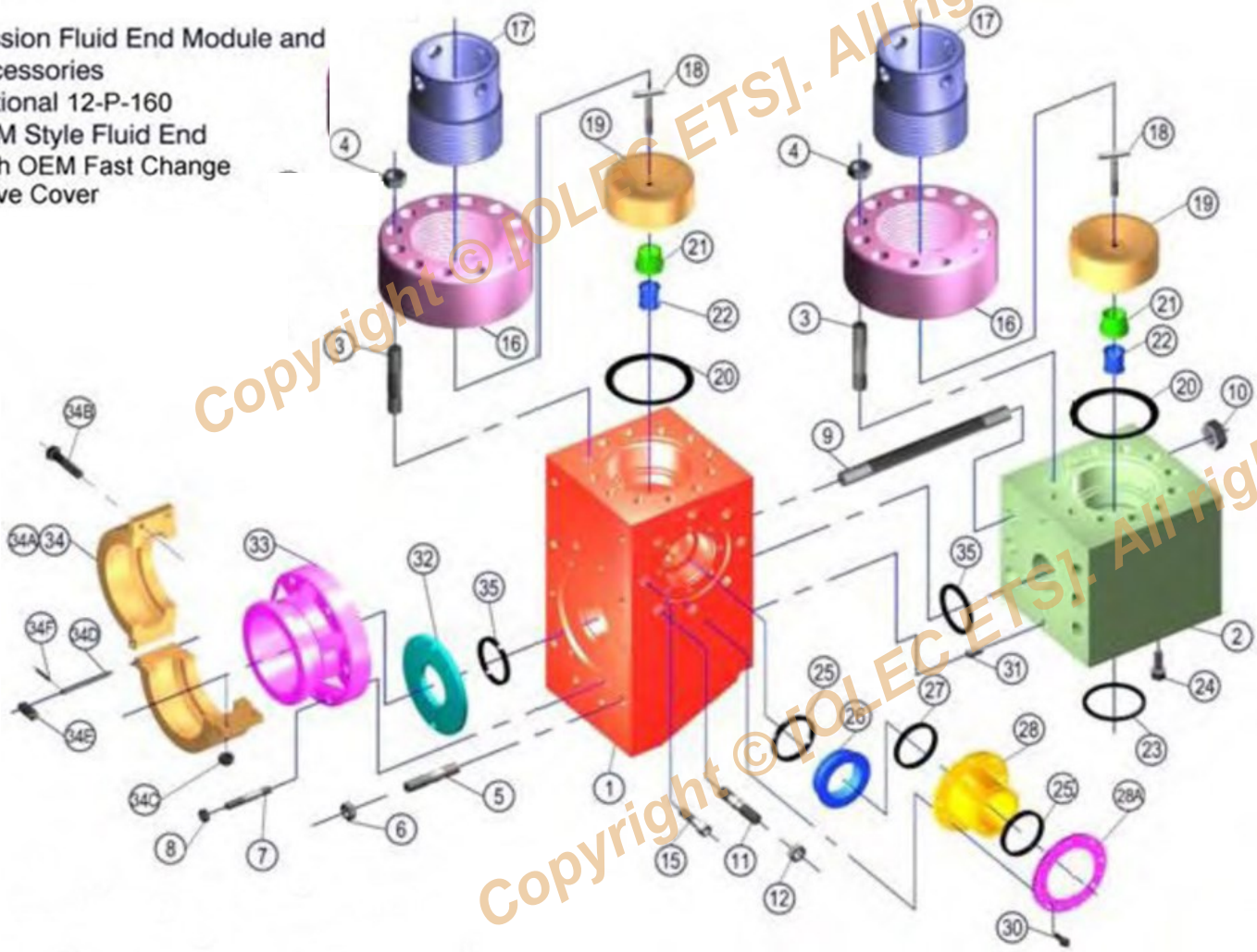

Copyright © [OLEC ETS]. All rights reserved.

National 12P160 O.E.M. Stlye Fluid End & Spares

Item No.	OEM Part No.	Description	Qty/Pump
1A	1292240	Discharge Fluid End Module, Studded	
1	1292241	Discharge Module,Only	3
2A	1292243	Suction Fluid End Module, Studded	
2	1292244	Suction Module, Only	3
3 & 4	Assembly	Threaded Ring Stud, w/ Nut	72
3	2408027	Threaded Ring Stud	72
4	6300240	Threaded Ring Stud, Nut	72
5 & 6	Assembly	Power End Stud, w/ Nut	30
5	2408029	Power End Stud	30
6	6300220	Power End Stud, Nut	30
7	2408015	Discharge Spacer Stud	16
8	6300240	Discharge Spacer Stud, Nut	16
9 & 10	Assembly	Suction Module Stud, w/ Nut	18
9	2408033	Suction Module Stud	18
10	6300281	Suction Module Stud, Nut	18
11	6511416	Dowell Pin	6
12	1292141	Valve Guide Bushing	6
13	1292140	Valve Guide Holder	6
14	1540127	Valve Cover Gasket	6
15	1292174	Seal Retainer (includes item 12)	6
16, 17, 21 & 22	Assembly	Locking Wedge Assembly (Wilson Assembly)	6
16	1292178	Wedge Adjusting Screw	6
17	G1292268	Locking Wedge Assembly	6
18	1292181	Locking Wedge Spring	6
19	1292176	Threaded Ring	6
20	1292172	Vavle Cover Lock	6
21	1292171	Wedge Adjusting Screw, Washer	6
22	6300182	Wedge Adjusting Screw, Nut	6
23	2410031437	Discharge Adapter & Connector Packing	4
24	1292253	Discharge Adapter	2
25	2410031433	Discharge Connector Packing	2
26	1292252	Discharge Connector	2
27	7006685	Discharge Spacer Flange Cap Screw (1 1/2-6x3)	16
28	700030711	Discharge Connector Capscrew (1/2-13X2)	16
29	1292266	Wear Plate	3
30	1292165	Liner Bushing	3
31 & 31A	Assembly	Liner Bushing Stud w/ Nut	18
31	2408028	Liner Bushing Stud	18
31A	6300180	Liner Bushing Stud Nut	18
32	1292166	Liner Clamp	3
32A	700049110	Liner Clamp Screw	6
32B		Lock Washer	6
32C	6309140	Maclean -Fogg 22TWA5811	6
32D	1292169	Liner Clamp Pin	6
32E	1292168	Liner Clamp Connector	6
32F	6571620	Pin Spring	12
33	1292257	Wear Plate Seal , Suction to Discharge Seal	6
34	1540851	Suction Manifold Gasket	3
35	7000485	Suction Manifold Bolt (w/ Washer)	24

Copyright © [OLEC ETS]. All rights reserved.

12-P-60 "L" SHAPED New Style			
Item	Part No.	Description	Qty per Pump
	LC-8476-4A	Complete Assembly	(3)
	LC-8476-5	Fluid Module, Discharge - Studded (included Items 1-4)	(3)
1		Fluid Module - Discharge	3
2	LC-4015-95	Stud w/Nut - Frame	30
3	LC-4018-17	Stud w/Nut - Suction Module	18
4	LC-4015-54	Stud w/Nut - Valve Cover	72
	LC-8476-6	Fluid Module, Suction - Studded (included items 4-5)	(3)
5		Fluid Module - Suction	3
6	LC-8488-5	Dowel Pin	6
7	LC-1540851	Seal - Suction Manifold	3
8	LC-4476	Threaded Flange	6
9	LC-4597	Screw Gland	6
	LC-4676-6A	Valve Cover Plug Assembly (included items 10-13)	(6)
10	LC-4676-6	Plug - Valve Cover	6
11	LC-4776	Valve Guide	6
12	LC-4016-98	Screw - Valve Guide	16
13	LC-4700-I	Insert - Valve Guide	6
14	LC-P119	Seal - Valve Cover Plug	6
15	LC-6476	Liner Retainer Flange	3
16	LC-4017-65	Capscrew - Liner Retainer	18
17	LC-6576	Nut - Liner Retainer	3
18	LC-8476-3	Plate - Wear	3
19	LC-2988	Seal - Module and Wear Plate	6

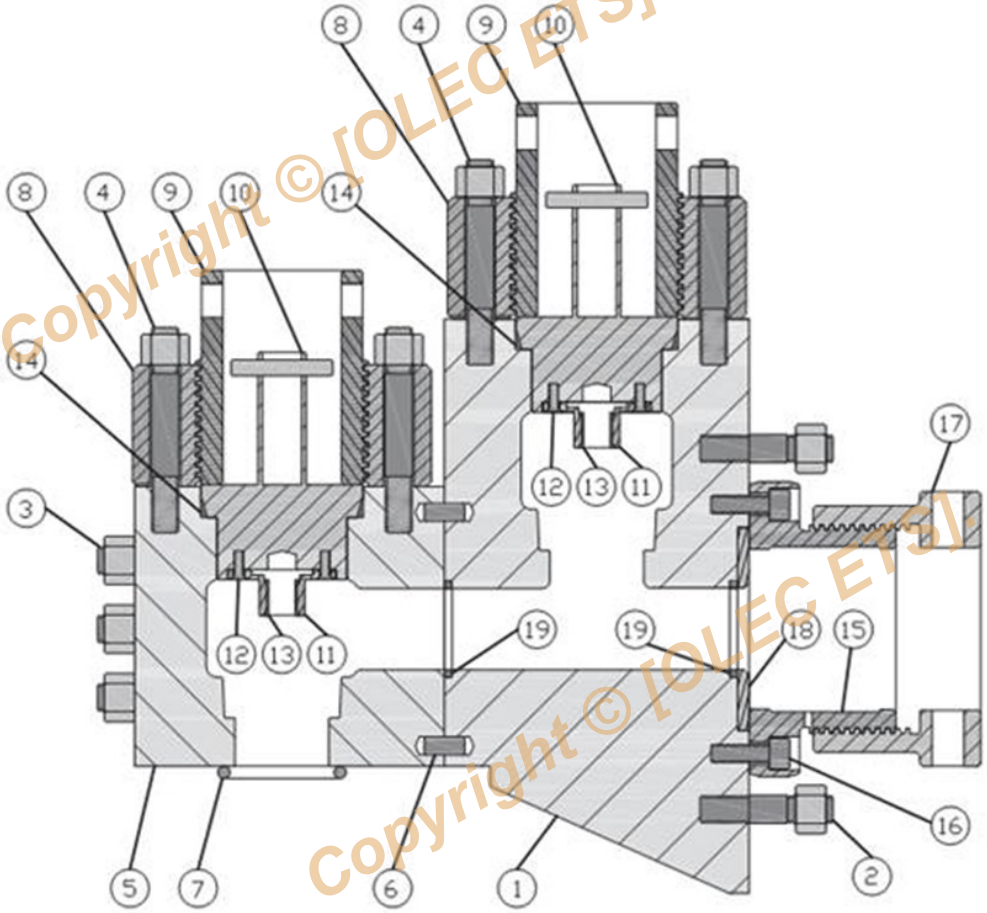

Copyright © [OLEC ETS]. All rights reserved.

NATIONAL	14-P-200,14-P-220							9*14
	LINERS		LINER GASKETS		PISTONS		PISTON REPLACEMENT RUBBERS	
SIZE	SUPREME	CERAMIC	RUBBER	URETHANE	SUPREME	WHITE LIGHTNING	SUPREME	WHITE LIGHTNING
4"					LC012180170		LC015180102	
4-1/4"								
4-1/2"					LC012180196	LC012180197	LC015180144	LC015180145
4-3/4"								
5"	LC05545500	LC07545500	LC07923264		LC012180253	LC012180254	LC015180185	LC015180186
5-1/4"								
5-1/2"	LC05545550	LC07545550	LC07923263	LC07211005	LC012180337	LC012180338	LC015180227	LC015180228
5-3/4"								
6"	LC05545600	LC07545600	LC07923261	LC07211004	LC012180394	LC012180395	LC015180268	LC015180269
6-1/4"					LC012180493	LC012180494	LC015180284	LC015180285
6-1/2"	LC05545650	LC07545650	LC07923284	LC07211003	LC012180535	LC012180536	LC015180300	LC015180301
6-3/4"								
7"	LC05545700	LC07545700	LC07923285	LC07211002	LC012180618	LC012180619	LC015180342	LC015180343
7-1/4"								
7-1/2"	LC05545750	LC07545750	LC1540155		LC012180683		LC015180367	LC015180369
7-3/4"								
8"	LC05545800	LC07545800	LC1540157		LC012180725			

GASKETS		OEM	OEM URETHANE	L STYLE	L STYLE URETHANE
	VALVE COVER	LC1540163	LC07211028		
	WEAR PLATE	LC1295257			

DESCRIPTION	SUPREME	ROUGHNECK	ROUGHNECK HP	FKN	
VALVE (White Insert)		LC9700369			
VALVE (Urethane Insert)		LC9700382		LC1560965	
VALVE (Rubber)				LC1560964	
VALVE SEAT		LC9702751		LC1561410	
INSERT (Urethane)		LC9705236		LC1560567	
INSERT (Rubber)				LC1560702	
VALVE SPRING		LC055413256		LC1560703	
VALVE LOCK				LC1560706	
VALVE RING				LC1560705	
SEAT PULLER ASSEMBLY		LCM1060			
PULLER HEAD-SPLIT JAW		LC8401706			
PULLER HEAD-PANCAKE		LC8402256			

Model	CROSSHEAD ROD	SELF ALIGNING ROD ASSEMBLY	PONY ROD BAFFLE	PISTON ROD	SUB ROD	PISTON ROD NUT	CLAMP ASSEMBLY	Pony Rod Seal
14-P-200 14-P-220	LC1295083		LC1292194	LC1295147	LC1295146	LC005402052	LC1295085	LC1295182

OLEC Engineering technology services

olecets.com sales@olecets.com +33 786843374

OLECETS

Copyright © [OLEC ETS]. All rights reserved.

Mission Fluid End Module and Accessories
National 14-P-220
OEM Style Fluid End

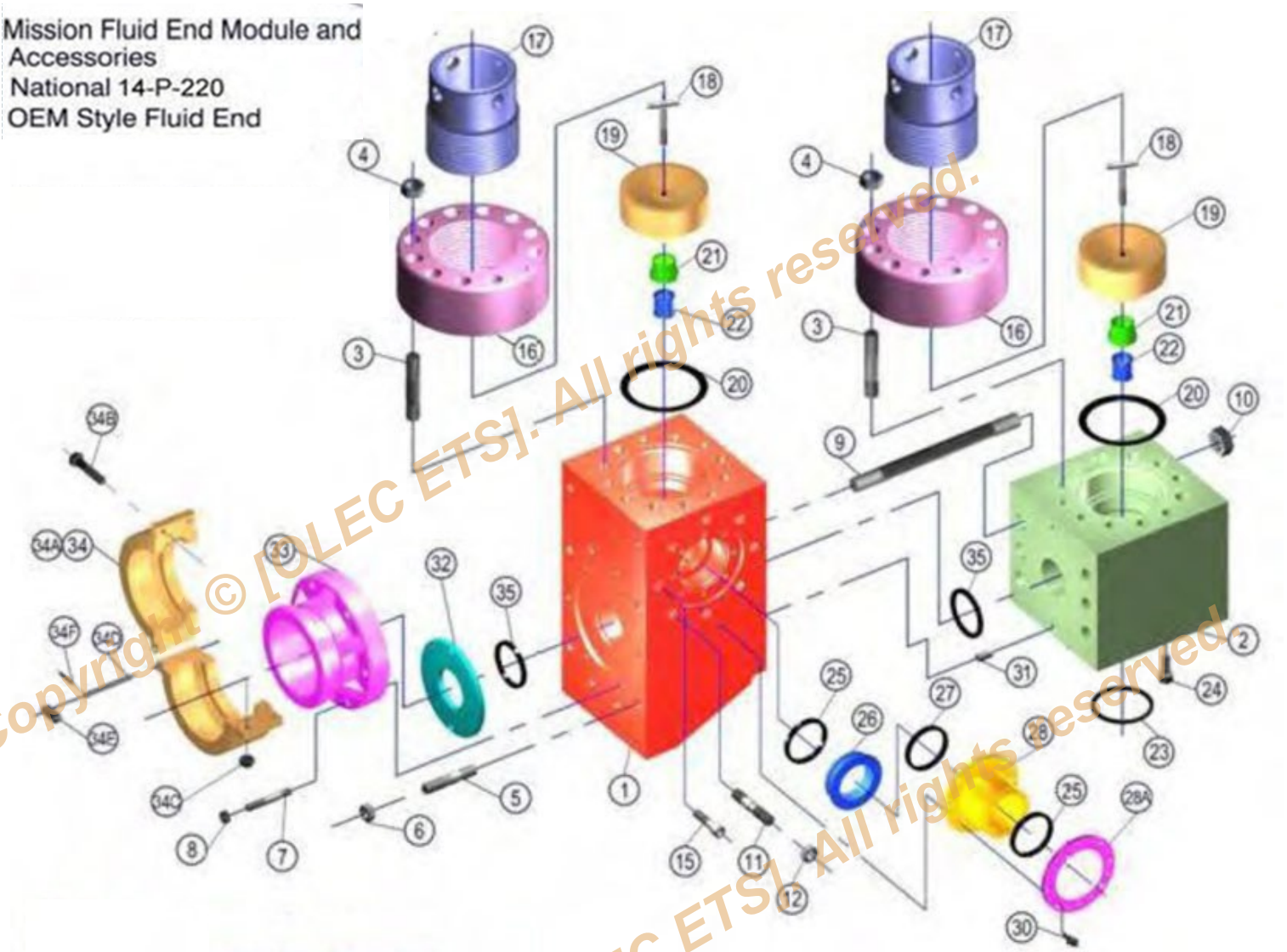

Copyright © [OLEC ETS]. All rights reserved.

NATIONAL 14-P-220 (7500 PSI) W/ FAST CHANGE VALVE COVERS

FLUID END MODULE & ACCESSORIES

ITEM #	OEM PART #	DESCRIPTION	QTY PER PUMP
	80718020	ASSY, COMPLETE FLUID END W/ VALVE SERVICE & SUCTION MANIFOLD	1
1	1295601	MODULE, STUDDED FLUID END DISCHARGE (INCLUDES ITEMS 1, 3-10)	3
2	1295604	MODULE, STUDDED FLUID END SUCTION (INCLUDES ITEMS 2, 3-4)	3
3	2408049	STUD, VALVE COVER	84
4	6300240	NUT, VALVE COVER STUD	84
5	2408027	STUD, POWER FRAME	30
6	6300240	NUT, POWER FRAME STUD	30
7	2408047	STUD, LINER BUSHING	18
8	6300200	NUT, LINER BUSHING STUD	18
9	2408048	STUD, SUCTION TO DISCHARGE MODULE	18
10	6300320	NUT, SUCTION TO DISCHARGE MODULE STUD	18
11	2408014	STUD, DISCHARGE FLANGE	12
12	6300180	NUT, DISCHARGE FLANGE STUD	12
13	1295262	SPACER, STUDDED DISCHARGE (NOT SHOWN) INCLUDED ITEM# 11 AND 12	2
14	1295258	SEAL, DISCHARGE SPACER (NOT SHOWN)	2
15	7006609	CAPSCREW, DISCHARGE SPACER FLANGE	24
16	1295176	RING, THREADED F/C	6
17	1295172	CAP, VALVE COVER (THREADED) F/C	6
18	1292353	PULLER, SEAL RETAINER	6
19	1295174	RETAINER, SEAL	6
20	1540163	SEAL, VALVE COVER	6
21	1292140	HOLDER, VALVE GUIDE INSERT	6
22	1292141	INSERT, VALVE GUIDE	6
23	1540021	SEAL, SUCTION MANIFOLD	3
24	700048511	CAPSCREW, SUCTION MANIFOLD	24
25	2410031440	SEAL, DISCHARGE CONNECTOR & DISCHARGE ADAPTER	4
26	1295253	ADAPTER, DISCHARGE CONNECTOR	2
27	2410031438	SEAL, DISCHARGE CONNECTOR TO DISCHARGE ADAPTER	2
28	1295252	CONNECTOR, DISCHARGE	2
28A	1295175	RING, DISCHARGE CONNECTOR BACK UP	4
29	7619050	WASHER, DISCHARGE CONNECTOR CAPSCREW (NOT SHOWN)	16
30	700030711	CAPSCREW, DISCHARGE CONNECTOR	16
31	6511416	PIN, DOWELL	6
32	1295266	PLATE, WEAR	3
33	1295165	BUSHING, LINER	3
34	1295166	CLAMP COMPLETE, LINER (INCLUDES ITEMS 34A, 34B, 34C, 34D, 34E, 34F)	3
34A	1295167	CLAMP, LINER	3
34B	700049110	CAPSCREW, LINER CLAMP	6
34C	6309140	NUT, LINER CAPSCREW	6
34D	1292169	PIN, LINER CLAMP	6
34E	G1292168P	CONNECTOR, LINER CLAMP	6
34F	6571620	PIN, SPRING	12
35	1295257	SEAL, WEAR PLATE AND SUCTION TO DISCHARGE MODULE	6

Copyright © [OLEC ETS]. All rights reserved.

OIL WELL	A-850-PT,A-1100-PT	7-1/2*9,7-1/2*10

	LINERS		LINER GASKETS		PISTONS		PISTON REPLACEMENT RUBBERS	
SIZE	SUPREME	CERAMIC	RUBBER	URETHANE	SUPREME	WHITE LIGHTNING	SUPREME	WHITE LIGHTNING
4"					LC012180170		LC015180102	
4-1/2"					LC012180196	LC012180197	LC015180144	LC015180145
5"	LC05330501	LC07330501	LC20100008	LC07211022	LC012180253	LC012180254	LC015180185	LC015180186
5-1/2"	LC05330551	LC07330551	LC20100009	LC07211020	LC012180337	LC012180338	LC015180227	LC015180228
6"	LC05330601	LC07330601	LC20100011	LC07211019	LC012180394	LC012180395	LC015180268	LC015180269
6-1/4"					LC012180493	LC012180494	LC015180284	LC015180285
6-1/2"	LC05330651	LC07330651	LC20100012	LC07211018	LC012180535	LC012180536	LC015180300	LC015180301
6-3/4"								
7”	LC05330700	LC07330700	LC20100017	LC07211017	LC012180618	LC012180619	LC015180342	LC015180343
7-1/2”	LC05330750		LC20100019					

GASKETS		OEM	OEM URETHANE	L STYLE	L STYLE URETHANE
	VALVE COVER	LC10300011	LC07211021	LC07207129	LC07211007
	CYLINDER HEAD				
	WEAR PLATE	LC20100008	LC07211022	LC20100008	LC07211022

DESCRIPTION	SUPREME	ROUGHNECK	ROUGHNECK HP		
VALVE (White Insert)	LC060155042	LC9700368	LC9700356		
VALVE (Urethane Insert)	LC060155041	LC9700250	LC9700354		
VALVE (Rubber)	LC060155033	LC9700293			
VALVE SEAT	LC061101507	LC9702504	LC9702504		
INSERT (Urethane)	LC062400338	LC9705228	LCPF071		
INSERT (Rubber)	LC062400239	LC9705244			
VALVE SPRING	LC055403257	LC055213417	LC055213417		
SEAT PULLER ASSEMBLY	LCM1060	LCM1060	LCM1060		
PULLER HEAD	LC181235300	LC8401985	LC8401985		

Model	CROSSHEAD ROD	SELF ALIGNING ROD ASSEMBLY	PONY ROD BAFFLE	PISTON ROD	SUB ROD	STUD	PISTON ROD NUT
A-850-PT & A-1100-PT	LC10300142		LC20460668 LC20640671	LC20150123	LC20150125	LC10305203	LC005402052
	CLAMP ASSEMBLY	Pony Rod Seal					
	LC80701024	LC20100015					

Copyright © [OLEC ETS]. All rights reserved.

Oil well A850PT, A1100PT, A1400PT & A1700PT O.E.M. Style Fluid End & Spares			
Item No.	OEM Part No.	Description	Qty/Pump
1	10300181	Fluid End Module Studded	3
2 & 3	Assembly	Discharge Manifold Stud w/ Nut	12
2	40001892	Discharge Manifold Stud	12
3	75511754	Discharge Manifold Stud Nut	12
4 & 5	Assembly	Power End Stud w/ Nut	12
4	49002837	Power End Stud	12
5	75510126	Power End Stud Nut	12
6	20100008	Wear Plate Seal	3
7	10300184	Wear Plate	3
8	10300183	Liner Adapter	3
Not Shown	10303091	Liner Centering Sleeve (A850 - A1100PT)	3
Not Shown	10300186	Liner Centering Sleeve (A1400 - A1700PT)	3
10	10300186	Liner Spacer Ring	3
11	10303092	Liner Adapter Nut (A850 - A1100PT)	3
11A	10300182	Liner Adapter Nut (A1400- A1700PT)	3
12	20200004	Valve Guide Bushing	6
13	75632234	Lower Valve Guide Bolt	24
14	10300004	Lower Valve Guide	6
15	10300011	Valve Gover Gasket	6
16	10300005	Valve Cover	6
17	99609345	Discharge Manifold Gasket	3
18	10300201	Suction Manifold Gasket	3
19	75634382	Suction Manifold Bolt w/ Washer	24

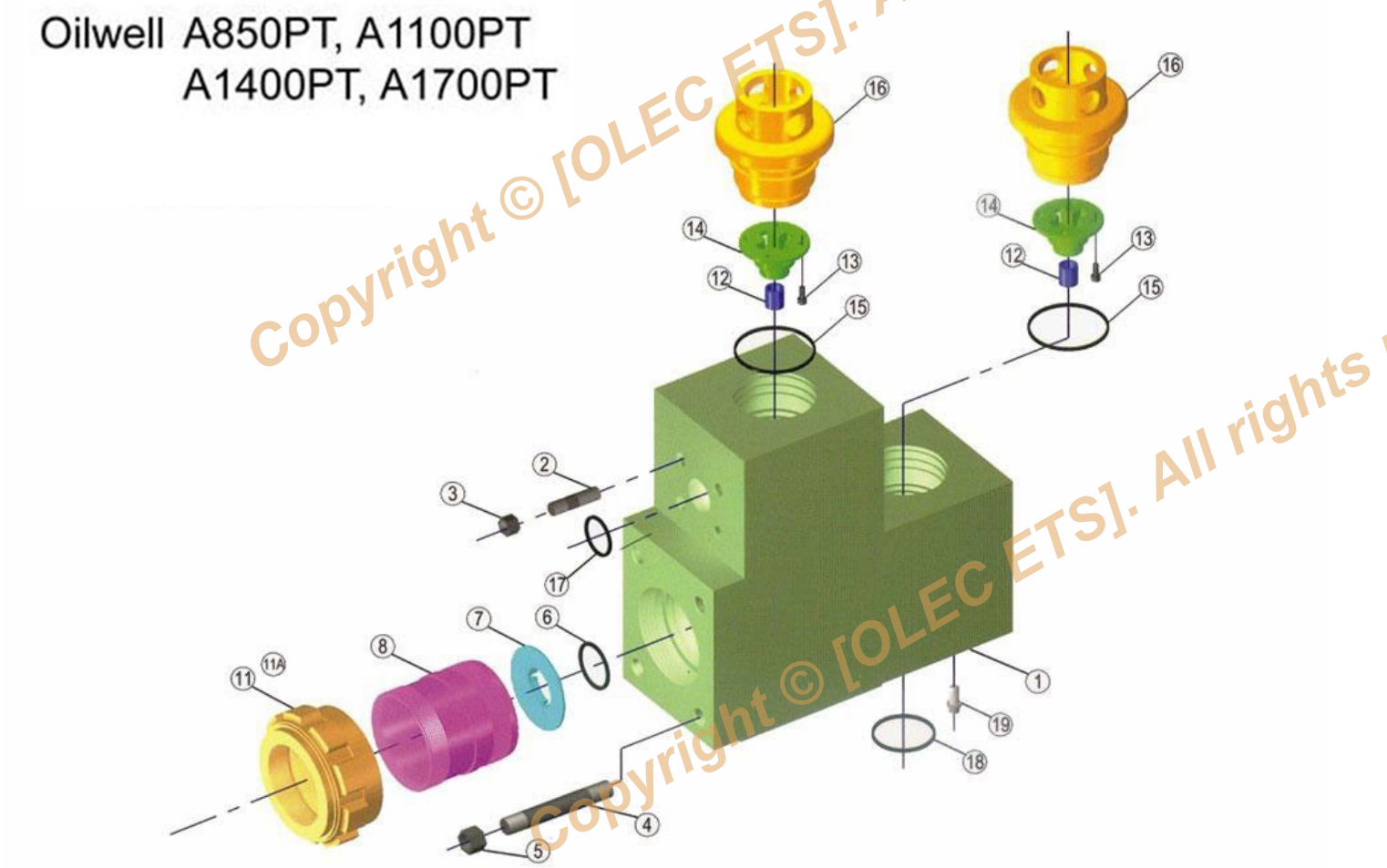

Copyright © [OLEC ETS]. All rights reserved.

A-850-PT, A-1100-PT, A-1400-PT & A-1700-PT "L" SHAPED			
Item	Part No.	Description	Qty per Pump
	LC-8488-1A	Complete Assembly	(3)
	LC-8488-1	Fluid Module, Discharge - Studded (included items 1-5)	(3)
1		Fluid Module - Discharge	3
2	LC-4016-96	Stud w/Nut - Frame	12
3	LC-4016-97	Stud w/Nut - Suction Module	18
4	LC-4016-3	Stud w/Nut - Discharge Manifold	12
5	LC-4015-2	Stud w/Nut - Valve Cover	72
	LC-8488-2	Fluid Module, Suction - Studded (included items 5-6)	(3)
6		Fluid Module - Suction	3
7	LC-2988	Seal - Module	3
8	LC-10-300-201	Seal - Suction Manifold	3
9	LC-8488-5	Dowel Pin	6
10	LC-4475	Threaded Flange	6
11	LC-4575	Screw Gland	6
	LC-4675-1A	Valve Cover Plug Assembly (included items 12-15)	(6)
12	LC-4675-1	Plug - Valve Cover	6
13	LC-4775	Valve Guide	6
14	LC-4018-88	Screw - Valve Guide	12
15	LC-4700-I	Insert - Valve Guide	6
16	LC-P129	Seal - Valve Cover Plug	3
17	LC-6488-1	Liner Retainer Flange	3
18	LC-4017-4	Capscrew - Liner Retainer	24
19	LC-6588-1	Nut - Liner Retainer (Large OD Liner, LC-0284-XX)	3
20	LC-8488-7	Set Screw - Liner Retainer	9
21	LC-8488-4	Plate - Wear	3
22	LC-2974-1	Seal - Wear Plate	3

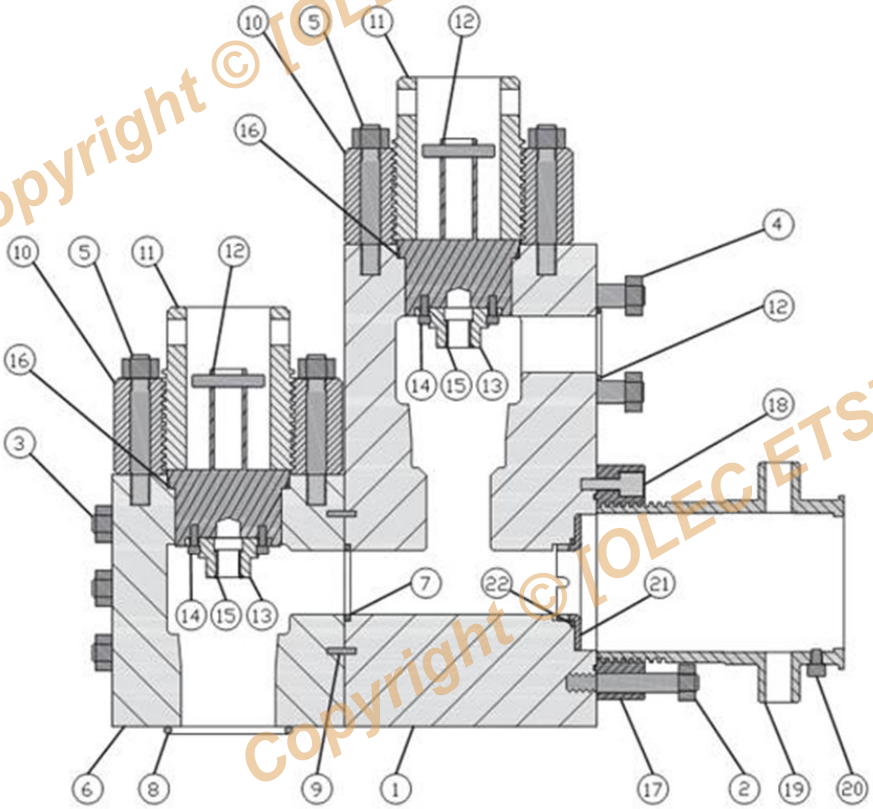

Copyright © [OLEC ETS]. All rights reserved.

OIL WELL	A-1400-PT,A-1700-PT	7-1/2*10,7-1/2*12

	LINERS		LINER GASKETS		PISTONS		PISTON REPLACEMENT RUBBERS	
SIZE	SUPREME	CERAMIC	RUBBER	URETHANE	SUPREME	WHITE LIGHTNING	SUPREME	WHITE LIGHTNING
4"					LC012180170		LC015180102	
4-1/2"					LC012180196	LC012180197	LC015180144	LC015180145
5"	LC05326501	LC07326501	LC20100008	LC07211022	LC012180253	LC012180254	LC015180185	LC015180186
5-1/2"	LC05326551	LC07326551	LC20100009	LC07211020	LC012180337	LC012180338	LC015180227	LC015180228
6"	LC05326601	LC07326601	LC20100011	LC07211019	LC012180394	LC012180395	LC015180268	LC015180269
6-1/4"					LC012180493	LC012180494	LC015180284	LC015180285
6-1/2"	LC05326651	LC07326651	LC20100012	LC07211018	LC012180535	LC012180536	LC015180300	LC015180301
6-3/4"								
7”	LC05326700	LC07326700	LC20100017	LC07211017	LC012180618	LC012180619	LC015180342	LC015180343
7-1/2”	LC05326750		LC20100019					

GASKETS		OEM	OEM URETHANE	L STYLE	L STYLE URETHANE
	VALVE COVER	LC10300011	LC07211021	LC07207129	LC07211007
	CYLINDER HEAD				
	WEAR PLATE	LC20100008	LC07211022	LC20100008	LC07211022

DESCRIPTION	SUPREME	ROUGHNECK	ROUGHNECK HP		
VALVE (White Insert)	LC060155042	LC9700368	LC9700356		
VALVE (Urethane Insert)	LC060155041	LC9700250	LC9700354		
VALVE (Rubber)	LC060155033	LC9700293			
VALVE SEAT	LC061101507	LC9702504	LC9702504		
INSERT (Urethane)	LC062400338	LC9705228	LCPF071		
INSERT (Rubber)	LC062400239	LC9705244			
VALVE SPRING	LC055403257	LC055213417	LC055213417		
SEAT PULLER ASSEMBLY	LCM1060	LCM1060	LCM1060		
PULLER HEAD	LC181235300	LC8401985	LC8401985		

Model	CROSSHEAD ROD	SELF ALIGNING ROD ASSEMBLY	PONY ROD BAFFLE	PISTON ROD	SUB ROD	STUD	PISTON ROD NUT
A-1400-PT & A-1700-PT	LC10300142		LC20460669	LC20150123	LC20150125	LC10305203	LC005402052
	CLAMP ASSEMBLY	Pony Rod Seal					
	LC80701021	LC20100015					

Copyright © [OLEC ETS]. All rights reserved.

EMSCO			F-350,F-500,F-650					6-3/4*7,6-3/4*7-1/2,6-3/4*8
	LINERS		LINER GASKETS		PISTONS		PISTON REPLACEMENT RUBBERS	
SIZE	SUPREME	CERAMIC	RUBBER	URETHANE	SUPREME	WHITE LIGHTNING	SUPREME	WHITE LIGHTNING
4"	LC05414400	LC07414400	LC07918281		LC012180113		LC015180102	
4-1/2"	LC05414450	LC07414450	LC07918281		LC012180154		LC015180144	
5"	LC05414500	LC07414500	LC07918281		LC012180279		LC015180185	
5-1/2"	LC05414550	LC07414550	LC07918281		LC012180303		LC015180227	
6"	LC05414600	LC07414600	LC07918281		LC012180295		LC015180268	
6-1/4"	LC05414625	LC07414625	LC07918281					
6-1/2"	LC05414650	LC07414650	LC07918281		LC012180451		LC015180300	
6-3/4"	LC05414675	LC07414675	LC07918281					

GASKETS		OEM	OEM URETHANE	L STYLE	L STYLE URETHANE
	VALVE COVER	LC07916733			
	CYLINDER HEAD	LC07918281			
	WEAR PLATE				

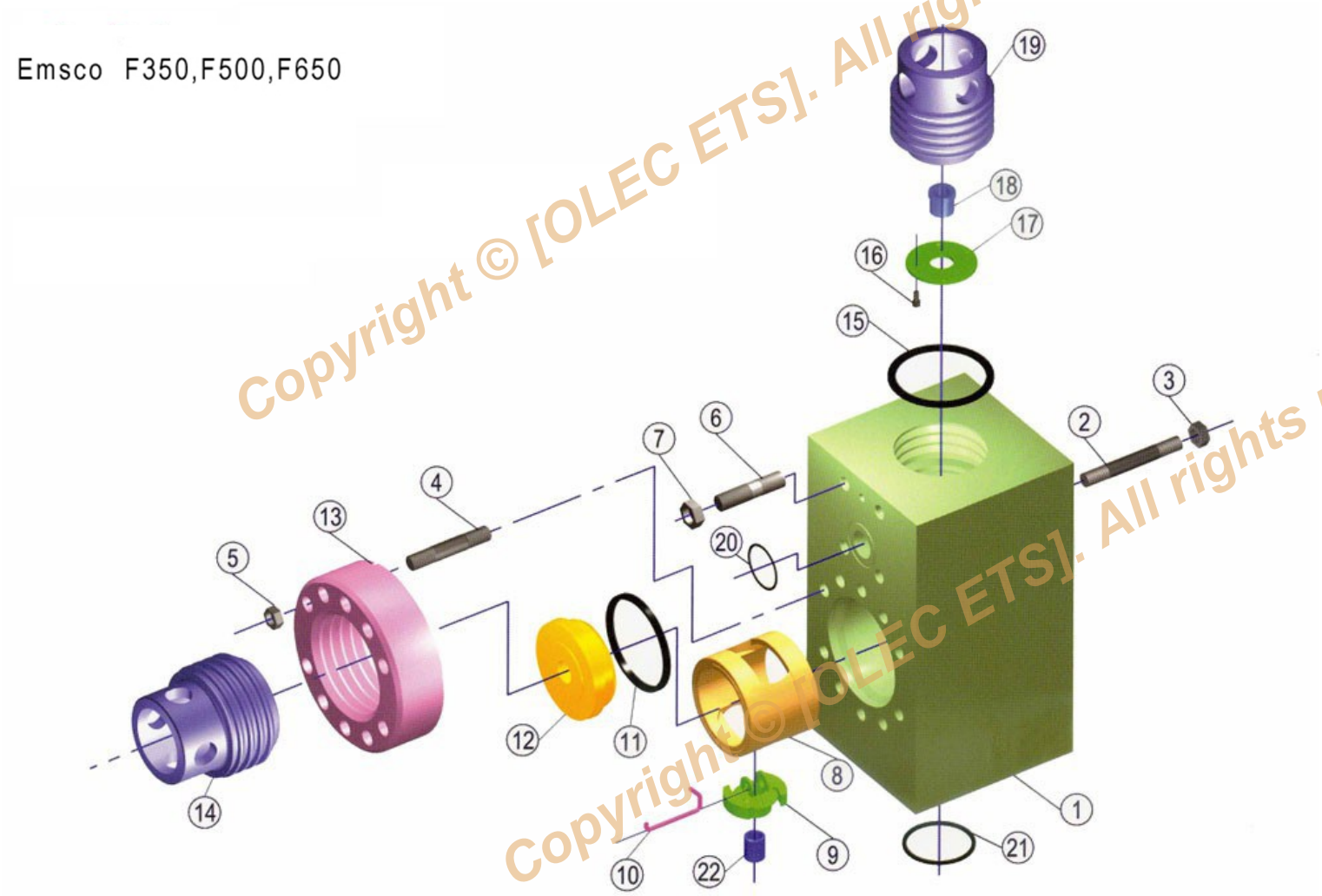

Copyright © [OLEC ETS]. All rights reserved.

CONTINENTAL EMSCO F-350, F-500, F-650 / BOMCO F-500 / WEATHERFORD MP-5

FLUID END MODULE & ACCESSORIES

ITEM #	OEM PART #	DESCRIPTION	QTY PER PUMP
1		ASSY, COMPLETE FLUID END MODULE (INCLUDES ITEMS 1-22)	3
1A	6318-0151-00	MODULE, STUDDED FLUID END (INCLUDES ITEMS 1A-7)	3
2	7507-2207-00	STUD, POWER FRAME	18
3	7601-0630-17	NUT, POWER FRAME STUD	18
4	7507-3402-00	STUD, THREADED RING	36
5	7601-0630-26	NUT, THREADED RING STUD	36
6	7507-3407-00	STUD, DISCHARGE MANIFOLD	12
7	7601-0630-26	NUT, DISCHARGE MANIFOLD STUD	12
8	6318-0148-00	CAGE, LINER	3
9	6318-0177-00	GUIDE, LOWER VALVE (INCLUDES ITEM #22, BUSHING)	3
10	6318-0153-00	CLIP, LOCKING (FOR LOWER VALVE GUIDE)	3
11	LC7918281	GASKET, LINER - RUBBER (SEE DATASHEET FOR ALTERNATE MATERIALS)	6
12	6318-0158-00	PLUG, CYLINDER HEAD	3
13	6318-0130-00	RING, THREADED CYLINDER HEAD	3
14	6318-0157-00	CAP, THREADED CYLINDER HEAD	3
15	LC7916733	GASKET, VALVE COVER - RUBBER (SEE DATASHEET FOR ALTERNATE MATERIALS)	3
16	7501-0051-00	SCREW, RETAINER (UPPER)	12
17	6397-0603-00	RETAINER PLATE (UPPER)	3
18	6397-0602-00	GUIDE, UPPER VALVE	3
19	6310-0016-02	COVER, VALVE POT	3
20	7602-1600-23	GASKET, DISCHARGE MANIFOLD	3
21	7602-1600-38	GASKET, SUCTION MANIFOLD	3
22	6318-0155-00	BUSHING, LOWER VALVE GUIDE	3

DESCRIPTION	SUPREME	ROUGHNECK	ROUGHNECK HP		
VALVE (Urethane Insert)	LC060152907	LC9700200			
VALVE (Rubber)	LC060122801				
VALVE SEAT	LC061102703	LC080120207			
INSERT (Urethane)	LC062400080	LC9705066			
INSERT (Rubber)	LC062400072				
VALVE SPRING	LC055413389	LC8201650			
SEAT PULLER ASSEMBLY	LCM1100	LCM1100			
PULLER HEAD	LC181240508	LC181234501			

Model	CROSSHEAD ROD	SELF ALIGNING ROD ASSEMBLY	PONY ROD BAFFLE	PISTON ROD	PISTON ROD NUT	CLAMP ASSEMBLY	PONY ROD SEAL
F-350	LC07913702			LC1551490	LC7403224	LCPP600500	
F-500 1"	LC07913702			LC1551700	LC7403224	LCPP600500	7602-2130-35
F-500 1-1/2"	LC07913702			LC07913091	LC005402052	LCPP600500	7602-2132-72
F-650	LC6310007800			LC1551698	LC005402052	LCPP600750	

Copyright © [OLEC ETS]. All rights reserved.

EMSCO			F-800,F-1000					6-3/4*9,6-3/4*10
	LINERS		LINER GASKETS		PISTONS		PISTON REPLACEMENT RUBBERS	
SIZE	SUPREME	CERAMIC	RUBBER	URETHANE	SUPREME	WHITE LIGHTNING	SUPREME	WHITE LIGHTNING
4"					LC012180170		LC015180102	
4-1/2"	LC05495450	LC07494450	LC07918282		LC012180196	LC012180197	LC015180144	LC015180145
5"	LC05495500	LC07494500	LC07918282		LC012180253	LC012180254	LC015180185	LC015180186
5-1/2"	LC05495550	LC07494550	LC07918282		LC012180337	LC012180338	LC015180227	LC015180228
6"	LC05495600	LC07494600	LC07918282		LC012180394	LC012180395	LC015180268	LC015180269
6-1/4"	LC05495625		LC07918282		LC012180493	LC012180494	LC015180284	LC015180285
6-1/2"	LC05495650	LC07459650	LC07918282		LC012180535	LC012180536	LC015180300	LC015180301
6-3/4"	LC05495675H							
7”					LC012180618	LC012180619	LC015180342	LC015180343

GASKETS		OEM	OEM URETHANE	L STYLE	L STYLE URETHANE
	VALVE COVER	LC07916740		LC07207129	LC07211007
	CYLINDER HEAD	LC07918282			
	WEAR PLATE			LC1290344	LC07211023

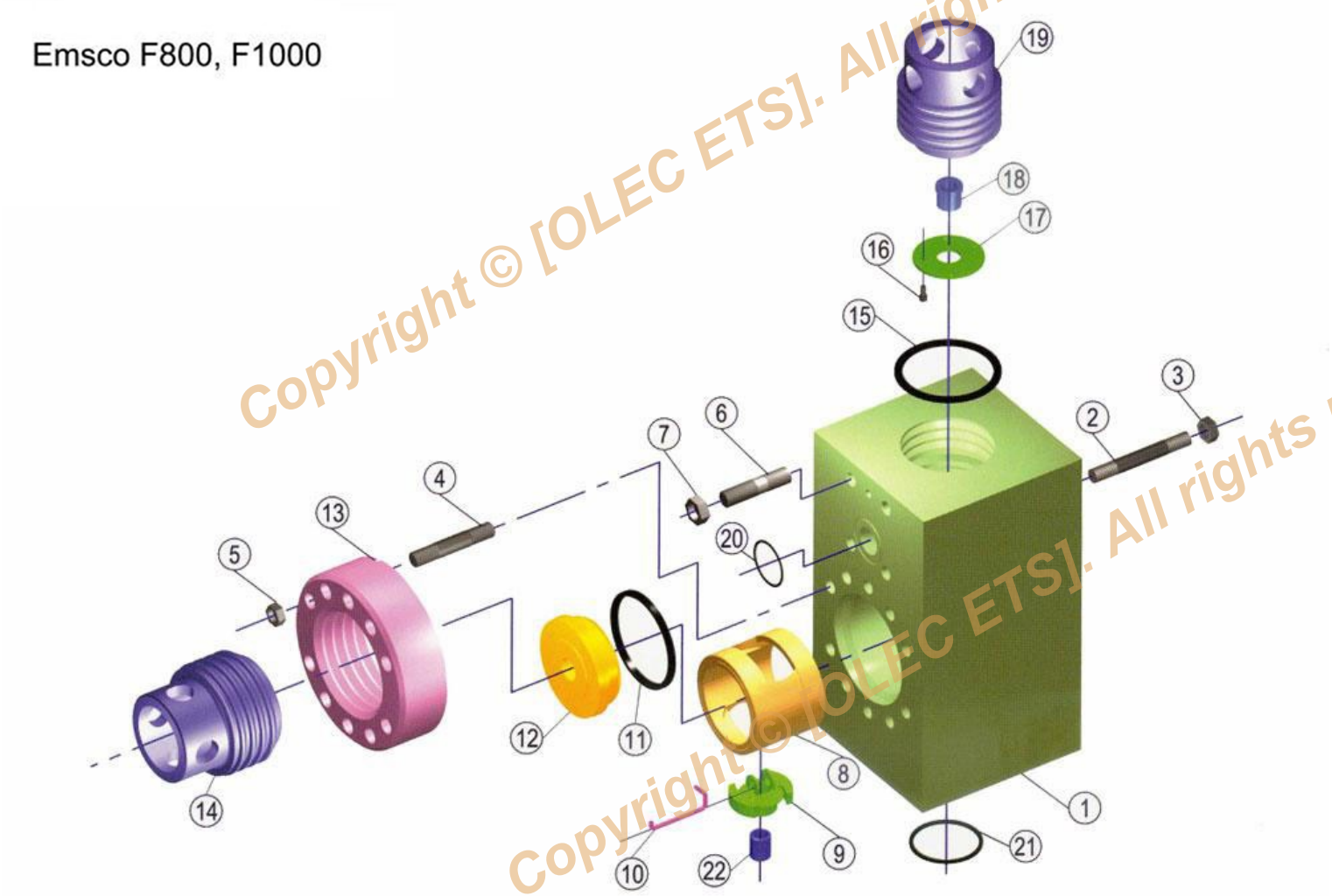

Copyright © [OLEC ETS]. All rights reserved.

CONTINENTAL EMSCO F-800, F-1000

FLUID END MODULE & ACCESSORIES

ITEM #	OEM PART #	DESCRIPTION	QTY PER PUMP
1	EMSFEMF1000 CA	ASSY, COMPLETE FLUID END MODULE (INCLUDES ITEMS 1A-22)	3
1A	6999-0086-02	MODULE, STUDDED FLUID END (INCLUDES ITEMS 1A-7)	3
1B	LC80723010	MODULE, STUDDED FLUID END MADE FROM 4135 MATERIAL(INCLUDES ITEMS 1B-7)	
2	7507-2205-00	STUD, POWER FRAME	18
3	7601-0630-17	NUT, POWER FRAME STUD	18
4	7507-2150-00	STUD, THREADED RING	30
5	7601-0630-28	NUT, THREADED RING STUD	30
6	7507-2108-00	STUD, DISCHARGE MANIFOLD	12
7	7601-0630-24	NUT, DISCHARGE MANIFOLD STUD	12
8	6319-0026-00	CAGE, LINER	3
9	6319-0087-00	GUIDE, LOWER VALVE (WITH BUSHING)	3
10	6319-0089-00	CLIP, LOCKING (FOR LOWER VALVE GUIDE)	3
11	7602-2200-32	GASKET, LINER - RUBBER (SEE DATASHEET FOR ALTERNATE MATERIALS)	6
12	6319-0031-00	PLUG, CYLINDER HEAD	3
13	6999-0089-00	RING, THREADED CYLINDER HEAD	3
14	6319-0090-00	CAP, THREADED CYLINDER HEAD	3
15	LC7916740	GASKET, VALVE COVER - RUBBER (SEE DATASHEET FOR ALTERNATE MATERIALS)	3
16	7501-0051-00	SCREW, RETAINER (UPPER)	12
17	6397-0603-00	RETAINER PLATE (UPPER)	3
18	6397-0575-00	GUIDE, UPPER VALVE	3
19	6319-0027-00	COVER, VALVE POT	3
20	7602-1610-46	GASKET, DISCHARGE MANIFOLD	3
21	7602-1600-61	GASKET, SUCTION MANIFOLD	3
22	6316-0096-00	BUSHING, LOWER VALVE GUIDE	3
23	7601-0336-00	CAPSCREW, SUCTION MANIFOLD - NOT SHOWN	

DESCRIPTION	SUPREME	ROUGHNECK	ROUGHNECK HP		
VALVE (White Insert)	LC060152809	LC9700367	LC9700359		
VALVE (Urethane Insert)	LC060152808	LC9700285	LC9700353		
VALVE (Rubber)	LC060122702	LC9702601			
VALVE SEAT	LC061102653	LC9702547	LC9702547		
INSERT (Urethane)	LC062400106	LC9705090	LC9700363		
INSERT (Rubber)	LC062400056	LC9705155			
VALVE SPRING	LC055413389	LC8201650	LC8201650		
SEAT PULLER ASSEMBLY	LCM1060	LCM1060	LCM1060		
PULLER HEAD	LC181235052	LC8401977	LC8401977		

Model	CROSSHEAD ROD	SELF ALIGNING ROD ASSEMBLY	PONY ROD BAFFLE	PISTON ROD	PISTON ROD NUT	CLAMP ASSEM-BLY	Pony Rod Seal
F-800	LC07913075		LC07208500	LC1551701	LC005402052	LCPP600800	7602-2131-97
F-1000	LC07913070		LC07208501	LC1551702	LC005402052	LCPP601000	7602-2132-05

Copyright © [OLEC ETS]. All rights reserved.

BOMCO			F-1300,F-1600					7*12
	LINERS		LINER GASKETS		PISTONS		PISTON REPLACEMENT RUBBERS	
SIZE	SUPREME	CERAMIC	RUBBER	URETHANE	SUPREME	WHITE LIGHTNING	SUPREME	WHITE LIGHTNING
4"	LC05499400	LC07499400	LC07916800	LC07211001	LC012180170		LC015180102	
4-1/2"	LC05499450	LC07499450	LC07916800	LC07211001	LC012180196	LC012180197	LC015180144	LC015180145
5"	LC05499500*	LC07499500	LC07916800	LC07211001	LC012180253	LC012180254	LC015180185	LC015180186
5-1/2"	LC05499550*	LC07499550	LC07916800	LC07211001	LC012180337	LC012180338	LC015180227	LC015180228
6"	LC05499600*	LC07499600	LC07916800	LC07211001	LC012180394	LC012180395	LC015180268	LC015180269
6-1/4"	LC05499625*	LC07499625	LC07916800	LC07211001	LC012180493	LC012180494	LC015180284	LC015180285
6-1/2"	LC05499650*	LC07499650	LC07916800	LC07211001	LC012180535	LC012180536	LC015180300	LC015180301
6-3/4"	LC05495675*	LC07495675	LC07916800	LC07211001				
7”	LC05495700*	LC07495700	LC07916800	LC07211001	LC012180618	LC012180619	LC015180342	LC015180343

GASKETS		OEM	OEM URETHANE	L STYLE	L STYLE URETHANE
	VALVE COVER	LC07916741	LC07211006		
	CYLINDER HEAD	LC6308015	LC07916801		
	WEAR PLATE	LC07916800	LC07211001		

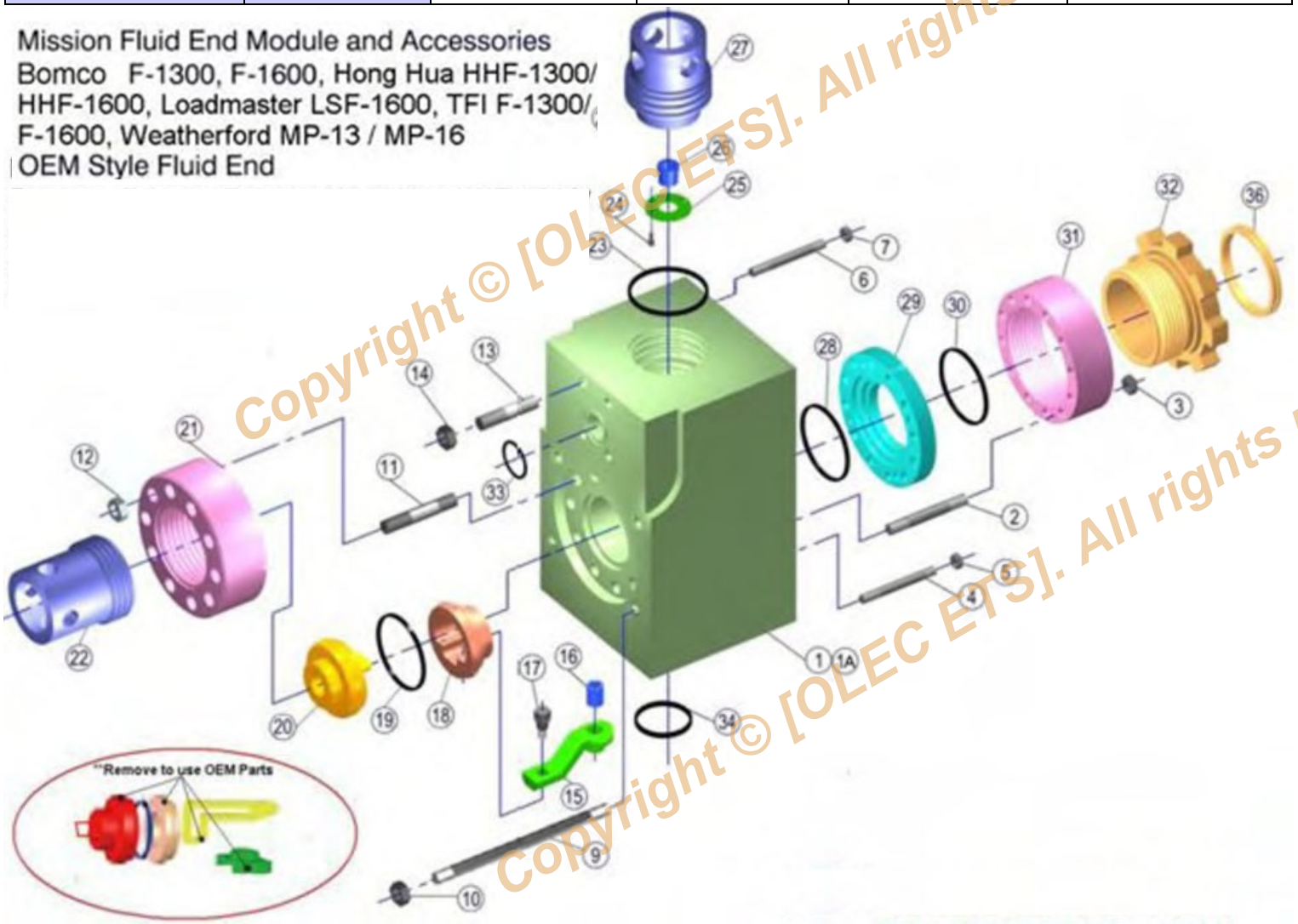

Copyright © [OLEC ETS]. All rights reserved.

BOMCO F-1300/F-1600, LOADMASTER LSF-1600, Weatherford MP-13/MP-16,HONG HUA 3NB1300F

FLUID END MODULE & ACCESSORIES

ITEM	OEM PART #	HH3NB1300F PART	DESCRIPTION	QTY PER PUMP
1	AH36002-05.01.00A	11-3161-0501-00	MODULE, STUDDED FLUID END (ITEMS 1-14)	3
2	T50-5005	11-3161-0501-02	STUD, LINER THREADED RING	36
3	AH36002-05.01.02	11-3161-0501-03	NUT, LINER THREADED RING STUD	36
4&6	T50-5007	11-3161-0501-05	STUD, POWER FRAME	30
5&7	T51-2001	11-3161-0501-06	NUT, POWER FRAME STUD	30
8		11-3161-0540	WASHER, LOCK TOP POWER FRAME STUD 1-1/2"	12
9		11-3161-0537	STUD, THROUGH MODULE POWER FRAME 1-1/2-? X ?	12
10		11-3161-0501-06	NUT, THROUGH MODULE POWER FRAME STUD	12
11	T50-5006	11-3161-0501-04	STUD, CYLINDER HEAD THREADED RING	30
12	T51-2001	11-3161-0501-06	NUT, CYLINDER HEAD THREADED RING STUD	30
13	T50-5008	11-3161-0501-07	STUD, DISCHARGE MANIFOLD	12
14	T51-2002	11-3161-0501-08	NUT, DISCHARGE MANIFOLD STUD	12
15**	AH36001-05A.05.00	11-3161-0505-00	GUIDE, LOWER VALVE (WITH BUSHING)	3
16**	AH36001-05A.05.02A		BUSHING, LOWER VALVE GUIDE	3
17**	AH36001-05A.04.00	11-3161-0504-00	LOCKBOLT, LOWER VALVE GUIDE	3
18**	AH36001-05A.07	11-3161-0507	ALIGNMENT RING	3
19	AH36001-05.08	11-3161-0508	GASKET, HEAD SEAL	3
20**	AH36001-05A.06.00	11-3161-0506-00	PLUG, CYLINDER HEAD	3
21	AH36001-05.02	11-3161-0502	RING, THREADED CYLINDER HEAD	3
22	AH36001-05.03	11-3161-0503	CAP, THREADED CYLINDER HEAD	3
23	AH36001-05.13	11-3161-0512	GASKET, VALVE COVER - RUBBER (SEE DATASHEET FOR ALTERNATE MATERIALS)	3
24	AH33001-05.15A	11-3161-0530	SCREW, RETAINER UPPER)	12
25	AH33001-05.14	11-3161-0529	PLATE, RETAINER (UPPER)	3
26	AH33001-05.12	11-3161-0527	GUIDE, UPPER VALVE	3
27	AH36002-05.02	11-3161-0513	COVER, VALVE POT	3
28	AH36001-05.15	11-3161-0514	GASKET, WEAR PLATE - RUBBER (SEE DATASHEET FOR ALTERNATE MATERIALS)	3
29	AH36002-05.03	11-3161-0515	PLATE, WEAR	3
30	AH36001-05.15	11-3161-0514	GASKET, LINER - RUBBER (SEE DATASHEET FOR AL-TERNATE MATERIALS)	3
31	AH36001-05.17	11-3161-0516	RING, LINER THREADED	3
32	AH36001-05.18.00	11-3161-0517-00	LINER LOCK	3
33	GB3452.1-82	B34521-095-530-69	GASKET, DISCHARGE MANIFOLD φ95*5.3	3
34	GB3452.1-82	B34521-190-700-69	GASKET, SUCTION MANIFOLD φ200*7	3
35		11-3161-0542	SUCTION MANIFOLD CAPSCREW (NOT SHOWN)	18

DESCRIPTION	SUPREME	ROUGHNECK	ROUGHNECK HP		
VALVE (White Insert)	LC060155042	LC9700368	LC9700356		
VALVE (Urethane Insert)	LC060155041	LC9700250	LC9700354		
VALVE (Rubber)	LC060155033	LC9700293			
VALVE SEAT	LC061101507	LC9702504	LC9702504		
INSERT (Urethane)	LC062400338	LC9705228	LCPF071		
INSERT (Rubber)	LC062400239	LC9705244			
VALVE SPRING	LC055403257	LC055213417	LC055213417		
SEAT PULLER ASSEMBLY	LCM1060	LCM1060	LCM1060		
PULLER HEAD	LC181235300	LC8401985	LC8401985		

Model	CROSSHEAD ROD	SELF ALIGNING ROD ASSEMBLY	PONY ROD BAFFLE	PISTON ROD	SUB ROD	PISTON ROD NUT	CLAMP ASSEMBLY	Pony Rod Seal
F-1300/1600 1Piece	LC07913077		LC07208502	LC1551703		LC005402052	LC80701023	7602-2131-47
F-1300/1600 2Piece	LC07913077	LC2095002	LC07208502	LCHT204A	LCHT2145B	LC005402052	LC80701023	7602-2132-76

Copyright © [OLEC ETS]. All rights reserved.

OLEC Engineering technology services

OLEC ETS

olecets.com sales@olecets.com +33 786843374

EMSCO			FB-1300,FB-1600					7*12
	LINERS		LINER GASKETS		PISTONS		PISTON REPLACEMENT RUBBERS	
SIZE	SUPREME	CERAMIC	RUBBER	URETHANE	SUPREME	WHITE LIGHTNING	SUPREME	WHITE LIGHTNING
4"	LC05499400	LC07499400	LC07916800	LC07211001	LC012180170		LC015180102	
4-1/2"	LC05499450	LC07499450	LC07916800	LC07211001	LC012180196	LC012180197	LC015180144	LC015180145
5"	LC05499500*	LC07499500	LC07916800	LC07211001	LC012180253	LC012180254	LC015180185	LC015180186
5-1/2"	LC05499550*	LC07499550	LC07916800	LC07211001	LC012180337	LC012180338	LC015180227	LC015180228
6"	LC05499600*	LC07499600	LC07916800	LC07211001	LC012180394	LC012180395	LC015180268	LC015180269
6-1/4"	LC05499625*	LC07499625	LC07916800	LC07211001	LC012180493	LC012180494	LC015180284	LC015180285
6-1/2"	LC05499650*	LC07499650	LC07916800	LC07211001	LC012180535	LC012180536	LC015180300	LC015180301
6-3/4"	LC05495675*	LC07495675	LC07916800	LC07211001				
7”	LC05495700*	LC07495700	LC07916800	LC07211001	LC012180618	LC012180619	LC015180342	LC015180343

GASKETS		OEM	OEM URETHANE	L STYLE	L STYLE URETHANE
	VALVE COVER	LC07916741	LC07211006	LC07207129	LC07213007
	CYLINDER HEAD	LC6308015	LC07916801		
	WEAR PLATE	LC07916800	LC07211001	LC1290344	LC07211023

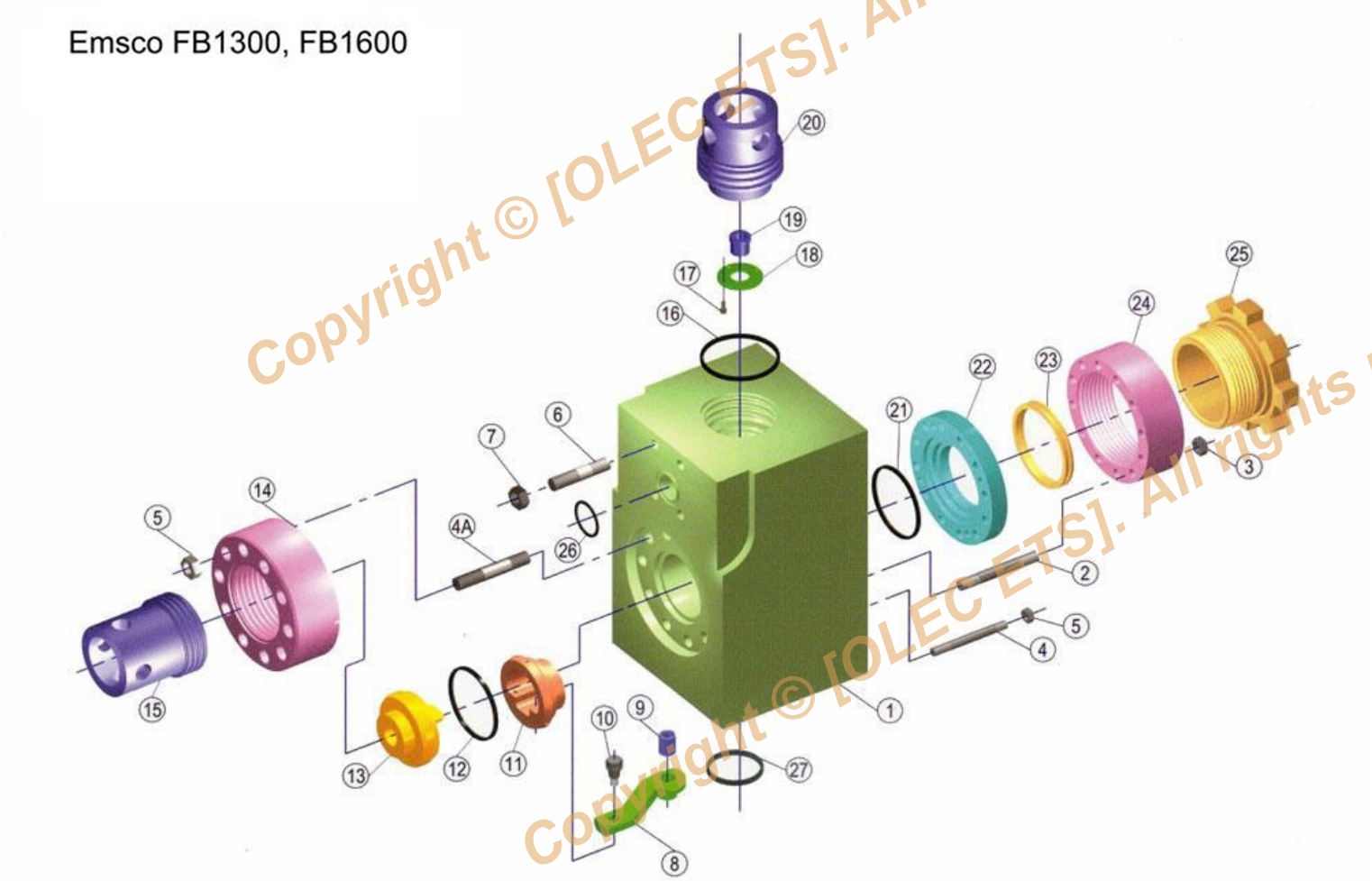

Copyright © [OLEC ETS]. All rights reserved.

CONTINENTAL EMSCO FB-1300, FB-1600

FLUID END MODULE & ACCESSORIES

ITEM #	OEM PART #	DESCRIPTION	QTY PER PUMP
-		ASSY, COMPLETE FLUID END (INCLUDES MANIFOLDS)	1
1A	6316-0357-00	ASSY, COMPLETE FLUID END MODULE (ITEMS 1-7)	3
1	6316-0356-00	MODULE, ONLY FLUID END	3
2	7507-2013-00	STUD, LINER THREADED RING	36
3	LC6300160	NUT, LINER THREADED RING STUD	36
4	7507-2201-00	STUD, POWER FRAME	18
5	7601-0630-17	NUT, POWER FRAME STUD	18
4A	7507-2210-00	STUD, CYLINDER HEAD THREADED RING	30
5	7601-0630-17	NUT, CYLINDER HEAD THREADED RING STUD	30
6	7507-2108-00	STUD, DISCHARGE MANIFOLD	12
7	7601-0630-24	NUT, DISCHARGE MANIFOLD STUD	12
8	6316-0354-00	GUIDE, LOWER VALVE (WITH BUSHING)	3
9	6316-0096-00	BUSHING, LOWER VALVE GUIDE	3
10	6316-0360-00	LOCKBOLT, LOWER VALVE GUIDE	3
11	6316-0363-00	ALIGNMENT RING	3
12	6316-0369-00	GASKET, HEAD SEAL	3
13	6316-0364-90	PLUG, CYLINDER HEAD	3
14	6316-0361-00	RING, THREADED CYLINDER HEAD	3
15	6316-0362-90	CAP, THREADED CYLINDER HEAD	3
16	6316-0092-00	GASKET, VALVE COVER - RUBBER (SEE DATASHEET FOR ALTERNATE MATERIALS)	3
17	7501-0051-00	SCREW, RETAINER UPPER)	12
18	6397-0603-00	PLATE, RETAINER (UPPER)	3
19	6397-0575-00	GUIDE, UPPER VALVE	3
20	6316-0039-90	COVER, VALVE POT	3
21	6316-0373-00	GASKET, WEAR PLATE - RUBBER (SEE DATASHEET FOR ALTERNATE MATERIALS)	3
22	6316-0365-00	PLATE, WEAR	3
23	6316-0373-00	GASKET, LINER - RUBBER (SEE DATASHEET FOR ALTERNATE MATERIALS)	3
24	6316-0366-00	RING, LINER THREADED	3
25	6316-0367-20	LINER LOCK	3
26	7602-1600-25	GASKET, DISCHARGE MANIFOLD	3
27	7602-1600-61	GASKET, SUCTION MANIFOLD	3
28	7601-0333-30	SUCTION MANIFOLD CAPSCREW (NOT SHOWN)	18

DESCRIPTION	SUPREME	ROUGHNECK	ROUGHNECK HP		
VALVE (White Insert)	LC060155042	LC9700368	LC9700356		
VALVE (Urethane Insert)	LC060155041	LC9700250	LC9700354		
VALVE (Rubber)	LC060155033	LC9700293			
VALVE SEAT	LC061101507	LC9702504	LC9702504		
INSERT (Urethane)	LC062400338	LC9705228	LCPF071		
INSERT (Rubber)	LC062400239	LC9705244			
VALVE SPRING	LC055403257	LC055213417	LC055213417		
SEAT PULLER ASSEMBLY	LCM1060	LCM1060	LCM1060		
PULLER HEAD	LC181235300	LC8401985	LC8401985		

Model	CROSSHEAD ROD	SELF ALIGNING ROD ASSEMBLY	PONY ROD BAFFLE	PISTON ROD	SUB ROD	PISTON ROD NUT	CLAMP ASSEMBLY	Pony Rod Seal
FB-1300 FB-1600 1Piece	LC07913077		LC07208502	LC1551703		LC005402052	LC80701027	7602-2131-47
FB-1300 FB-1600 2Piece	LC07913077	LC2095002	LC07208502	LCHT204A	LCHT2145B	LC005402052	LC80701027	7602-2132-76
	STUD	LC10305203NH						

Copyright © [OLEC ETS]. All rights reserved.

FB-1300 & FB-1600 "L" SHAPED			
Item	Part No.	Description	Qty per Pump
	LC-8490-2A	Complete Assembly	(3)
	LC-8490-1	Fluid Module, Discharge - Studded (included Items 1-5)	(3)
1		Fluid Module - Discharge	3
2	LC-4016-9	Stud w/Nut - Frame	30
3	LC-4017-97	Stud w/Nut - Suction Module	18
4	LC-4017-46	Stud w/Nut - Discharge Manifold	12
5	LC-4015-2	Stud w/Nut - Valve Cover	72
	LC-8490-2	Fluid Module, Suction - Studded (included items 5-6)	(3)
6		Fluid Module - Suction	3
7	LC-7602-1600-61	Seal - Suction Manifold	3
8	LC-8488-5	Dowel Pin	6
9	LC-4475	Threaded Flange	6
10	LC-4575	Screw Gland	6
	LC-4675-2A	Valve Cover Plug Assembly (included items 11-14)	
11	LC-4675-2	Plug - Valve Cover	6
12	LC-4775-2	Valve Guide	6
13	LC-4016-99	Stud w/Nut - Valve Guide	16
14	LC-4700-I	Insert - Valve Guide	6
15	LC-P129	Seal - Valve Cover Plug	6
16	LC-6490-3	Liner Retainer Flange	3
17	LC-4017-36	Capscrew - Liner Retainer	24
18	LC-6590-1	Nut - Liner Retainer	3
19	LC-8422-3	Pilot Ring - Liner Retainer	3
20	LC-8490-3	Plate - Wear	3
21	LC-2988	Seal - Module and Wear Plate	6
22	LC-7602-1600-25	Seal - Discharge Manifold	3

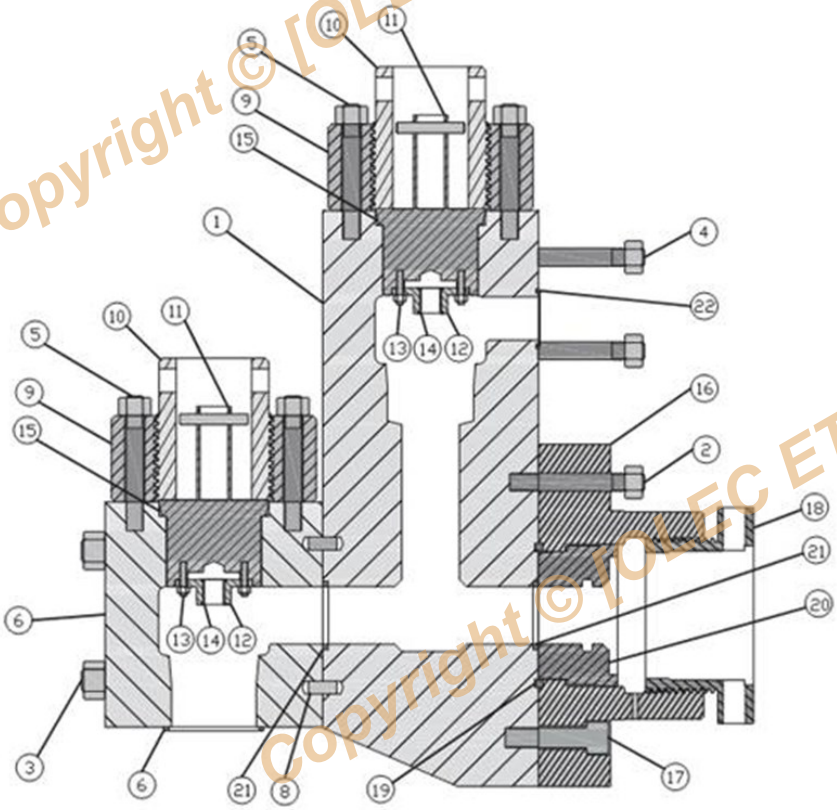

Copyright © [OLEC ETS]. All rights reserved.

Honghua HHF-1300 /HHF-1600

FLUID END MODULE & ACCESSORIES

ITEM	HHF1300/1600 PART No.	DESCRIPTION	QTY PER PUMP
1	11-3161-0501-00	MODULE, STUDDED FLUID END (ITEMS 1-14)	3
2	11-3161-0501-02	STUD, LINER THREADED RING	36
3	11-3161-0501-03	NUT, LINER THREADED RING STUD	36
4&6	11-3161-0501-05	STUD, POWER FRAME	30
5&7	11-3161-0501-06	NUT, POWER FRAME STUD	30
8	11-3161-0540	WASHER, LOCK TOP POWER FRAME STUD 1-1/2"	12
9	11-3161-0537	STUD, THROUGH MODULE POWER FRAME 1-1/2-? X ?	12
10	11-3161-0501-06	NUT, THROUGH MODULE POWER FRAME STUD	12
11	11-3161-0501-04	STUD, CYLINDER HEAD THREADED RING	30
12	11-3161-0501-06	NUT, CYLINDER HEAD THREADED RING STUD	30
13	11-3161-0501-07	STUD, DISCHARGE MANIFOLD	12
14	11-3161-0501-08	NUT, DISCHARGE MANIFOLD STUD	12
15**	11-3161-0505-00	GUIDE, LOWER VALVE (WITH BUSHING)	3
16**		BUSHING, LOWER VALVE GUIDE	3
17**	11-3161-0504-00	LOCKBOLT, LOWER VALVE GUIDE	3
18**	11-3161-0507	ALIGNMENT RING	3
19	11-3161-0508	GASKET, HEAD SEAL	3
20**	11-3161-0506-00	PLUG, CYLINDER HEAD	3
21	11-3161-0502	RING, THREADED CYLINDER HEAD	3
22	11-3161-0503	CAP, THREADED CYLINDER HEAD	3
23	11-3161-0512	GASKET, VALVE COVER - RUBBER (SEE DATASHEET FOR ALTERNATE MATERIALS)	3
24	11-3161-0530	SCREW, RETAINER UPPER)	12
25	11-3161-0529	PLATE, RETAINER (UPPER)	3
26	11-3161-0527	GUIDE, UPPER VALVE	3
27	11-3161-0513	COVER, VALVE POT	3
28	11-3161-0514	GASKET, WEAR PLATE - RUBBER (SEE DATASHEET FOR ALTERNATE MATERIALS)	3
29	11-3161-0515	PLATE, WEAR	3
30	11-3161-0514	GASKET, LINER - RUBBER (SEE DATASHEET FOR ALTERNATE MATERIALS)	3
31	11-3161-0516	RING, LINER THREADED	3
32	11-3161-0517-00	LINER LOCK	3
33	B34521-095-530-69	GASKET, DISCHARGE MANIFOLD φ95*5.3	3
34	B34521-190-700-69	GASKET, SUCTION MANIFOLD φ200*7	3
35	11-3161-0542	SUCTION MANIFOLD CAPSCREW (NOT SHOWN)	18

DESCRIPTION	SUPREME	ROUGHNECK	ROUGHNECK HP		
VALVE (White Insert)	LC060155042	LC9700368	LC9700356		
VALVE (Urethane Insert)	LC060155041	LC9700250	LC9700354		
VALVE (Rubber)	LC060155033	LC9700293			
VALVE SEAT	LC061101507	LC9702504	LC9702504		
INSERT (Urethane)	LC062400338	LC9705228	LCPF071		
INSERT (Rubber)	LC062400239	LC9705244			
VALVE SPRING	LC055403257	LC055213417	LC055213417		
SEAT PULLER ASSEMBLY	LCM1060	LCM1060	LCM1060		
PULLER HEAD	LC181235300	LC8401985	LC8401985		

Model	CROSSHEAD ROD	SELF ALIGNING ROD ASSEMBLY	PONY ROD BAFFLE	PISTON ROD	SUB ROD	PISTON ROD NUT	CLAMP ASSEMBLY	Pony Rod Seal
F-1300/1600 1Piece	LC07913077		LC07208502	LC1551703		LC005402052	LC80701023	7602-2131-47
F-1300/1600 2Piece	LC07913077	LC2095002	LC07208502	LCHT204A	LCHT2145B	LC005402052	LC80701023	7602-2132-76

Copyright © [OLEC ETS]. All rights reserved.

HONGHUA			HHF-1300,HHF-1600					7*12
	LINERS		LINER GASKETS		PISTONS		PISTON REPLACEMENT RUBBERS	
SIZE	SUPREME	CERAMIC	RUBBER	URETHANE	SUPREME	WHITE LIGHTNING	SUPREME	WHITE LIGHTNING
4"	LC05499400	LC07499400	LC07916800	LC07211001	LC012180170		LC015180102	
4-1/2"	LC05499450	LC07499450	LC07916800	LC07211001	LC012180196	LC012180197	LC015180144	LC015180145
5"	LC05499500*	LC07499500	LC07916800	LC07211001	LC012180253	LC012180254	LC015180185	LC015180186
5-1/2"	LC05499550*	LC07499550	LC07916800	LC07211001	LC012180337	LC012180338	LC015180227	LC015180228
6"	LC05499600*	LC07499600	LC07916800	LC07211001	LC012180394	LC012180395	LC015180268	LC015180269
6-1/4"	LC05499625*	LC07499625	LC07916800	LC07211001	LC012180493	LC012180494	LC015180284	LC015180285
6-1/2"	LC05499650*	LC07499650	LC07916800	LC07211001	LC012180535	LC012180536	LC015180300	LC015180301
6-3/4"	LC05495675*	LC07495675	LC07916800	LC07211001				
7"	LC05495700*	LC07495700	LC07916800	LC07211001	LC012180618	LC012180619	LC015180342	LC015180343

GASKETS		OEM	OEM URETHANE	L STYLE	L STYLE URETHANE
	VALVE COVER	LC07916741	LC07211006		
	CYLINDER HEAD	LC6308015	LC07916801		
	WEAR PLATE	LC07916800	LC07211001		

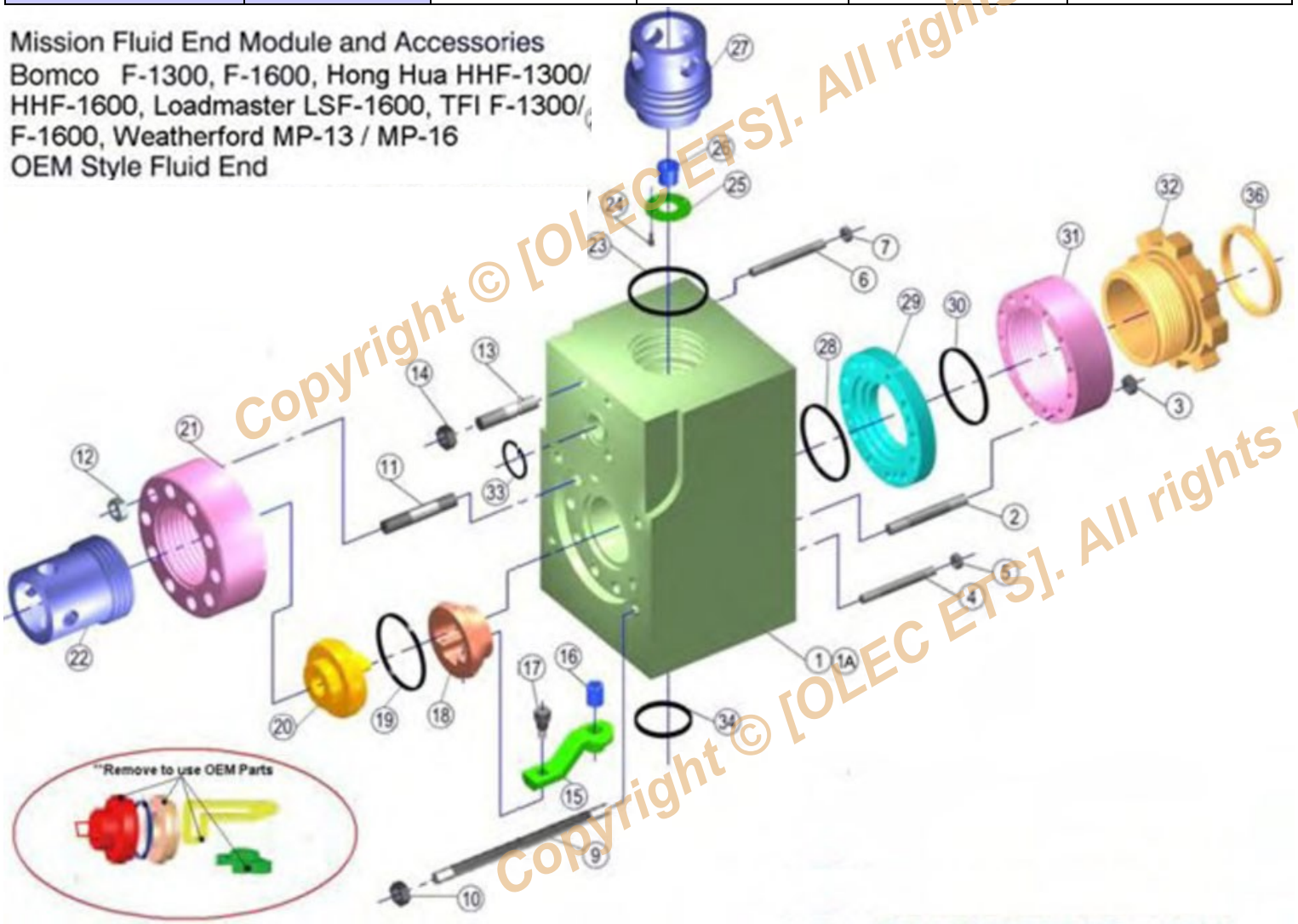

Copyright © [OLEC ETS]. All rights reserved.

GARDNER DENVER			PAH,PJ8A					5*8
	LINERS		LINER GASKETS		PISTONS		PISTON REPLACEMENT RUBBERS	
SIZE	SUPREME	INDUCTION HARDENED	RUBBER	URETHANE	SUPREME	WHITE LIGHTNING	SUPREME	WHITE LIGHTNING
4"	LC05519400	LC05445400	LC4402669		LC012180170		LC015180102	
4-1/2"	LC05445450X	LC05445450	LC4402669		LC012180196	LC012180197	LC015180144	LC015180145
5"	LC05445500X	LC05445500	LC4402669		LC012180253	LC012180254	LC015180185	LC015180186
5-1/2"								
6"								
6-1/4"								
6-1/2"								

GASKETS		OEM	OEM URETHANE	L STYLE	L STYLE URETHANE
	VALVE COVER	LC07916799	LC07916499		
	CYLINDER HEAD	LC07916799	LC07916499		
	WEAR PLATE				

Gardner Denver PAHBFB, PAHBFC

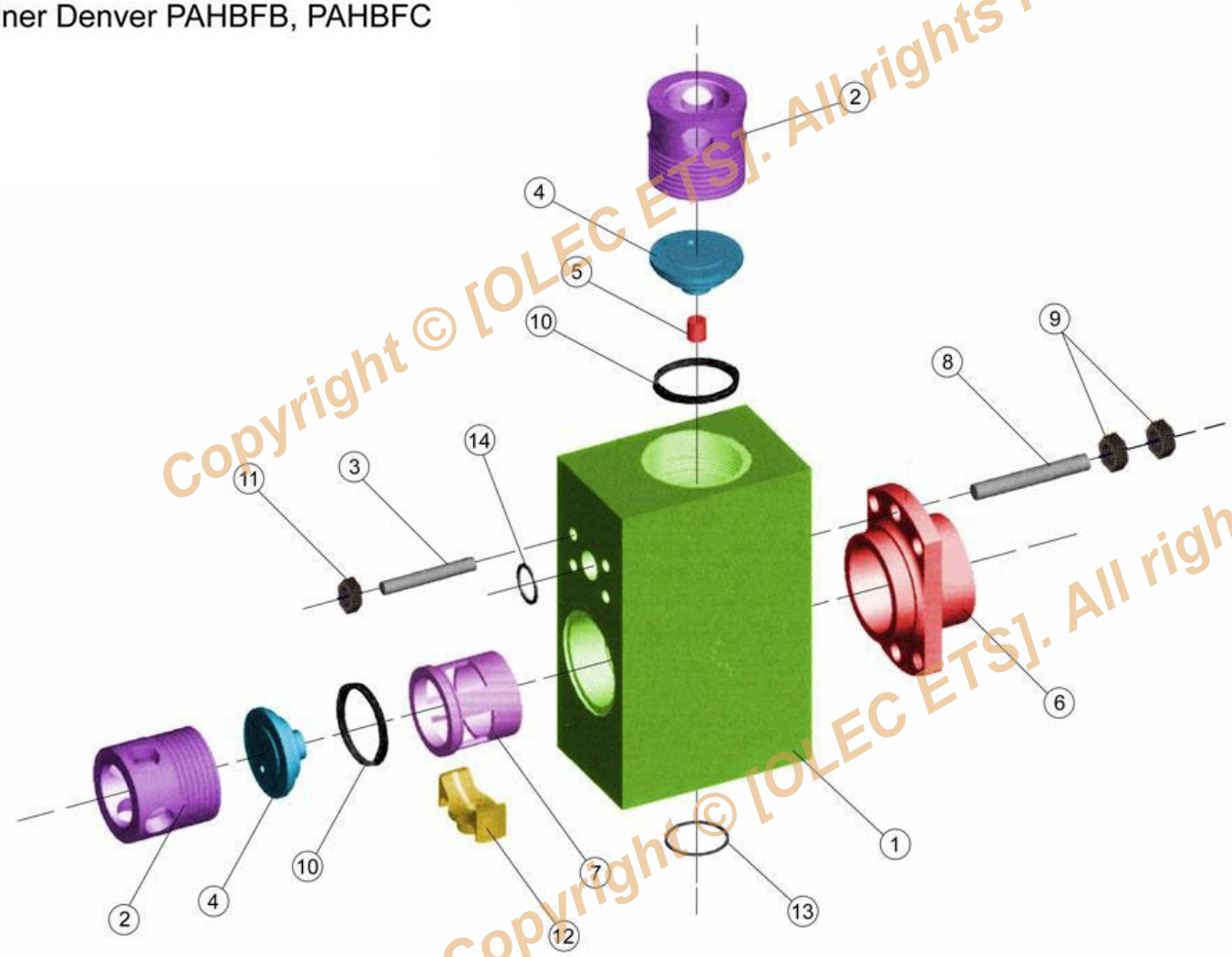

Copyright © [OLEC ETS]. All rights reserved.

GARDNER DENVER PAH

FLUID END MODULE & ACCESSORIES

ITEM	OEM PART #	DESCRIPTION	QTY PER PUMP
		ASSY, COMPLETE FLUID END MODULE	3
1	200PJH029B	MODULE, STUDDED FLUID END (ITEMS 1-5)	3
2	3PA587	CAP, THREADED (COVER LOCK)	6
3	79L142	STUD, DISCHARGE MANIFOLD	12
3a	50B9	NUT, DISCHARGE MANIFOLD STUD	12
4	200PJH147	COVER, VALVE	6
5	2013547	BUSHING, DISCHARGE VALVE GUIDE	3
6	1PA217	CLAMP, LINER	3
7	200PJH205	RETAINER, SUCTION VALVE GUIDE	3
8	79AJ2	STUD, LINER CLAMP / POWER FRAME	18
9	50B35	NUT, LINER CLAMP STUD	18
10	200PJH715	GASKET, VALVE COVER & CYL HEAD - RUBBER (SEE DATASHEET FOR ALT. MATERIALS)	6
11	50B9	NUT,MANIFOLD TO CYLINDER STUD	12
12	200PJF483	VALVE GUIDE, SUCTION	3
13	25G18	GASKET, SUCTION MANIFOLD	3
14	25AL54	GASKET, DISCHARGE MANIFOLD	3

DESCRIPTION	SUPREME	ROUGHNECK	ROUGHNECK HP	GD No.	
VALVE (White Insert)					
VALVE (Urethane Insert)	LC060152931	LC9700188		PJ482A	
VALVE (Rubber)				2005341	
VALVE SEAT	LC061103008	LC080130248		PJ451	
INSERT (Urethane)	LC062400114	LC9705040		PJ452	
INSERT (Rubber)		LC9705104		2005342	
VALVE SPRING	LC055413009	LC055413009		78H23	
SEAT PULLER ASSEMBLY	LCM1100	LCM1100			
PULLER HEAD	LC181240110	LC181235003			
LOCK NUT,VALVE				50V51	
WASHER,VALVE				PJ279	

Model	CROSSHEAD ROD	SELF ALIGNING ROD ASSEMBLY	PONY ROD BAFFLE	PISTON ROD	SUB ROD	PISTON ROD NUT	CLAMP ASSEMBLY	Pony Rod Seal
PAH				LC1551500		LC005402052	LCPP601022	LC07931171

Copyright © [OLEC ETS]. All rights reserved.

GARDNER DENVER			PZ-7,PZ-8,PZ-9						7*7,7*8,7*9
	PZ-7 LINERS		PZ-8 PZ-9 LINERS		LINER GAS-KETS	PISTONS		PISTON REPLACEMENT RUBBERS	
SIZE	SUPREME	CERAMIC	SUPREME	CERAMIC	RUBBER	SUPREME	WHITE LIGHTNING	SUPREME	WHITE LIGHTNING
4"	LC05493091					LC012180170		LC015180102	
4-1/2"	LC05493089		LC05493450	LC07493450	LC07916692	LC012180196	LC012180197	LC015180144	LC015180145
5"	LC05493087	LC07493087	LC05493500	LC07493500	LC07916692	LC012180253	LC012180254	LC015180185	LC015180186
5-1/2"	LC05493085	LC07493085	LC05493550	LC07493550	LC07916692	LC012180337	LC012180338	LC015180227	LC015180228
6"	LC05493083	LC07493083	LC05493600	LC07493600	LC07916692	LC012180394	LC012180395	LC015180268	LC015180269
6-1/4"			LC05493625	LC07493625	LC07916692	LC012180493	LC012180494	LC015180284	LC015180285
6-1/2"	LC05493081	LC07493081	LC05493650	LC07493650	LC07916692	LC012180535	LC012180536	LC015180300	LC015180301
6-3/4"			LC05493675		LC07916692				
7"			LC05493700		LC07916692	LC012180618	LC012180619	LC015180342	LC015180343

GASKETS		OEM	OEM URETHANE	L STYLE	L STYLE URETHANE
	VALVE COVER	LC07916749	LC07916449		
	CYLINDER HEAD	LC07916749	LC07916449		
	WEAR PLATE				

Gardner Denver PZ7, PZ8, PZ9

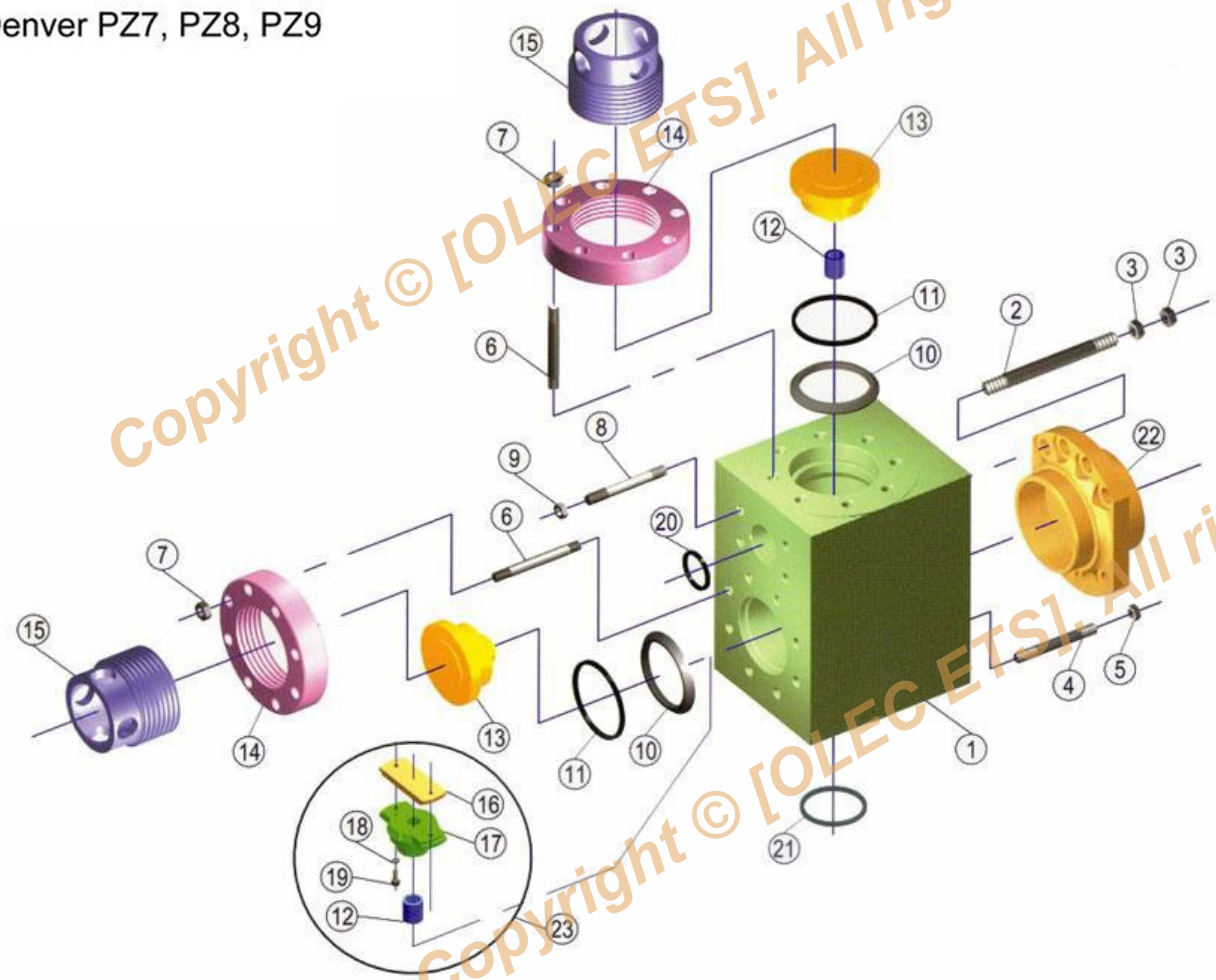

Copyright © [OLEC ETS]. All rights reserved.

ITEM #	OEM PART #	DESCRIPTION	QTY PER PUMP
		ASSY, COMPLETE FLUID END MODULE (INCLUDES ITEMS 1-22)	3
1A	200PZL029F	MODULE, STUDDED FLUID END (INCLUDES ITEMS 1A-9)	3
1B		MODULE, STUDDED FLUID END MADE FROM 4135 MATERIAL (INCLUDES ITEMS 1B-9)	
1	205PZL029D	MODULE, ONLY	3
2	79L188	STUD, FRAME & LINER CLAMP	24
3	50B36	NUT, FRAME & LINER CLAMP STUD	48
4	79L73	STUD, FRAME	12
5	50AQ30	NUT, FRAME STUD	12
6	79AL6	STUD, VALVE COVER	48
7	50B34	NUT, VALVE COVER STUD	48
8	202PZL110	STUD, DISCHARGE MANIFOLD	12
9	50B34	NUT, DISCHARGE MANIFOLD STUD	12
10	2011861	RING, VALVE COVER GASKET EXPANDER	6
11	2011862	GASKET, VALVE COVER - RUBBER (SEE DATASHEET FOR ALTERNATE MATERIALS)	6
12	2007674	BUSHING, VALVE GUIDE	6
13	2011860	COVER, VALVE	6
14	2011699	RING, VALVE COVER THREADED (2 1/2" THICK)	6
14A		RING, HEAVY VALVE COVER THREADED (3" THICK)	6
15	2011857	CAP, VALVE COVER LOCK	6
16	2011701	PLATE, RETAINER	6
17	2011700	GUIDE, LOWER VALVE SUCTION	3
18	95W2	WASHER, VALVE GUIDE LOCK	6
19	655EE06S	SCREW 1/2"x1 3/4" 316SS HX HD C/S	6
20	25AL35	GASKET, DISCHARGE MANIFOLD	3
21	25G41	GASKET, SUCTION MANIFOLD	3
22	1PV14	CLAMP, LINER	3
23	2011706	ASSY., LOWER VALVE GUIDE (INCLUDES 12, 16 -19)	3

DESCRIPTION	SUPREME	ROUGHNECK	ROUGHNECK HP	GD No.	
VALVE (White Insert)	LC060155042	LC9700368	LC9700356		
VALVE (Urethane Insert)	LC060155041	LC9700250	LC9700354	202PZL482A	
VALVE (Rubber)	LC060155033	LC9700293			
VALVE SEAT	LC061101507	LC9702504	LC9702504	202PZL039	
INSERT (Urethane)	LC062400338	LC9705228	LCPF071	201PZL106	
INSERT (Rubber)	LC062400239	LC9705244			
VALVE SPRING	LC055403257	LC055213417	LC055213417	78H44	
SEAT PULLER ASSEMBLY	LCM1060	LCM1060	LCM1060	100E12	
PULLER HEAD	LC181235300	LC8401985	LC8401985	100E13	

Model	CROSSHEAD ROD	SELF ALIGNING ROD ASSEMBLY	PONY ROD BAFFLE	PISTON ROD	SUB ROD	PISTON ROD NUT	CLAMP ASSEMBLY	Pony Rod Seal
PZ-7 CLAMP	LC07913087			LC2404427		LC005402052	LCPP601022	LC07931171
PZ-7 THREAD	LC07913063			LC1551714		LC005402052		LC07931171
PZ-8 CLAMP	LC07913056		LC07208503	LC1551510		LC005402052	LCPP601022	LC07931171
PZ-8 THREAD	LC07913063		LC07208503	LC1551512		LC005402052		LC07931171
PZ-9 CLAMP	LC07913065		LC07208503	LC1551510		LC005402052	LCPP601022	LC07931171
PZ-9 THREAD	LC07913076		LC07208503	LC1551512		LC005402052		LC07931171

Copyright © [OLEC ETS]. All rights reserved.

GARDNER DENVER PZ-7, PZ-8, PZ-9 W/ WEAR PLATE

FLUID END MODULE & ACCESSORIES

ITEM	OEM PART	DESCRIPTION	QTY PER PUMP
1		MODULE, STUDDED FLUID END W/ WEAR PLATE GROOVE (INCLUDES ITEMS 1-25)	3
2	79L188	STUD, FRAME & LINER CLAMP	24
3	50B36	NUT, FRAME & LINER CLAMP STUD	48
4	79L73	STUD, FRAME	12
5	50AQ30	NUT, FRAME STUD	12
6	79AL6	STUD, VALVE COVER	48
7	50B34	NUT, VALVE COVER STUD	48
8	202PZL110	STUD, DISCHARGE MANIFOLD	12
9	50B34	NUT, DISCHARGE MANIFOLD STUD	12
10	2011861	RING, VALVE COVER GASKET EXPANDER	6
11	2011862	GASKET, VALVE COVER - RUBBER (SEE DATASHEET FOR ALTERNATE MATERIALS)	6
12	2007674	BUSHING, VALVE GUIDE	6
13	2011860	COVER, VALVE	6
14	2011699	RING, VALVE COVER THREADED (2 1/2" THICK)	6
14A		RING, HEAVY VALVE COVER THREADED (3" THICK)	6
15	2011857	CAP, VALVE COVER LOCK	6
16	2011701	PLATE, RETAINER	6
17	2011700	GUIDE, LOWER VALVE SUCTION	3
18	95W2	WASHER, VALVE GUIDE LOCK	6
19	655EE06S	SCREW 1/2"x1 3/4" 316SS HX HD C/S	6
20	25AL35	GASKET, DISCHARGE MANIFOLD	3
21	25G41	GASKET, SUCTION MANIFOLD	3
22	1PV14	CLAMP, LINER	3
23		PLATE, WEAR	3
24		SEAL, WEAR PLATE	3
25	2011706	ASSY., LOWER VALVE GUIDE (INCLUDES 12, 16 -19)	3

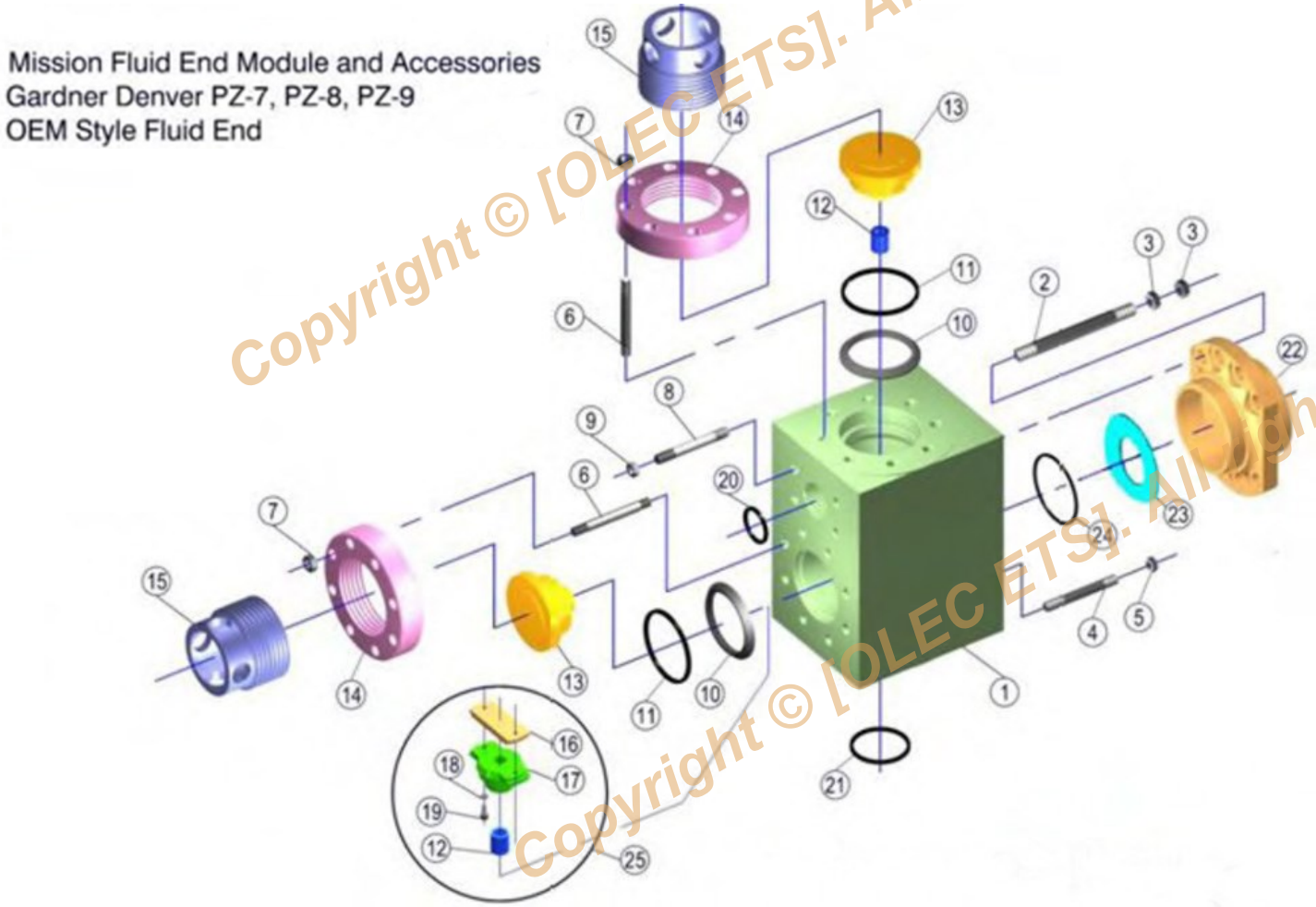

Copyright © [OLEC ETS]. All rights reserved.

GARDNER DENVER	PZ-10,PZ-11	7*10,7*11

	LINERS		LINER GASKETS		PISTONS		PISTON REPLACEMENT RUB-BERS	
SIZE	SUPREME	CERAMIC	RUBBER	URETHANE	SUPREME	WHITE LIGHTNING	SUPREME	WHITE LIGHTNING
4"	LC05496400	LC07496400	LC07916692		LC012180170		LC015180102	
4-1/2"	LC05496450	LC07496450	LC07916692		LC012180196	LC012180197	LC015180144	LC015180145
5"	LC05496500	LC07496500	LC07916692		LC012180253	LC012180254	LC015180185	LC015180186
5-1/2"	LC05496550	LC07496550	LC07916692		LC012180337	LC012180338	LC015180227	LC015180228
6"	LC05496600	LC07496600	LC07916692		LC012180394	LC012180395	LC015180268	LC015180269
6-1/4"	LC05496625		LC07916692		LC012180493	LC012180494	LC015180284	LC015180285
6-1/2"	LC05496650	LC07496650	LC07916692		LC012180535	LC012180536	LC015180300	LC015180301
6-3/4"			LC07916692					
7”	LC05496700	LC07496700	LC07916692		LC012180618	LC012180619	LC015180342	LC015180343

GASKETS		OEM	OEM URETHANE	L STYLE	L STYLE URETHANE
	VALVE COVER	LC07916780	LC07916498	LC07207129	LC07211007
	CYLINDER HEAD	LC07916780	LC07916498		
	WEAR PLATE				

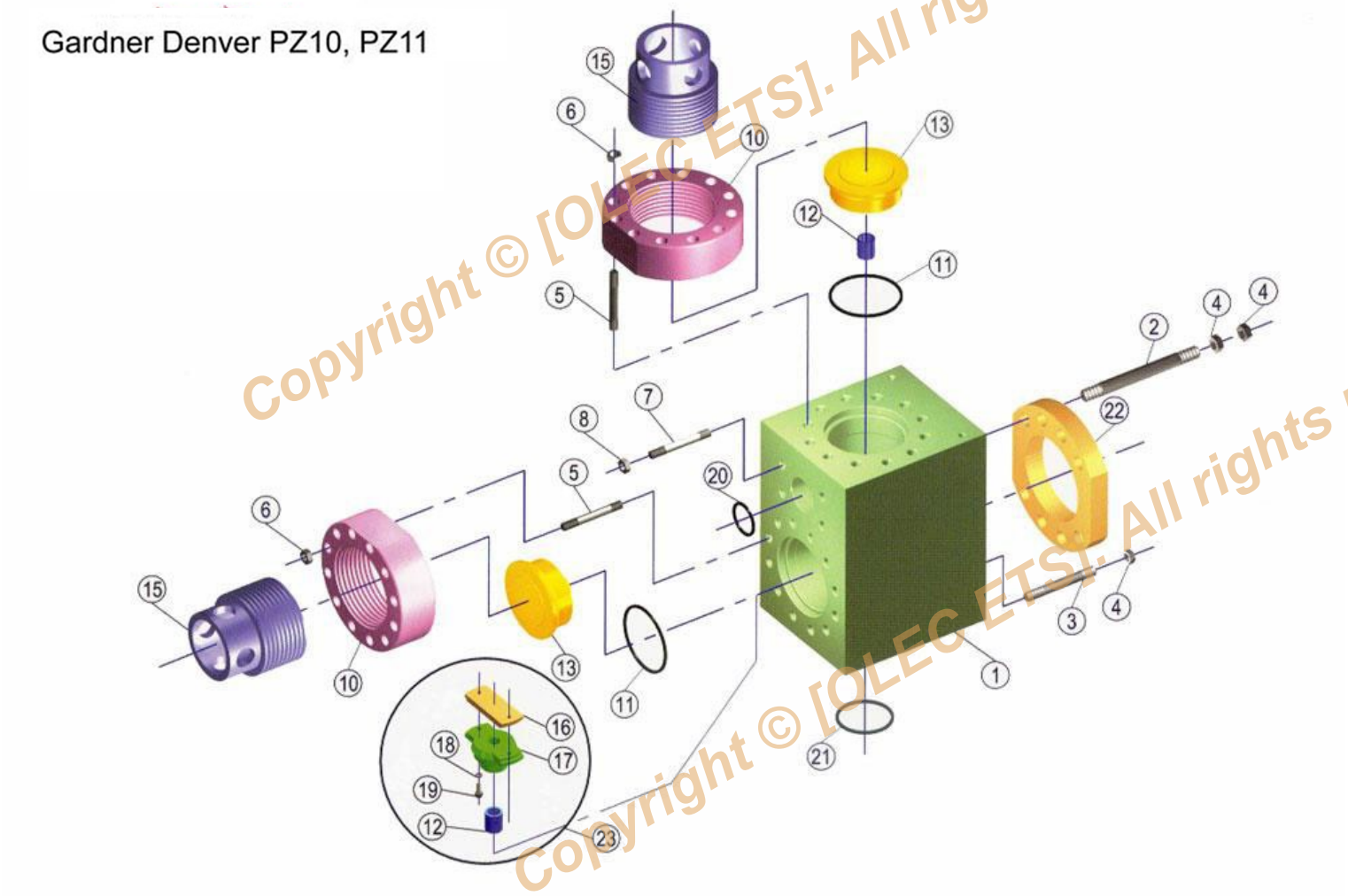

Copyright © [OLEC ETS]. All rights reserved.

GARDNER DENVER PZ-10, PZ-11

FLUID END MODULE & ACCESSORIES

ITEM	OEM PART	DESCRIPTION	QTY PER PUMP
		ASSY, COMPLETE FLUID END MODULE (INCLUDES ITEMS 1-21)	3
1A	202PZL029B	MODULE, STUDDED FLUID END (INCLUDES ITEMS 1-8)	3
1B		MODULE, STUDDED FLUID END MADE FROM 4135 MATERIAL (INCLUDES ITEMS 1B-8)	
1	302PZL029	MODULE, ONLY	3
2	201PZL110	STUD, FRAME & LINER CLAMP LONG	24
3	205PZL110	STUD, FRAME & LINER CLAMP SHORT	24
4	50B36	NUT, FRAME & LINER CLAMP STUD	72
5	204PZL110	STUD, THREADED RING	72
6	50B34	NUT, THREADED RING STUD	72
7	202PZL110	STUD, DISCHARGE MANIFOLD	12
8	50B34	NUT, DISCHARGE MANIFOLD STUD (SAME AS ITEM 6)	12
10	200PZL387	RING, VALVE COVER THREADED	6
11	204PZL715	GASKET, VALVE COVER - RUBBER (SEE DATASHEET FOR ALTERNATE MATERIALS)	6
12	2007674	BUSHING, VALVE GUIDE	6
13	200PZL147	COVER, VALVE	6
15	200PZL587	CAP, VALVE COVER LOCK	6
16	2011701	PLATE, RETAINER	3
17	200PZL483	GUIDE, VALVE SUCTION	3
18	95W2	WASHER, VALVE GUIDE LOCK	6
19	655EE065	SCREW, VALVE GUIDE TO RETAINER PLATE	6
20	25AL35	GASKET, DISCHARGE MANIFOLD	3
21	25BE41	GASKET, SUCTION MANIFOLD	3
22	200PZL455	CLAMP, LINER	3
23	200PZL483A	ASSY, LOWER VALVE GUIDE (INCLUDES ITEMS 11, 14-17)	3

DESCRIPTION	SUPREME	ROUGHNECK	ROUGHNECK HP	GD No.	
VALVE (White Insert)	LC060155042	LC9700368	LC9700356		
VALVE (Urethane Insert)	LC060155041	LC9700250	LC9700354	202PZL482A	
VALVE (Rubber)	LC060155033	LC9700293			
VALVE SEAT	LC061101507	LC9702504	LC9702504	202PZL039	
INSERT (Urethane)	LC062400338	LC9705228	LCPF071	201PZL106	
INSERT (Rubber)	LC062400239	LC9705244			
VALVE SPRING	LC055403257	LC055213417	LC055213417	78H44	
LOCK NUT,VALVE				50V27	
WASHER,VALVE				201PZL279	
SEAT PULLER ASSEMBLY	LCM1060	LCM1060	LCM1060	100E12	
PULLER HEAD	LC181235300	LC8401985	LC8401985	100E13	

Model	CROSSHEAD ROD	SELF ALIGNING ROD ASSEMBLY	PONY ROD BAFFLE	PISTON ROD	SUB ROD	PISTON ROD NUT	CLAMP ASSEMBLY	Pony Rod Seal
PZ-10 CLAMP	LC07913078		LC07208503	LC1551712		LC005402052	LCPP601023	LC07931171
PZ-10 THREAD	LC07913076		LC07208503	LC1551719		LC005402052		LC07931171

Copyright © [OLEC ETS]. All rights reserved.

GARDNER DENVER PZ-10, PZ-11 W/ WEAR PLATE			
FLUID END MODULE & ACCESSORIES			
ITEM	OEM PART	DESCRIPTION	QTY PER PUMP
1		MODULE, STUDDED FLUID END W/ WEAR PLATE GROOVE (INCLUDES ITEMS 1-8)	3
2	201PZL110	STUD, FRAME & LINER CLAMP LONG	24
3	205PZL110	STUD, FRAME & LINER CLAMP SHORT	24
4	50B36	NUT, FRAME & LINER CLAMP STUD	72
5	204PZL110	STUD, THREADED RING	72
6	50B34	NUT, THREADED RING STUD	72
7	202PZL110	STUD, DISCHARGE MANIFOLD	12
8	50B34	NUT, DISCHARGE MANIFOLD STUD (SAME AS ITEM 6)	12
9	200PZL387	RING, VALVE COVER THREADED	6
10	204PZL715	GASKET, VALVE COVER - RUBBER (SEE DATASHEET FOR ALTERNATE MATERIALS)	6
11	2007674	BUSHING, VALVE GUIDE	6
12	200PZL147	COVER, VALVE	6
13	200PZL587	CAP, VALVE COVER LOCK	6
14	2011701	PLATE, RETAINER	3
15	200PZL483	GUIDE, VALVE SUCTION	3
16	655EE065	SCREW, VALVE GUIDE TO RETAINER PLATE	6
17	95W2	WASHER, VALVE GUIDE LOCK	6
18	25AL35	GASKET, DISCHARGE MANIFOLD	3
19	25BE41	GASKET, SUCTION MANIFOLD	3
20	200PZL455	CLAMP, LINER	3
21		PLATE, WEAR	3
22		SEAL, WEAR PLATE	3
23	200PZL483A	ASSY, LOWER VALVE GUIDE (INCLUDES ITEMS 11, 14-17)	3
24	655EG08N	CAPSCREW, SUCTION MANIFOLD - NOT SHOWN	24
25		WASHER, SUCTION MANIFOLD CAPSCREW LOCK	24

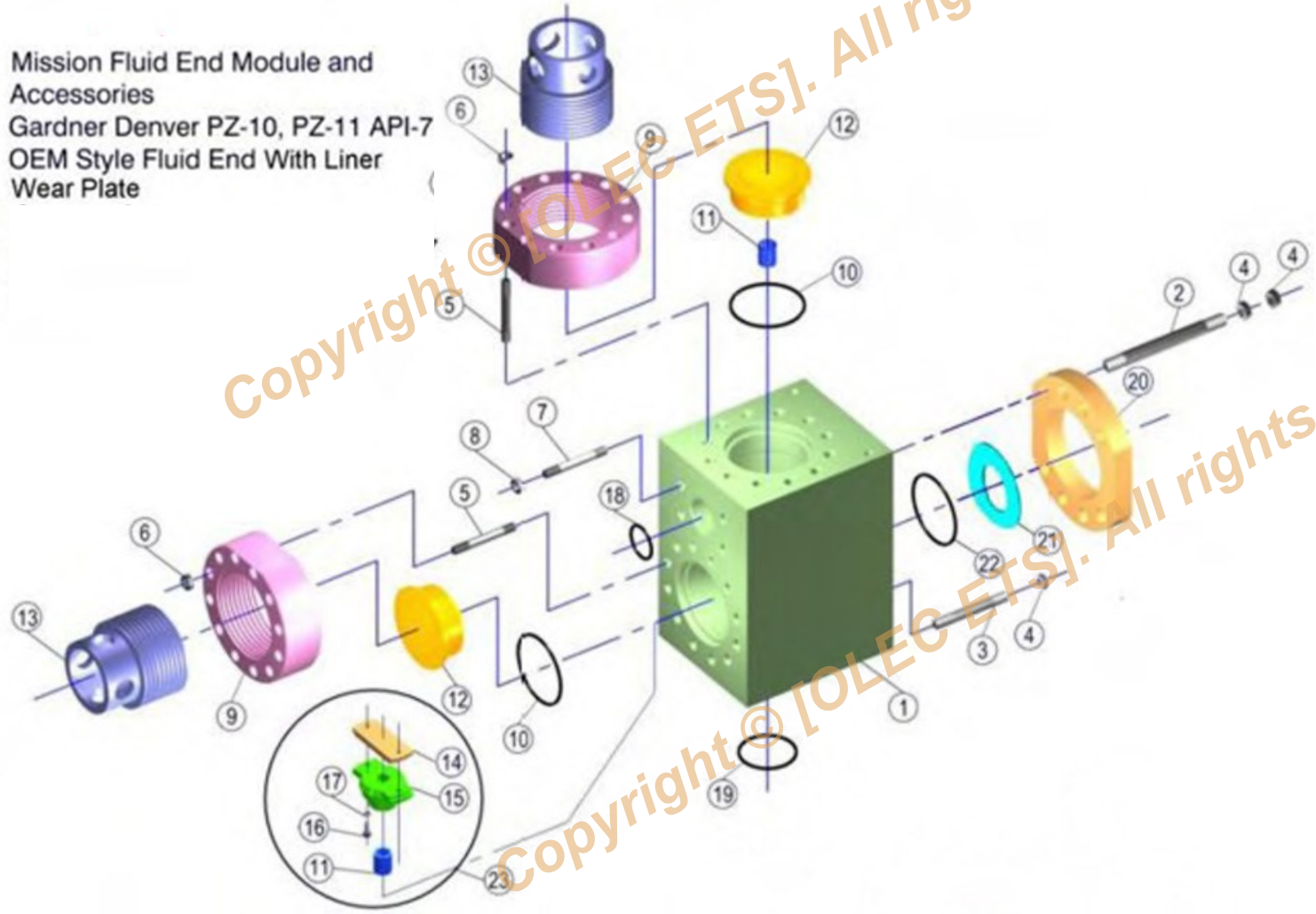

Copyright © [OLEC ETS]. All rights reserved.

PZ-10 & PZ-11 "L" SHAPED			
Item	Part No.	Description	Qty per Pump
	LC-8477-A	Complete Assembly	(3)
	LC-8477-1	Fluid Module, Discharge - Studded (included items 1-6)	(3)
1		Fluid Module - Discharge	3
2	LC-4018-35	Stud w/Nut - Frame	24
3	LC-4016-97	Stud w/Nut - Suction Module	18
4	LC-4017-5	Stud w/Nut - Discharge Manifold	12
5	LC-4018-34	Stud w/2 Nut - Liner Retainer	24
6	LC-4015-2	Stud w/Nut - Valve Cover	72
	LC-8477-2	Fluid Module, Suction - Studded (included items 6-7)	(3)
7		Fluid Module - Suction	3
8	LC-2988	Seal - Suction Module	3
9	LC-8488-5	Dowel Pin	6
10	LC-25BE41	Seal - Suction Manifold	3
11	LC-4475	Threaded Flange	6
12	LC-4575	Screw Gland	6
	LC-4675-1A	Valve Cover Plug Assembly (included items 13-16)	(6)
13	LC-4675-1	Plug - Valve Cover	6
14	LC-4775	Valve Guide	6
15	LC-4016-99	Stud w/Nut - Valve Guide	24
16	LC-4700-I	Insert - Valve Guide	6
17	LC-P129	Seal - Valve Cover Plug	6
18	LC-6477	Liner Retainer Flange	3
19	LC-8477-3	Plate - Wear	3
20	LC-2930-08	Seal - Wear Plate	3
21	LC-25AL35	Seal - Discharge Manifold	3

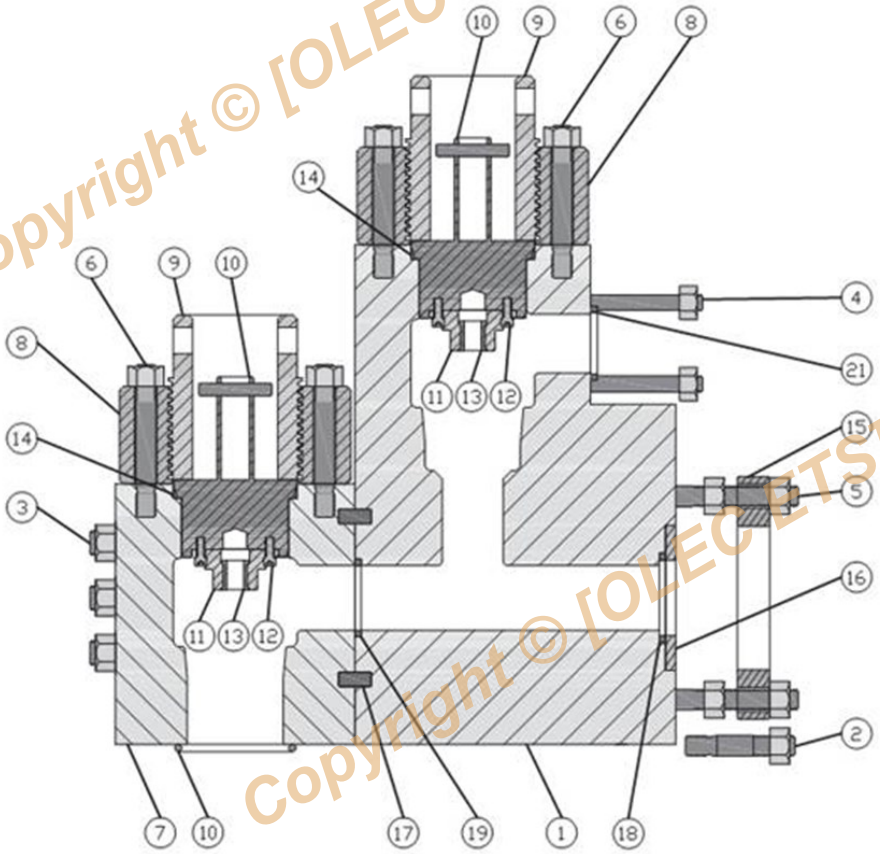

Copyright © [OLEC ETS]. All rights reserved.

LC-PZ-11 7500PSI GARDNER DENVER			
FLUID END MODULE & ACCESSORIES			
ITEM #	OEM PART #	DESCRIPTION	QTY PER PUMP
	LC-300PZL2039	Fluid Cylinder Assembly	3
1	LC-300PZL029	Fluid Cylinder	3
30	LC-302PZL110	Stud,Liner Clamp	36
31	LC-300PZL110	Stud,Fluid Cylinder to Frame Alignment(Upper)	6
32	LC-303PZL110	Stud,Fluid Cylinder to Frame (Lower)	6
33	LC-301PZL110	Stud,Valve Cover Retainer and Discharge Manifold	84
2	LC-50B36	Nut	168
3	LC-303PZL316	Seal	3
4	LC-302PZL483	Valve Guide (Upper)	3
5	LC-301PZL234	Wear Ring	3
6	LC-301PZL205	Valve Guide Retainer	3
8	LC-2009671	Flange,Suction,Blind	2
9	LC-309PZL316	Seal	6
10	LC-50AW61Z	Nut	48

ITEM #	OEM PART #	DESCRIPTION	QTY PER PUMP
11	LC-302PZL147	Valve Cover (Upper)	3
12	LC-15P27	Eye Bolt	6
13	LC-300PZL387	Valve Cover Ring	6
14	LC-300PZL587	Cover Lock	6
15	LC-25BE41	Gasket	3
16	LC-300PZL069	Suction Manifold	1
17	LC-655EG10N	Screw	24
18	LC-25C1154N	Ring Gasket	3
19	LC-64CU12	Flange,Weld Neck	1
20	LC-75A150	Screw	36
21	LC-50B9	Nut	36
22	LC-302PZL316	Seal	3
23	LC-302PZL071	Discharge Manifold	1
24	LC-25BC638	Gasket	2
25	LC-64BE838	Flange	2
26	LC-305PZL110	Stud,Discharge lange	24
27	LC-300PZL229	Bushing	12
28	LC-303PZL147	Valve Cover (Lower)	3
29	LC-303PZL483	Valve Guide (Lower)	3

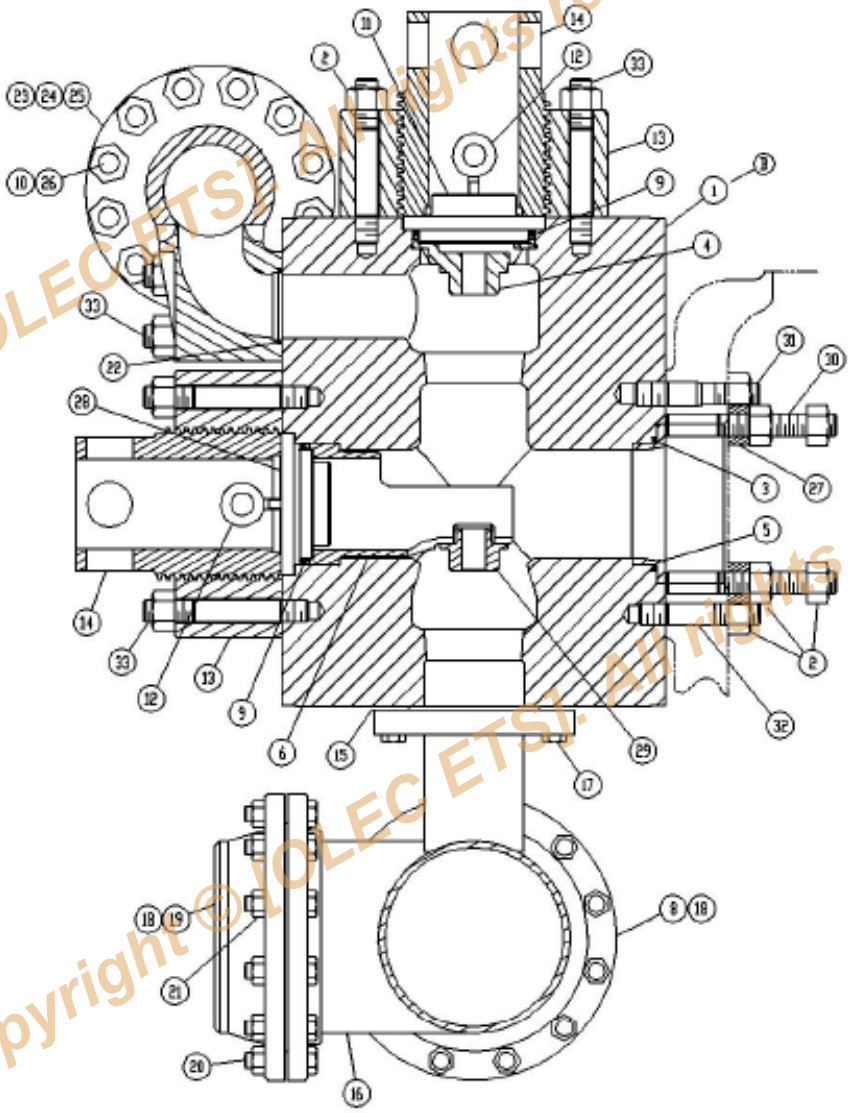

Copyright © [OLEC ETSI. All rights reserved.

IDECO T500, T800, T1000 O.E.M. Style Fluid End & Spares			
Item No.	**O.E.M. Part No.**	**Description**	**Qty/Pump**
	551-458	Fluid End Module, Studded (INCLUDES ITEMS 1-7)	
1	551-422-01	Fluid End Module Only	3
2 & 3	Assembly	Power End Stud w/ Nut	24
2	551-410-01	Power End Stud	24
3	IN-416	Power End Stud Nut	24
4 & 5	Assembly	Discharge Manifold Stud w/ Nut	12
4	551-410-02	Discharge Manifold Stud	12
5	IN-416	Discharge Manifold Stud Nut	12
6 & 7	Assembly	Threaded Ring Stud w/ Nut	48
6	551-410-03	Threaded Ring Stud	48
7	IN-416	Threaded Ring Stud Nut	48
8	551-405-07	Lower Valve Guide (includes T8013 VGB)	3
9	551-422-04	Lower Valve Guide Retainer	3
10	BT-1669-63-09	Cylinder Head Plug & Liner Gasket	9
11	551-422-02	Cylinder Head Plug	3
12	551-405-03	Threaded Ring	9
13	551-405-04	Threaded Plug Retainer	6
14	551-422-03	Cylinder Head Plug Top (Includes 18&19)	3
15	551-405-05	Threaded Liner Retainer	3
16	IO-548	Discharge Manifold Gasket	3
17	IO-521	Suction Manifold Gasket	3
18	No O.E.M. #	Upper Valve Guide	3
19	551-405-09	Valve Guide Bushing	6
20	IC-1913	Suction Manifold Bolt (w/ Washer)	24

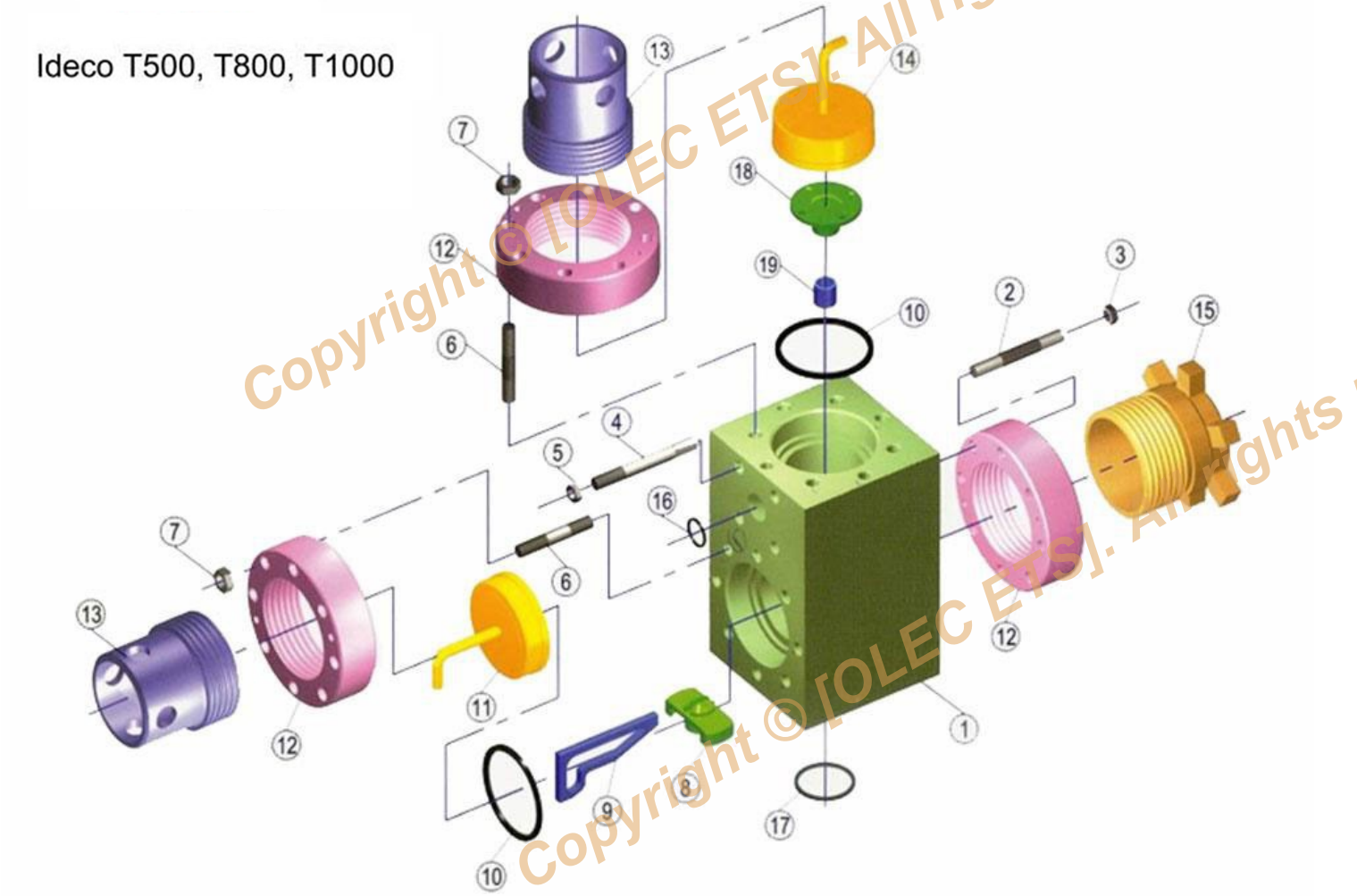

Copyright © [OLEC ETS]. All rights reserved.

IDECO			T-500					7*8
	LINERS		LINER GASKETS		PISTONS		PISTON REPLACEMENT RUBBERS	
SIZE	SUPREME	CERAMIC	RUBBER	URETHANE	SUPREME	WHITE LIGHTNING	SUPREME	WHITE LIGHTNING
4"					LC012180170		LC015180102	
4-1/2"	LC05512450	LC07512450	LC07916789	LC07916783	LC012180196	LC012180197	LC015180144	LC015180145
5"	LC05512500	LC07512500	LC07916789	LC07916783	LC012180253	LC012180254	LC015180185	LC015180186
5-1/2"	LC05512550	LC07512550	LC07916789	LC07916783	LC012180337	LC012180338	LC015180227	LC015180228
6"	LC05512600	LC07512600	LC07916789	LC07916783	LC012180394	LC012180395	LC015180268	LC015180269
6-1/4"	LC05512625		LC07916789	LC07916783	LC012180493	LC012180494	LC015180284	LC015180285
6-1/2"	LC05512650	LC07512650	LC07916789	LC07916783	LC012180535	LC012180536	LC015180300	LC015180301
6-3/4"								
7"	LC05512700	LC07512700	LC07916789	LC07916783	LC012180618	LC012180619	LC015180342	LC015180343
7-1/4"								
7-1/2"								

GASKETS		OEM	OEM URETHANE	L STYLE	L STYLE URETHANE
	VALVE COVER	LC07916783	LC07916789		
	CYLINDER HEAD	LC07916783	LC07916789		
	WEAR PLATE				

DESCRIPTION	SUPREME	ROUGHNECK	ROUGHNECK HP		
VALVE (White Insert)	LC060152809	LC9700367	LC9700359		
VALVE (Urethane Insert)	LC060152808	LC9700285	LC9700353		
VALVE (Rubber)	LC060122702	LC9702601			
VALVE SEAT	LC061102653	LC9702547	LC9702547		
INSERT (Urethane)	LC062400106	LC9705090	LC9700363		
INSERT (Rubber)	LC062400056	LC9705155			
VALVE SPRING	LC055413421	LC8201684	LC8201684		
SEAT PULLER ASSEMBLY	LCM1060	LCM1060	LCM1060		
PULLER HEAD	LC181235052	LC8401977	LC8401977		

Model	CROSSHEAD ROD	SELF ALIGNING ROD ASSEMBLY	PONY ROD BAFFLE	PISTON ROD	SUB ROD	PISTON ROD NUT	CLAMP ASSEMBLY	Pony Rod Seal
T-500	LC07913082			LC1551718		LC005402052	LCPT604500	

Copyright © [OLEC ETS]. All rights reserved.

IDECO	T-800,T-1000							7*9,7*10
	LINERS		LINER GASKETS		PISTONS		PISTON REPLACEMENT RUBBERS	
SIZE	SUPREME	CERAMIC	RUBBER	URETHANE	SUPREME	WHITE LIGHTNING	SUPREME	WHITE LIGHTNING
4"					LC012180170		LC015180102	
4-1/2"	LC05502450	LC07502450	LC07916789	LC07916783	LC012180196	LC012180197	LC015180144	LC015180145
5"	LC05502500	LC07502500	LC07916789	LC07916783	LC012180253	LC012180254	LC015180185	LC015180186
5-1/2"	LC05502550	LC07502550	LC07916789	LC07916783	LC012180337	LC012180338	LC015180227	LC015180228
6"	LC05502600	LC07502600	LC07916789	LC07916783	LC012180394	LC012180395	LC015180268	LC015180269
6-1/4"	LC05502625		LC07916789	LC07916783	LC012180493	LC012180494	LC015180284	LC015180285
6-1/2"	LC05502650	LC07502650	LC07916789	LC07916783	LC012180535	LC012180536	LC015180300	LC015180301
6-3/4"								
7"	LC05502700	LC07502700	LC07916789	LC07916783	LC012180618	LC012180619	LC015180342	LC015180343
7-1/4"								
7-1/2"								

GASKETS		OEM	OEM URETHANE	L STYLE	L STYLE URETHANE
	VALVE COVER	LC07916783	LC07916789		
	CYLINDER HEAD	LC07916783	LC07916789		
	WEAR PLATE				

DESCRIPTION	SUPREME	ROUGHNECK	ROUGHNECK HP		
VALVE (White Insert)	LC060152809	LC9700367	LC9700359		
VALVE (Urethane Insert)	LC060152808	LC9700285	LC9700353		
VALVE (Rubber)	LC060122702	LC9702601			
VALVE SEAT	LC061102653	LC9702547	LC9702547		
INSERT (Urethane)	LC062400106	LC9705090	LC9700363		
INSERT (Rubber)	LC062400056	LC9705155			
VALVE SPRING	LC055413421	LC8201684	LC8201684		
SEAT PULLER ASSEMBLY	LCM1060	LCM1060	LCM1060		
PULLER HEAD	LC181235052	LC8401977	LC8401977		

Model	CROSSHEAD ROD	SELF ALIGNING ROD ASSEMBLY	PONY ROD BAFFLE	PISTON ROD	SUB ROD	PISTON ROD NUT	CLAMP ASSEMBLY	Pony Rod Seal
T-800	LC1681516		LC07208501	LC1551717		LC005402052	LCPT604800	
T-1000	LC1681540		LC07208501	LC1551717		LC005402052	LCPT604800	

Copyright © [OLEC ETS]. All rights reserved.

IDECO T500, T800, T1000 O.E.M. Style Fluid End & Spares			
Item No.	**O.E.M. Part No.**	**Description**	**Qty/Pump**
	551-458	Fluid End Module, Studded (INCLUDES ITEMS 1-7)	
1	551-422-01	Fluid End Module Only	3
2 & 3	Assembly	Power End Stud w/ Nut	24
2	551-410-01	Power End Stud	24
3	IN-416	Power End Stud Nut	24
4 & 5	Assembly	Discharge Manifold Stud w/ Nut	12
4	551-410-02	Discharge Manifold Stud	12
5	IN-416	Discharge Manifold Stud Nut	12
6 & 7	Assembly	Threaded Ring Stud w/ Nut	48
6	551-410-03	Threaded Ring Stud	48
7	IN-416	Threaded Ring Stud Nut	48
8	551-405-07	Lower Valve Guide (includes T8013 VGB)	3
9	551-422-04	Lower Valve Guide Retainer	3
10	BT-1669-63-09	Cylinder Head Plug & Liner Gasket	9
11	551-422-02	Cylinder Head Plug	3
12	551-405-03	Threaded Ring	9
13	551-405-04	Threaded Plug Retainer	6
14	551-422-03	Cylinder Head Plug Top (Includes 18&19)	3
15	551-405-05	Threaded Liner Retainer	3
16	IO-548	Discharge Manifold Gasket	3
17	IO-521	Suction Manifold Gasket	3
18	No O.E.M. #	Upper Valve Guide	3
19	551-405-09	Valve Guide Bushing	6
20	IC-1913	Suction Manifold Bolt (w/ Washer)	24

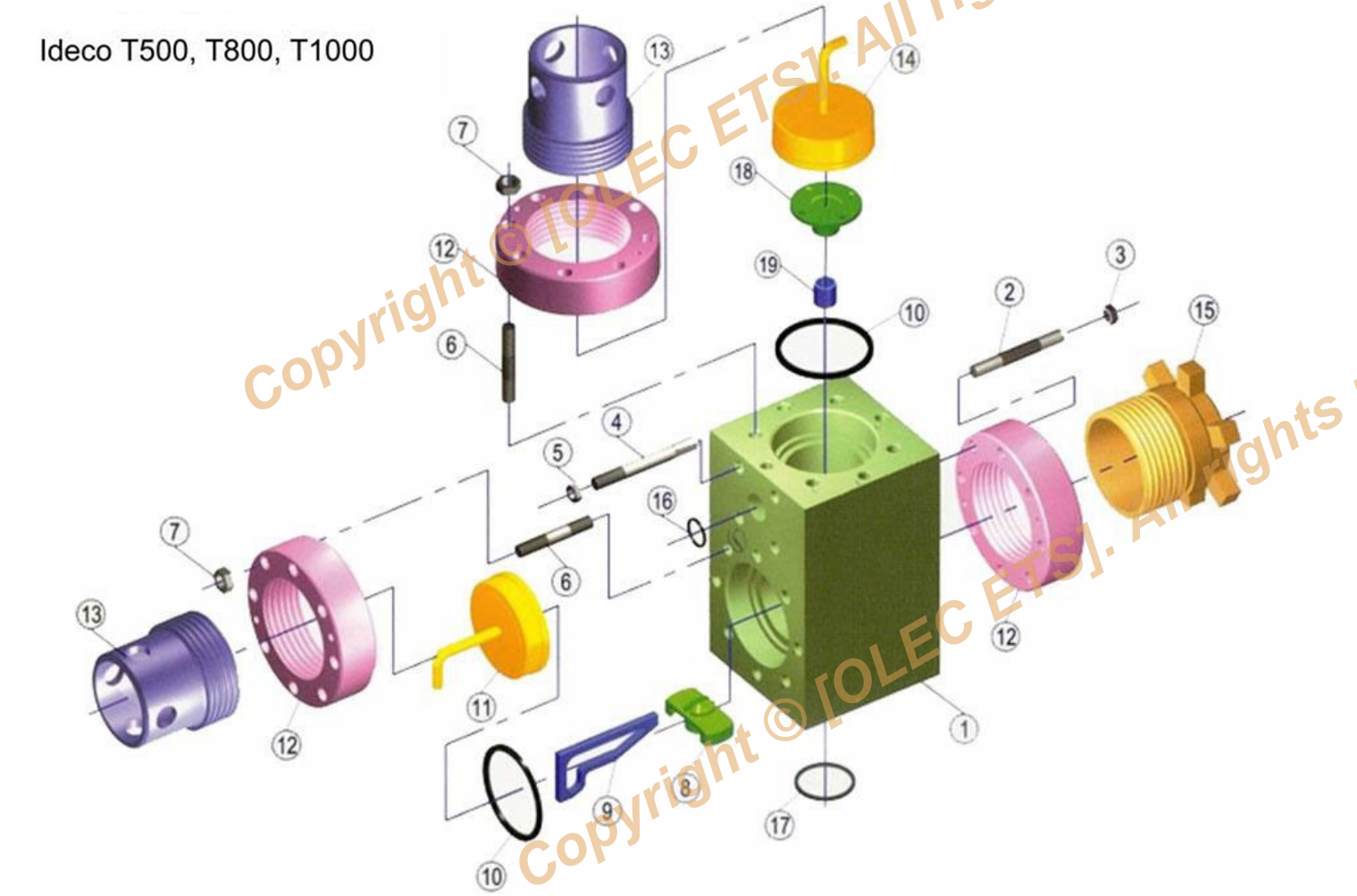

Copyright © [OLEC ETS]. All rights reserved.

IDECO	T-1300,T-1600							7-1/2*12
	LINERS		LINER GASKETS		PISTONS		PISTON REPLACEMENT RUBBERS	
SIZE	SUPREME	CERAMIC	RUBBER	URETHANE	SUPREME	WHITE LIGHTNING	SUPREME	WHITE LIGHTNING
4"	LC05507400	LC07507400	LC07916782	LC07916082	LC012180170		LC015180102	
4-1/2"	LC05507450	LC07507450	LC07916782	LC07916082	LC012180196	LC012180197	LC015180144	LC015180145
5"	LC05507500	LC07507500	LC07916782	LC07916082	LC012180253	LC012180254	LC015180185	LC015180186
5-1/2"	LC05507550	LC07507550	LC07916782	LC07916082	LC012180337	LC012180338	LC015180227	LC015180228
6"	LC05507600	LC07507600	LC07916782	LC07916082	LC012180394	LC012180395	LC015180268	LC015180269
6-1/4"	LC05507625	LC07507625	LC07916782	LC07916082	LC012180493	LC012180494	LC015180284	LC015180285
6-1/2"	LC05507650	LC07507650	LC07916782	LC07916082	LC012180535	LC012180536	LC015180300	LC015180301
6-3/4"								
7"	LC05507700	LC07507700	LC07916782	LC07916082	LC012180618	LC012180619	LC015180342	LC015180343
7-1/4"								
7-1/2"	LC05507750	LC07507750	LC07916782	LC07916082	LC012180683	LC0121806850	LC015180367	LC015180369

GASKETS		OEM	OEM URETHANE	L STYLE	L STYLE URETHANE
	VALVE COVER	LC07916782	LC07916082	LC07207129	LC07213007
	CYLINDER HEAD	LC07916782	LC07916082		
	WEAR PLATE			LC1290344	LC07211023

DESCRIPTION	SUPREME	ROUGHNECK	ROUGHNECK HP		
VALVE (White Insert)	LC060155042	LC9700368	LC9700356		
VALVE (Urethane Insert)	LC060155041	LC9700250	LC9700354		
VALVE (Rubber)	LC060155033	LC9700293			
VALVE SEAT	LC061101507	LC9702504	LC9702504		
INSERT (Urethane)	LC062400338	LC9705228	LCPF071		
INSERT (Rubber)	LC062400239	LC9705244			
VALVE SPRING	LC055403257	LC055213417	LC055213417		
SEAT PULLER ASSEMBLY	LCM1060	LCM1060	LCM1060		
PULLER HEAD	LC181235300	LC8401985	LC8401985		

Model	CROSSHEAD ROD	SELF ALIGNING ROD ASSEMBLY	PONY ROD BAFFLE	PISTON ROD	SUB ROD	PISTON ROD NUT	CLAMP ASSEMBLY	Pony Rod Seal
T-1300 T-1600	LC07913081		LC07208502	LC1551715		LC005402052	LCPPT604130	LC07931168

Copyright © [OLEC ETS]. All rights reserved.

IDECO T1300, T1600 O.E.M. Style Fluid End & Spares			
Item No.	O.E.M. Part No.	Description	Qty/Pump
1	551-122-01	Fluid End Module, Studded	3
2 & 3	Assembly	Power End Stud w/ Nut	24
2	551-110-01	Power End Stud	24
3	IN-415	Power End Stud Nut	24
4 & 5	Assembly	Discharge Manifold Stud w/ Nut	12
4	551-110-02	Discharge Manifold Stud	12
5	IN-416	Discharge Manifold Stud Nut	12
6 & 7	Assembly	Threaded Ring Stud w/ Nut	48
6	551-110-03	Threaded Ring Stud	48
7	IN-415	Threaded Ring Stud Nut	48
8	551-105-07	Lower Valve Guide (includes T8013 VGB)	3
9	551-105-08	Lower Valve Guide Retainer	3
10	BT-1669-63-08	Cylinder Head Plug & Liner Gasket	9
11	551-122-02	Cylinder Head Plug	3
12	551-122-03	Cylinder Head Plug Top (includes 18&19)	3
(part of Item 12)		Upper Valve Guide Screw w/ Washer	12
13	551-105-03	Threaded Ring	9
14	551-105-04	Threaded Plug Retainer	6
15	551-105-05	Threaded Liner Retainer	3
16	IO-548	Discharge Manifold Gasket	3
17	IO-507	Suction Manifold Gasket	3
18	551-105-06	Upper Valve Guide	3
19	551-105-09	Valve Guide Bushing	6
20	IC-1872	Suction Manifold Bolt (w/ Washer)	24

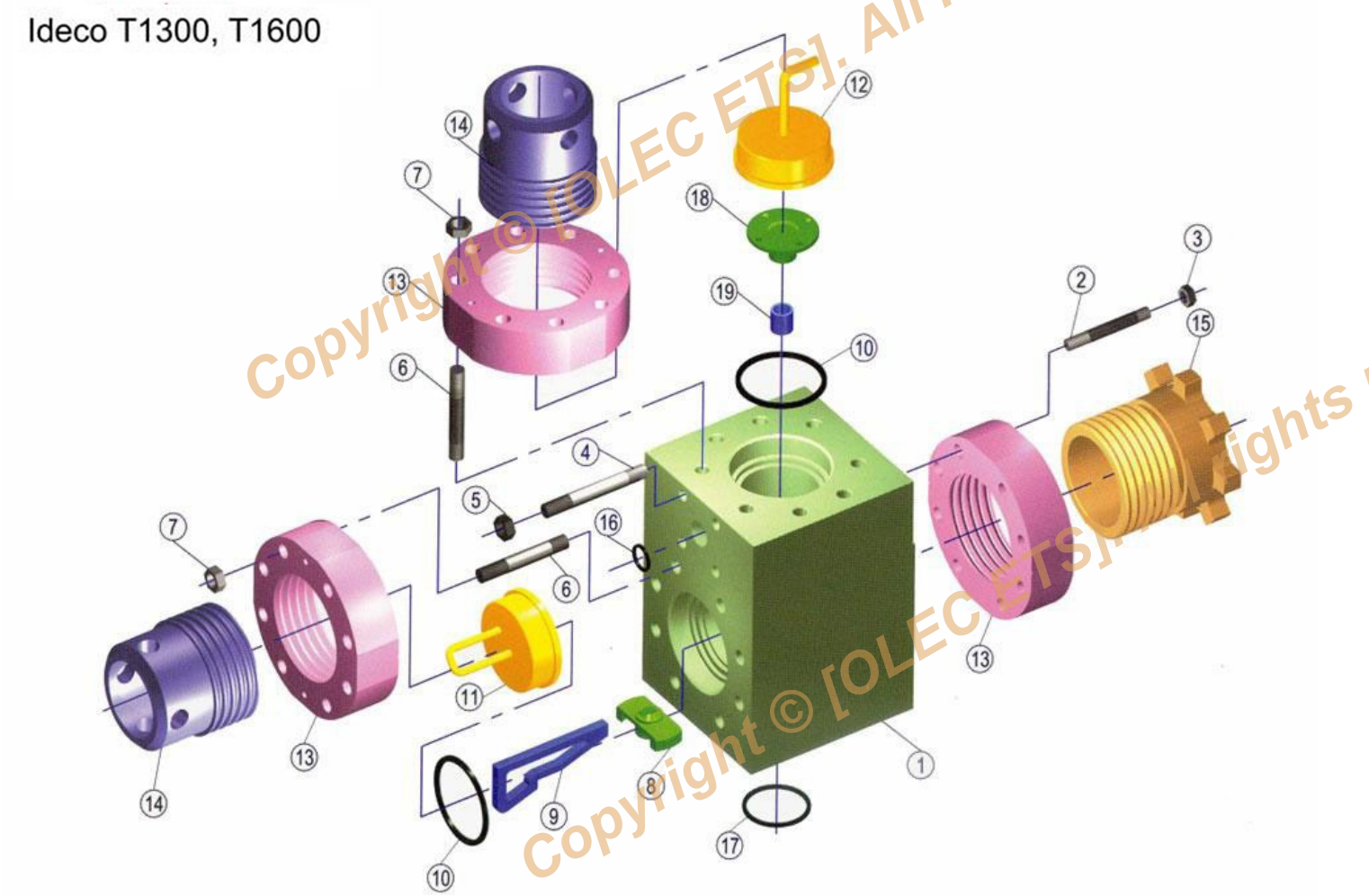

Copyright © [OLEC ETS]. All rights reserved.

T-1300 & T-1600 "L" SHAPED			
Item	Part No.	Description	Qty per Pump
	LC-8407-7A	Complete Assembly	(3)
	LC-8407-7	Fluid Module, Discharge - Studded (included items 1-5)	(3)
1		Fluid Module - Discharge	3
2	LC-4018-68	Stud w/Nut - Frame, Liner Retainer	24
3	LC-4016-97	Stud w/Nut - Suction Module	24
4	LC-4017-50	Stud w/Nut - Discharge Manifold	12
5	LC-4015-2	Stud w/Nut - Valve Cover	48
	LC-8407-11	Fluid Module, Suction - Studded (included items 5-6)	(3)
6		Fluid Module - Suction	3
7	LC-2988	Seal - Suction Module	3
8	LC-8488-5	Dowel Pin	6
9	LC-IO-507	Seal - Suction Manifold	3
10	LC-4475	Threaded Flange	3
11	LC-4575	Screw Gland	3
	LC-4675-2A	Valve Cover Plug Assembly (included items 12-15)	(3)
12	LC-4675-2	Plug - Valve Cover	3
13	LC-4775-2	Valve Guide	3
14	LC-4016-99	Stud w/Nut - Valve Guide	12
15	LC-4700-I	Insert - Valve Guide	3
16	LC-P129	Seal - Valve Cover Plug	3
17	LC-6407	Liner Retainer Flange	3
18	LC-6507	Nut - Liner Retainer	3
19	LC-8407-10	Plate - Wear	3
20	LC-2988	Seal - Wear Plate	3
21	LC-IO-548	Seal - Discharge Manifold	3

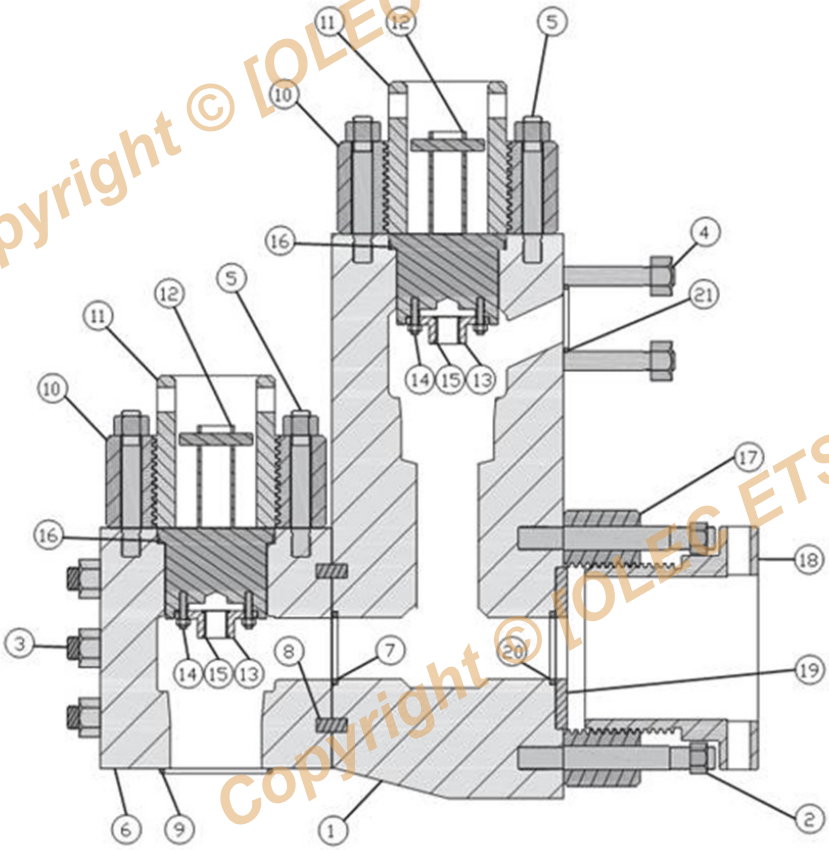

Copyright © [OLEC ETS]. All rights reserved.

OLEC W-440 FLUID END MODULE & ACCESSORIES

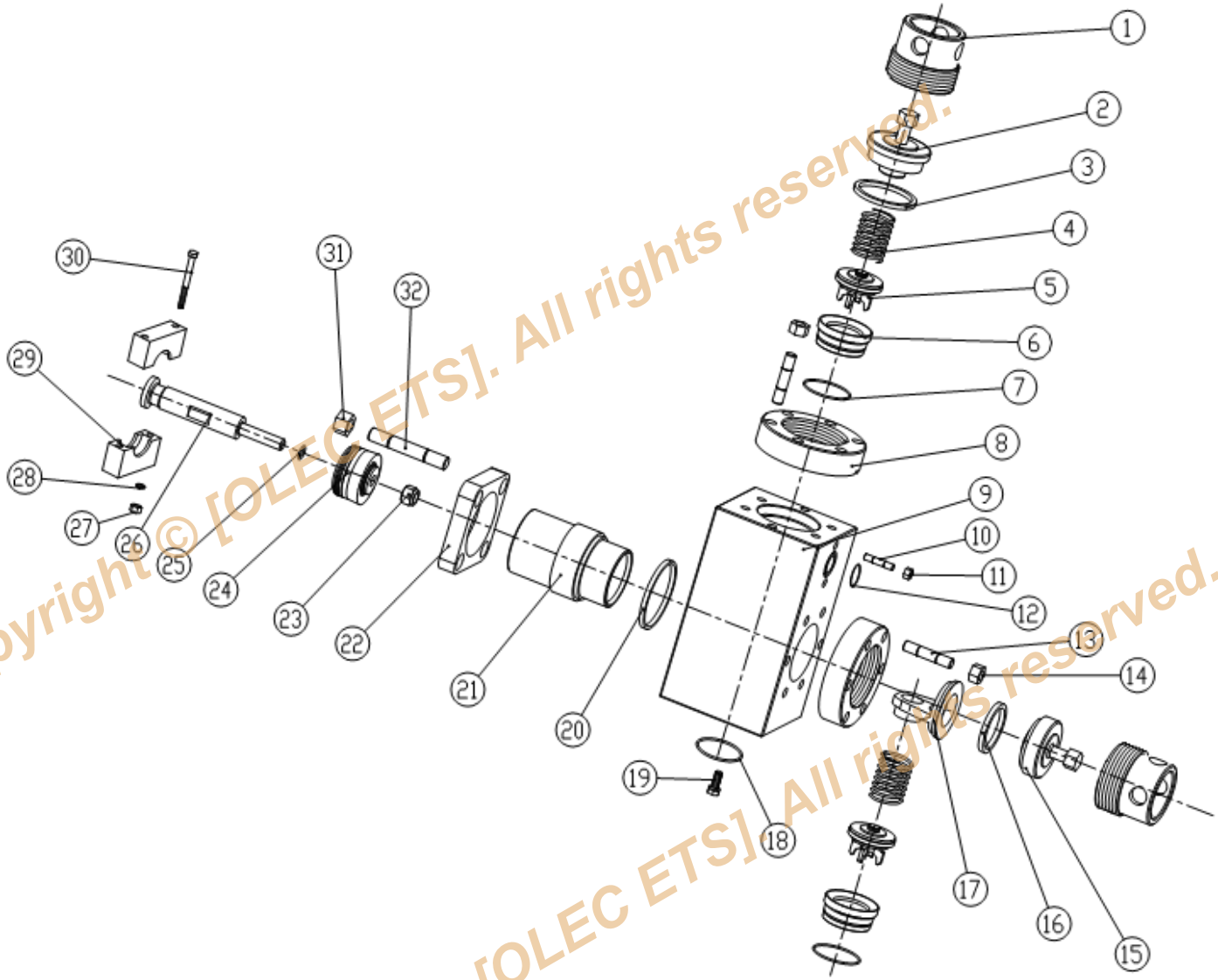

ITEM	PART NO.	DESCRIPTION	QTY	ITEM	PART NO.	DESCRIPTION	QTY
1	B-440343	Lock, Valve Cover	2	17	B-440321	Guide, Lower Valve	1
2	B-440323	Cover, Valve POT	1	18	GB/T 3452.1	O-Ring	1
3	W-440.01.010	Gasket Valve Cover	1	19	W0101	Stud	4
4	W-440.01.004	Spring	2	20	W-440.01.008	Gasket Liner	1
5	W-440.01.03.00	Valve（API #4）	2	21	W-440307	Liner	1
6	W-440.01.002	Seat	2	22	B-440322	Liner Lock	1
7	GB/T 3452.1	O-Ring	2	23	W-440.01.007	Nut Lock	1
8	D-440342	Flange, Valve Cover	2	24		Piston	1
9	D-440003	Module	1	25	GB/T 3452.1	O-Ring	1
10	W-440.01.013	Stud	2	26	B-440308	Piston Rod	1
11	NF2-3/4	Nut	2	27	W0105	Nut	2
12	GB/T 3452.1	O-Ring	1	28	GB/T93	Lock Washer	2
13	W-440.01.011	Stud	12	29	B-440227.01	Clamp	1
14	NF2-7/8	Nut	12	30	W0104	Stud	2
15	B-440309	Cylinder Head	1	31	W-440.01.006	Nut	4
16	W-440.01.001	Gasket Cylinder Head	1	32	W-440.01.005	Stud	4

Copyright © [OLEC ETS]. All rights reserved.