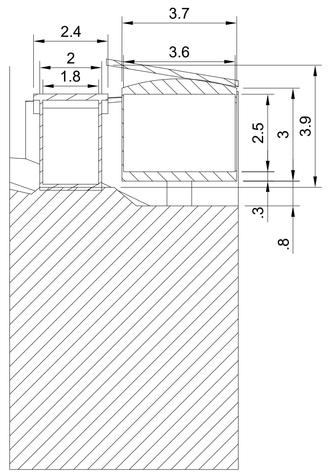

1-1 (0.01)

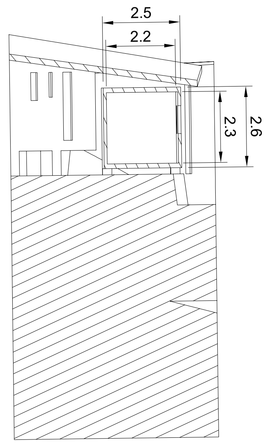

2-2 (0.01)

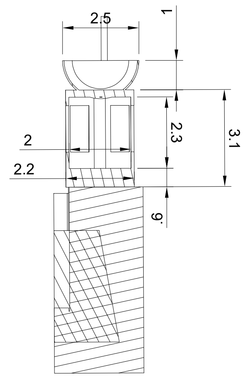

4-4 (0.01)

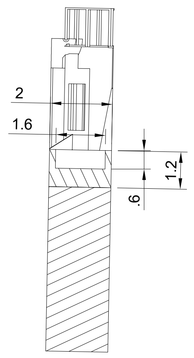

6-6 (0.01)

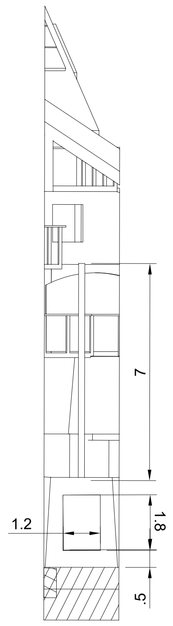

9-9 (0.01)

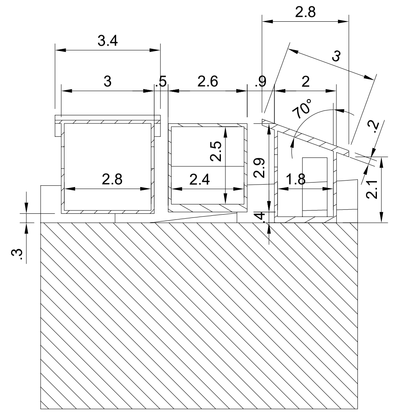

10-10 (0.01)

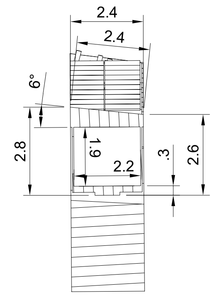

17-17 (0.01)

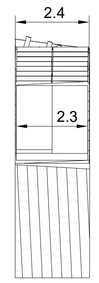

18-18 (0.01)

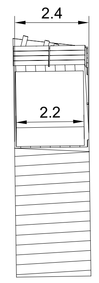

19-19 (0.01)

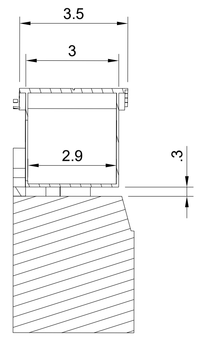

20-20 (0.01)

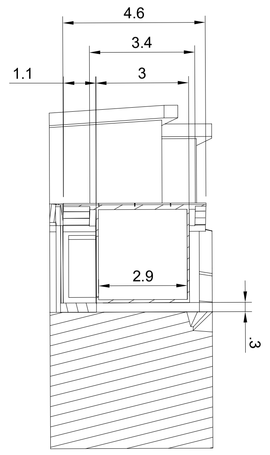

21-21 (0.01)

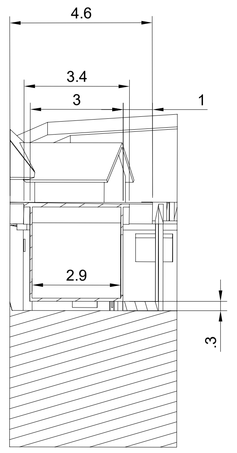

22-22 (0.01)

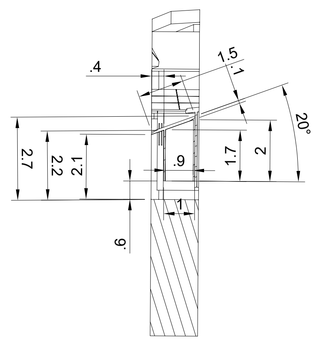

23-23 (0.01)

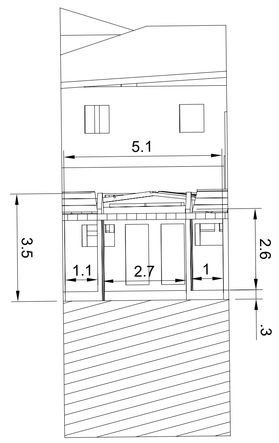

24-24 (0.01)

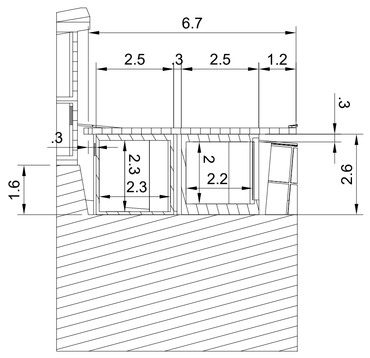

25-25 (0.01)

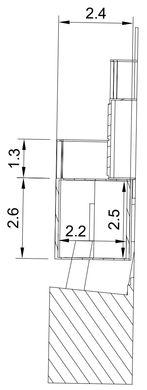

29-29 (0.01)

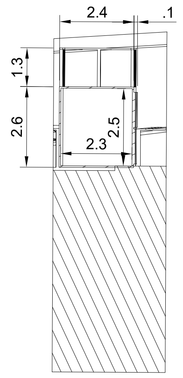

30-30 (0.01)

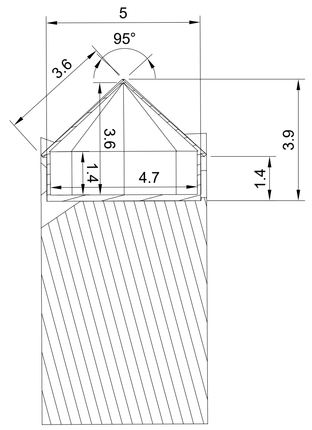

31-31 (0.01)

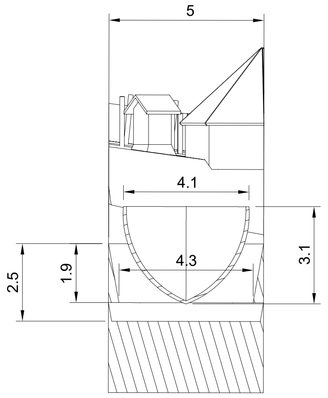

33-33 (0.01)

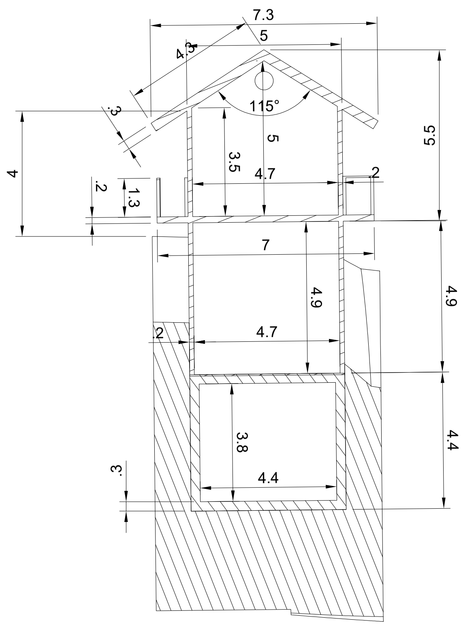

36-36 (0.01)

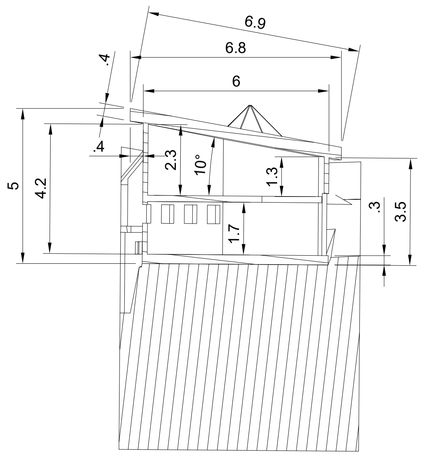

39-39 (0.01)

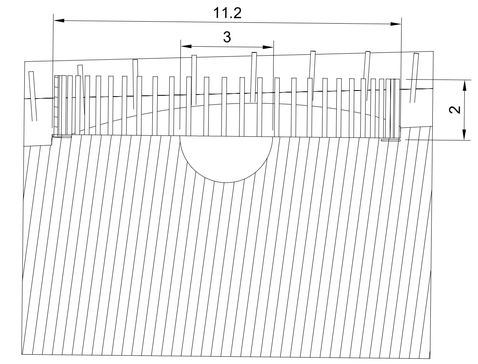

40-40 (0.01)

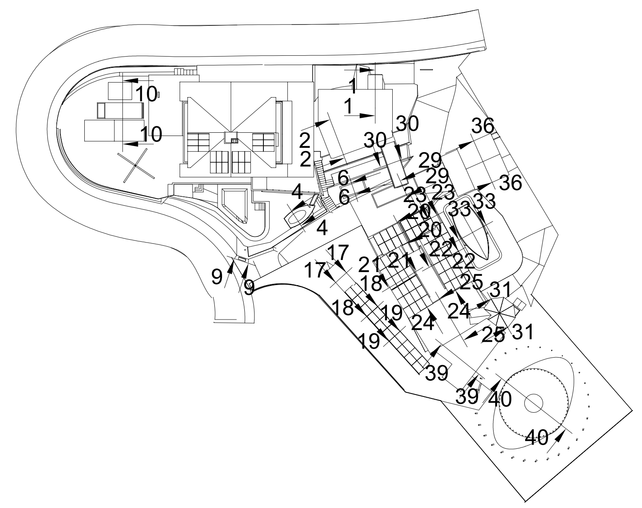

Dept.	Technical reference	Created by		Approved by	
INLICO AG	1:100	Carl Batliner	15.04.2026		
		Document type: Baueingabe		Document status	
		Title: Schnitte Ansicht 2 Gelobtes Land Parzelle 663 & 664		DWG No. 4.2	
			Rev. E	Date of issue 15.04.2026	Sheet 1/1