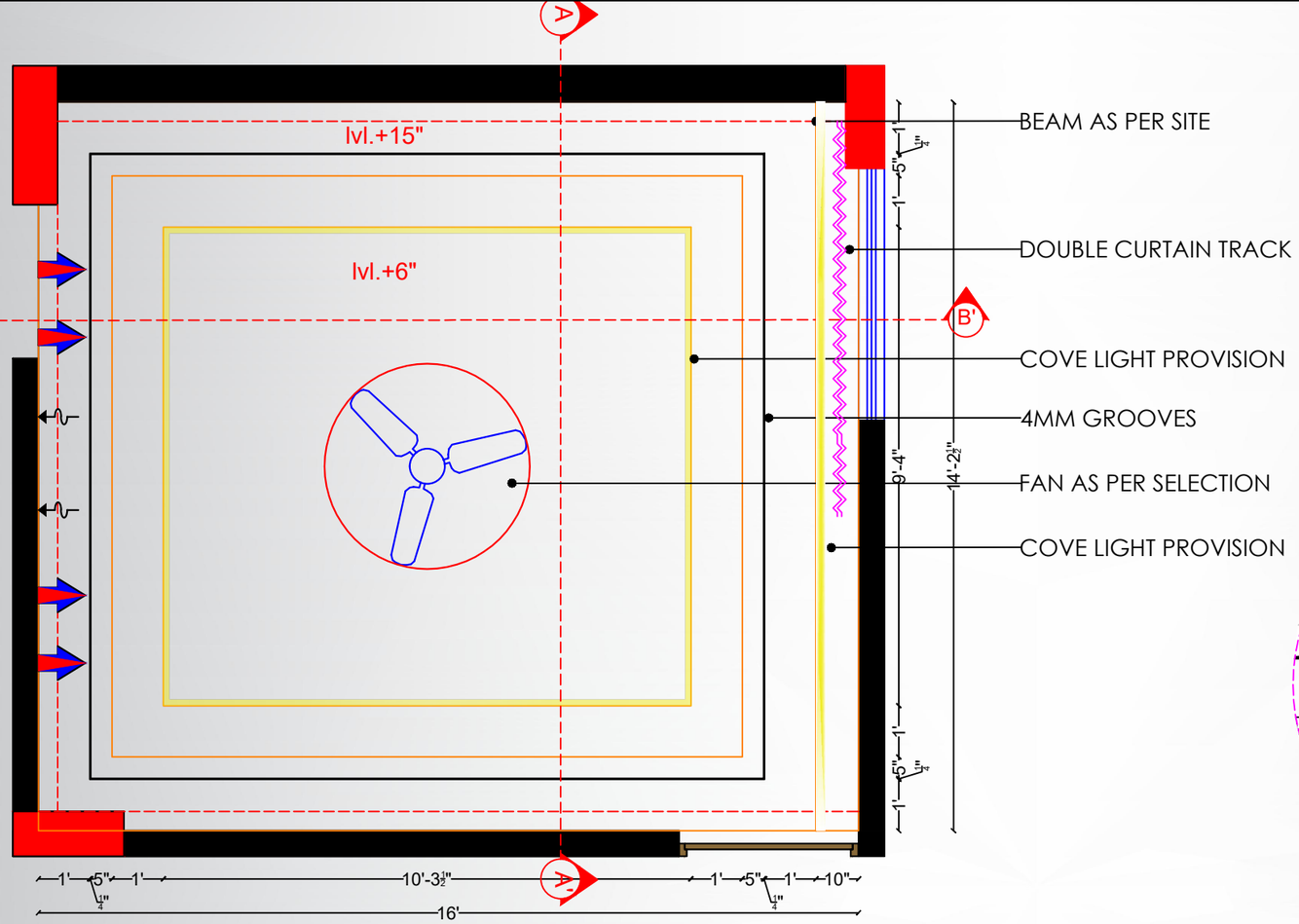

FALSE CEILING- TOP PLAN

REFERENCE IMAGE

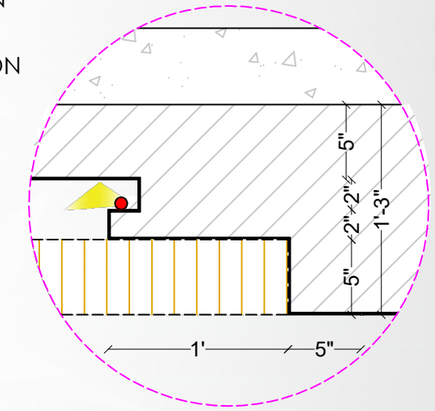

DETAIL A

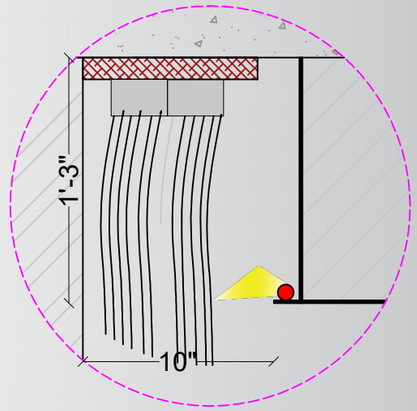

DETAIL B

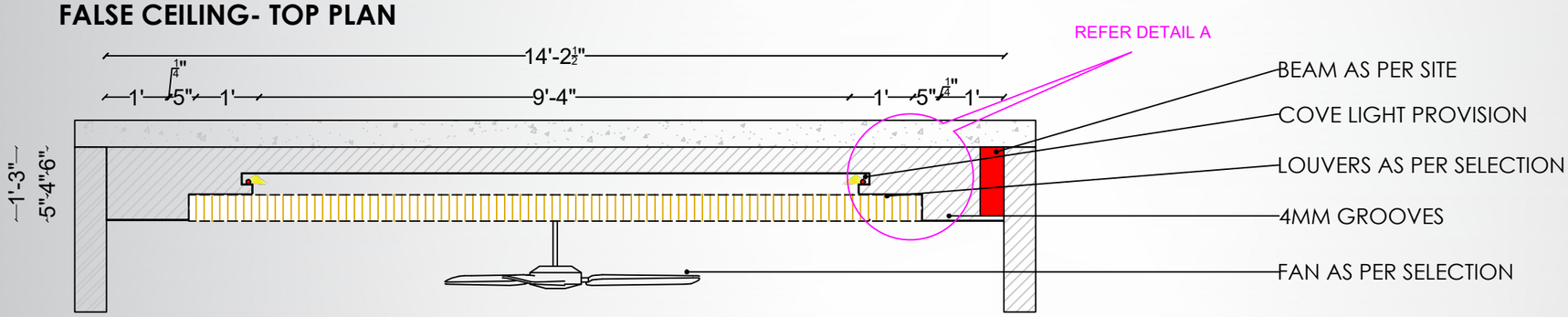

FALSE CEILING- SECTION AA'

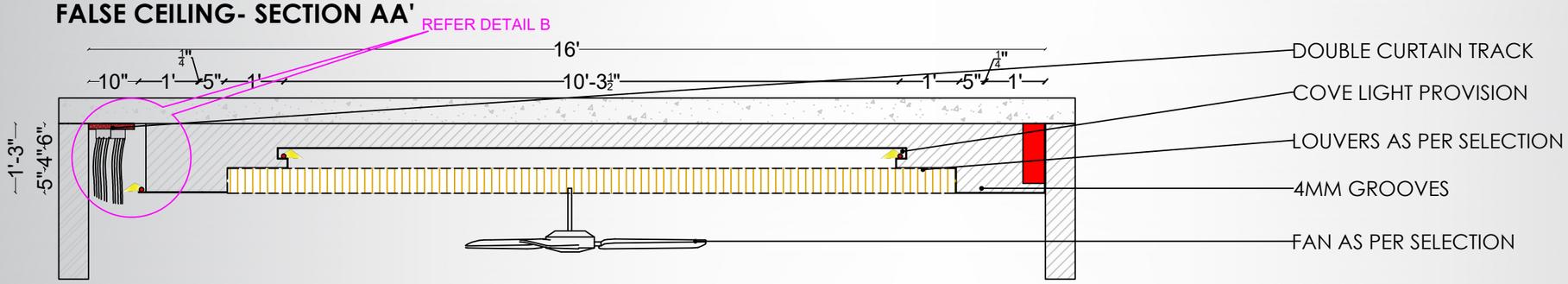

FALSE CEILING- SECTION BB'

MASTER BEDROOM (FALSE CEILING)