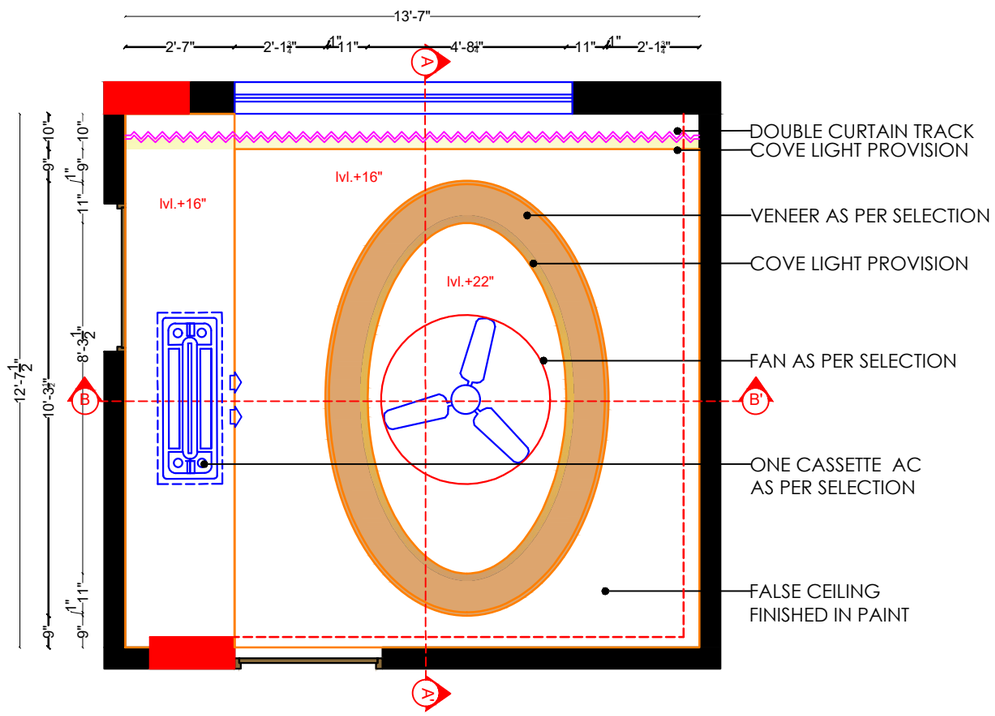

FALSE CEILING- TOP PLAN

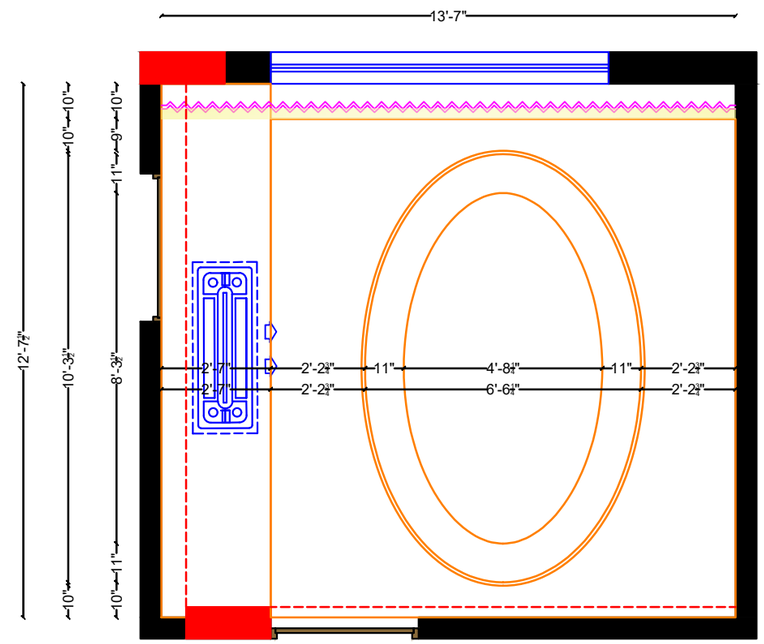

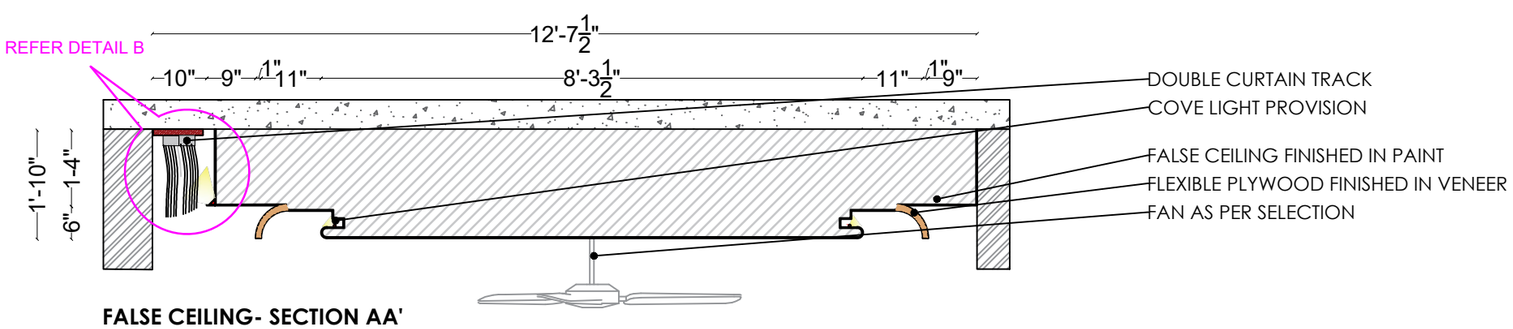

FALSE CEILING- SECTION AA'

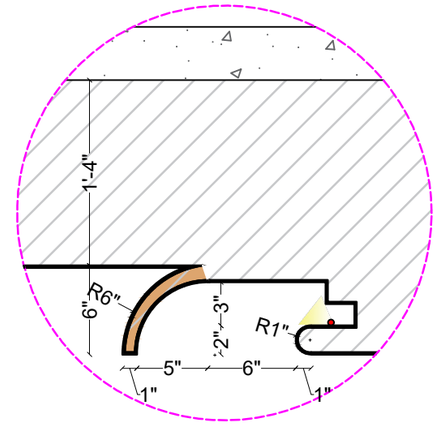

DETAIL A

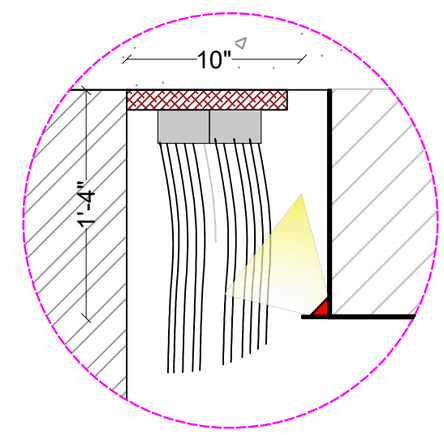

DETAIL B

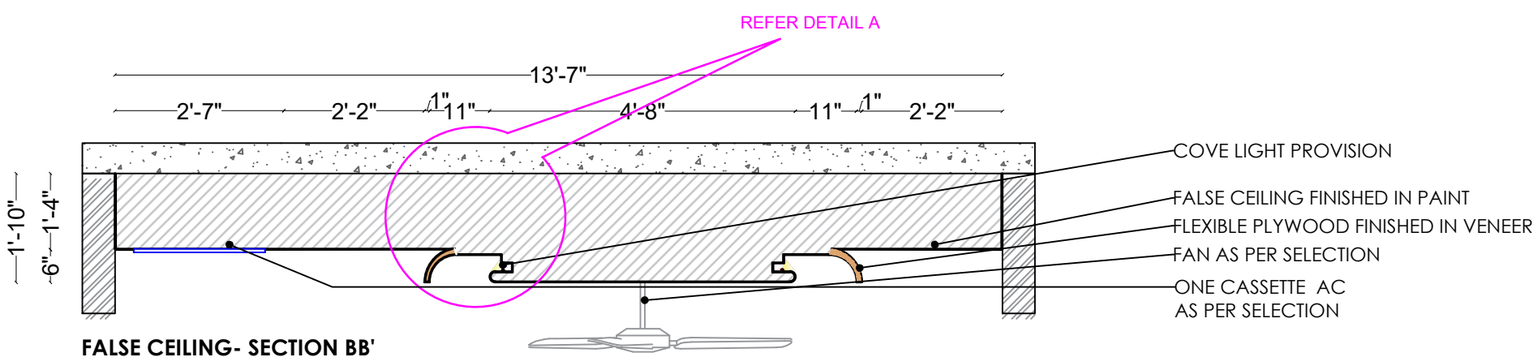

FALSE CEILING- SECTION BB'