YAMAHA

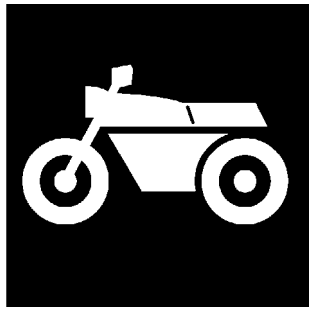

PARTS CATALOGUE
CATALOGO DE REPUESTOS

YBR125ED (1BV3) COLOMBIA

1M1BV-261S1

( )

YAMAHA GENUINE Parts & Accessories

YBR125ED
CATALOGO DE REPUESTOS
©2013 por Yamaha Motor Co., Ltd.
1ª edición, febrero 2013
Todos los derechos reservados.
Toda reproducción o uso no autorizado
sin el consentimiento escrito de
Yamaha Motor Co., Ltd.
quedan expresamente prohibidos
Impreso en Japón.

YBR125ED
PARTS CATALOGUE
©2013 by Yamaha Motor Co., Ltd.
1st edition, February 2013
All rights reserved.
Any reprinting or unauthorized use
without the written permission of
Yamaha Motor Co., Ltd.
is expressly prohibited.
Printed in Japan.

PROLOGO

Este catálogo de repuestos corresponde a las piezas para el o los modelos que figuran en la página de portada. Al formular el pedido de repuestos, se ruega citar este catálogo y especificar correctamente el número y el nombre de las piezas.

1. Las modificaciones y agregados que se hayan realizado después de la edición de este Catálogo de Repuestos, serán anunciados en las Informaciones de Recambios.
   Es recomendable que se hagan las correcciones necesarias en el Catálogo de Repuestos de acuerdo con las Informaciones de Recambios.

2. Abreviaciones
   En este. Catálogo de Repuestos se emplean las siguientes abreviaciones.

   "UR" Usar el número de partes especificado
   "UN" Usar la cantidad necesaria
   "AP" Piezas sustitutivas
   "LM" Fabricación local (Hay que pedir los repuestos en las cercanías)
   "F#" Nº de bastidor (Nº aplicable a la máquina)
   "O/S" Sobredimensionado

3. La cantidad de componentes para el montaje
   - Los componentes, suministrados como conjunto, se describen con un punto (.) que precede al nombre del parte como se indica a continuación.
   - La numeración que aparece a la derecha de cada descripción indica la cantidad de partes por cada unidad de conjunto.

CODIGO Nº	DESCRIPCION	CANT.	OBSERVACIONES
2F5–83310–60	ENSAMBLAJE DE LA LUZ	2	
115–83311–60	.BOMBILLA (6V–18W)	1	

4. Los colores de los componentes se indican como sigue en la columna de "OBSERVACIONES".

CODIGO Nº	DESCRIPCION	CANT.	OBSERVACIONES
2N4–24110–00–X5	COMP. DEL TANQUE	2	MXR
3J1–24240–10	.GRAFICO, DEL TANQUE	1	PARA MXR

5. Debe tenerse en cuenta que las ilustraciones sirven como guia para la búsqueda de los números de partes y no deben usarse para el montaje. Durante el montaje, se recomienda usar el manual de taller correspondiente.

6. EL asterisco (*) antes del número de referencia indica los elementos modificados después de la primera edición.

FOREWORD

This Parts Catalogue is related to the parts for the model(s) on the cover page. When you are ordering replacement parts, please refer to this Parts Catalogue and quote both part numbers and part names correctly.

1. Modifications or additions which have been made after the issue of the Parts Catalogue will be announced in the Parts News.
   It is advisable that you make the necessary corrections to the Parts Catalogue according to the Parts News.

2. Abbreviations
   The following abbreviations are used in this Parts Catalogue.

   “UR” Use specified parts number.
   “UN” Use as many as needed.
   “AP” Alternate Parts
   “LM” Locally Made (Parts need to be ordered locally)
   “F#” Frame No. (Applicable machine No.)
   “O/S” Over Size

3. The number of components for assembly
   - Parts, which are to be supplied in an assembly, are listed with a dot (.) in front of the part name as shown below.
   - The numeral appearing to the right of each component part indicates the quantity of parts for each assembly unit.

PART NO.	DESCRIPTION	Q’TY	REMARKS
2F5–83310–60	FRONT FLASHER LIGHT ASSY	2	
115–83311–60	.BULB (6V–18W)	1	

4. Applicable colours of graphics are represented in the “REMARKS” as shown below.

PART NO.	DESCRIPTION	Q’TY	REMARKS
2N4–24110–00–X5	FUEL TANK COMP.	2	MXR
3J1–24240–10	.GRAPHIC, FUEL TANK	1	FOR MXR

5. Note that the illustrations for reference in finding parts numbers are not to be used for assembling. When assembling, please use the applicable service manual.

6. The asterisk (*) before a reference number indicates modified items after the first edition.

7. Números de serie

Nº de Serie del bastidor

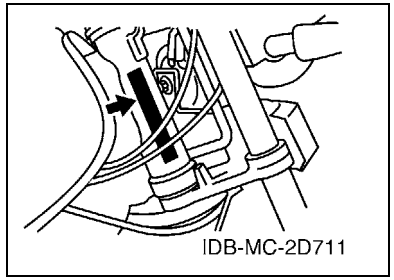

Nº de Serie del motor

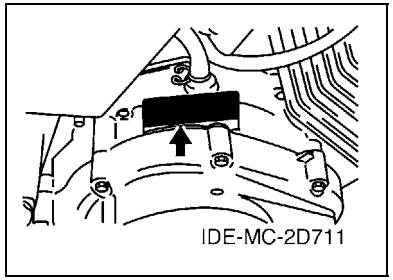

8. Códigos de color aplicables (El símbolo (*) muestra el color de modelo.)

Abreviatura	Nombre de color	Código de color
DPBMC(*)	DEEP PURPLISH BLUE METALLIC C	0564
SMX(*)	BLACK METALLIC X	0903
SW(*)	SILKY WHITE	00GE
VRC7(*)	VIVID RED COCKTAIL 7	0580
YB	YAMAHA BLACK	0033

9. Nº de serie inicial aplicable

Nº de Serie del bastidor

Nº de serie	Nombre de la columna de cantidades	Código de Modelo

Nº de Serie del motor

Nº de serie	Nombre de la columna de cantidades	Código de Modelo

7. Applicable Serial No.

Frame Serial No.

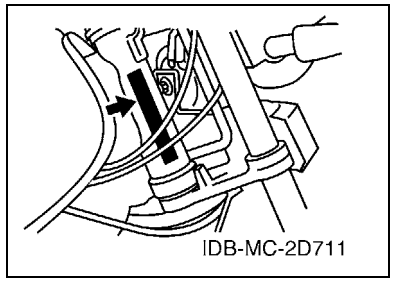

Engine Serial No.

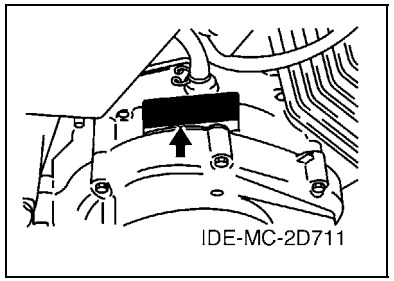

8. Applicable Colour Code (The (*) mark shows Model colour.)

Abbreviation	Colour Name	Colour Code
DPBMC(*)	DEEP PURPLISH BLUE METALLIC C	0564
SMX(*)	BLACK METALLIC X	0903
SW(*)	SILKY WHITE	00GE
VRC7(*)	VIVID RED COCKTAIL 7	0580
YB	YAMAHA BLACK	0033

9. Applicable Starting Serial No.

Frame Serial No.

Serial No.	Name Of Q'ty Column	Model Code

Engine Serial No.

Serial No.	Name Of Q'ty Column	Model Code

CONTENIDO

MOTOR

CILINDRO 1
CIGUENAL & PISTON 2
VALVULA 3
ARBOL DE LEVAS & CADENA 4
BOMBA DE ACEITE 5
ADMISION 6
CARBURADOR 7
DESCARGA 8
CARTER 9
CUBIERTA DE CARTER 1 10
ARRANQUE 11
EMBRAGUE DEL ARRANQUE 12
EMBRAGUE 13
TRANSMISION 14
LEVA DE CAMBIO & HORQUILLA 16
EJE DE CAMBIO & PEDAL 17

SHASIS

CUADRO 18
GUARDABARRO 19
CUBIERTA LATERAL 20
BRAZO TRASERO & SUSPENSION 21
DIRECCION 22
HORQUILLA DELANTERA 23
DEPOSITO DE COMBUSTIBLE 25
ASIENTO 27
RUEDA DELANTERA 28
CALIBRE FRENO DELANTERA 29
RUEDA TRASERA 30
MANILLAR & CABLE 32
CILINDRO MAESTRO DELANTERO 33
SOPORTE & APOYAPIE 34
GENERADOR 36
MOTOR DE ARRANQUE 37
LUZ DE DESTELLADOR 38
MEDIDOR 39
FARO DELANTERO 40
LUZ DE COLA 41
INTERRUPTOR DE MANILLAR&PALANC 42
EQUIPO ELECTRICO 1 43
EQUIPO ELECTRICO 2 44

INDICE

INDICE NUMERICO 45

CONTENTS

ENGINE

CYLINDER 1
CRANKSHAFT & PISTON 2
VALVE 3
CAMSHAFT & CHAIN 4
OIL PUMP 5
INTAKE 6
CARBURETOR 7
EXHAUST 8
CRANKCASE 9
CRANKCASE COVER 1 10
STARTER 11
STARTER CLUTCH 12
CLUTCH 13
TRANSMISSION 14
SHIFT CAM & FORK 16
SHIFT SHAFT 17

CHASSIS

FRAME 18
FENDER 19
SIDE COVER 20
REAR ARM & SUSPENSION 21
STEERING 22
FRONT FORK 23
FUEL TANK 25
SEAT 27
FRONT WHEEL 28
FRONT BRAKE CALIPER 29
REAR WHEEL 30
STEERING HANDLE & CABLE 32
FRONT MASTER CYLINDER 33
STAND & FOOTREST 34
GENERATOR 36
STARTING MOTOR 37
FLASHER LIGHT 38
METER 39
HEADLIGHT 40
TAILLIGHT 41
HANDLE SWITCH & LEVER 42
ELECTRICAL 1 43
ELECTRICAL 2 44

INDEX

NUMERICAL INDEX 45

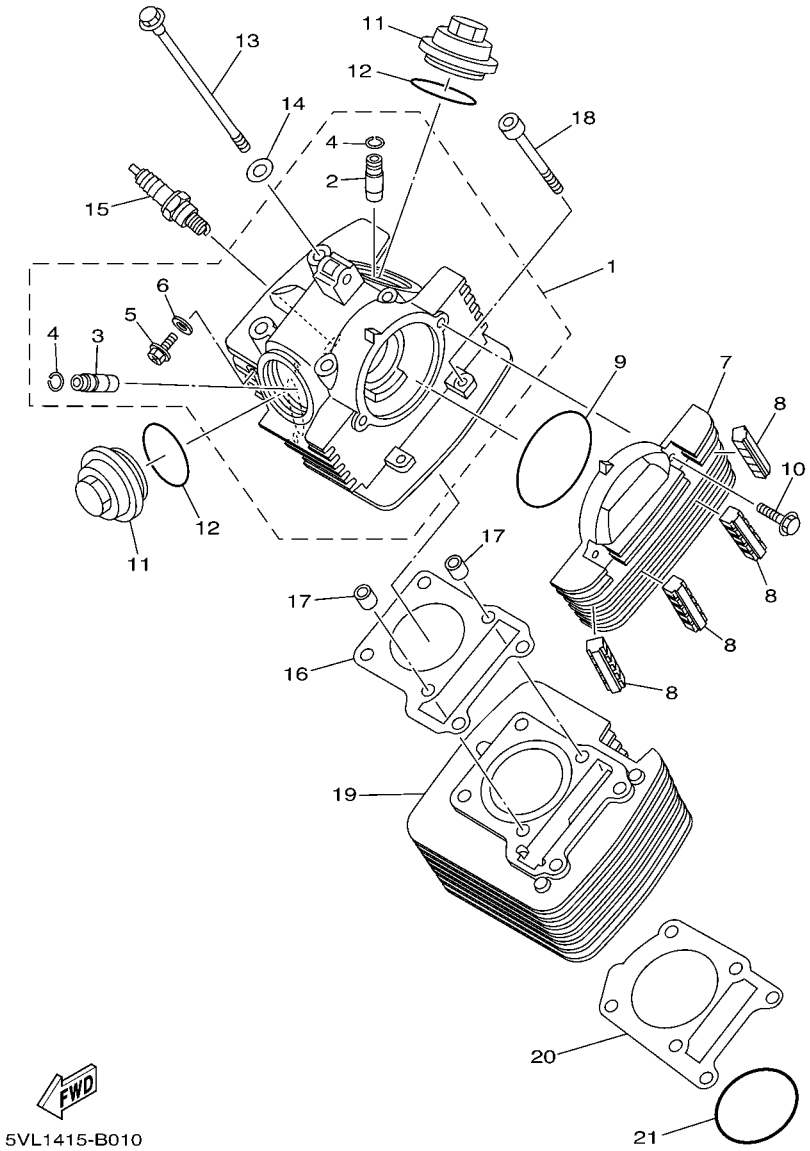

FIG. 1 CILINDRO — CYLINDER

REF. Nº	CODIGO Nº PART NO.	DESCRIPCION DESCRIPTION	1BV3					OBSERVACIONES REMARKS
1	5VL–E1111–01	CULATA CILINDRO 1 HEAD, CYLINDER 1	1					
2	2UJ–11133–10	.GUIA DE VALVULA 1 .GUIDE, VALVE 1	1					
3	22F–11134–10	.GUIA DE VALVULA 2 .GUIDE, VALVE 2	1					
4	93440–10109	.SEGURO .CIRCLIP	2					
5	90153–06803	.TORNILLO HEXAGONAL .SCREW, HEXAGON	1					
6	90430–06817	.JUNTA .GASKET	1					
7	5VL–E1185–00	CUBIERTA CULATA CIL.LAT.3 COVER, CYLINDER HEAD SIDE 3	1					
8	5VL–E1161–00	AMORTIGUADOR 1 ABSORBER 1	4					
9	93210–71801	ANILLO O O-RING	1					
10	95022–06020	PERNO, DE BRIDA BOLT, FLANGE	2					
11	5VL–E1186–00	CUBIERTA CULATA CIL.LAT.2 COVER, CYLINDER HEAD SIDE 2	2					
12	93210–44889	ANILLO O O-RING	2					
13	90105–08724	TORNILLO BOLT, FLANGE	4					
14	90201–088C3	ARANDELA PLANA WASHER, PLATE	4					
15	94700–00869	BUJIA (NGK CR6HSA) PLUG SPARK (NGK CR6HSA)	1					
16	5VL–E1181–00	JUNTA, DE CULATA 1 GASKET, CYLINDER HEAD 1	1					
17	99530–10114	PASADOR, DE ESPIGA PIN, DOWEL	2					
18	91312–06090	TORNILLO BOLT	2					
19	5VL–E1310–00	CILINDRO CYLINDER	1					
20	5VL–E1351–10	JUNTA, DE CILINDRO GASKET, CYLINDER	1					
21	93210–57897	ANILLO O O-RING	1					

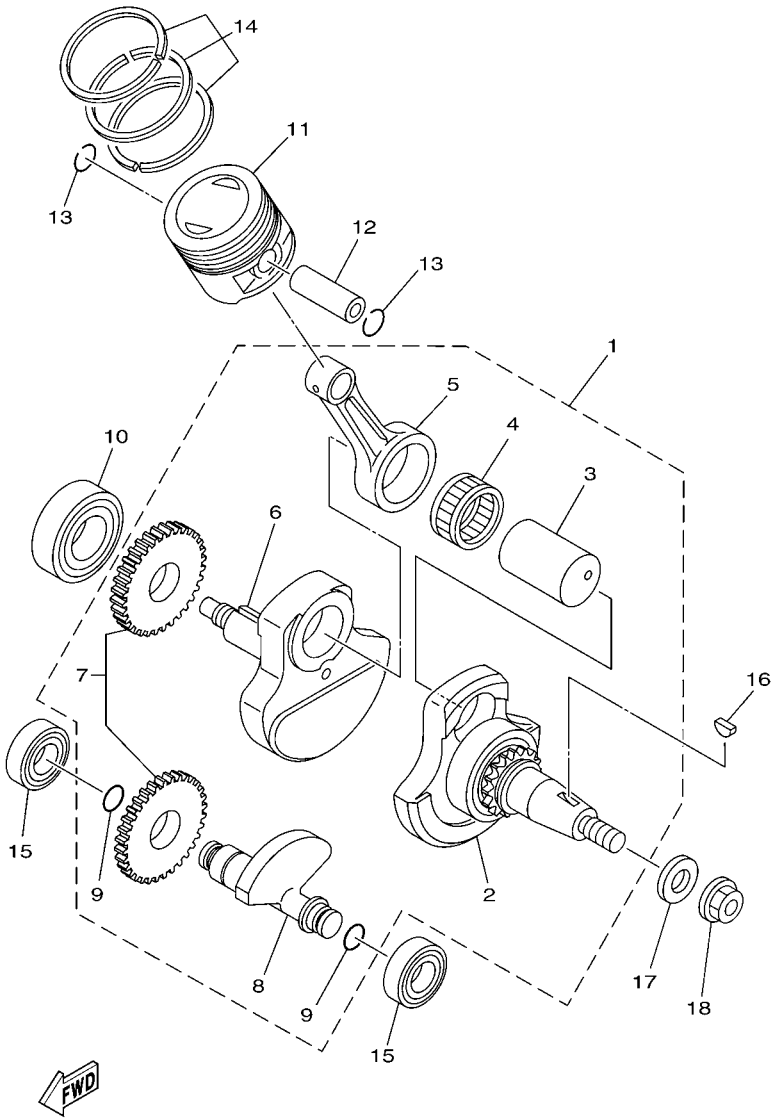

4P26200-G020

FIG. 2 CIGUENAL & PISTON — CRANKSHAFT & PISTON

REF. Nº	CODIGO Nº PART NO.	DESCRIPCION DESCRIPTION	1BV3					OBSERVACIONES REMARKS
1	2D0–W1140–00	CIGUENAL COMPLETO CRANKSHAFT ASSY	1					
2	2D0–W1141–00	.MANIVELA SEMI-ARMADA 1 .CRANK SUB ASSY 1	1					
3	5VL–E1681–00	.PASADOR MANIVELA 1 .PIN, CRANK 1	1					
4	93310–629Y3	.COJINETE DE RODILLOS .BEARING	1					
5	5VL–E1651–00	.BIELA .ROD, CONNECTING	1					
6	5VL–E1422–00	.MANIVELA 2 .CRANK 2	1					
7	5VL–Y1153–00	.ENGRANAJE TRACCION .GEAR, BALANCE WEIGHT ASSY.	1					
8	5VL–E1454–00	.PESO 1 .WEIGHT 1	1					
9	93210–11800	.ANILLO O .O-RING	2					
10	93306–205XJ	COJINETE BEARING	1					
11	5VL–E1631–00	PISTON (NORMA) PISTON (STD)	1					
12	5VL–E1633–00	PASADOR, PISTON PIN, PISTON	1					
13	93450–16812	SEGURO CIRCLIP	2					
14	5VL–Y1161–00	JUEGO DE ANILLOS (NORMA) PISTON RING SET (STD)	1					
15	93306–202XN	COJINETE BEARING	2					
16	90280–03017	CUNA WOODRUFF KEY, WOODRUFF	1					
17	90201–122H1	ARANDELA PLANA WASHER, PLATE	1					
18	90179–12863	TUERCA NUT	1					

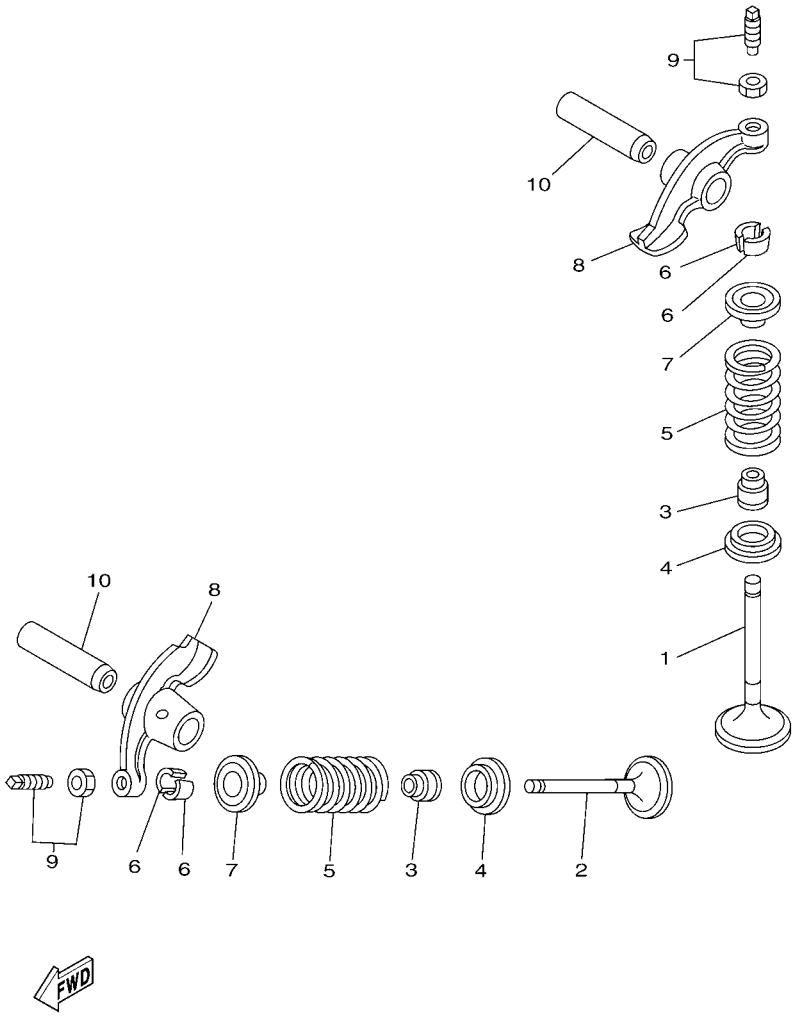

FIG. 3 VALVULA VALVE

REF. Nº	CODIGO Nº PART NO.	DESCRIPCION DESCRIPTION	1BV3					OBSERVACIONES REMARKS
1	5VL–E2111–00	VALVULA DE ADMISION VALVE, INTAKE	1					
2	5VL–E2121–00	VALVULA DE ESCAPE VALVE, EXHAUST	1					
3	5VL–E2119–00	SELLO DE ACEITE VALVULA SEAL, VALVE STEM	2					
4	5VL–E2116–01	ASIENTO RESORTE DE VALVULA SEAT, VALVE SPRING	2					
5	5KA–12113–00	RESORTE VALVULA INTERNA SPRING, VALVE INNER	2					
6	5VL–E2118–00	SEGURO DE VALVULA LOCK, VALVE SPRING RETAINER	4					
7	5VL–E2117–01	RETEN RESORTE DE VALVULA RETAINER, VALVE SPRING	2					
8	5VL–E2151–00	BRAZO DE BALANCIN DE VALVULA ARM, VALVE ROCKER	2					
9	5VL–Y1215–00	TORNILLO DE AJUSTE DE VALVULA SCREW, VALVE ADJUSTING	2					
10	5VL–E2156–00	EJE DE BALANCIN SHAFT, ROCKER 2	2					

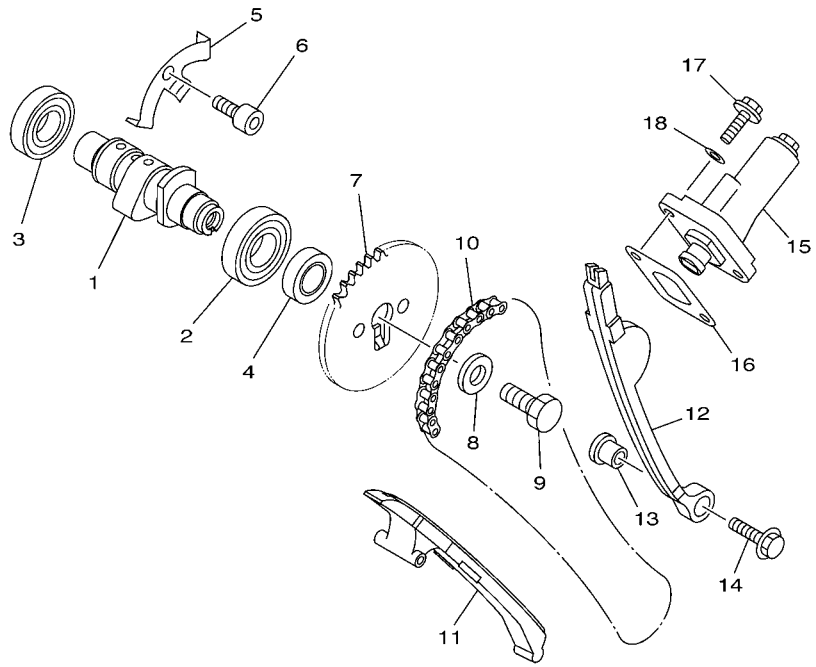

5VL1415-B040

FIG. 4 ARBOL DE LEVAS & CADENA CAMSHAFT & CHAIN

REF. Nº	CODIGO Nº PART NO.	DESCRIPCION DESCRIPTION	1BV3					OBSERVACIONES REMARKS
1	5VL–E2171–00	ARBOL DE LEVAS 1 CAMSHAFT 1	1					
2	93306–003X6	COJINETE BEARING	1					
3	93306–002YU	COJINETE BEARING	1					
4	90387–167L5	ESPACIADOR COLLAR	1					
5	5VL–E111F–00	PLACA PLATE	1					
6	91312–06012	TORNILLO BOLT	1					
7	5VL–E2176–00	CATALINA DE CADENA (34T) SPROCKET, CAM CHAIN (34T)	1					
8	90201–08326	ARANDELA PLANA WASHER, PLATE	1					
9	90101–08820	TORNILLO BOLT	1					
10	94568–C1088	CADENA CHAIN	1					
11	5VL–E2231–00	TOPE DE GUIA 1 GUIDE, STOPPER 1	1					
12	5VL–E2241–00	TOPE DE GUIA 2 GUIDE, STOPPER 2	1					
13	5VL–E5598–00	COLLAR COLLAR	1					
14	95802–06020	TORNILLO DE REBORDE BOLT, FLANGE	1					
15	5VL–E2210–01	TENSOR CADENA DE LEVA TENSIONER ASSY, CAM CHAIN	1					
16	5VL–E2213–10	EMPAQUE DE CAJA TENSOR GASKET, TENSIONER CASE	1					
17	95022–06016	PERNO, DE BRIDA BOLT, FLANGE	2					
18	90430–06817	JUNTA GASKET	2					

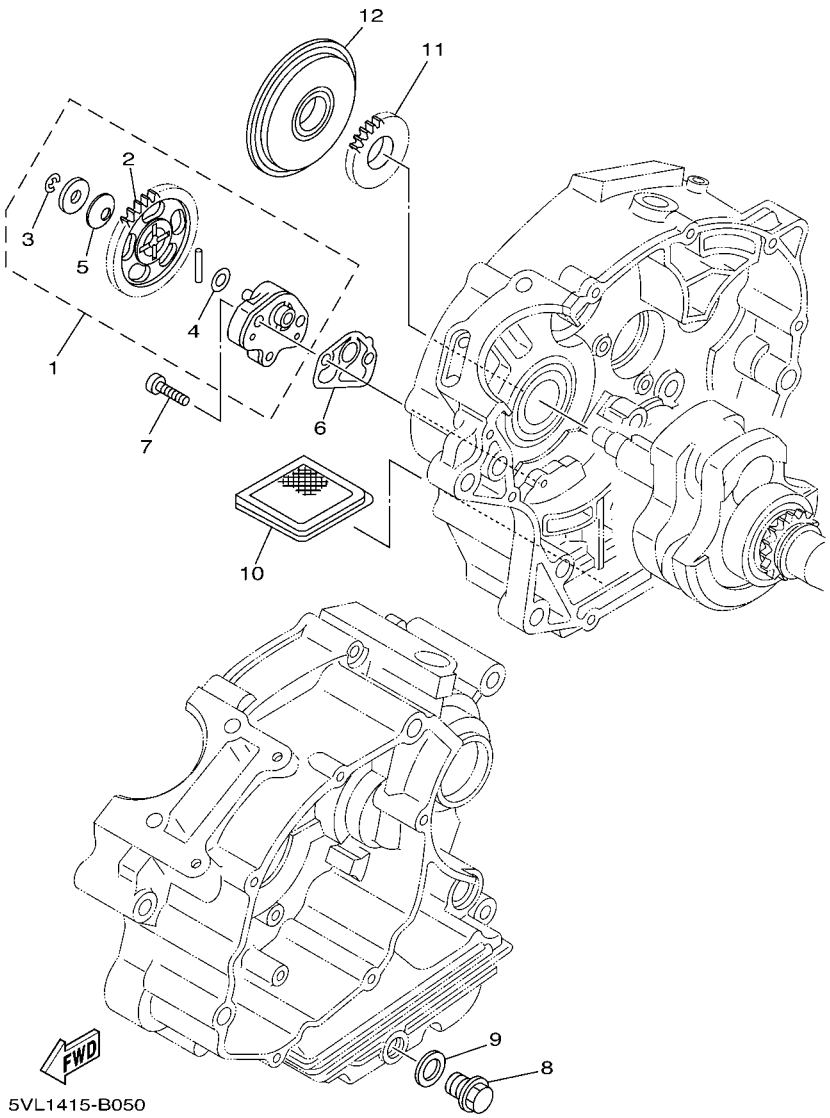

FIG. 5 BOMBA DE ACEITE OIL PUMP

REF. Nº	CODIGO Nº PART NO.	DESCRIPCION DESCRIPTION	1BV3					OBSERVACIONES REMARKS
1	5VL–E3300–01	BOMBA DE ACEITE COMPLETA OIL PUMP ASSY	1					
2	5VL–E3325–00	.ENGRANAJE IMPULSOR DE BOMBA 1 .GEAR, PUMP DRIVEN	1					
3	99002–05600	.PRESILLA REDONDA .CLIP	1					
4	90201–07641	.ARANDELA PLANA .WASHER, PLATE	1					
5	90208–07052	.ARANDELA DE RESORTE CONICO .WASHER, CONICAL SPRING	1					
6	5VL–E3329–00	EMPAQUE TAPA DE BOMBA GASKET, PUMP COVER	1					
7	90155–06800	TORNILLO CABEZA PLANA RAN. SCREW, FLAT FILLISTER	2					
8	90340–12097	TORNILLO, DE DRENAJE PLUG, STRAIGHT SCREW	1					
9	90430–12227	JUNTA GASKET	1					
10	4FP–E3411–00	FILTRO DE ACEITE STRAINER, OIL	1					
11	5VL–E3324–00	ENGRANAJE TRACC. DE BOMBA GEAR, PUMP DRIVE	1					
12	5VL–E3451–00	FILTRE ROTATIVO FILTER,ROTARY	1					

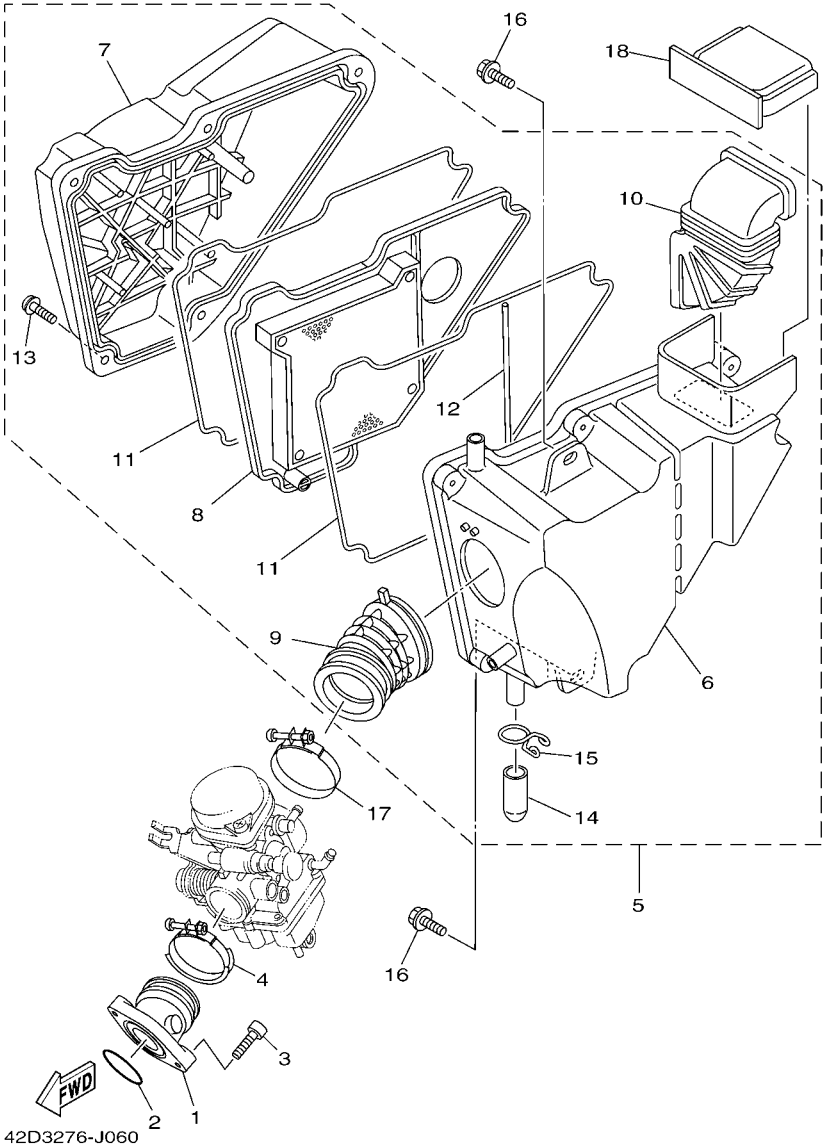

FIG. 6 ADMISION INTAKE

REF. Nº	CODIGO Nº PART NO.	DESCRIPCION DESCRIPTION	1BV3					OBSERVACIONES REMARKS
1	4P2–E3586–00	TOBERA DE CARBURADOR 1 JOINT, CARBURETOR 1	1					
2	93210–30611	ANILLO O O-RING	1					
3	91312–06025	TORNILLO BOLT	2					
4	90450–44804	BRIDA, MANGUERA HOSE CLAMP ASSY	1					
5	4P2–Y1441–01	FILTRO DE AIRE COMPLETO AIR CLEANER ASSY.	1					
6	5VL–E4411–00	.CAJA FILTRO DEL AIRE 1 .CASE, AIR CLEANER 1	1					
7	5VL–E4412–00	.TAPA CAJA DEL FILTRO 1 .CAP, CLEANER CASE 1	1					
8	5VL–E4450–01	.ELEMENTO COMP.FILTRO DE AIRE .ELEMENT ASSY, AIR CLEANER	1					
9	4P2–E4453–00	.UNION DEL FILTRO DEL AIRE 1 .JOINT, AIR CLEANER 1	1					
10	5VL–E4437–00	.CONDUCTO .DUCT	1					
11	5VL–E4452–00	.SELLO .SEAL	2					
12	5VL–E4462–00	.SELLO .SEAL	1					
13	97602–06220	.TORNILLO CON RONDONA .SCREW, PAN HEAD W/WASHER	5					
14	5VL–E443E–00	.TUBO, DRENAJE .PIPE, DRAIN	1					
15	5VL–E4424–01	.PRESILLA ACCESORIO DE TAPA .CLIP, CAP FITTING	1					
16	90119–06869	TORNILLO CON ARANDELA BOLT, WITH WASHER	2					
17	90450–51802	BRIDA, MANGUERA HOSE CLAMP ASSY	1					
18	5VL–E4417–00	CUBIERTA 1 COVER 1	1					

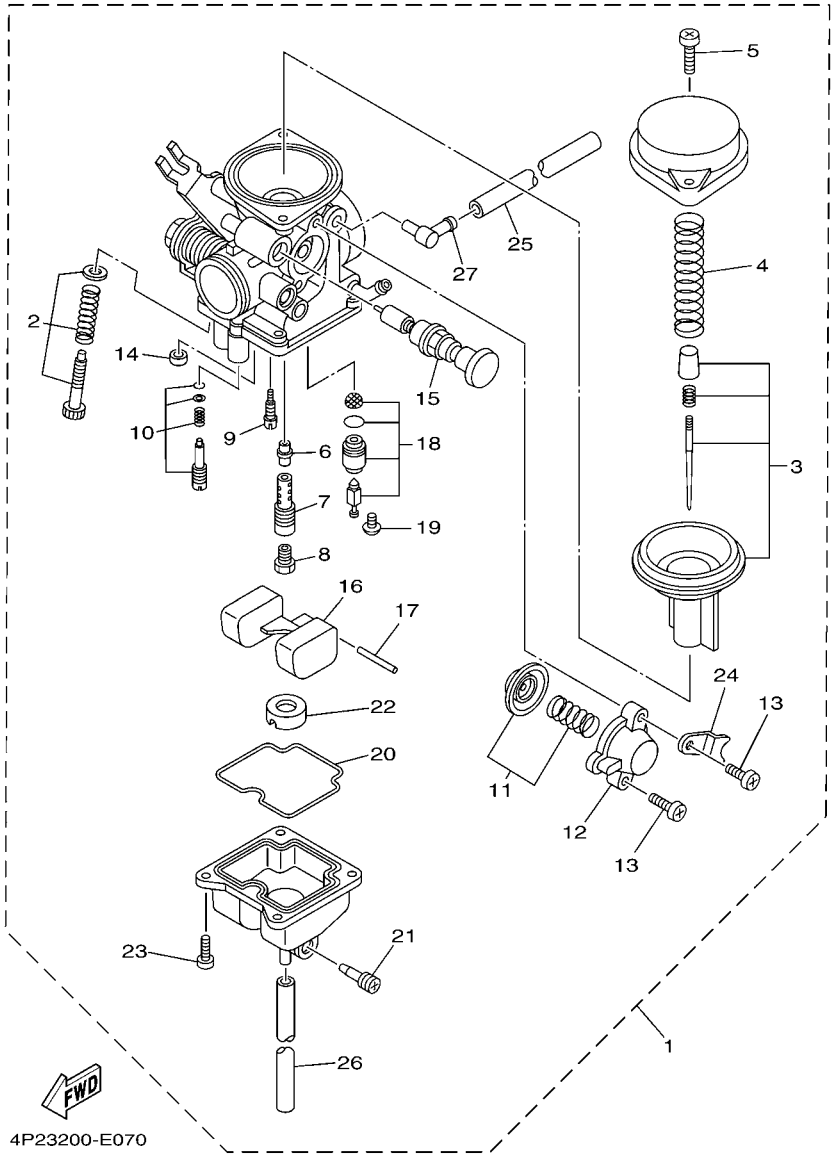

FIG. 7 CARBURADOR CARBURETOR

REF. Nº	CODIGO Nº PART NO.	DESCRIPCION DESCRIPTION	1BV3					OBSERVACIONES REMARKS
1	1BV–E4301–10	CARBURADOR COMPLETO 1 CARBURETOR ASSY 1	1					
2	4P2–W149K–00	.CJTO. TORNILLO DEL RALENTI .THROTTLE SCREW SET	1					
3	4P2–W149J–00	.CJTO. AGUJA .NEEDLE SET	1					
4	4P2–E4286–00	.RESORTE .SPRING	1					
5	5LB–E4214–00	.TORNILLO DE CABEZA CON PLANA .SCREW, PAN HEAD	2					
6	5RS–E4341–00	.BOQUILLA PRINCIPAL .NOZZLE, MAIN	1					
7	5RS–E4341–10	.BOQUILLA PRINCIPAL .NOZZLE, MAIN	1					
8	288–E4343–56	.INYECTOR PRINCIPAL (#112) .JET, MAIN (#112)	1					
9	5LB–E4342–17	.ESPREA DE PILOTO (# 34) .JET, PILOT (# 34)	1					
10	4P2–W1415–00	.TORNILLO DE PILOTO .PILOT SCREW SET	1					
11	4P2–W149A–00	.CONTROL REMOTO .DIAPHRAGM SET 1	1					
12	5LB–E4293–00	.CUBIERTA .COVER 1	1					
13	97801–04010	.TORNILLO DE MUESCA .SCREW, PAN HEAD	2					
14	50M–E4355–00	.ASIENTO .NOZZLE, MAIN 2	1					
15	4P2–E4371–00	.EMBOLO DE ARRANQUE .PLUNGER, STARTER	1					
16	5LB–E4385–00	.BOIA .FLOAT	1					
17	5LB–E4386–00	.PASADOR DE BOIA .PIN, FLOAT	1					
18	1BV–E4390–00	.VALVULA DE AGUJA COMPLETA .NEEDLE VALVE ASSY	1					
19	30S–14325–00	.TORNILLO CABEZA REDONDA .SCREW, PAN HEAD	1					
20	5LB–E4384–00	.EMPAQUE DE CAMARA DE BOIA .GASKET, FLOAT CHAMBER	1					
21	4JP–E4323–00	.TORNILLO DE AJUSTE DE AIRE .SCREW, AIR ADJUSTING	1					
22	5LB–E4153–00	.PLACA,BAFFLE .PLATE,BAFFLE	1					
23	5LB–E4592–00	.TORNILLO .SCREW	4					
24	5LB–E4292–00	.SOPORTE 2 .BRACKET 2	1					
25	4P2–E4197–00	.TUBO RESPIRADERO .PIPE	1					
26	1PX–E4196–00	.TUBO DE DRENASE .PIPE, OVER FLOW 1	1					
27	5FY–E4251–00	.NIPLE .NIPPLE	1					

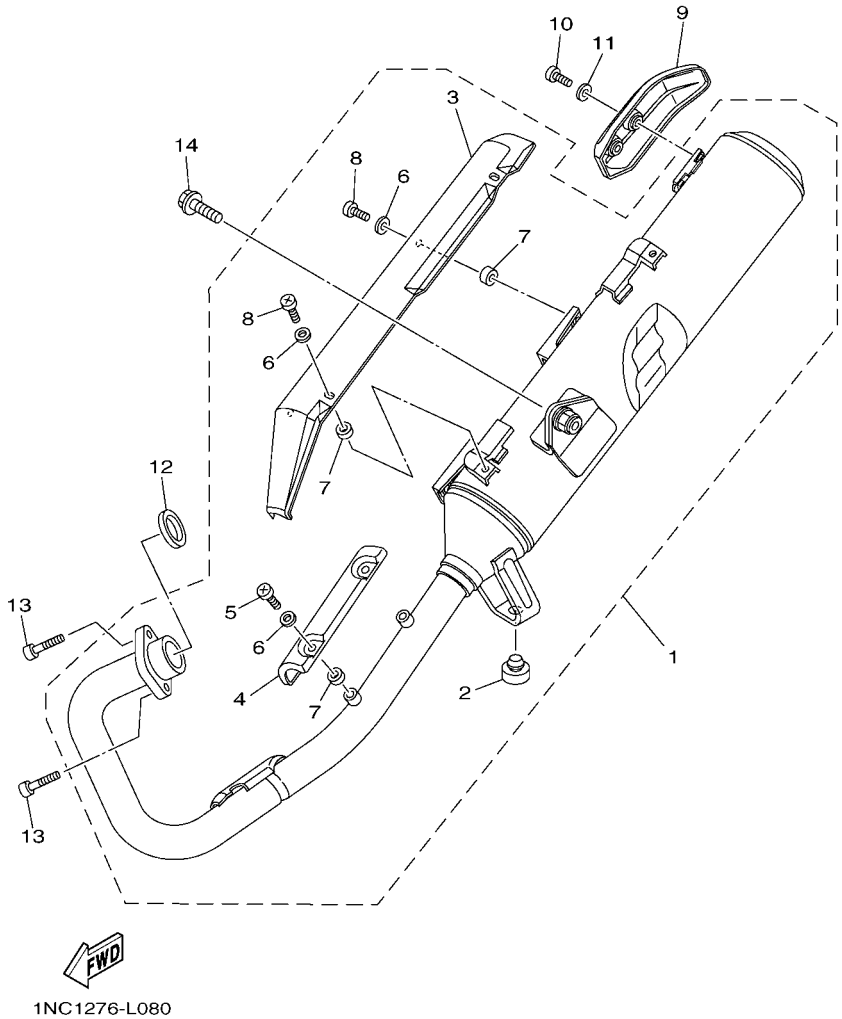

FIG. 8 DESCARGA EXHAUST

REF. Nº	CODIGO Nº PART NO.	DESCRIPCION DESCRIPTION	1BV3					OBSERVACIONES REMARKS
1	1PX–E4710–00	TUBO DE ESCAPE COMPLETO 1 MUFFLER ASSY 1	1					
2	4TU–F4741–00	.COJIN DE ASIENTO .PAD, SEAT	1					
3	5VL–E4758–00	.PROTECTOR DE SILENCIADOR .PROTECTOR, SILENCER	1					
4	5VL–E4628–00	.PROTECTOR DE TUBO DE ESCAPE .PROTECTOR, EXHAUST PIPE	1					
5	98980–06012	.TORNILLO DE LIGAR .SCREW, BIND	2					
6	90201–05803	.ARANDELA PLANA .WASHER, PLATE	6					
7	90201–05804	.ARANDELA PLANA .WASHER, PLATE	6					
8	98980–06014	.TORNILLO DE LIGAR .SCREW, BIND	4					
9	1PX–E4738–00	PROTECTOR DE SILENCIADOR 3 PROTECTOR, MUFFLER 3	1					
10	98980–06014	TORNILLO DE LIGAR SCREW, BIND	2					
11	92990–06200	ARANDELA PLANA WASHER, PLAIN	2					
12	5VL–E4613–00	JUNTA, TUBO DE ESCAPE GASKET, EXHAUST PIPE	1					
13	91312–06020	TORNILLO BOLT	2					
14	95812–08020	TORNILLO DE REBORDE BOLT, FLANGE	1					

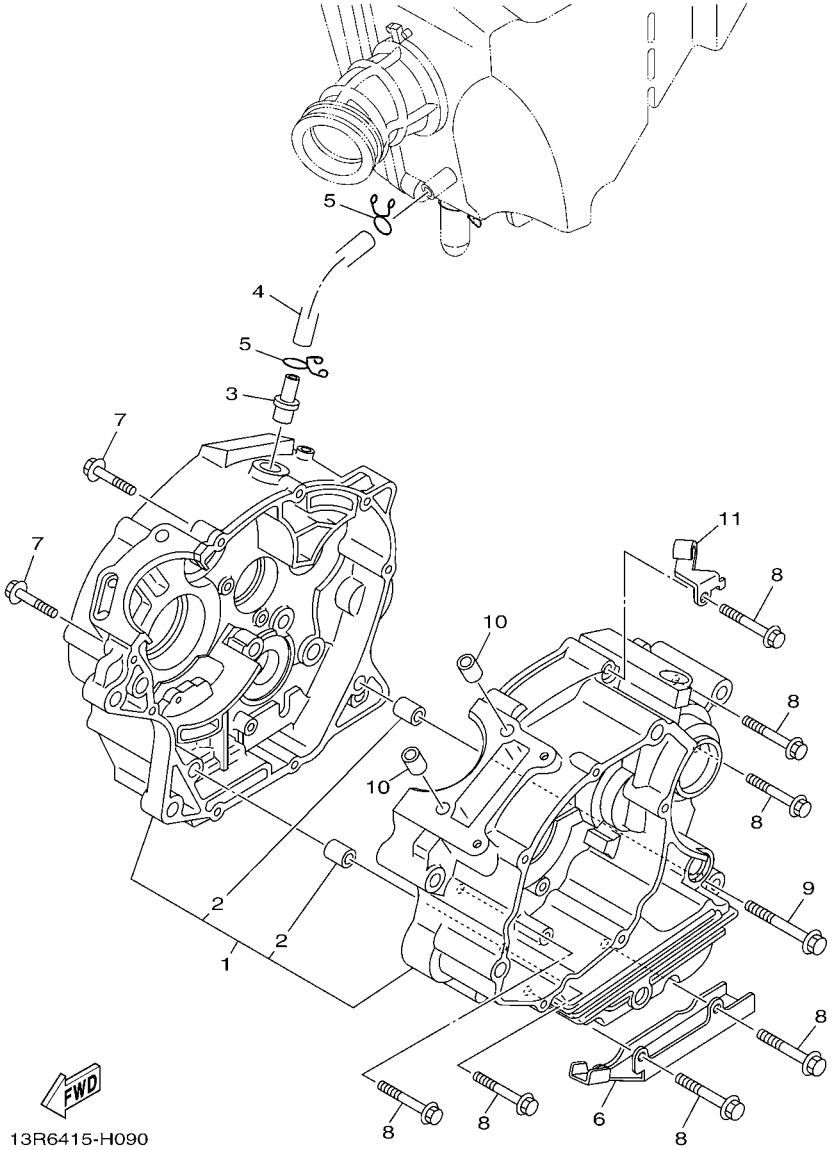

FIG. 9 CARTER — CRANKCASE

REF. Nº	CODIGO Nº PART NO.	DESCRIPCION DESCRIPTION	1BV3					OBSERVACIONES REMARKS
1	5VL–W1510–11	CARTER COMPLETO CRANKCASE ASSY	1					
2	99530–10114	.PASADOR, DE ESPIGA .PIN, DOWEL	2					
3	4FP–E1167–00	CUBIERTA RESPIRADERO 2 PIPE, BREATHER 2	1					
4	5VL–E1166–00	TUBO RESPIRADERO 1 PIPE, BREATHER 1	1					
5	90467–12828	PRESILLA CLIP	2					
6	90462–16801	BRIDA CLAMP	1					
7	95022–06030	PERNO, DE BRIDA BOLT, FLANGE	2					
8	95022–06045	PERNO, DE BRIDA BOLT, FLANGE	7					
9	95022–06055	PERNO, DE BRIDA BOLT, FLANGE	1					
10	99530–10114	PASADOR, DE ESPIGA PIN, DOWEL	2					
11	5VL–E5441–00	SOSTEN DE CABLE DE EMBRAGUE HOLDER, CLUTCH CABLE	1					

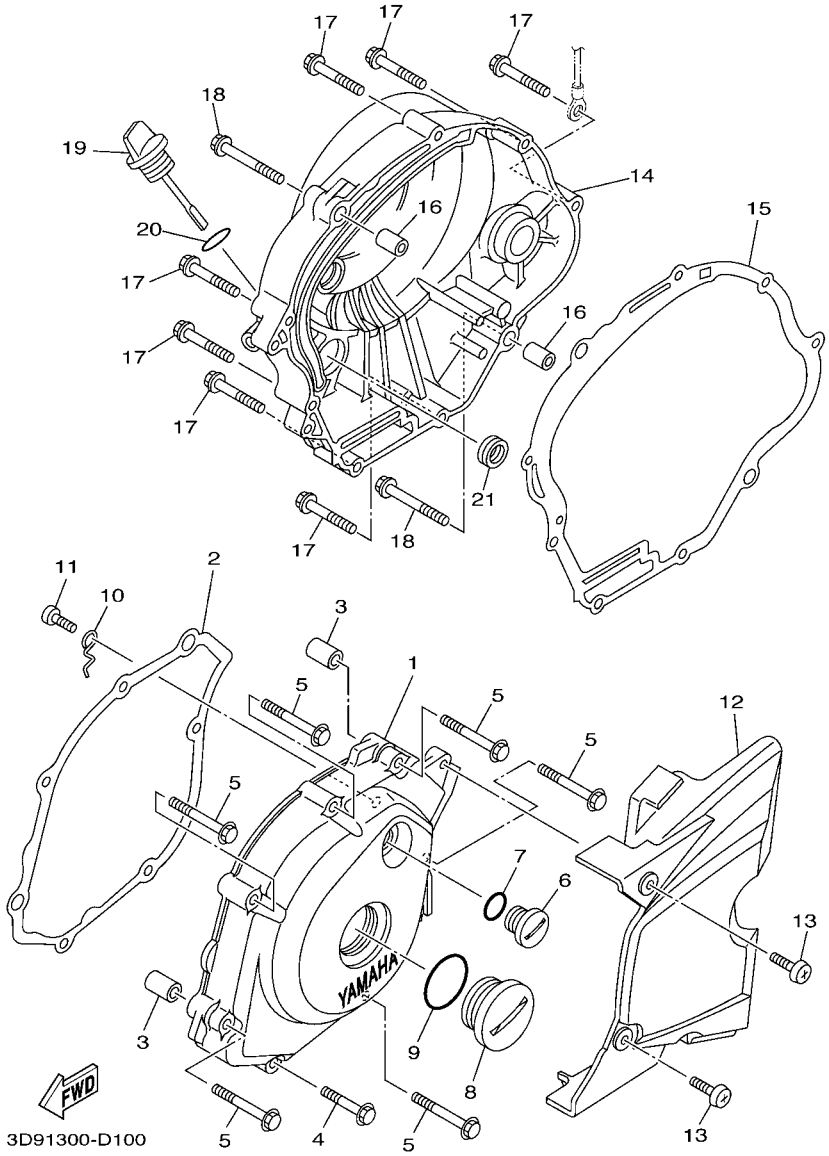

FIG. 10 CUBIERTA DE CARTER 1 CRANKCASE COVER 1

REF. Nº	CODIGO Nº PART NO.	DESCRIPCION DESCRIPTION	1BV3					OBSERVACIONES REMARKS
1	5VL–E5411–10	CUBIERTA DE CARTER 1 COVER, CRANKCASE 1	1					
2	5VL–E5451–10	EMPAQ DE CUBIERTA DE CARTER GASKET, CRANKCASE COVER 1	1					
3	99530–10114	PASADOR, DE ESPIGA PIN, DOWEL	2					
4	95022–06035	PERNO, DE BRIDA BOLT, FLANGE	1					
5	95022–06050	PERNO, DE BRIDA BOLT, FLANGE	6					
6	90340–14810	TORNILLO, DE DRENAJE PLUG,STRAIGHT SCREW	1					
7	93210–14899	ANILLO O O-RING	1					
8	90340–32812	TORNILLO, DE DRENAJE PLUG,STRAIGHT SCREW	1					
9	93210–328A4	ANILLO O O-RING	1					
10	5VL–E5191–00	PLACA PLATE	1					
11	98512–06010	TORNILLO SCREW, PAN HEAD	1					
12	5VL–E5418–01	CUBIERTA CAJA DE CADENA COVER, CHAIN CASE	1					
13	98902–06016	TORNILLO DE LIGAR SCREW, BIND	2					
14	5VL–E5421–00	TAPA DE CARTER DERECHA COVER, CRANKCASE 2	1					
15	5VL–E5461–10	JUNTA TAPA CARTER DERECHO 2 GASKET, CRANKCASE COVER 2	1					
16	99530–10114	PASADOR, DE ESPIGA PIN, DOWEL	2					
17	95022–06035	PERNO, DE BRIDA BOLT, FLANGE	7					
18	95022–06045	PERNO, DE BRIDA BOLT, FLANGE	2					
19	5VL–E5362–00	TAPON DEL NIVEL DE ACEITE PLUG, OIL LEVEL	1					
20	93210–19809	ANILLO O O-RING	1					
21	93101–10800	SELLO ACEITE OIL SEAL	1					

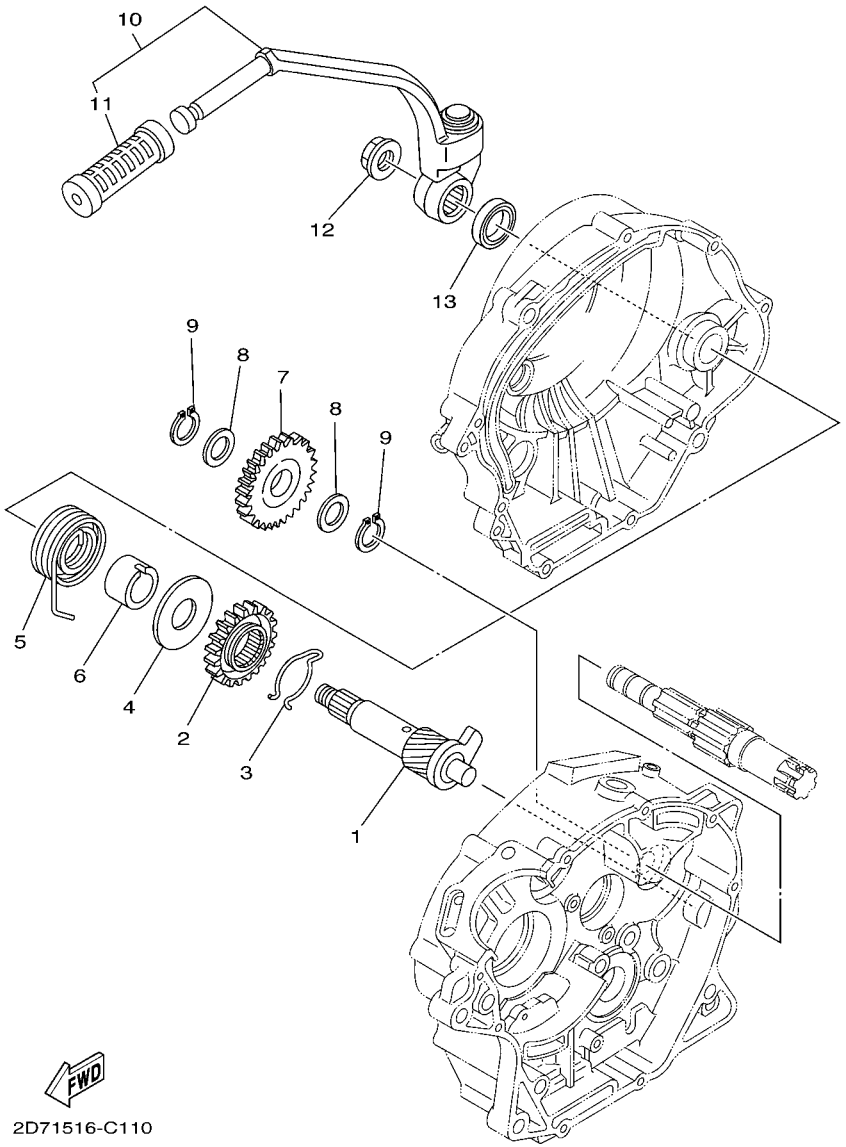

FIG. 11 ARRANQUE STARTER

REF. Nº	CODIGO Nº PART NO.	DESCRIPCION DESCRIPTION	1BV3					OBSERVACIONES REMARKS
1	5VL–E5660–01	EJE DEL PEDAL DE ARRAN.COMPLET KICK AXLE ASSY	1					
2	4FP–E5641–00	ENGRANAJE PEDAL ARRANQUE GEAR, KICK	1					
3	90468–26813	PRESILLA CLIP	1					
4	90201–208D5	ARANDELA PLANA WASHER, PLATE	1					
5	90508–26836	RESORTE DE TORSION SPRING, TORSION	1					
6	4FP–E5666–00	SEPARADOR SPACER	1					
7	5VL–E5651–00	PINON LIBRE, PEDAL ARRANQUE GEAR, KICK IDLE	1					
8	90201–152H7	ARANDELA PLANA WASHER, PLATE	2					
9	99009–15400	PRESILLA REDONDA CIRCLIP	2					
10	5VL–E5620–01	PEDAL DE ARRANQUE COMPLETO KICK CRANK ASSY	1					
11	47V–E5618–00	.GOMA PROTECTORA, PEDAL .COVER, KICK LEVER	1					
12	90179–12813	TUERCA NUT	1					
13	93109–20806	SELLO ACEITE OIL SEAL	1					

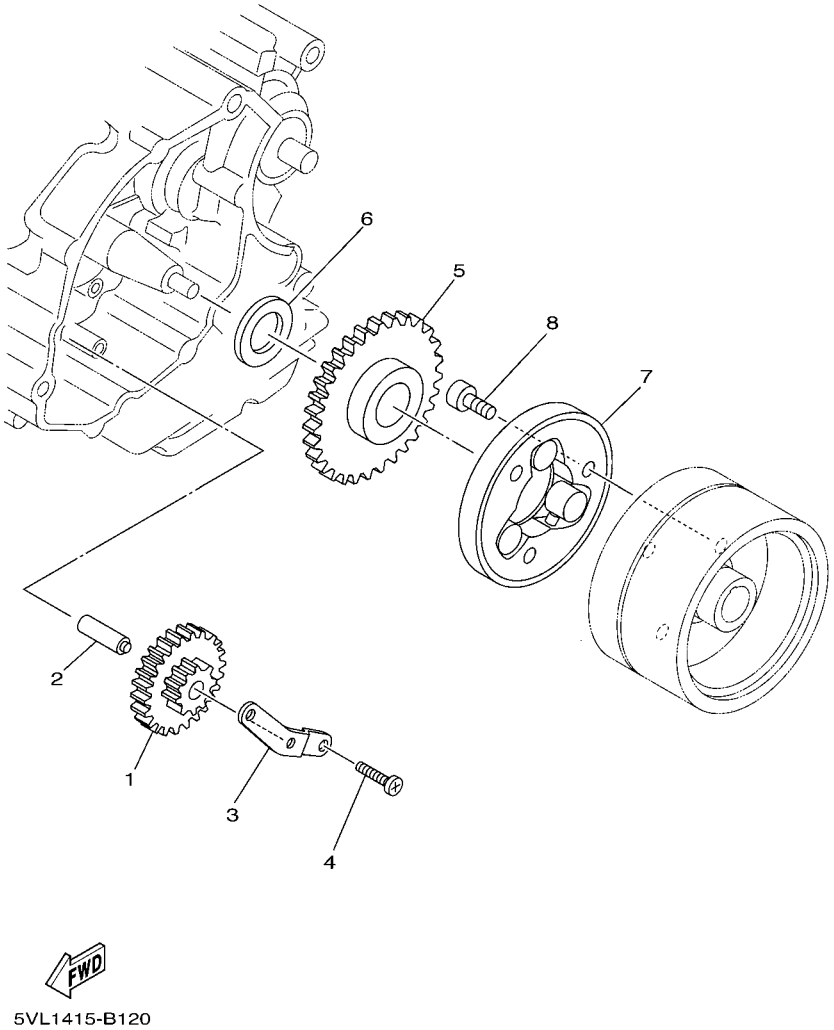

FIG. 12 EMBRAGUE DEL ARRANQUE STARTER CLUTCH

REF. Nº	CODIGO Nº PART NO.	DESCRIPCION DESCRIPTION	1BV3					OBSERVACIONES REMARKS
1	5VL–E5512–00	ENGRENAJE NEUTRO GEAR, IDLER 1	1					
2	5VL–E5521–00	EJE 1 SHAFT 1	1					
3	5VL–E5532–00	PLACA DE ENGRENAJE NEUTRO PLATE, IDLE GEAR	1					
4	98512–06012	TORNILLO SCREW, PAN HEAD	2					
5	5VL–E5517–00	ENGRENAJE POSICION 2DA GEAR, IDLER 2	1					
6	90201–258D7	ARANDELA PLANA WASHER, PLATE	1					
7	4FP–E5580–00	ENSAMBLE EXT.EMBRAGUE ARRANQUE STARTER CLUTCH OUTER ASSY	1					
8	91312–08016	TORNILLO BOLT	3					

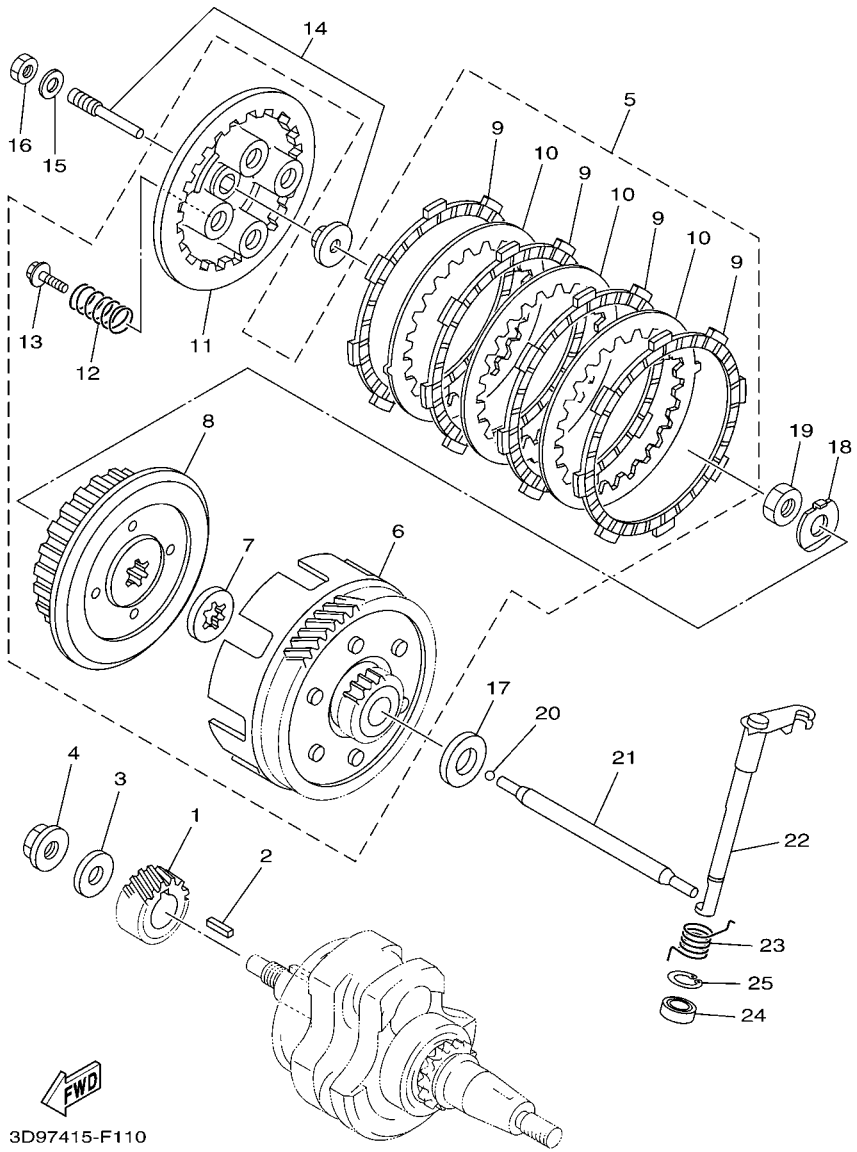

FIG. 13 EMBRAGUE CLUTCH

REF. Nº	CODIGO Nº PART NO.	DESCRIPCION DESCRIPTION	1BV3					OBSERVACIONES REMARKS
1	5VL–E6111–00	ENGRANAJE TRACC.PRIMARIA GEAR, PRIMARY DRIVE	1					
2	90282–05001	CHAVETA, RECTA (5MMX16MM) KEY, STRAIGHT (5MMX16MM)	1					
3	90201–122H1	ARANDELA PLANA WASHER, PLATE	1					
4	90179–12813	TUERCA NUT	1					
5	5VL–E6300–10	EMBRAGUE COMPLETO CLUTCH ASSY	1					
6	5VL–E6150–00	.CAMPANA DE EMBRAGUE .PRIMARY DRIVEN GEAR COMP.	1					
7	5VL–E6154–00	.ARANDELA, DE EMPUJE 1 .PLATE, THRUST 1	1					
8	5VL–E6371–10	.CUBO, DE EMBRAGUE .BOSS, CLUTCH	1					
9	5VL–E6321–10	.PLACA DE FRICCION .PLATE, FRICTION	4					
10	5VL–E6324–00	.PLACA DE EMBRAGUE .PLATE, CLUTCH 1	3					
11	5VL–E6351–00	.PLATO DE PRESION .PLATE, PRESSURE 1	1					
12	5VL–E6333–10	.RESORTE DE EMBRAGUE 1 .SPRING, CLUTCH 1	4					
13	5VL–E6337–00	.TORNILLO DE RESORTE .SCREW, SPRING	4					
14	5VL–Y1635–10	CONJ. PALANCA DE EMPUJE PUSH LEVER COMP.	1					
15	92902–06200	ARANDELA WASHER	1					
16	95302–06600	TUERCA NUT	1					
17	5VL–E6164–10	PLACA DE EMPUJE 2 PLATE, THRUST 2	1					
18	90215–12211	ARANDELA DE CIERRE WASHER, LOCK	1					
19	90170–12060	TUERCA NUT	1					
20	93503–16824	ESFERA BALL	1					
21	5VL–E6357–01	VARILLA DE EMPUJE 2 ROD, PUSH 2	1					
22	5VL–E6381–02	CONJ. PALANCA DE EMPUJE PUSH LEVER COMP.	1					
23	90508–16800	RESORTE DE TORSION SPRING, TORSION	1					
24	93102–12802	SELLO ACEITE OIL SEAL	1					
25	99009–20500	PRESILLA REDONDA CIRCLIP	1					

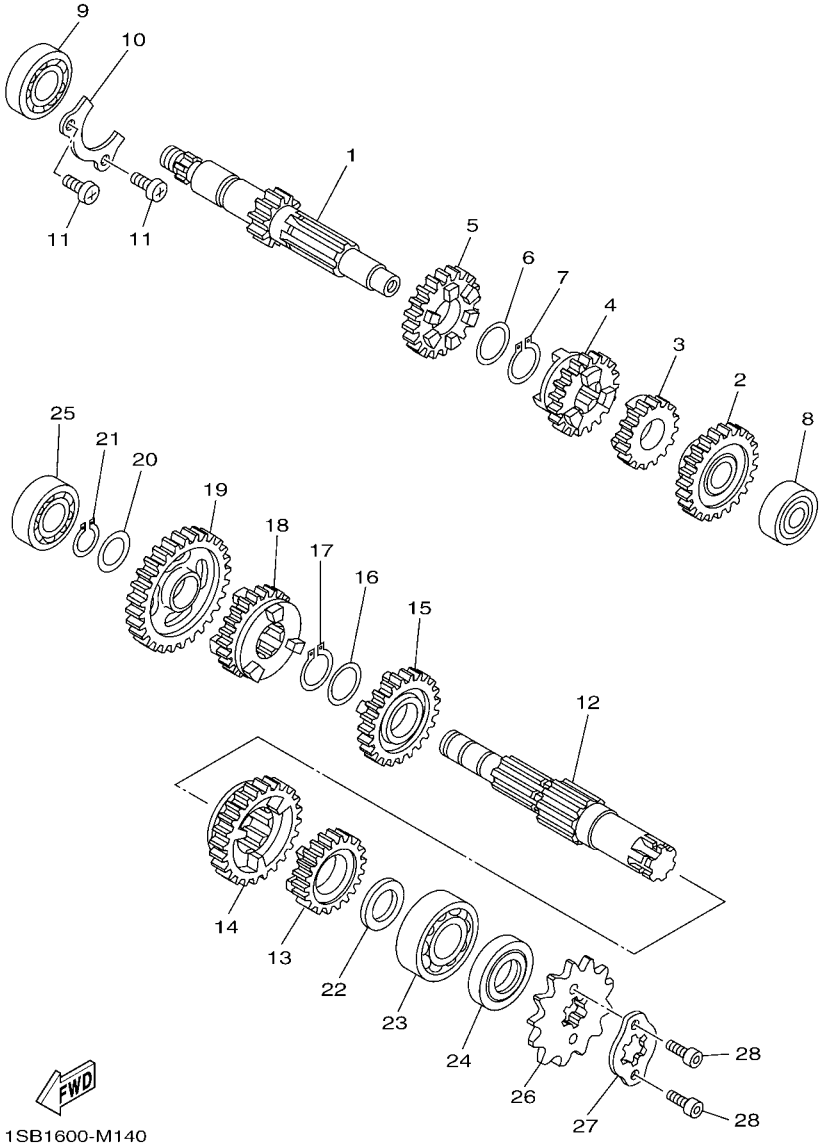

FIG. 14 TRANSMISION — TRANSMISSION

REF. Nº	CODIGO Nº PART NO.	DESCRIPCION DESCRIPTION	1BV3					OBSERVACIONES REMARKS
1	5VL–E7411–00	EJE PRIMARIO (14T) AXLE, MAIN (14T)	1					
2	5VL–E7151–00	ENGRANAJE PINON DE 5TA (24T) GEAR, 5TH PINION (24T)	1					
3	5VL–E7121–00	ENGRANAJE DE PINON DE 2DA(18T) GEAR, 2ND PINION (18T)	1					
4	5VL–E7131–00	ENGRANAJE PINON DE 3RA (19T) GEAR, 3RD PINION (19T)	1					
5	5VL–E7141–00	ENGRANAJE PINON DE 4TA (22T) GEAR, 4TH PINION (22T)	1					
6	90201–20266	ARANDELA, PLACA (T=1.0) WASHER, PLATE (T=1.0)	1					
7	93410–20809	SEGURO CIRCLIP	1					
8	93306–201Y8	COJINETE BEARING	1					
9	93306–203YT	COJINETE BEARING	1					
10	5VL–E7471–00	PLACA, DE CUBIERTA PLATE, COVER	1					
11	98512–06012	TORNILLO SCREW, PAN HEAD	2					
12	5VL–E7402–00	EJE DE TRACCION COMPLETO DRIVE AXLE ASSY	1					
13	5VL–E7251–00	ENGRANAJE RUEDA DE 5TA (21T) GEAR, 5TH WHEEL (21T)	1					
14	5VL–E7221–00	ENGRANAJE RUEDA DE 2DA (32T) GEAR, 2ND WHEEL (32T)	1					
15	5VL–E7231–00	ENGRANAJE RUEDA DE 3RA (25T) GEAR, 3RD WHEEL (25T)	1					
16	90201–20266	ARANDELA, PLACA (T=1.0) WASHER, PLATE (T=1.0)	1					
17	93410–20809	SEGURO CIRCLIP	1					
18	5VL–E7241–00	ENGRANAJE DE RUEDA 4TA (23T) GEAR, 4TH WHEEL (23T)	1					
19	5VL–E7211–00	ENGRANAJE RUEDA DE 1 RA (37T) GEAR, 1ST WHEEL (37T)	1					
20	90201–15700	ARANDELA PLANA WASHER, PLATE	1					
21	99009–15400	PRESILLA REDONDA CIRCLIP	1					
22	90201–20272	ARANDELA PLANA WASHER, PLATE	1					
23	93306–204YD	COJINETE BEARING	1					
24	93102–20854	SELLO ACEITE OIL SEAL	1					
25	93306–202XP	COJINETE BEARING	1					
26	93822–14813	CORONA (14T) SPROCKET, DRIVE (14T)	1					
27	3D9–E7456–01	SOPORTE DE CORONA HOLDER, SPROCKET	1					

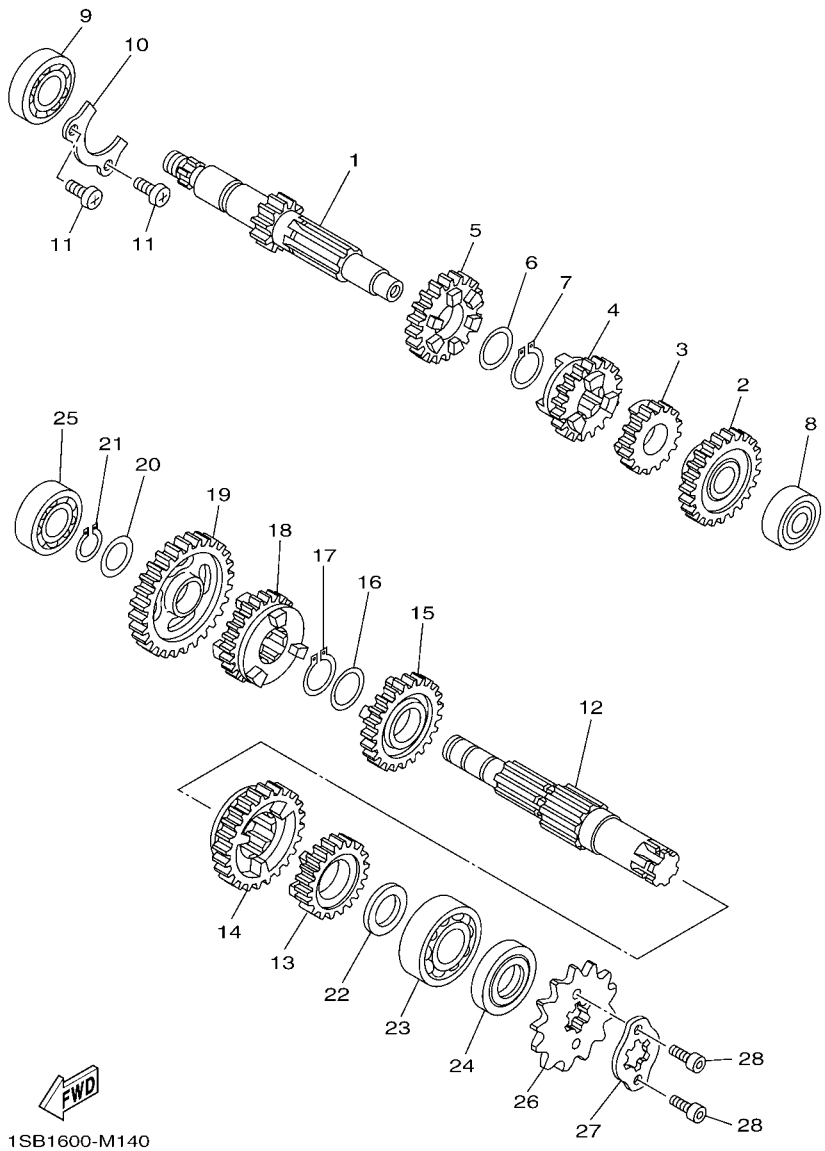

FIG. 14 TRANSMISION — TRANSMISSION

REF. Nº	CODIGO Nº PART NO.	DESCRIPCION DESCRIPTION	1BV3					OBSERVACIONES REMARKS
28	91312–05010	TORNILLO BOLT	2					

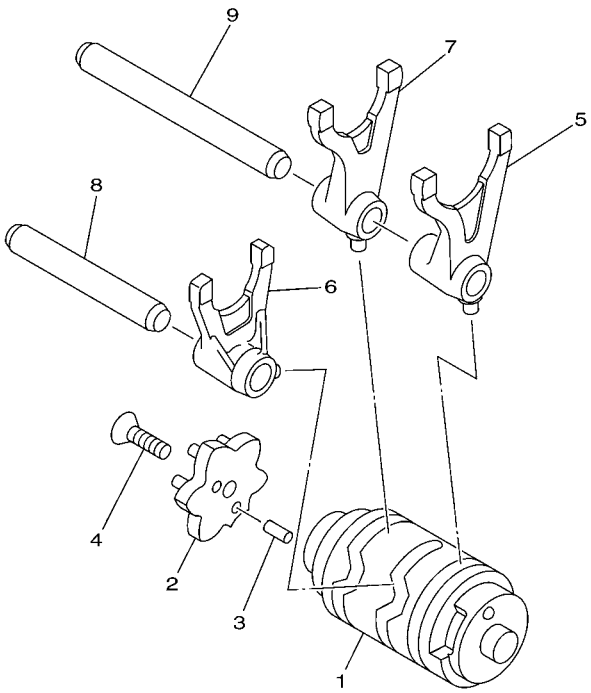

5HP1100-0140

FIG. 15 LEVA DE CAMBIO & HORQUILLA SHIFT CAM & FORK

REF. Nº	CODIGO Nº PART NO.	DESCRIPCION DESCRIPTION	1BV3					OBSERVACIONES REMARKS
1	5VL–Y1854–01	LEVADEL CAMBIO COMPLETA SHIFT CAM ASSY	1					
2	2D0–E8185–00	SEGMENTO DE RETENCION SEGMENT	1					
3	93604–10837	PASADOR DE CLAVIJA PIN, DOWEL	2					
4	90151–06818	TORNILLO EMBUTIDO SCREW, COUNTERSUNK	1					
5	5VL–E8511–00	HORQUILLA DEL CAMBIO 1 FORK, SHIFT 1	1					
6	5VL–E8512–00	HORQUILLA DEL CAMBIO 2 FORK, SHIFT 2	1					
7	5VL–E8513–00	HORQUILLA DEL CAMBIO 3 FORK, SHIFT 3	1					
8	5VL–E8531–00	BARRA GUIA HORQ. CAMBIO 1 BAR, SHIFT FORK GUIDE 1	1					
9	5VL–E8535–00	BARRA GUIA HORQ .CAMBIO 2 BAR, SHIFT FORK GUIDE 2	1					

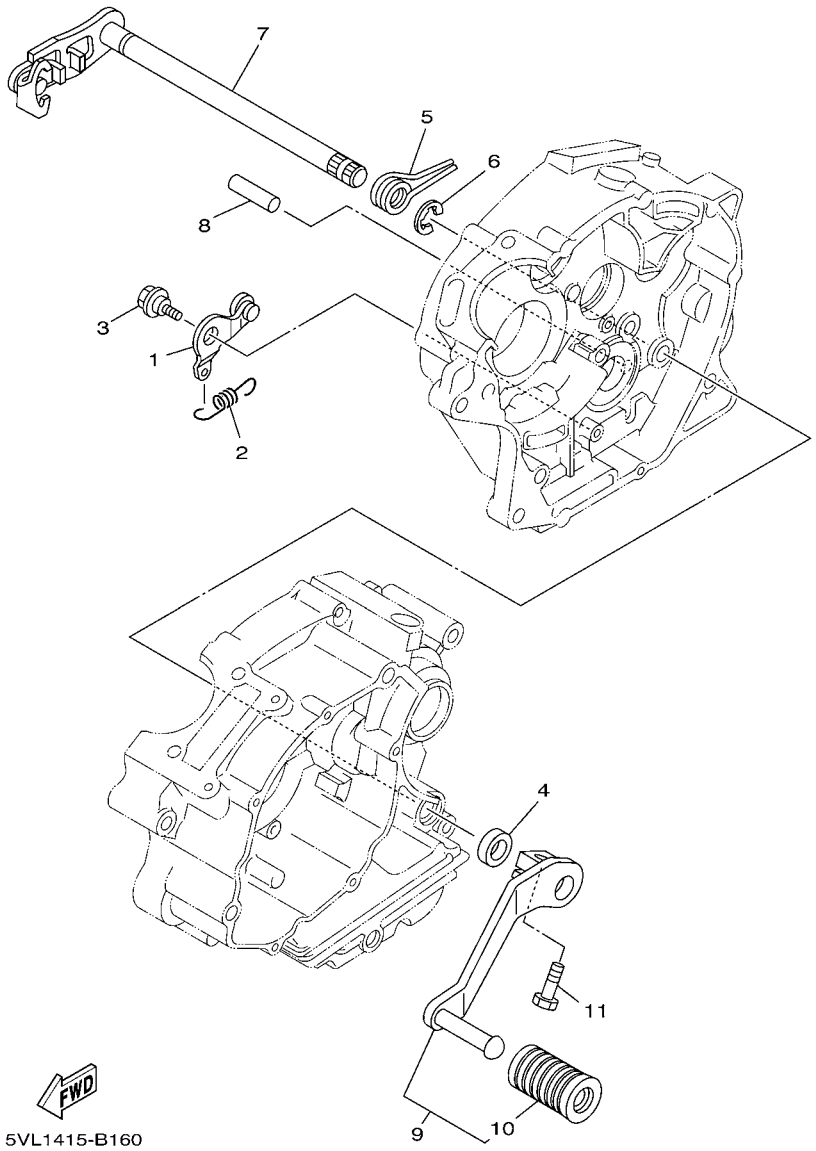

FIG. 16 EJE DE CAMBIO & PEDAL SHIFT SHAFT

REF. Nº	CODIGO Nº PART NO.	DESCRIPCION DESCRIPTION	1BV3					OBSERVACIONES REMARKS
1	5VL–E8140–00	PALANCA DE TOPE COMPLETA STOPPER LEVER ASSY	1					
2	5VL–E8337–00	RESORTE SPRING	1					
3	4FP–E8177–00	TORNILLO DE TOPE BOLT, STOPPER	1					
4	93101–12812	SELLO ACEITE OIL SEAL	1					
5	90508–32801	RESORTE DE TORSION SPRING, TORSION	1					
6	99002–10600	PRESILLA REDONDA CLIP	1					
7	5VL–E8101–02	EJE SELECTOR COMPLETO SHIFT SHAFT ASSY	1					
8	93608–30839	PASADOR DE CLAVIJA PIN, DOWEL	1					
9	2CD–E8110–00	PEDAL DE CAMBIO COMPLETO SHIFT PEDAL ASSY	1					
10	5VA–E8113–00	.FUNDA DEL PEDAL DEL CAMBIO .COVER, SHIFT PEDAL	1					
11	97022–06020	PERNO BOLT, HEXAGON	1					

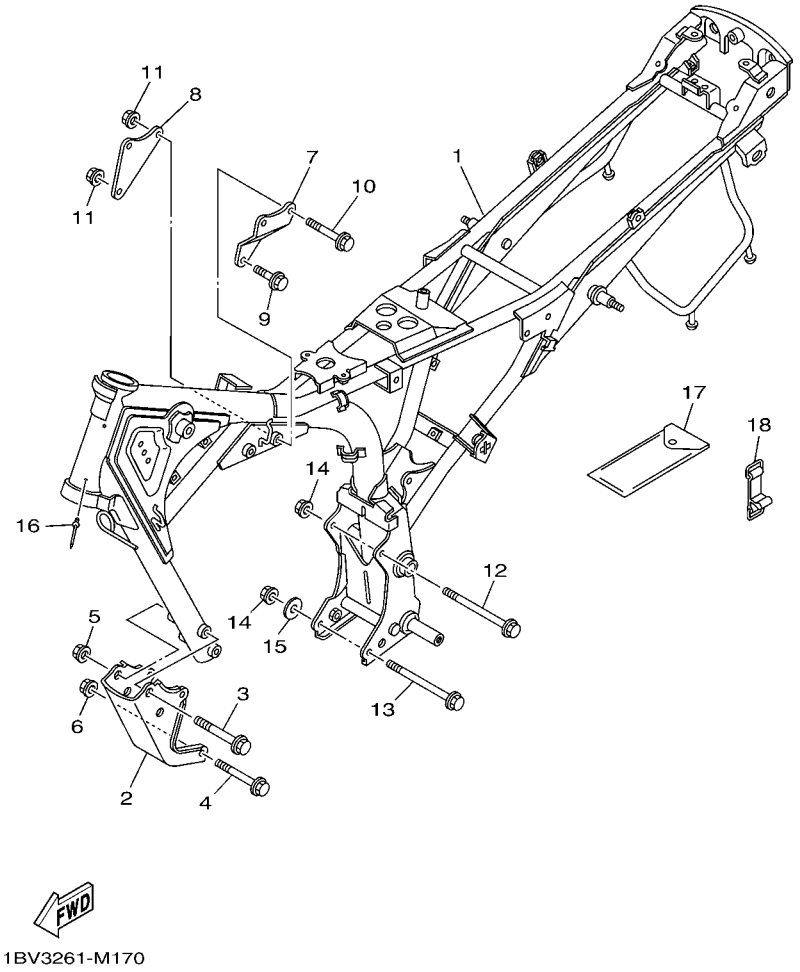

FIG. 17 CUADRO FRAME

REF. Nº	CODIGO Nº PART NO.	DESCRIPCION DESCRIPTION	1BV3					OBSERVACIONES REMARKS
1	1BV–F1110–10	ARMAZON COMPLETO FRAME COMP.	1					
2	2CD–F1316–00	SOPORTE DE MOTOR 3 STAY, ENGINE 3	1					
3	95812–10080	TORNILLO DE REBORDE BOLT, FLANGE	2					
4	90105–08874	TORNILLO BOLT, FLANGE	2					
5	90179–10807	TUERCA NUT	2					
6	90179–08830	TUERCA NUT	2					
7	2CD–F1317–00	SOPORTE DE MOTOR 3 STAY, ENGINE 3	1					
8	2CD–F1318–00	SOPORTE DE MOTOR 5 STAY, ENGINE 5	1					
9	90105–088E4	TORNILLO BOLT, FLANGE	1					
10	90105–088E5	TORNILLO BOLT, FLANGE	2					
11	90179–08830	TUERCA NUT	3					
12	90105–08873	TORNILLO BOLT, FLANGE	1					
13	90105–088E6	TORNILLO BOLT, FLANGE	1					
14	90179–08830	TUERCA NUT	2					
15	90201–08840	ARANDELA PLANA WASHER, PLATE	1					
16	90267–32845	REMACHE CIEGO RIVET, BLIND	2					
17	5VL–F8100–01	JUEGO DE HERRAMIENTAS TOOL KIT	1					
18	5VL–F811G–01	CINTA BAND	1					

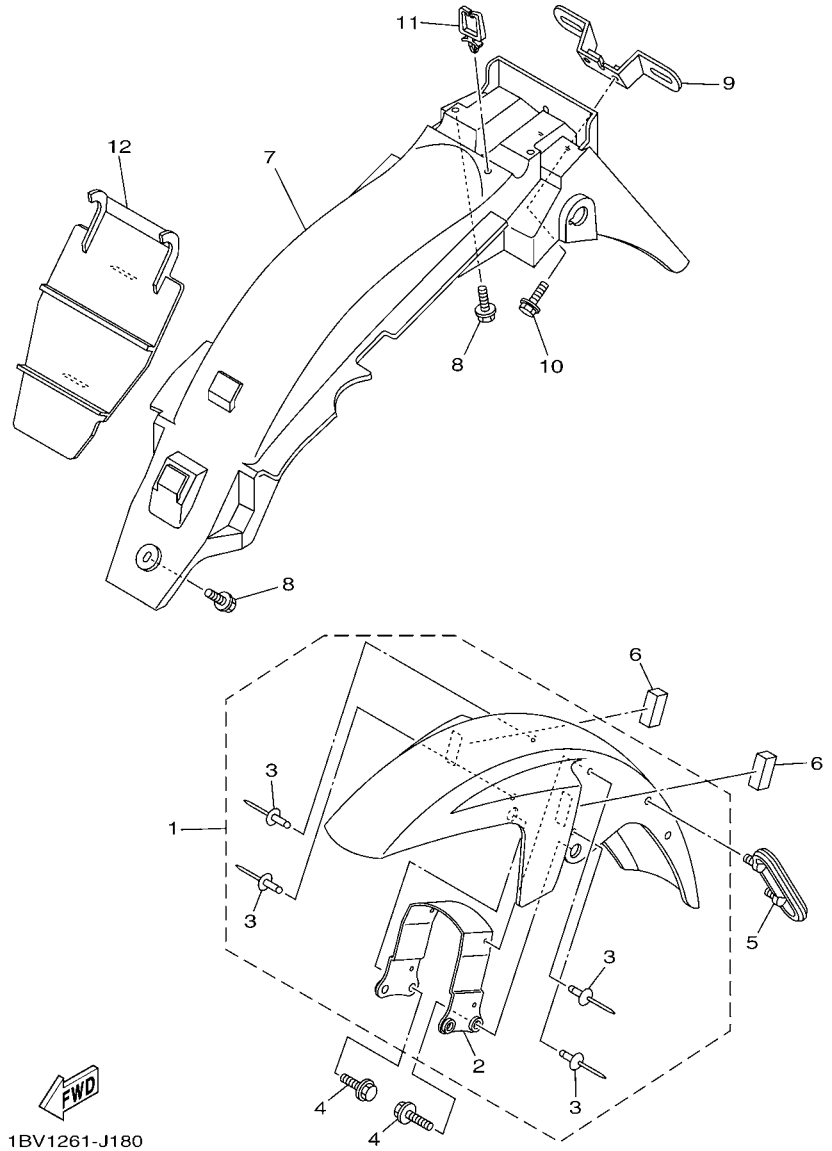

FIG. 18 GUARDABARRO FENDER

REF. Nº	CODIGO Nº PART NO.	DESCRIPCION DESCRIPTION	1BV3					OBSERVACIONES REMARKS
1	1BV–F1510–00–P0	GUARDABARRO DELANTERO COMPLETO FRONT FENDER COMP.	1					UR PARA VRC7 UR FOR VRC7
	1BV–F1510–00–P1	GUARDABARRO DELANTERO COMPLETO FRONT FENDER COMP.	1					UR PARA SMX UR FOR SMX
	1BV–F1510–00–P2	GUARDABARRO DELANTERO COMPLETO FRONT FENDER COMP.	1					UR PARA DPBMC UR FOR DPBMC
	1BV–F1510–00–GE	GUARDABARRO DELANTERO COMPLETO FRONT FENDER COMP.	1					UR PARA SW UR FOR SW
2	5VL–F1513–01	.SOPORTE DE GUARDABARRO .STAY, FENDER 1	1					
3	90267–48854	.REMACHE CIEGO .RIVET, BLIND	4					
4	95822–06016	TORNILLO DE REBORDE BOLT, FLANGE	4					
5	5VL–F1518–01	SOPORTE DE CABLE HOLDER, CABLE	1					
6	5VL–F1541–00	AMORTIGUADOR 1 DAMPER 1	2					
7	5VL–F1611–02	GUARDABARRO TRASERO FENDER, REAR	1					
8	90119–06869	TORNILLO CON ARANDELA BOLT, WITH WASHER	3					
9	4GU–F1685–00	SOPORTE DE LICENCIA BRACKET, LICENSE	1					
10	90119–06811	TORNILLO CON ARANDELA BOLT, WITH WASHER	2					
11	90464–12803	BRIDA CLAMP	2					
12	5VL–F1621–00	CHARNELA FLAP	1					

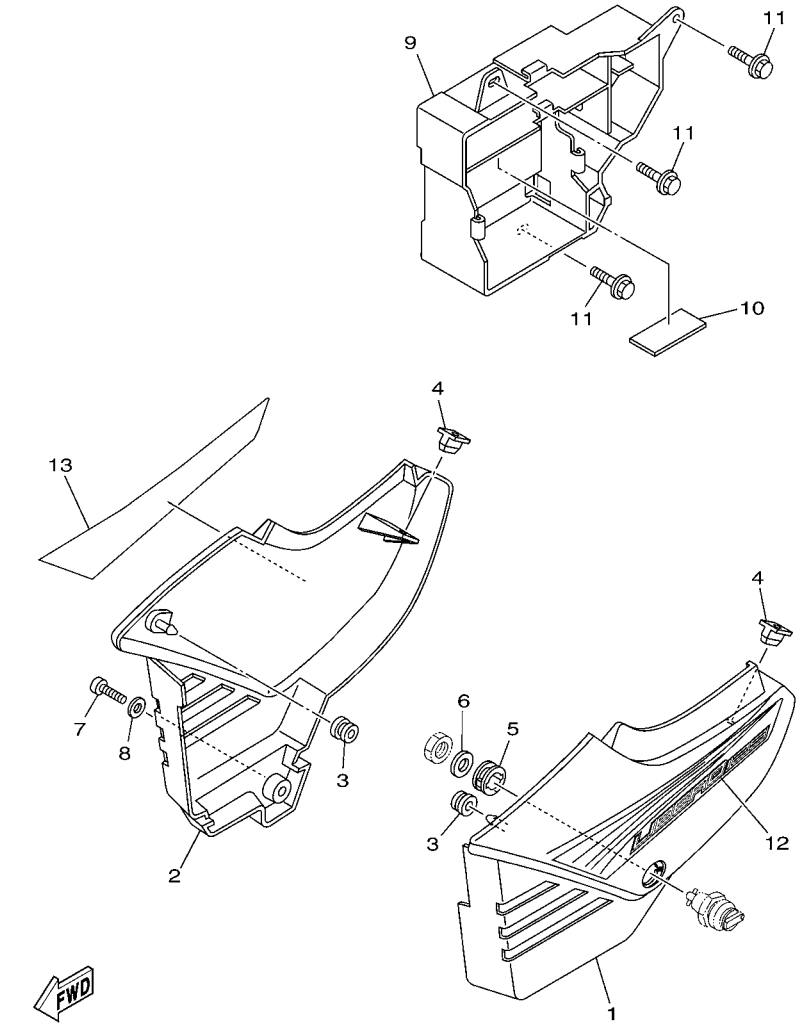

1BV3261-M190

FIG. 19 CUBIERTA LATERAL SIDE COVER

REF. Nº	CODIGO Nº PART NO.	DESCRIPCION DESCRIPTION	1BV3					OBSERVACIONES REMARKS
1	1BV–F1711–00–0X	CUBIERTA LATERAL 1 COVER, SIDE 1	1					UR PARA VRC7 UR FOR VRC7
	1BV–F1711–00–1X	CUBIERTA LATERAL 1 COVER, SIDE 1	1					UR PARA SMX UR FOR SMX
	1BV–F1711–00–2X	CUBIERTA LATERAL 1 COVER, SIDE 1	1					UR PARA DPBMC UR FOR DPBMC
	1BV–F1711–00–4X	CUBIERTA LATERAL 1 COVER, SIDE 1	1					UR PARA SW UR FOR SW
2	1BV–F1721–00–0X	CUBIERTA LATERAL 2 COVER, SIDE 2	1					UR PARA VRC7 UR FOR VRC7
	1BV–F1721–00–1X	CUBIERTA LATERAL 2 COVER, SIDE 2	1					UR PARA SMX UR FOR SMX
	1BV–F1721–00–2X	CUBIERTA LATERAL 2 COVER, SIDE 2	1					UR PARA DPBMC UR FOR DPBMC
	1BV–F1721–00–4X	CUBIERTA LATERAL 2 COVER, SIDE 2	1					UR PARA SW UR FOR SW
3	90480–13837	TAPON GROMMET	2					
4	5VL–F1778–00	AMORTIGUADOR DE MONTAJE DAMPER, LOCATING 1	2					
5	90480–24186	TAPON GROMMET	1					
6	90201–228F6	ARANDELA PLANA WASHER, PLATE	1					
7	98902–06020	TORNILLO DE LIGAR SCREW, BIND	1					
8	90201–06850	ARANDELA PLANA WASHER, PLATE	1					
9	5VL–F177G–00	CAJA DE BATERIA BOX, BATTERY	1					
10	5VL–F1746–00	AMORTIGUADOR DAMPER	1					
11	90119–06811	TORNILLO CON ARANDELA BOLT, WITH WASHER	3					
12	1BV–F174G–50	GRAFICO 3 GRAPHIC 3	1					UR PARA VRC7 UR FOR VRC7
	1BV–F174G–60	GRAFICO 3 GRAPHIC 3	1					UR PARA SMX UR FOR SMX
	1BV–F174G–70	GRAFICO 3 GRAPHIC 3	1					UR PARA DPBMC UR FOR DPBMC
	1BV–F174G–80	GRAFICO 3 GRAPHIC 3	1					UR PARA SW UR FOR SW
13	1BV–F174H–50	GRAFICO 4 GRAPHIC 4	1					UR PARA VRC7 UR FOR VRC7
	1BV–F174H–60	GRAFICO 4 GRAPHIC 4	1					UR PARA SMX UR FOR SMX
	1BV–F174H–70	GRAFICO 4 GRAPHIC 4	1					UR PARA DPBMC UR FOR DPBMC
	1BV–F174H–80	GRAFICO 4 GRAPHIC 4	1					UR PARA SW UR FOR SW

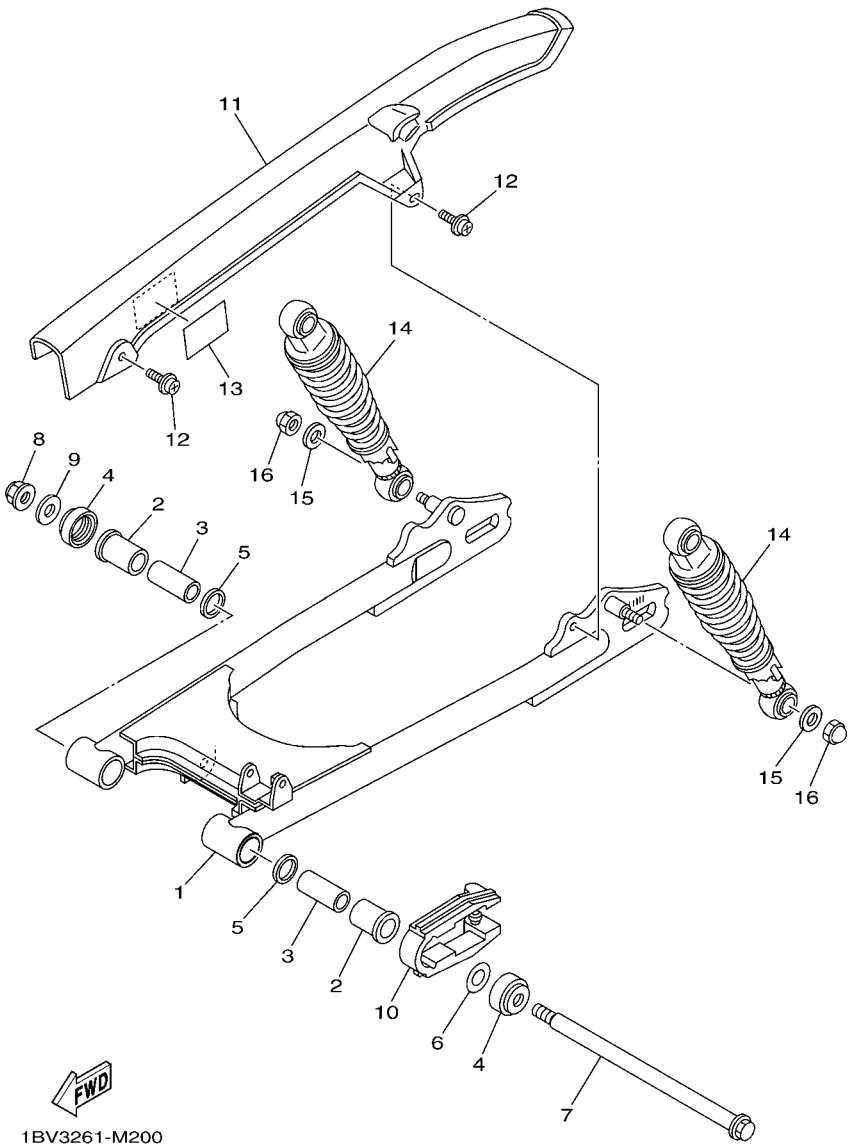

FIG. 20 BRAZO TRASERO & SUSPENSION REAR ARM & SUSPENSION

REF. Nº	CODIGO Nº PART NO.	DESCRIPCION DESCRIPTION	1BV3					OBSERVACIONES REMARKS
1	2CD–F2110–00	BRAZO TRASERO COMPLETO REAR ARM COMP.	1					
2	90386–18801	BUJE BUSH	2					
3	5VL–F2123–00	BUJE 1 BUSH 1	2					
4	5VL–F2128–01	TAPA DE EMPIJE 1 COVER, THRUST 1	2					
5	93109–18802	SELLO ACEITE OIL SEAL	2					
6	5VL–F2127–00	CUNA SHIM	1					UN UN
7	5VL–F2141–01	EJE DEL BARCULANTE SHAFT, PIVOT	1					
8	95602–12200	TUERCA DE AUTO-CIERRE NUT, SELF-LOCKING	1					
9	90201–12819	ARANDELA PLANA WASHER, PLATE	1					
10	5VL–F2151–10	SELLO DE GUARDA SEAL, GUARD	1					
11	5VL–F2311–00	CABRECADENA CASE, CHAIN	1					
12	90159–06830	TORNILLO CON VALONA SCREW, WITH WASHER	2					
13	1BV–F1668–00	ETIQUETA DE FRANJA LABEL, TIRE	1					
14	5VL–F2210–01	AMORTIGUADOR TRASERO COMPLETO SHOCK ABSORBER ASSY, REAR	2					
15	90201–108C7	ARANDELA PLANA WASHER, PLATE	4					
16	90176–10810	TUERCA CORONA NUT, CROWN	4					

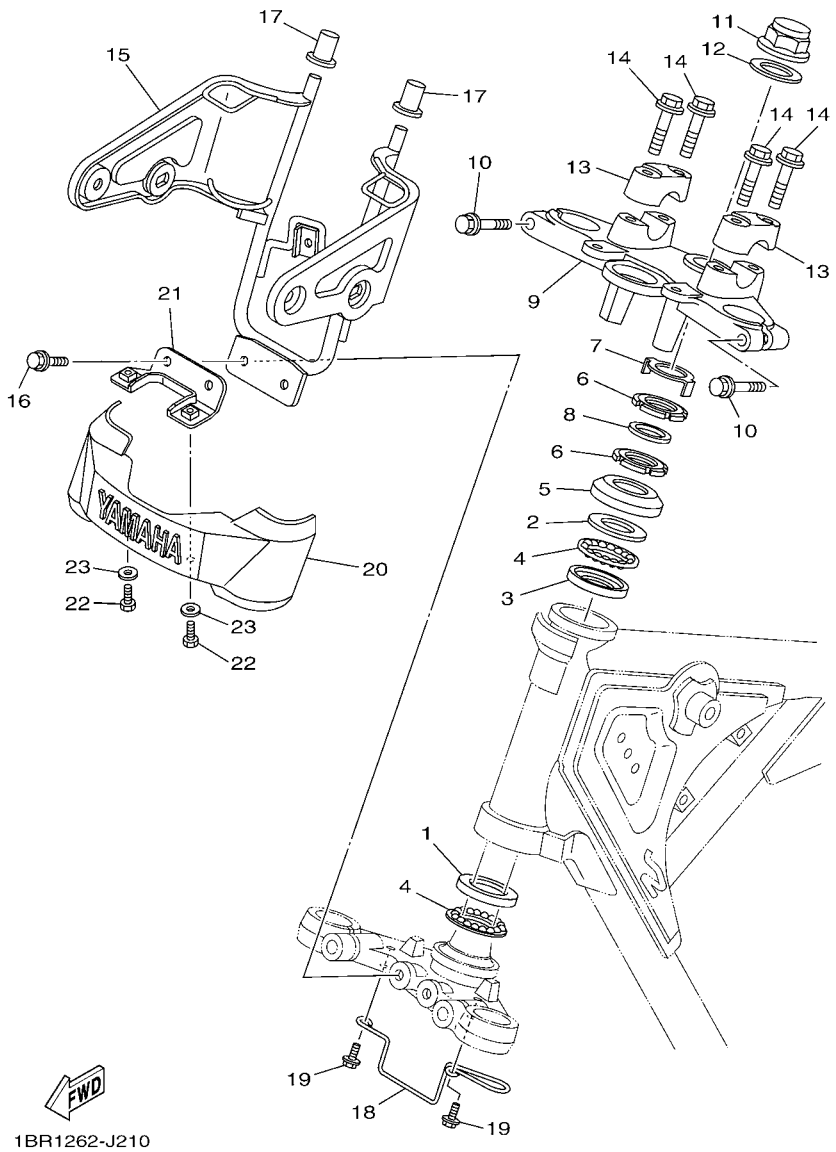

FIG. 21 DIRECCION STEERING

REF. Nº	CODIGO Nº PART NO.	DESCRIPCION DESCRIPTION	1BV3					OBSERVACIONES REMARKS
1	1KL–F3412–00	PISTA DE BOLAS 2 RACE, BALL 2	1					
2	4FP–F3411–00	PISTA DE BOLAS 1 RACE, BALL 1	1					
3	4FP–F3412–00	PISTA DE BOLAS 2 RACE, BALL 2	1					
4	5VL–F341E–00	RETEN DE COJINETE RETAINER, BALL BEARING	2					
5	4GU–F3416–00	CUBIERTA DE BASE DE BOLA 2 COVER, BALL RACE 2	1					
6	90179–25806	TUERCA NUT	2					
7	5VL–F3418–01	ARANDELA ESPECIAL WASHER, SPECIAL	1					
8	90202–26142	ARANDELA DE PLANA WASHER, PLATE	1					
9	5VL–F3435–00–33	PLATINA SUPERIOR CROWN, HANDLE	1					YB YB
10	95022–08040	PERNO, DE BRIDA BOLT, FLANGE	2					
11	90176–22801	TUERCA CORONA NUT, CROWN	1					
12	5VL–F3165–01	ARANDELA DE FIELTRO WASHER, FELT	1					
13	5VL–F3441–00	SOPORTE DE MANUBRIO HOLDER, HANDLE UPPER	2					
14	95022–08035	PERNO, DE BRIDA BOLT, FLANGE	4					
15	2B9–F3174–00	SOPORTE DEL FARO DELANTERO STAY, HEADLIGHT	1					
16	95822–06016	TORNILLO DE REBORDE BOLT, FLANGE	2					
17	4FP–F317J–00	AMORTIGUADOR 1 DAMPER 1	2					
18	5VL–F3389–01	GUIA DE CABLE GUIDE, CABLE	1					
19	95822–06012	TORNILLO DE REBORDE BOLT, FLANGE	2					
20	4FP–F3395–10	EMBLEMA EMBLEM	1					
21	5VL–F334G–11	SOPORTE 1 BRACKET 1	1					
22	97002–05012	PERNO BOLT	2					
23	90201–05802	ARANDELA PLANA WASHER, PLATE	2					

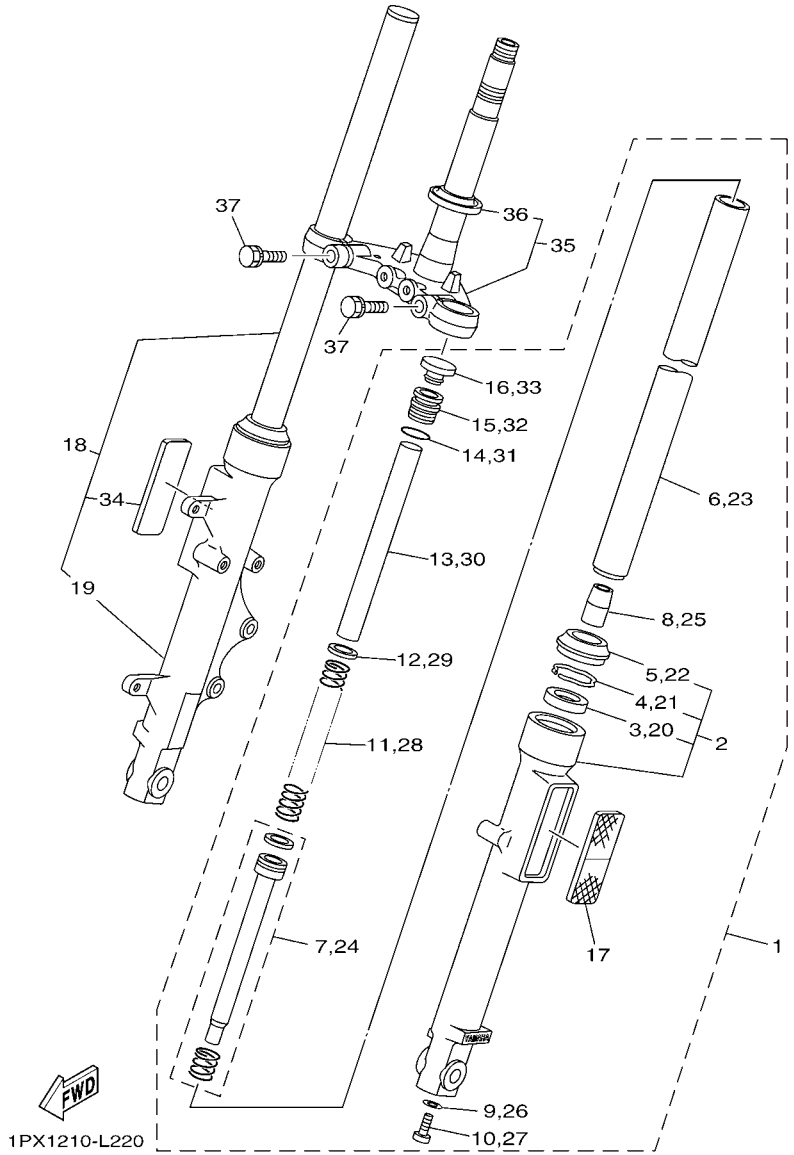

FIG. 22 HORQUILLA DELANTERA FRONT FORK

REF. Nº	CODIGO Nº PART NO.	DESCRIPCION DESCRIPTION	1BV3					OBSERVACIONES REMARKS
1	5VL–F3102–B1	HORQUILLA DELANTERA COMPL.(MI) FRONT FORK ASSY (L.H)	1					
2	5VL–F3106–30	.TUBO EXTERIOR COMPLETO .OUTER TUBE COMP.	1					
3	4GU–F3145–00	..RETEN DE ACEITE ..OIL SEAL	1					
4	5AP–F3153–00	..ANILLO DE ENGANCHE ..RING, SNAP	1					
5	4GU–F3144–00	..GUARDAPOLVO ..SEAL, DUST	1					
6	5HH–F3110–22	.TUBO INTERIOR COMPLETO 1 .INNER TUBE COMP.1	1					
7	5VL–F3170–01	.CILINDRO COMPL DE HORQ DELANT .CYLINDER COMP., FRONT FORK	1					
8	4GU–F3173–01	.VASTAGO AHUSADO .SPINDLE, TAPER	1					
9	4TU–F3479–00	.EMPAQUE .GASKET	1					
10	5LK–F3356–01	.PERNO 2 .BOLT 2	1					
11	5VL–F3141–40	.RESORTE HORQUILLA DELANT. .SPRING, FRONT FORK	1					
12	5AP–F3427–00	.ARANDELA .WASHER	1					
13	5HH–F3118–10	.SEPARADOR .SPACER	1					
14	5AP–F3147–00	.ARO .O-RING	1					
15	5VL–F3111–20	.PERNO DE TAPA .BOLT, CAP	1					
16	5VL–F3154–00	.TAPON TUBO INTERIOR .CAP	1					
17	5VL–H5110–40	.REFLECTOR COMPLETO .REFLECTOR ASSY	1					
18	5VL–F3103–B1	HORQUILLA DELANTERA COMPL.(MD) FRONT FORK ASSY (R.H)	1					
19	5VL–F3107–40	.TUBO EXTERIOR COMPLETO (MD) .OUTER TUBE COMP. (R.H)	1					
20	4GU–F3145–00	..RETEN DE ACEITE ..OIL SEAL	1					
21	5AP–F3153–00	..ANILLO DE ENGANCHE ..RING, SNAP	1					
22	4GU–F3144–00	..GUARDAPOLVO ..SEAL, DUST	1					
23	5HH–F3110–22	.TUBO INTERIOR COMPLETO 1 .INNER TUBE COMP.1	1					
24	5VL–F3170–01	.CILINDRO COMPL DE HORQ DELANT .CYLINDER COMP., FRONT FORK	1					
25	4GU–F3173–01	.VASTAGO AHUSADO .SPINDLE, TAPER	1					
26	4TU–F3479–00	.EMPAQUE .GASKET	1					
27	5LK–F3356–01	.PERNO 2 .BOLT 2	1					

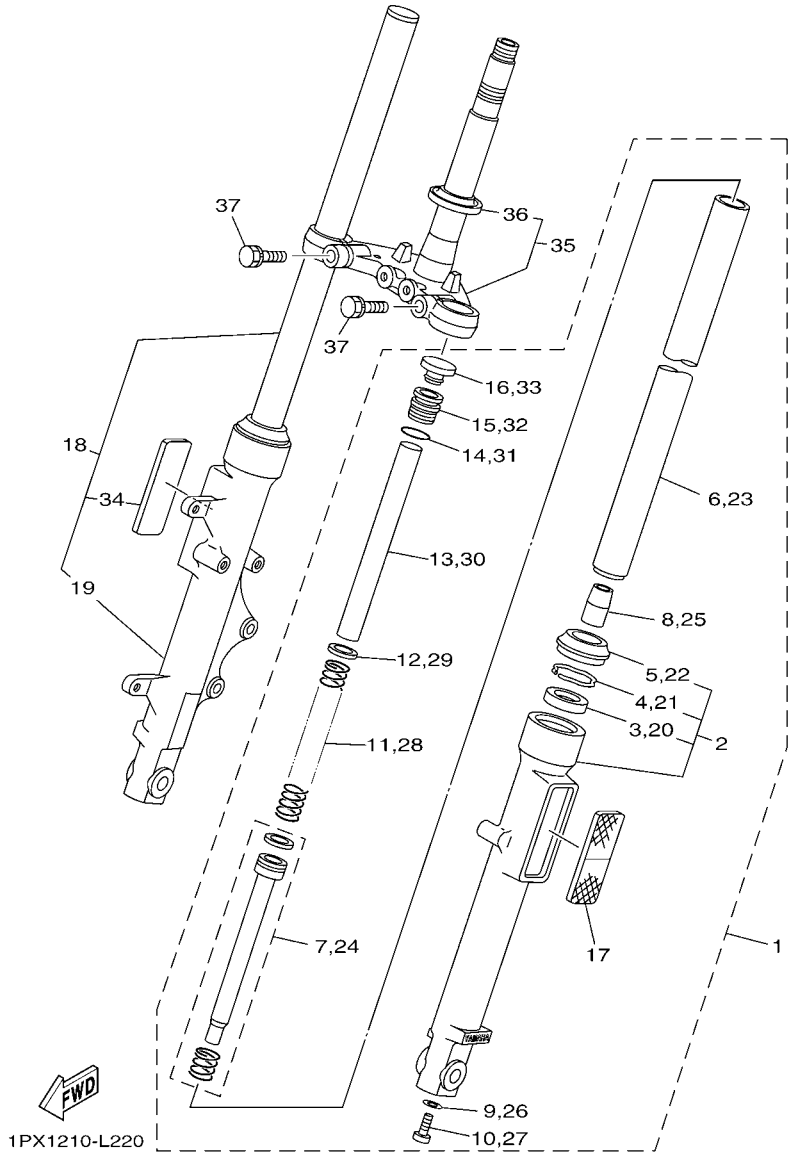

FIG. 22 HORQUILLA DELANTERA FRONT FORK

REF. Nº	CODIGO Nº PART NO.	DESCRIPCION DESCRIPTION	1BV3					OBSERVACIONES REMARKS
28	5VL–F3141–40	.RESORTE HORQUILLA DELANT. .SPRING, FRONT FORK	1					
29	5AP–F3427–00	.ARANDELA .WASHER	1					
30	5HH–F3118–10	.SEPARADOR .SPACER	1					
31	5AP–F3147–00	.ARO .O-RING	1					
32	5VL–F3111–20	.PERNO DE TAPA .BOLT, CAP	1					
33	5VL–F3154–00	.TAPON TUBO INTERIOR .CAP	1					
34	5VL–H5110–40	.REFLECTOR COMPLETO .REFLECTOR ASSY	1					
35	5VL–F331X–01	MENSULA INFERIOR BRACKET, UNDER	1					
36	4FP–F3411–10	.PISTA DE BOLAS 1 .RACE, BALL 1	1					
37	5VL–F3346–01	PERNO 1 BOLT 1	2					

FIG. 23 DEPOSITO DE COMBUSTIBLE FUEL TANK

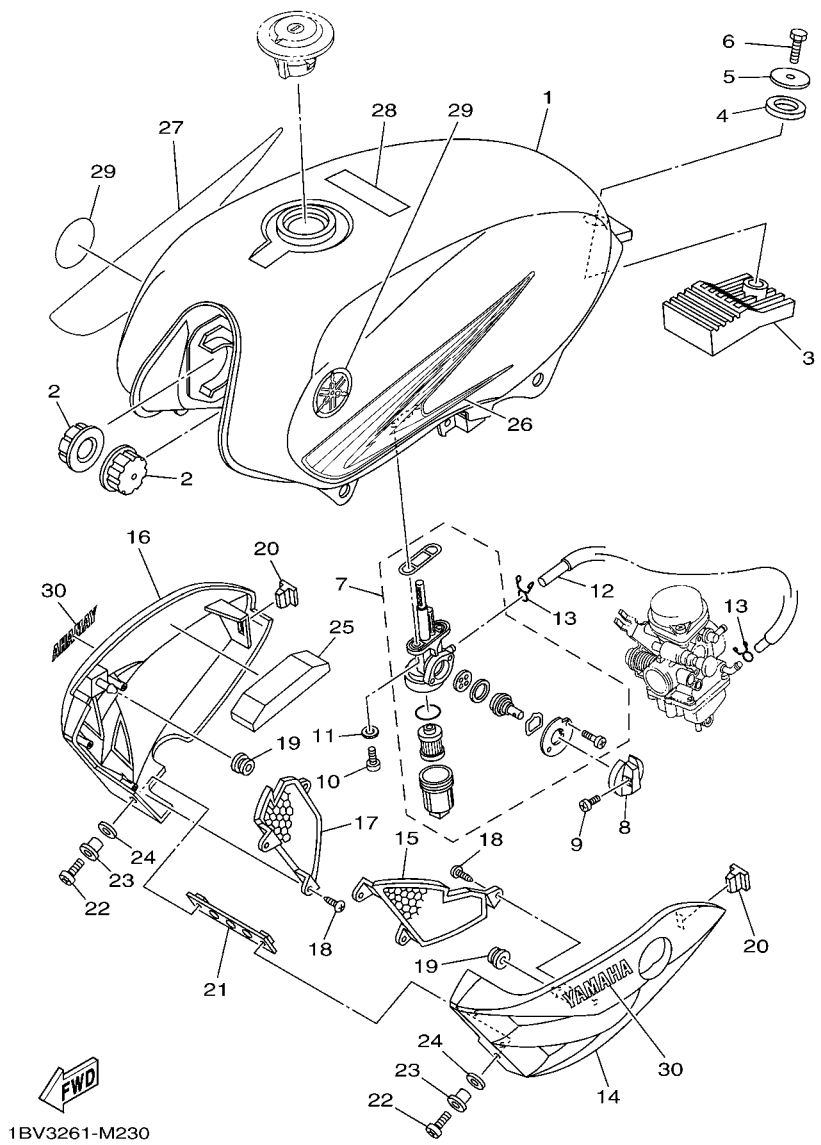

REF. Nº	CODIGO Nº PART NO.	DESCRIPCION DESCRIPTION	1BV3					OBSERVACIONES REMARKS
1	1BV–F4110–00–P0	DEPOSITO DE COMBUSTIBLE COMP. FUEL TANK COMP.	1					UR PARA VRC7 UR FOR VRC7
	1BV–F4110–00–P1	DEPOSITO DE COMBUSTIBLE COMP. FUEL TANK COMP.	1					UR PARA SMX UR FOR SMX
	1BV–F4110–00–P2	DEPOSITO DE COMBUSTIBLE COMP. FUEL TANK COMP.	1					UR PARA DPBMC UR FOR DPBMC
	1BV–F4110–00–GE	DEPOSITO DE COMBUSTIBLE COMP. FUEL TANK COMP.	1					UR PARA SW UR FOR SW
2	4FP–F4181–00	AMORTIGUADOR DE MONTAJE 1 DAMPER, LOCATING 1	2					
3	5VL–F4183–00	AMORTIGUADOR DE MONTAJE 3 DAMPER, LOCATING 3	1					
4	5VL–F4182–00	AMORTIGUADOR DE MONTAJE 2 DAMPER, LOCATING 2	1					
5	90201–088P2	ARANDELA PLANA WASHER, PLATE	1					
6	97002–08016	PERNO BOLT	1					
7	5VL–F4500–01	GRIFO DE COMBUSTIBLE 1 FUEL COCK ASSY 1	1					
8	5VL–F4524–01	LLAVE DEL GRIFO LEVER, COCK	1					
9	90157–03800	TORNILLO CABEZA CONICA PLANA SCREW, PAN HEAD	1					
10	90159–06820	TORNILLO CON VALONA SCREW, WITH WASHER	2					
11	90430–05800	JUNTA GASKET	2					
12	4P2–F4311–00	TUBO DE COMBUSTIBLE 1 PIPE, FUEL 1	1					
13	90467–09854	PRESILLA CLIP	2					
14	1BV–F137W–00–P0	CUBIERTA DE GUIA DE AIRE 1 SCOOP, AIR 1	1					UR PARA VRC7 UR FOR VRC7
	1BV–F137W–00–P1	CUBIERTA DE GUIA DE AIRE 1 SCOOP, AIR 1	1					UR PARA SMX UR FOR SMX
	1BV–F137W–00–P2	CUBIERTA DE GUIA DE AIRE 1 SCOOP, AIR 1	1					UR PARA DPBMC UR FOR DPBMC
	1BV–F137W–00–GE	CUBIERTA DE GUIA DE AIRE 1 SCOOP, AIR 1	1					UR PARA SW UR FOR SW
15	5VL–F137U–20	GUIA DE AIRE 1 GUIDE, AIR 1	1					
16	1BV–F137X–00–P0	CUBIERTA DE GUIA DE AIRE 2 SCOOP, AIR 2	1					UR PARA VRC7 UR FOR VRC7
	1BV–F137X–00–P1	CUBIERTA DE GUIA DE AIRE 2 SCOOP, AIR 2	1					UR PARA SMX UR FOR SMX
	1BV–F137X–00–P2	CUBIERTA DE GUIA DE AIRE 2 SCOOP, AIR 2	1					UR PARA DPBMC UR FOR DPBMC
	1BV–F137X–00–GE	CUBIERTA DE GUIA DE AIRE 2 SCOOP, AIR 2	1					UR PARA SW UR FOR SW
17	5VL–F137V–20	GUIA DE AIRE 2 GUIDE, AIR 2	1					
18	97702–40014	TORNILLO ROSCA HEMBRA SCREW, TAPPING	6					

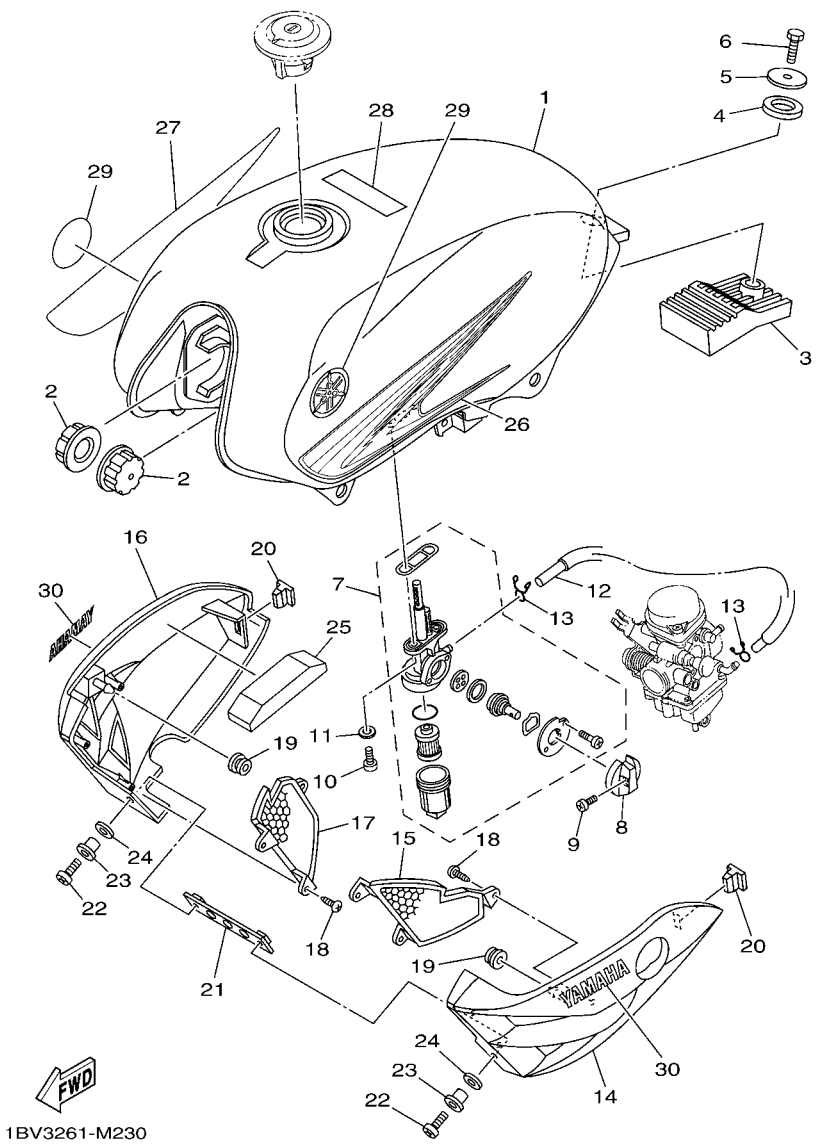

FIG. 23 DEPOSITO DE COMBUSTIBLE FUEL TANK

REF. Nº	CODIGO Nº PART NO.	DESCRIPCION DESCRIPTION	1BV3					OBSERVACIONES REMARKS
19	90480–13837	TAPON GROMMET	2					
20	5VL–F1778–00	AMORTIGUADOR DE MONTAJE DAMPER, LOCATING 1	2					
21	5VL–F4216–11	SOPORTE STAY	1					
22	98512–06016	TORNILLO SCREW, PAN HEAD	2					
23	90387–06879	ESPACIADOR COLLAR	2					
24	90202–09800	ARANDELA DE PLANA WASHER, PLATE	2					
25	5VL–F414H–00	EQUILIBRIO, CUBIERTA DAMPER, PLATE 1	1					
26	1BV–F4244–H0	CALCOMANIA DEPOSITO COMBUST.1 GRAPHIC, FUEL TANK 1	1					UR PARA VRC7 UR FOR VRC7
	1BV–F4244–J0	CALCOMANIA DEPOSITO COMBUST.1 GRAPHIC, FUEL TANK 1	1					UR PARA SMX UR FOR SMX
	1BV–F4244–K0	CALCOMANIA DEPOSITO COMBUST.1 GRAPHIC, FUEL TANK 1	1					UR PARA DPBMC UR FOR DPBMC
	1BV–F4244–L0	CALCOMANIA DEPOSITO COMBUST.1 GRAPHIC, FUEL TANK 1	1					UR PARA SW UR FOR SW
27	1BV–F4245–H0	CALCOMANIA DEPOSITO COMBUST.2 GRAPHIC, FUEL TANK 2	1					UR PARA VRC7 UR FOR VRC7
	1BV–F4245–J0	CALCOMANIA DEPOSITO COMBUST.2 GRAPHIC, FUEL TANK 2	1					UR PARA SMX UR FOR SMX
	1BV–F4245–K0	CALCOMANIA DEPOSITO COMBUST.2 GRAPHIC, FUEL TANK 2	1					UR PARA DPBMC UR FOR DPBMC
	1BV–F4245–L0	CALCOMANIA DEPOSITO COMBUST.2 GRAPHIC, FUEL TANK 2	1					UR PARA SW UR FOR SW
28	5PA–21568–01	ETIQUETA DE PRECAUCION LABEL, WARNING	1					
29	1BV–F411B–00	EMBLEMA EMBLEM	2					
30	99236–00080	EMBLEMA, YAMAHA EMBLEM, YAMAHA	2					UR EXCEPT PARA SW UR EXCEPT FOR SW
	99234–00080	EMBLEMA, YAMAHA EMBLEM, YAMAHA	2					UR PARA SW UR FOR SW

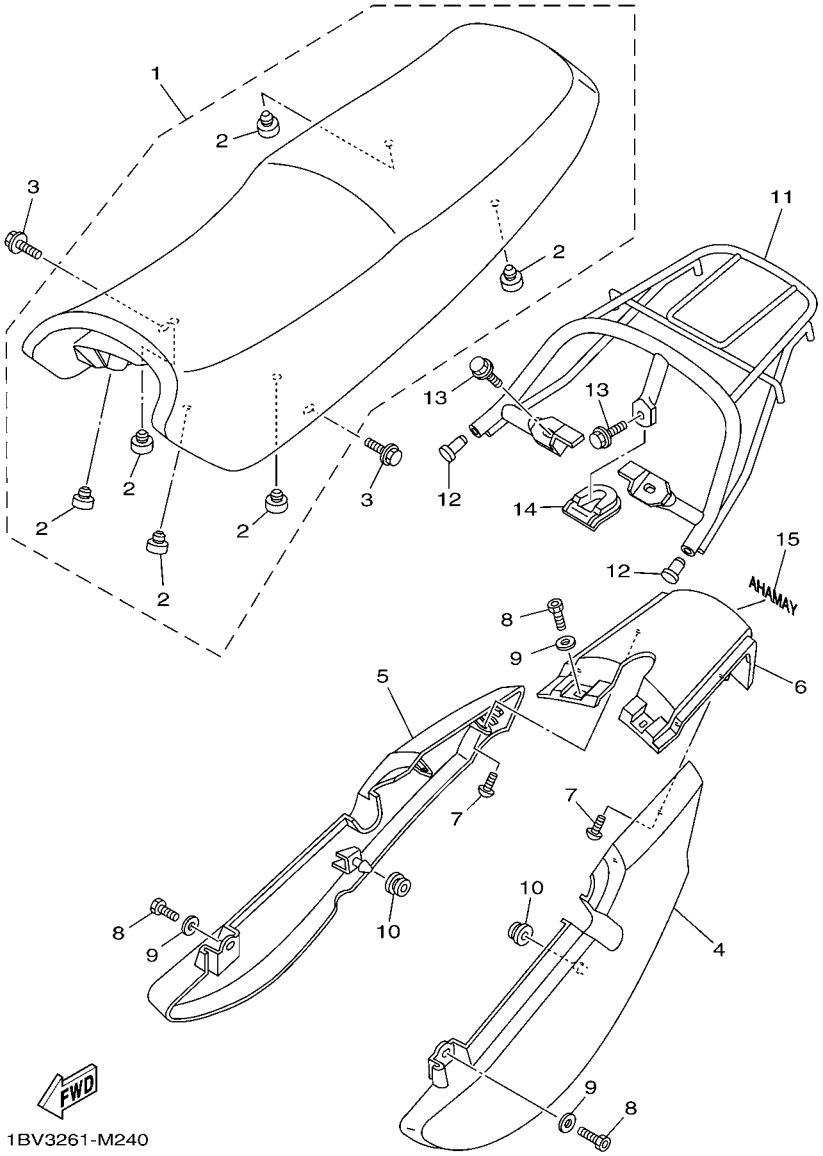

FIG. 24 ASIENTO SEAT

REF. Nº	CODIGO Nº PART NO.	DESCRIPCION DESCRIPTION	1BV3					OBSERVACIONES REMARKS
1	5VL–F4730–12	SILLIN DOBLE COMPLETO DOUBLE SEAT ASSY	1					
2	4TU–F4741–00	.COJIN DE ASIENTO .PAD, SEAT	6					
3	90119–06869	TORNILLO CON ARANDELA BOLT, WITH WASHER	2					
4	1BV–F471K–00–P0	CUBIERTA, DE COLA 1 COVER, TAIL 1	1					UR PARA VRC7 UR FOR VRC7
	1BV–F471K–00–P1	CUBIERTA, DE COLA 1 COVER, TAIL 1	1					UR PARA SMX UR FOR SMX
	1BV–F471K–00–P2	CUBIERTA, DE COLA 1 COVER, TAIL 1	1					UR PARA DPBMC UR FOR DPBMC
	1BV–F471K–00–GE	CUBIERTA, DE COLA 1 COVER, TAIL 1	1					UR PARA SW UR FOR SW
5	1BV–F472K–00–P0	CUBIERTA, DE COLA 2 COVER, TAIL 2	1					UR PARA VRC7 UR FOR VRC7
	1BV–F472K–00–P1	CUBIERTA, DE COLA 2 COVER, TAIL 2	1					UR PARA SMX UR FOR SMX
	1BV–F472K–00–P2	CUBIERTA, DE COLA 2 COVER, TAIL 2	1					UR PARA DPBMC UR FOR DPBMC
	1BV–F472K–00–GE	CUBIERTA, DE COLA 2 COVER, TAIL 2	1					UR PARA SW UR FOR SW
6	1BV–F4756–00–P0	CUBIERTA DE COLA COVER, TAIL	1					UR PARA VRC7 UR FOR VRC7
	1BV–F4756–00–P1	CUBIERTA DE COLA COVER, TAIL	1					UR PARA SMX UR FOR SMX
	1BV–F4756–00–P2	CUBIERTA DE COLA COVER, TAIL	1					UR PARA DPBMC UR FOR DPBMC
	1BV–F4756–00–GE	CUBIERTA DE COLA COVER, TAIL	1					UR PARA SW UR FOR SW
7	97702–50012	TORNILLO ROSCA HEMBRA SCREW, TAPPING	4					
8	97002–06016	PERNO BOLT	4					
9	90201–06850	ARANDELA PLANA WASHER, PLATE	4					
10	90480–01868	TAPON GROMMET	2					
11	5VL–F4773–00	MANIJA DE ASIENTO HANDLE, SEAT	1					
12	5VL–F4481–00	TAPON PLUG	2					
13	95812–08016	TORNILLO DE REBORDE BOLT, FLANGE	3					
14	5VL–F4796–01	CUBIERTA COVER	1					
15	99236–00080	EMBLEMA, YAMAHA EMBLEM, YAMAHA	1					UR EXCEPT PARA SW UR EXCEPT FOR SW
	99234–00080	EMBLEMA, YAMAHA EMBLEM, YAMAHA	1					UR PARA SW UR FOR SW

FIG. 25 RUEDA DELANTERA FRONT WHEEL

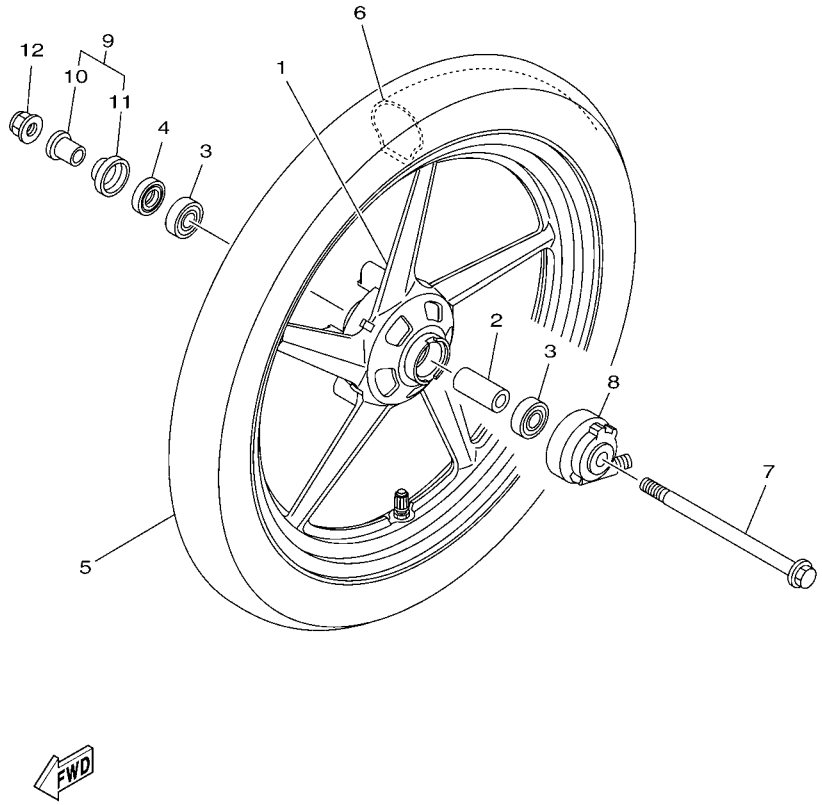

REF. Nº	CODIGO Nº PART NO.	DESCRIPCION DESCRIPTION	1BV3					OBSERVACIONES REMARKS
1	1PX–F5168–00–33	RUEDA FUNDIDA DELANTERA CAST WHEEL, FRONT	1					YB YB
2	90560–15293	SEPARADOR SPACER	1					
3	93306–202Y4	COJINETE BEARING	2					
4	93102–20857	SELLO ACEITE OIL SEAL	1					
5	94127–18830	NEUMATICO (2.75-18 M/C 42P) TIRE (2.75-18 M/C 42P ME22)	1					METZELER METZELER
6	94227–18810	TUBO (2.75-18) TUBE (2.75-18)	1					PIRELLI PIRELLI
7	5VL–F5181–11	EJE DE LA RUEDA AXLE, WHEEL	1					
8	4GU–F5190–12	UNIDAD DE ENGRANAJE COMPLETA GEAR UNIT ASSY	1					
9	4GU–F511X–01	COLLAR COLLAR	1					
10	90387–158K1	.ESPACIADOR .COLLAR	1					
11	4GU–F5118–00	.CUBIERTA DE MASA PARA POLVO .COVER, HUB DUST	1					
12	95602–14200	TUERCA DE AUTO-CIERRE NUT, SELF-LOCKING	1					

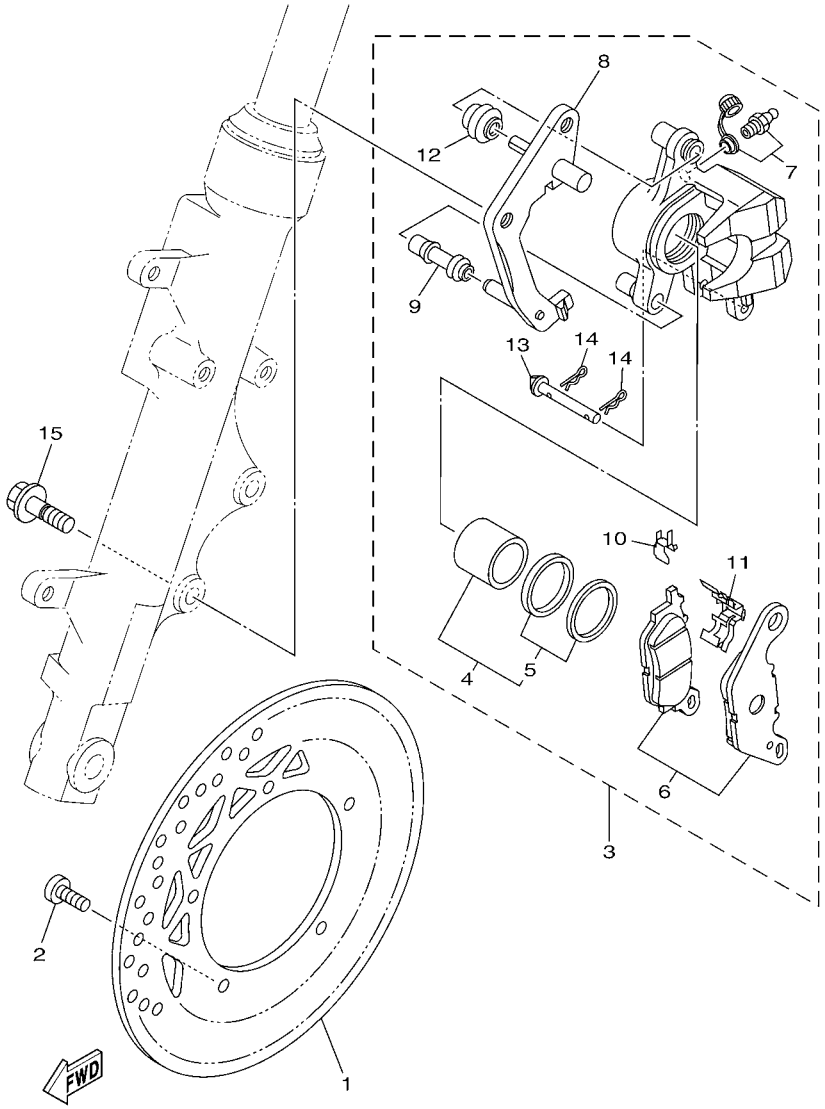

FIG. 26 CALIBRE FRENO DELANTERA FRONT BRAKE CALIPER

REF. Nº	CODIGO Nº PART NO.	DESCRIPCION DESCRIPTION	1BV3					OBSERVACIONES REMARKS
1	3D9–F582U–10	DISCO DE FRENO (DERECHO) DISK, BRAKE (RIGHT)	1					
2	90111–08805	TORNILLO BOLT,HEX. SOCKET BUTTON	5					
3	3D9–F580U–01	CALIBRE COMPLETO (DERECHO) CALIPER ASSY (RIGHT)	1					
4	4S5–W0057–00	.PISTON COMPLETO PINZA .PISTON ASSY, CALIPER	1					
5	4S5–W0047–00	..JUEGO DE RETENES DE PINZA ..CALIPER SEAL KIT	1					
6	4S5–W0045–00	.JUEGO DE COJIN DE FRENO .BRAKE PAD KIT	1					
7	4S5–W0048–01	.CJTO TORNILLO DE PURGA .BLEED SCREW KIT	1					
8	4S5–F5921–01	.MENSULA DE SOPORTE .BRACKET, SUPPORT	1					
9	4S5–F5937–00	.FUNDA .BOOT 2	1					
10	4S5–F5939–00	.PRESILLA .CLIP, PAD	1					
11	4S5–F5919–00	.SOPORTE DE PASTILLAS .SUPPORT, PAD	1					
12	4S5–F5917–00	.FUNDA DE CALIBRE .BOOT, CALIPER	1					
13	4S5–F5924–01	.PASADOR .PIN, PAD	1					
14	4S5–F5925–00	.PRESILLA .CLIP	2					
15	90105–10831	TORNILLO BOLT, FLANGE	2					

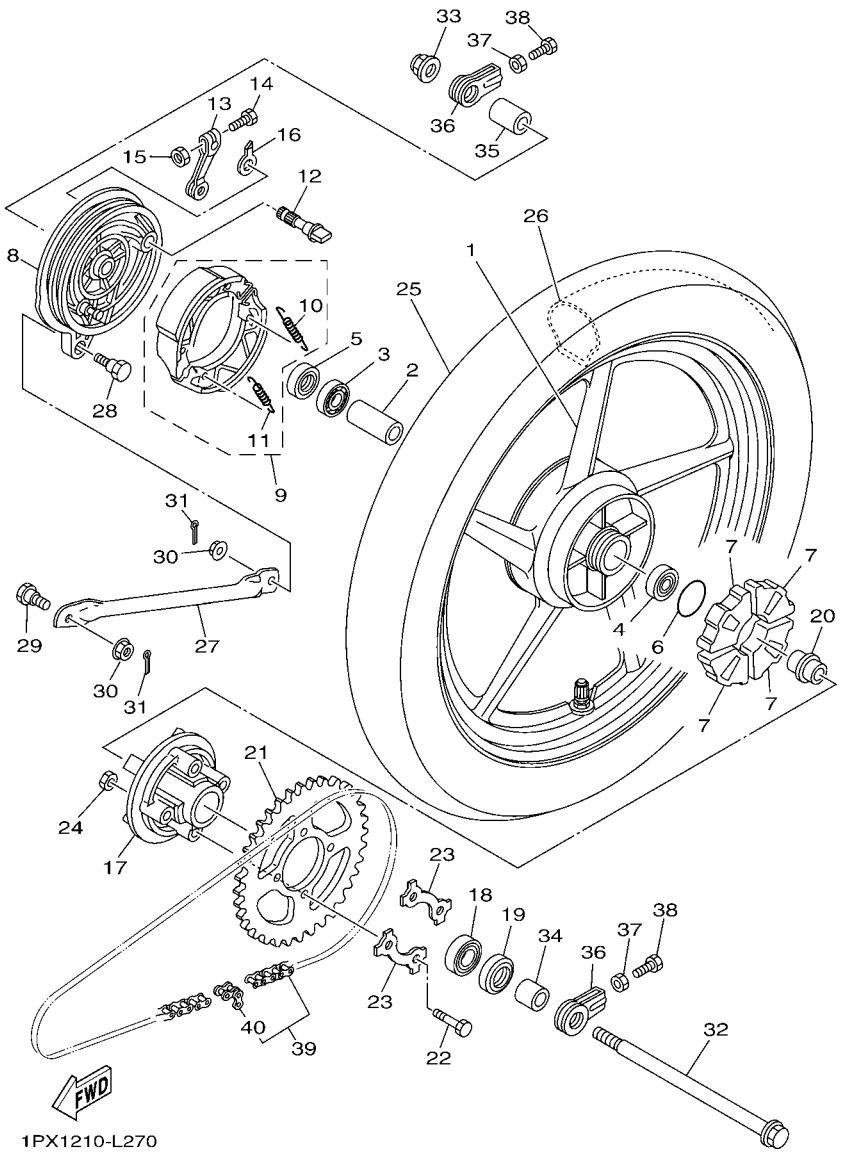

FIG. 27 RUEDA TRASERA REAR WHEEL

REF. Nº	CODIGO Nº PART NO.	DESCRIPCION DESCRIPTION	1BV3					OBSERVACIONES REMARKS
1	1PX–F5338–00–33	RUEDA FUNDIDA TRASERA CAST WHEEL, REAR	1					YB YB
2	90387–15809	ESPACIADOR COLLAR	1					
3	93306–202Y4	COJINETE BEARING	1					
4	93306–252X5	COJINETE BEARING	1					
5	93104–22802	SELLO ACEITE OIL SEAL	1					
6	93210–42807	ANILLO O O-RING	1					
7	1KL–F5364–00	AMORTIGUADOR DAMPER	4					
8	5VL–F5321–01–33	PLACA DE ZAPATA DE FRENO PLATE, BRAKE SHOE	1					YB YB
9	3D9–W2533–00	JUEGO DE ZAPATA DE FRENO BRAKE SHOE KIT	1					
10	90506–12801	.RESORTE DE TENSION .SPRING, TENSION	1					
11	90506–15802	.RESORTE DE TENSION .SPRING, TENSION	1					
12	4GU–F5351–02	ARBOL DE LEVAS CAMSHAFT	1					
13	5VL–F5355–01	PALANCA DE ARBOL DE LEVAS LEVER, CAMSHAFT	1					
14	90101–06848	TORNILLO BOLT	1					
15	95302–06600	TUERCA NUT	1					
16	4GU–F533A–01	PLACA INDICADOR PLATE, INDICATOR	1					
17	5VL–F5366–00	EMBRAGUE DE MASA CLUTCH, HUB	1					
18	93306–004YL	COJINETE BEARING	1					
19	93106–26804	SELLO ACEITE OIL SEAL	1					
20	5VL–F5387–01	EJE DE CORONA AXLE, SPROCKET	1					
21	2CD–F5445–00	CORONA (45D) SPROCKET, DRIVEN (45T)	1					
22	90109–08864	PERNO BOLT	4					
23	5LK–F5412–01	ARANDELA WASHER	2					
24	90179–08639	TUERCA NUT	4					
25	94109–18809	NEUMATICO TIRE (90/90-18 M/C 57P)	1					METZELER METZELER
26	94227–18810	TUBO (2.75-18) TUBE (2.75-18)	1					PIRELLI PIRELLI
27	2CD–F5371–00	BARRA TENSORA BAR, TENSION	1					

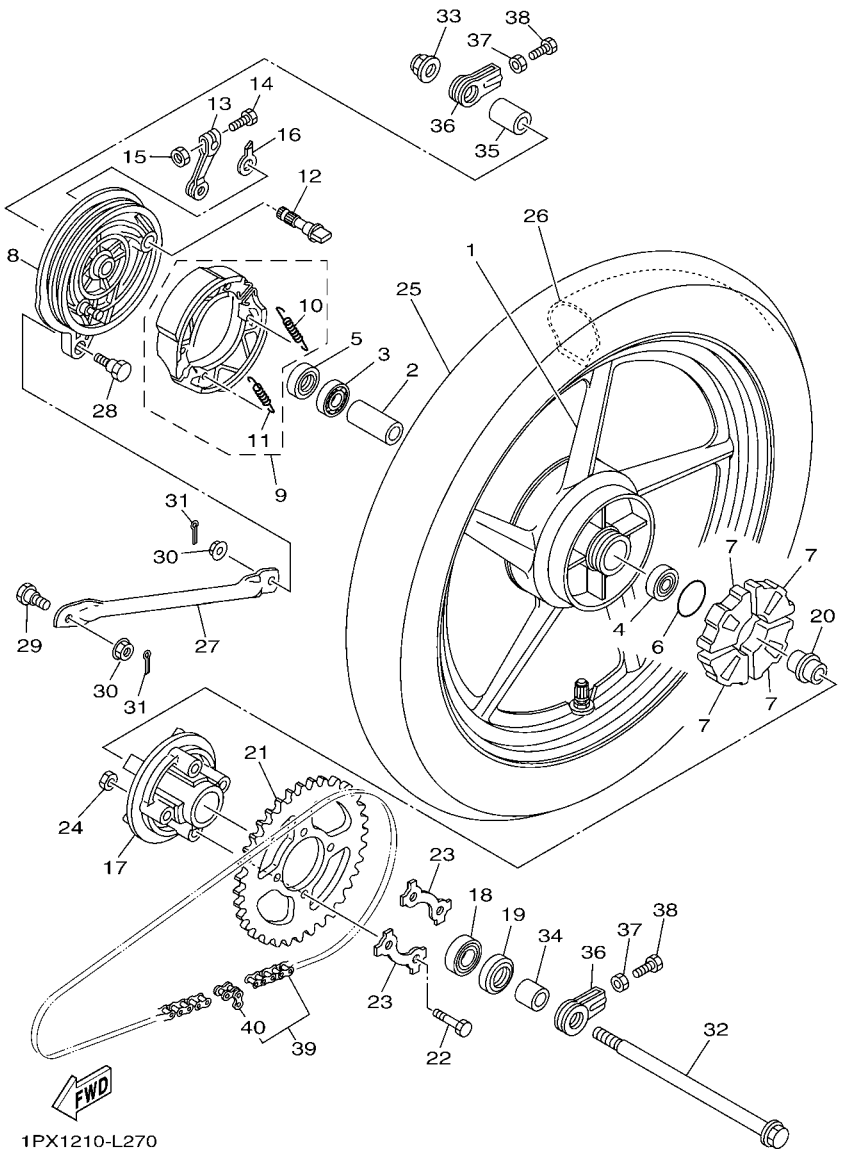

FIG. 27 RUEDA TRASERA REAR WHEEL

REF. Nº	CODIGO Nº PART NO.	DESCRIPCION DESCRIPTION	1BV3					OBSERVACIONES REMARKS
28	90109–08847	PERNO BOLT	1					
29	90109–08848	PERNO BOLT	1					
30	95702–08500	TUERCA DE BRIDA NUT, FLANGE	2					
31	91402–20012	CHAVETA PIN, COTTER	2					
32	5VL–F5381–01	EJE DE RUEDA AXLE, WHEEL	1					
33	95602–14200	TUERCA DE AUTO-CIERRE NUT, SELF-LOCKING	1					
34	5VL–F5386–01	COLLAR EJE DE RUEDA DENTADA COLLAR, SPROCKET AXLE	1					
35	5VL–F5377–01	COLLAR DE RUEDA COLLAR, WHEEL	1					
36	5VL–F5388–01	TIRADOR DE CADENA 1 PULLER, CHAIN 1	2					
37	95312–08600	TUERCA HEXAGONAL NUT	2					
38	90153–08804	TORNILLO HEXAGONAL SCREW, HEXAGON	2					
39	5VL–F53C0–10	CADENA (DID428H 118L) CHAIN (DID428H 118L)	1					
40	94668–E2001	.CONECTOR DE CADENA (DID 428H) .JOINT, CHAIN (DID 428H)	1					

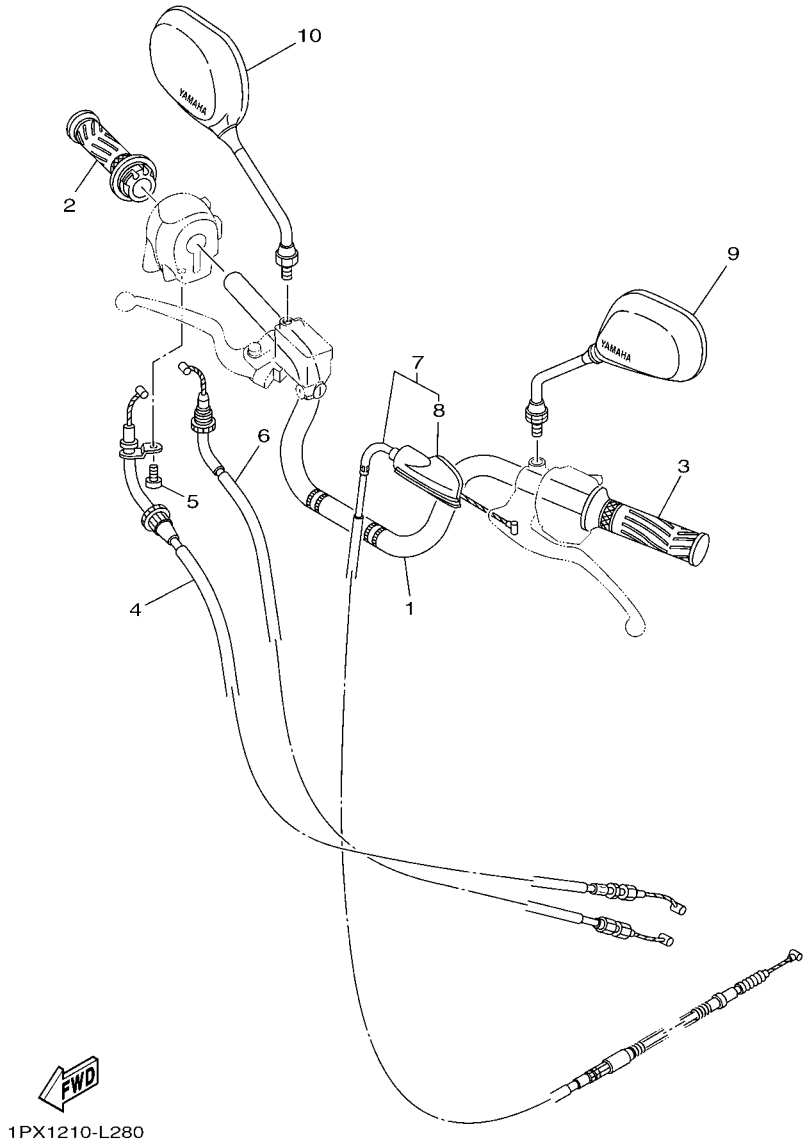

FIG. 28 MANILLAR & CABLE — STEERING HANDLE & CABLE

REF. Nº	CODIGO Nº PART NO.	DESCRIPCION DESCRIPTION	1BV3					OBSERVACIONES REMARKS
1	2CD–F6111–00	MANUBRIO HANDLEBAR	1					
2	2D0–F6240–00	EMPUNADURA COMPLETA GRIP ASSY	1					
3	5VL–F6241–00	EMPUNADURA GRIP	1					
4	2D0–F6311–01	CABLE DE ACELERADOR 1 CABLE, THROTTLE 1	1					
5	98502–05010	TORNILLO SCREW, PAN HEAD	1					
6	2D0–F6312–01	CABLE DE ACELERADOR 2 CABLE, THROTTLE 2	1					
7	5VL–F6335–03	CABLE DE EMBRAGUE CABLE, CLUTCH	1					
8	5VL–F6372–01	.CUBIERTA DE PALANCA DE MANUB 1 .COVER, HANDLE LEVER 1	1					
9	5VL–F6280–12	ESPEJO COMPLETO (IZQUIERDO) REAR VIEW MIRROR ASSY (LEFT)	1					
10	5VL–F6290–12	ESPEJO COMPLETO (DERECHO) REAR VIEW MIRROR ASSY (RIGHT)	1					

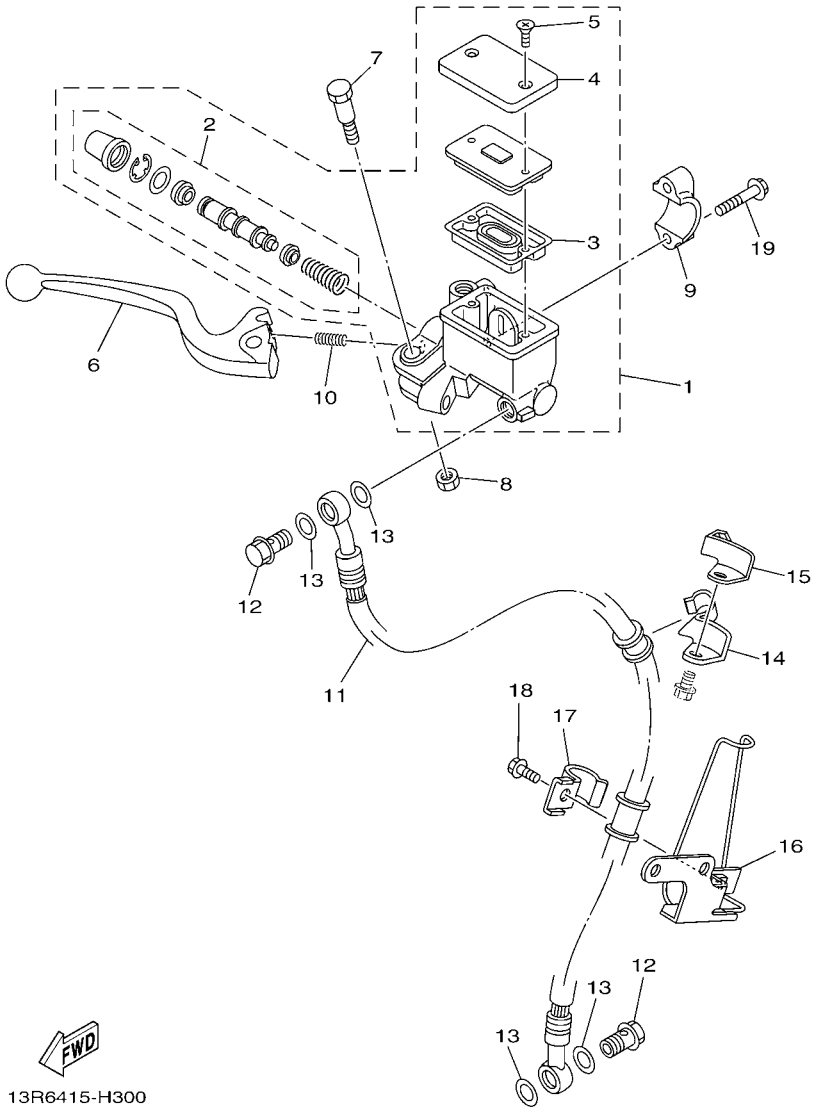

FIG. 29 CILINDRO MAESTRO DELANTERO FRONT MASTER CYLINDER

REF. Nº	CODIGO Nº PART NO.	DESCRIPCION DESCRIPTION	1BV3					OBSERVACIONES REMARKS
1	2B9–W583T–02	CILINDRO MAESTRO COMPLETO MASTER CYLINDER ASSY	1					
2	3D9–W0041–02	.JUEGO DE CILINDRO MAESTRO .CYLINDER KIT, MASTER	1					
3	4KL–F5854–00	.EMPAQUE,DIAFRAGMA .DIAPHRAGM, RESERVOIR	1					
4	4KL–F5852–00	.TAPA DE TANQUE DE RESERVA .CAP, RESERVOIR	1					
5	4KL–F589H–01	.TORNILLO .SCREW	2					
6	5VL–H3922–21	PALANCA 2 LEVER 2	1					
7	3D9–F589F–01	PERNO DE PALANCA BOLT, LEVER	1					
8	3D9–F586F–01	TUERCA AUTOBLOCANTE NUT, U	1					
9	5VL–F5867–00	SOPORTE DE CILINDRO MAESTRO BRACKET, MASTER CYLINDER	1					
10	3D9–F5865–01	RESORTE DE ASIENTO SPRING, LEVER	1					
11	3D9–F5872–11	MANGUERA DE FRENO 1 HOSE, BRAKE 1	1					
12	90401–10811	PERNO DE UNION BOLT, UNION	2					
13	90201–108J9	ARANDELA PLANA WASHER, PLATE	4					
14	5VL–F5887–00	SOPORTE DE MANGUERA FRENO HOLDER, BRAKE HOSE	1					
15	5VL–F5886–00	SOPORTE DE MANGUERA FRENO HOLDER, BRAKE HOSE	1					
16	5VL–F5875–01	SOPORTE DE MANGUERA FRENO 1 HOLDER, BRAKE HOSE 1	1					
17	5VL–F5876–00	SOPORTE DE MANGUERA FRENO 2 HOLDER, BRAKE HOSE 2	1					
18	95022–06016	PERNO, DE BRIDA BOLT, FLANGE	1					
19	95022–06025	PERNO, DE BRIDA BOLT, FLANGE	2					

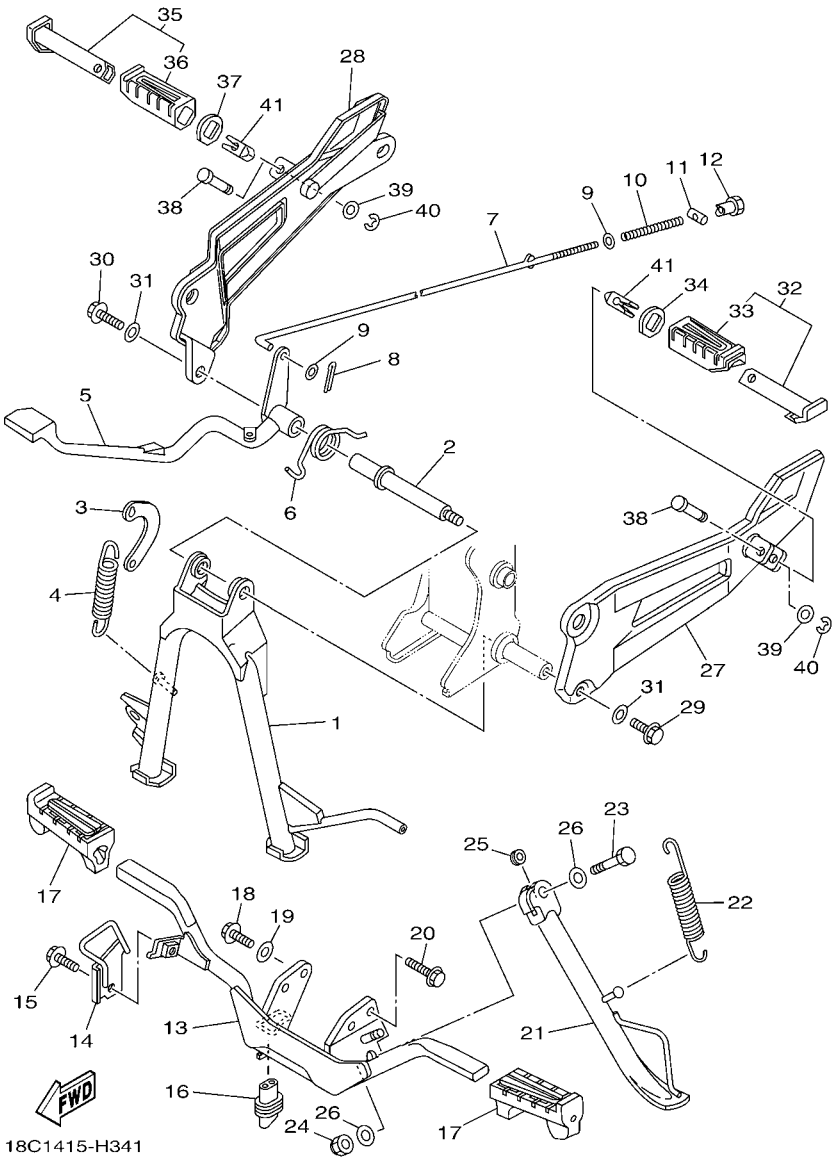

FIG. 30 SOPORTE & APOYAPIE STAND & FOOTREST

REF. Nº	CODIGO Nº PART NO.	DESCRIPCION DESCRIPTION	1BV3					OBSERVACIONES REMARKS
1	2CD–F7111–00	PUNTAL PRINCIPAL STAND, MAIN	1					
2	5VL–F7112–11	EJE DE PUNTAL PRINCIPAL SHAFT, MAIN STAND	1					
3	5VL–F7115–01	CONEXION DE PUNTAL PRINCIPAL LINK, MAIN STAND	1					
4	90506–32800	RESORTE DE TENSION SPRING, TENSION	1					
5	3D9–F7211–00	PEDAL DE FRENO PEDAL, BRAKE	1					
6	90508–40801	RESORTE DE TORSION SPRING, TORSION	1					
7	2CD–F7231–00	VARILLA DE FRENO ROD, BRAKE	1					
8	91402–20012	CHAVETA PIN, COTTER	1					
9	92902–06200	ARANDELA WASHER	2					
10	90501–10806	RESORTE DE COMPRESION SPRING, COMPRESSION	1					
11	90249–12808	PASADOR PIN	1					
12	90179–06826	TUERCA NUT	1					
13	2CD–F7411–00	APOYAPIE 1 FOOTREST 1	1					
14	18C–F743H–00	TOPE, 3 STOPPER, 3	1					
15	90119–06869	TORNILLO CON ARANDELA BOLT, WITH WASHER	1					
16	5VL–H2109–00	UNION, TUBO JOINT, HOSE	1					
17	5VL–F7413–00	CUBIERTA DE APOYAPIE COVER, FOOTREST	2					
18	95812–08020	TORNILLO DE REBORDE BOLT, FLANGE	1					
19	90201–08840	ARANDELA PLANA WASHER, PLATE	1					
20	95812–08025	TORNILLO DE REBORDE BOLT, FLANGE	1					
21	2CD–F7311–00	PUNTAL LATERAL STAND, SIDE	1					
22	90506–29800	RESORTE DE TENSION SPRING, TENSION	1					
23	90101–10816	TORNILLO BOLT	1					
24	90185–10813	TUERCA AUTOBLOCANTE NUT, SELF-LOCKING	1					
25	3S9–F7313–01	COLLAR COLLAR	1					
26	90201–10831	ARANDELA PLANA WASHER, PLATE	2					
27	2CD–F7452–00	SOPORTE, DE APOYAPIE 1 BRACKET, FOOTREST 1	1					

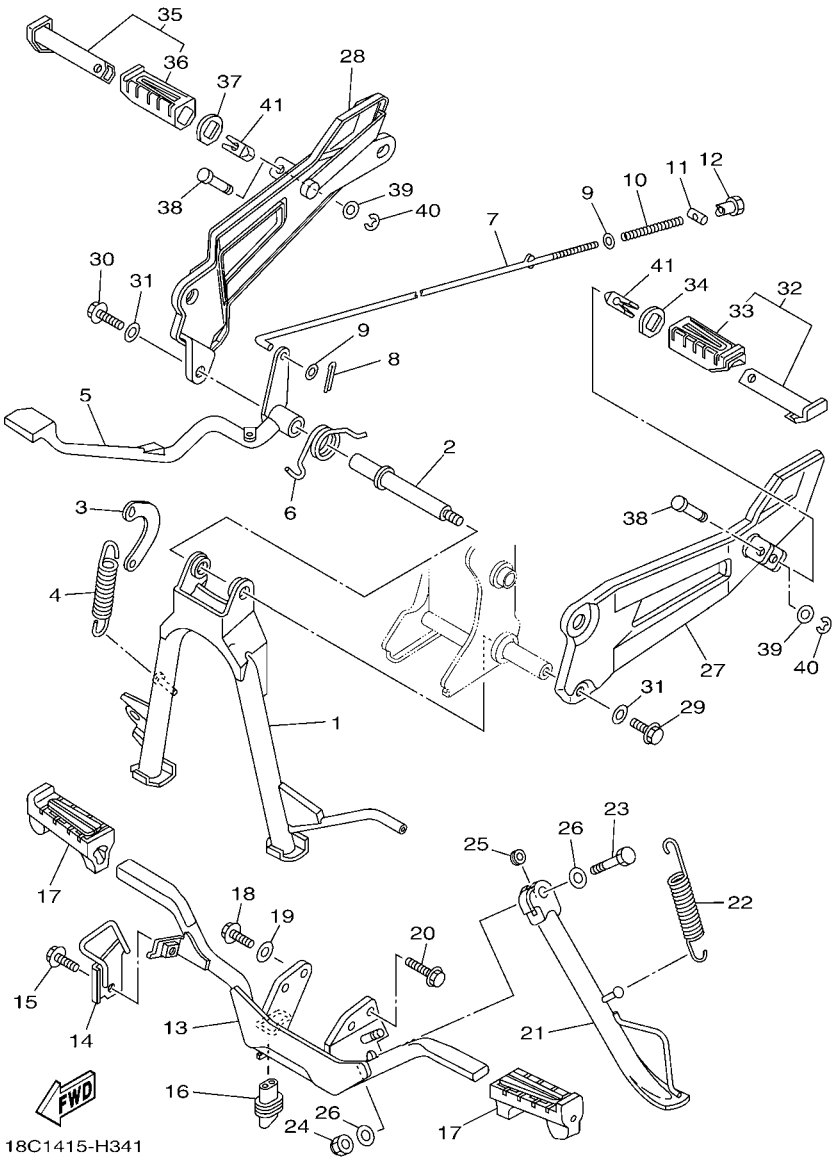

FIG. 30 SOPORTE & APOYAPIE STAND & FOOTREST

REF. Nº	CODIGO Nº PART NO.	DESCRIPCION DESCRIPTION	1BV3					OBSERVACIONES REMARKS
28	2CD–F7462–00	SOPORTE, DE APOYAPIE 2 BRACKET, FOOTREST 2	1					
29	95812–08020	TORNILLO DE REBORDE BOLT, FLANGE	1					
30	95812–08025	TORNILLO DE REBORDE BOLT, FLANGE	1					
31	92902–08200	ARANDELA WASHER	2					
32	2CD–F7430–00	APOYAPIE POSTERIOR COMPLETO 1 REAR FOOTREST ASSY 1	1					
33	5VL–F7433–00	.CUBIERTA APOYAPIE TRASERO .COVER, REAR FOOTREST	1					
34	5VL–F7445–01	PLACE 1 PLATE 1	1					
35	2CD–F7440–00	APOYAPIE POSTERIOR COMPLETO 2 REAR FOOTREST ASSY 2	1					
36	5VL–F7444–00	.CUBIERTA APOYAPIE TRASERO .COVER, REAR FOOTREST	1					
37	5VL–F7445–01	PLACE 1 PLATE 1	1					
38	90249–06800	PASADOR PIN	2					
39	92902–06200	ARANDELA WASHER	2					
40	99002–05600	PRESILLA REDONDA CLIP	2					
41	5VL–F7414–00	AMORTIGUADOR DE APOYAPIE DAMPER, FOOTREST	2					

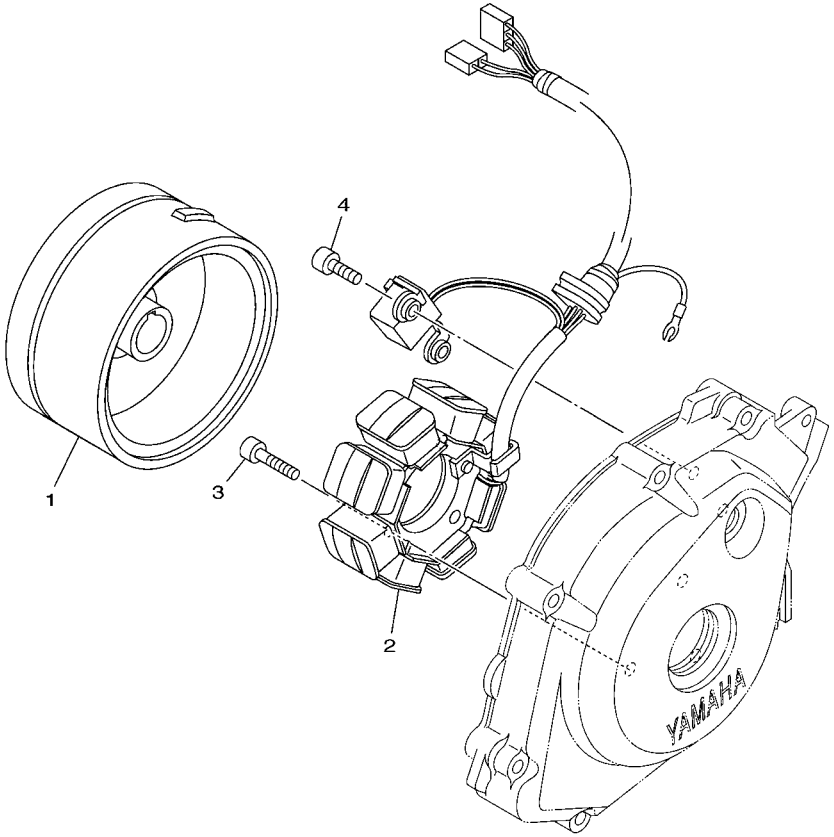

3D91300-D310

FIG. 31 GENERADOR GENERATOR

REF. Nº	CODIGO Nº PART NO.	DESCRIPCION DESCRIPTION	1BV3					OBSERVACIONES REMARKS
1	2D0–H1450–11	ROTOR COMPLETO ROTOR ASSY	1					
2	2D0–H1410–01	ESTATOR COMPLETO STATOR ASSY	1					
3	91312–06025	TORNILLO BOLT	3					
4	91312–06014	TORNILLO BOLT	2					

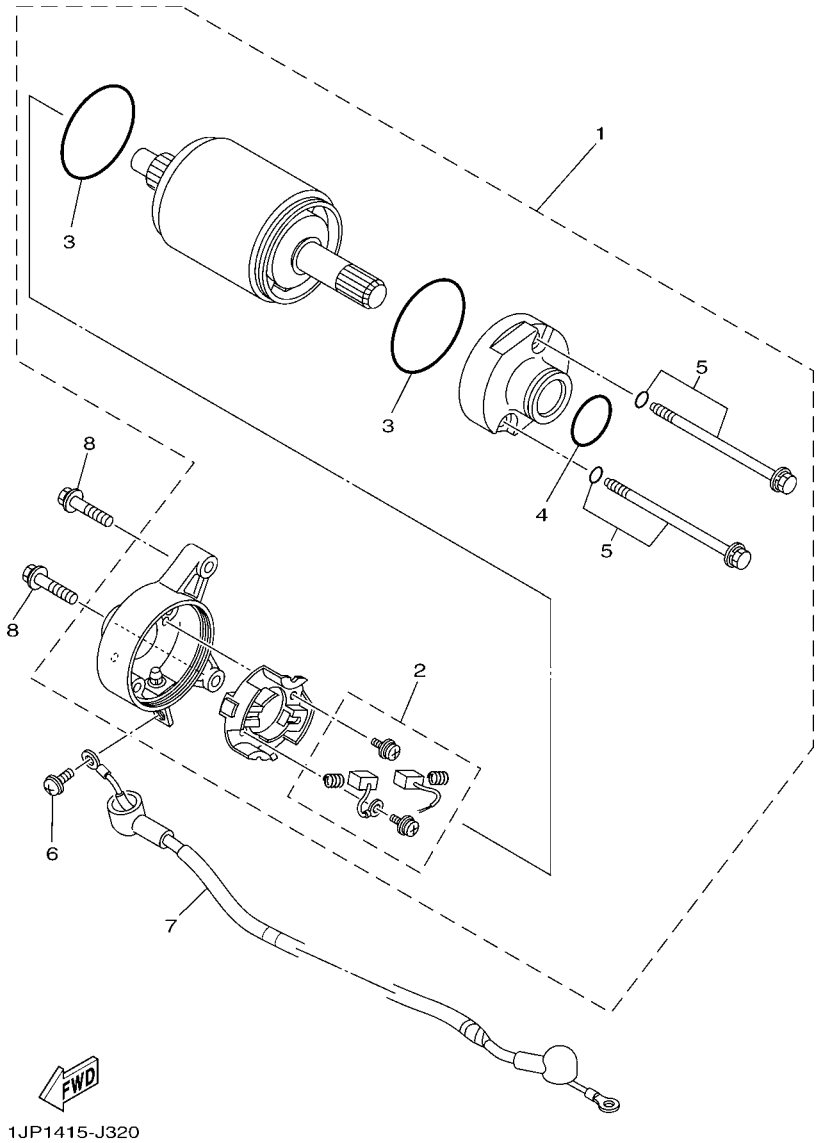

FIG. 32 MOTOR DE ARRANQUE STARTING MOTOR

REF. Nº	CODIGO Nº PART NO.	DESCRIPCION DESCRIPTION	1BV3					OBSERVACIONES REMARKS
1	5VL–H1890–00	MOTOR DE ARRANQUE COMPLETO MOTOR ASSY	1					
2	4FP–H1801–00	.JUEGO DE ESCOBILLA .BRUSH SET	1					
3	93210–55669	.ANILLO O .O-RING	2					
4	4FP–H182L–00	.ANILLO EN O .O-RING 1	1					
5	4FP–H1828–01	.TORNILLO DE EMPUJE 2 .SCREW 2	2					
6	98902–05008	TORNILLO DE LIGAR SCREW, BIND	1					
7	5VL–H183G–01	CABLE DEL MOTOR COMPL. CORD COMP.	1					
8	95022–06025	PERNO, DE BRIDA BOLT, FLANGE	2					

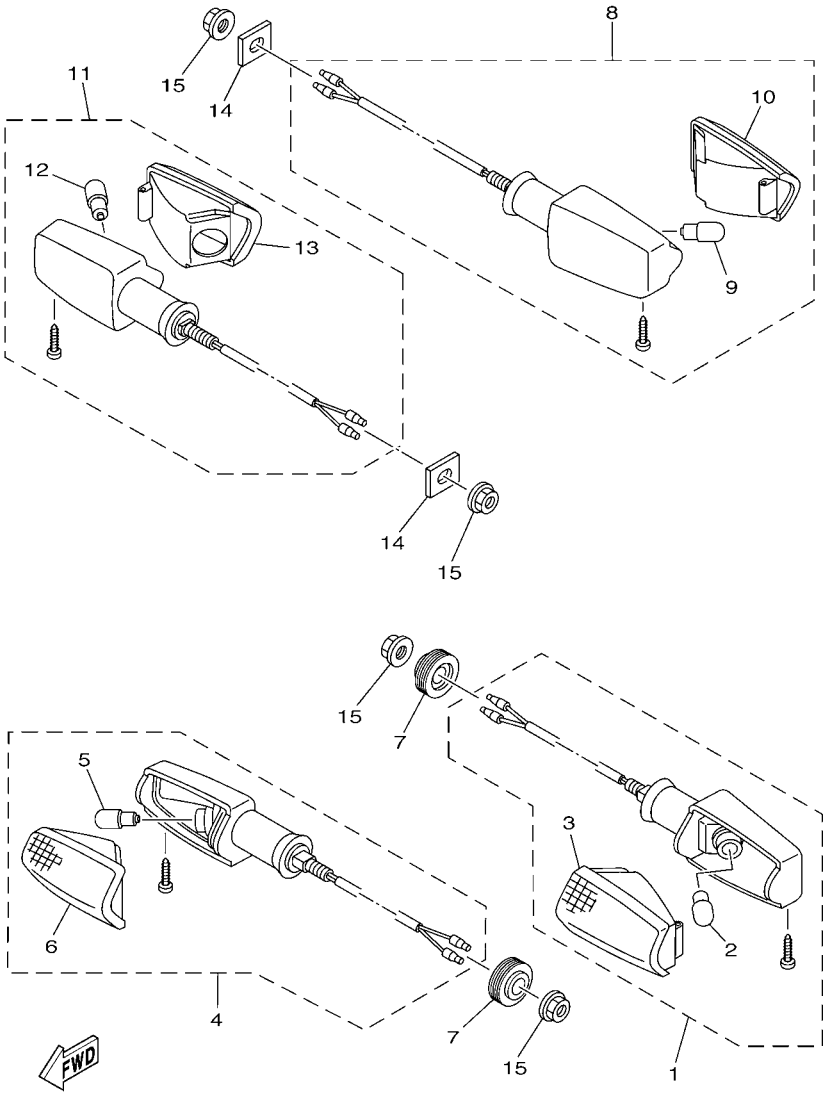

FIG. 33 LUZ DE DESTELLADOR FLASHER LIGHT

REF. Nº	CODIGO Nº PART NO.	DESCRIPCION DESCRIPTION	1BV3					OBSERVACIONES REMARKS
1	5VL–H3310–21	DESTELLADOR DE LUZ DELANT. FRONT FLASHER LIGHT ASSY 1	1					
2	4FP–H3311–00	.BOMBILLA (12V-10W) .BULB, FLASHER (12V-10W)	1					
3	5VL–H333A–21	.LENTES COMPLETO 1 .LENS COMP 1	1					
4	5VL–H3320–21	DESTELLADOR DE LUZ DELANT. FRONT FLASHER LIGHT ASSY 2	1					
5	4FP–H3311–00	.BOMBILLA (12V-10W) .BULB, FLASHER (12V-10W)	1					
6	5VL–H333A–21	.LENTES COMPLETO 1 .LENS COMP 1	1					
7	5VL–H3321–00	AMORTIGUADOR DE DESTELLADOR 1 DAMPER, FLASHER 1	2					
8	5VL–H3330–11	DESTELLADOR DE LUZ TRAS.COMPL. REAR FLASHER LIGHT ASSY 1	1					
9	4FP–H3311–00	.BOMBILLA (12V-10W) .BULB, FLASHER (12V-10W)	1					
10	5VL–H333A–21	.LENTES COMPLETO 1 .LENS COMP 1	1					
11	5VL–H3340–11	DESTELLADOR DE LUZ TRAS.COMPL. REAR FLASHER LIGHT ASSY 2	1					
12	4FP–H3311–00	.BOMBILLA (12V-10W) .BULB, FLASHER (12V-10W)	1					
13	5VL–H333A–21	.LENTES COMPLETO 1 .LENS COMP 1	1					
14	5VL–H3359–01	ARANDELA ESPECIAL WASHER, SPECIAL	2					
15	95702–10500	TUERCA DE BRIDA NUT, FLANGE	4					

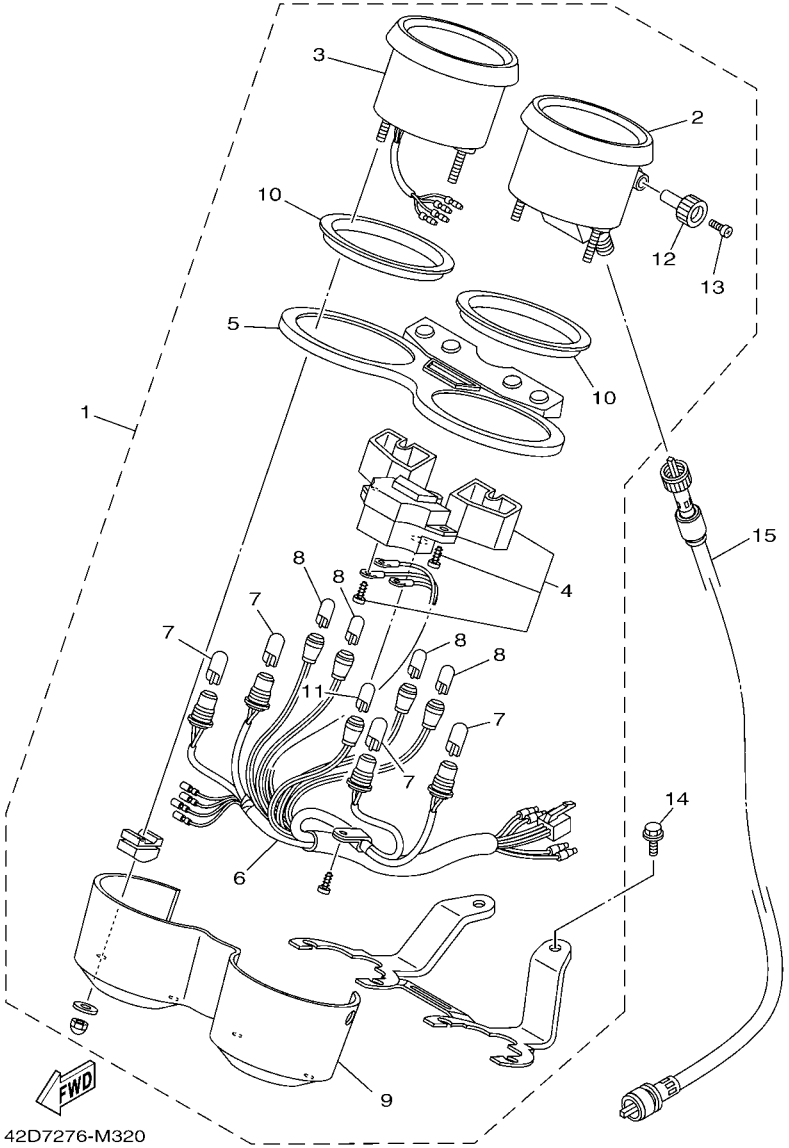

FIG. 34 MEDIDOR METER

REF. Nº	CODIGO Nº PART NO.	DESCRIPCION DESCRIPTION	1BV3					OBSERVACIONES REMARKS
1	5VL–H3500–22	METRO COMPLETO METER ASSY	1					
2	5VL–H3570–10	.VELOCIMETRO COMPLETO .SPEEDOMETER ASSY	1					
3	5VL–H3540–20	.TACOMETRO COMPLETO .TACHOMETER ASSY	1					
4	5VL–H350F–00	.MEDIDOR DE GESTION COMBUSTIBLE .FUEL METER MOVEMENT ASSY	1					
5	5VL–H3559–00	.CUBIERTA DE MEDIDOR .COVER, METER	1					
6	5VL–H3509–20	.ENCASTRE DE CABLE COMPLETO .SOCKET CORD ASSY	1					
7	4FP–H3517–10	.AMPOLLETA (12V-1.7W) .BULB (12V-1.7W)	4					
8	4GU–H3517–10	.AMPOLLETA (14V-3W) .BULB (14V-3W)	4					
9	5VL–H353F–00	.CAJA DE MEDIDOR INFERIOR .CASE, METER LOWER	1					
10	5VL–H3541–00	.AMORTIGUADOR .DAMPER	2					
11	4GU–H3517–20	.AMPOLLETA (12V-1.7W T6.5) .BULB (12V-1.7W T6.5)	1					
12	5VL–H3578–00	.PERILLA MEDIDOR DE RECORRIDO .KNOB, TRIP METER	1					
13	90157–02031	.TORNILLO CABEZA CONICA PLANA .SCREW, PAN HEAD	1					
14	95022–06016	PERNO, DE BRIDA BOLT, FLANGE	2					
15	5VL–H3550–12	CABLE DE VELOCIMETRO COMPLETO SPEEDOMETER CABLE ASSY	1					

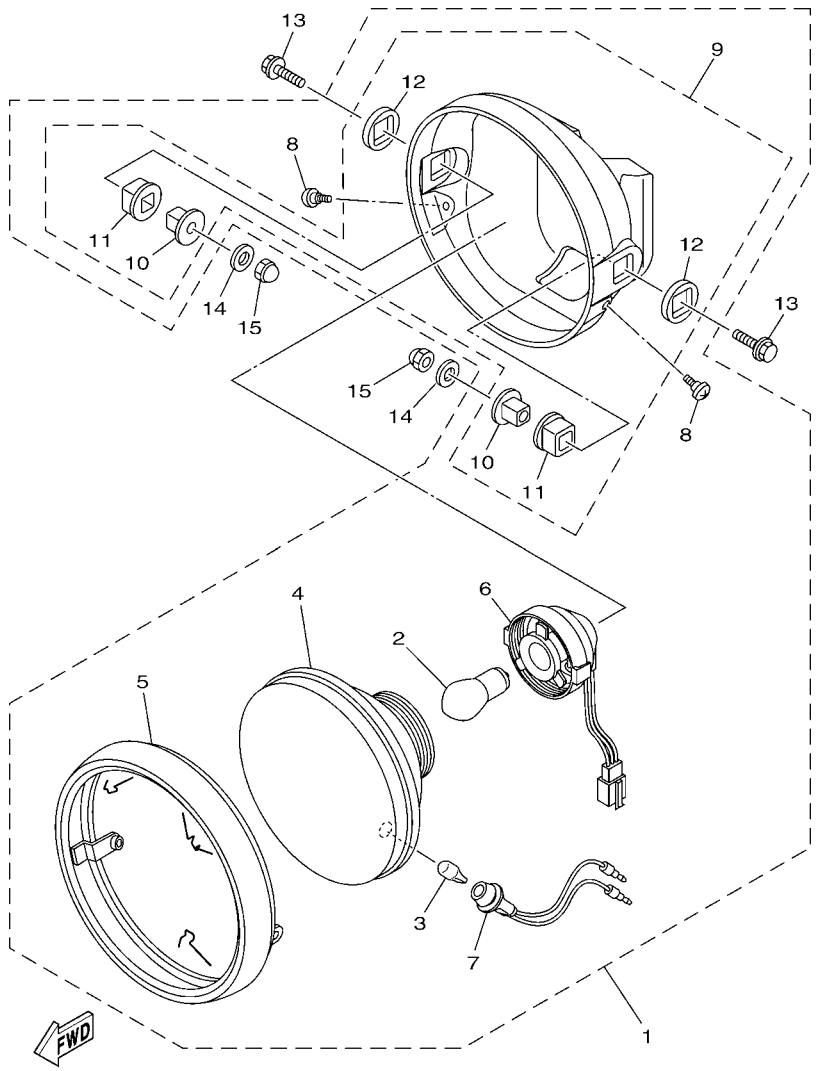

13R6415-H390

FIG. 35 FARO DELANTERO HEADLIGHT

REF. Nº	CODIGO Nº PART NO.	DESCRIPCION DESCRIPTION	1BV3					OBSERVACIONES REMARKS
1	5VL–H4300–23	FARO DELANTERO COMPLETO HEADLIGHT ASSY	1					
2	5VL–H4314–20	.BOMBILLA (12V-35/35W) .BULB, HEADLIGHT (12V-35/35W)	1					
3	5VL–H4347–10	.BOMBILLA (12V-5W) .BULB (12V-5W)	1					
4	5VL–H4310–22	.UNIDAD DE FARO DELANTERO COMPL .HEADLIGHT UNIT ASSY	1					
5	5VL–H4315–21	.ARO DE FARO DELANTERO .RIM, HEADLIGHT	1					
6	5VL–H4312–10	.CABLE COMPLETA .CORD ASSY	1					
7	5VL–H4159–10	.CABLE DE FARO DELANTERO .CORD, HEADLIGHT	1					
8	5VL–H4526–00	.TORNILLO .SCREW	2					
9	5VL–H4330–22	.CUERPO COMPLETO .BODY ASSY	1					
10	5VL–H4145–00	..COLLAR ACCESORIO DE CUERPO ..COLLAR, BODY FITTING	2					
11	5VL–H4163–00	..AMORTIGUADOR ..DAMPER	2					
12	5VL–H4164–00	..AMORTIGUADOR ..DAMPER	2					
13	95023–08030	TORNILLO BOLT	2					
14	90201–08830	ARANDELA PLANA WASHER, PLATE	2					
15	95302–08800	TUERCA NUT, CROWN	2					

FIG. 36 LUZ DE COLA — TAILLIGHT

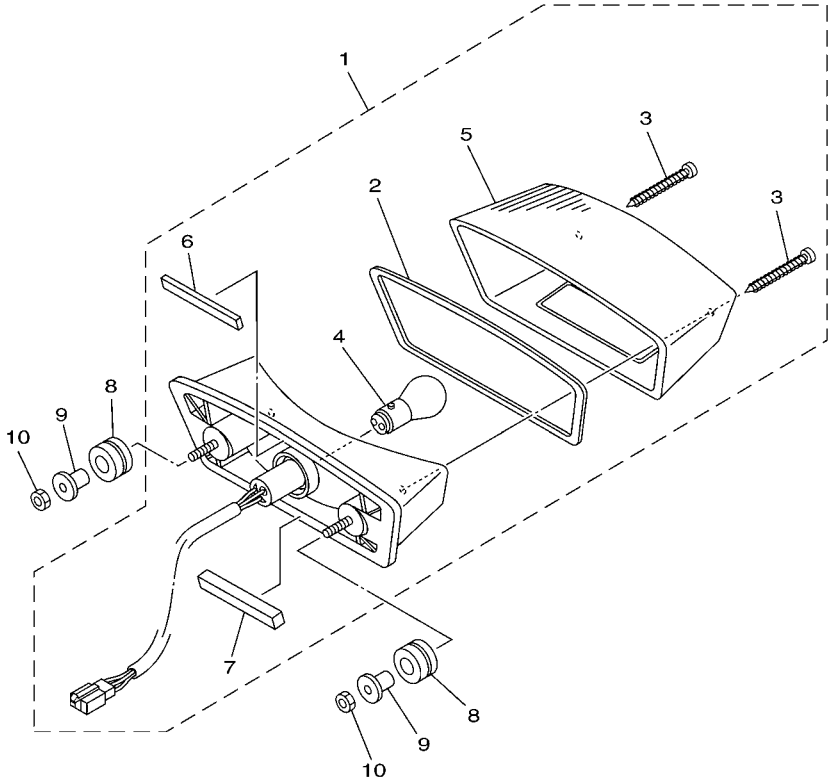

36S3210-L340

REF. Nº	CODIGO Nº PART NO.	DESCRIPCION DESCRIPTION	1BV3					OBSERVACIONES REMARKS
1	5VL–Y8471–21	UNIDAD FARO TRASERO COMPL. TAILLIGHT UNIT ASSY	1					
2	5VL–H4723–00	.EMPAQUE LENTE FARO TRASERO .GASKET, TAIL LENS	1					
3	5VL–H4724–00	.TORNILLO ACCESORIO DE LENTE .SCREW, LENS FITTING	2					
4	5VL–H4714–00	.BOMBILLA (12V-21/5W) .BULB (12V-21/5W)	1					
5	5VL–H472C–01	.LENTE DE FARO TRASERO .LENS, TAILLIGHT	1					
6	5VL–H4753–00	.AMORTIGUADOR .DAMPER	1					
7	5VL–H4736–00	.AMORTIGUADOR DE COLA .DAMPER, TAIL 1	1					
8	90480–14812	TAPON GROMMET	2					
9	90387–06837	ESPACIADOR COLLAR	2					
10	95302–06600	TUERCA NUT	2					

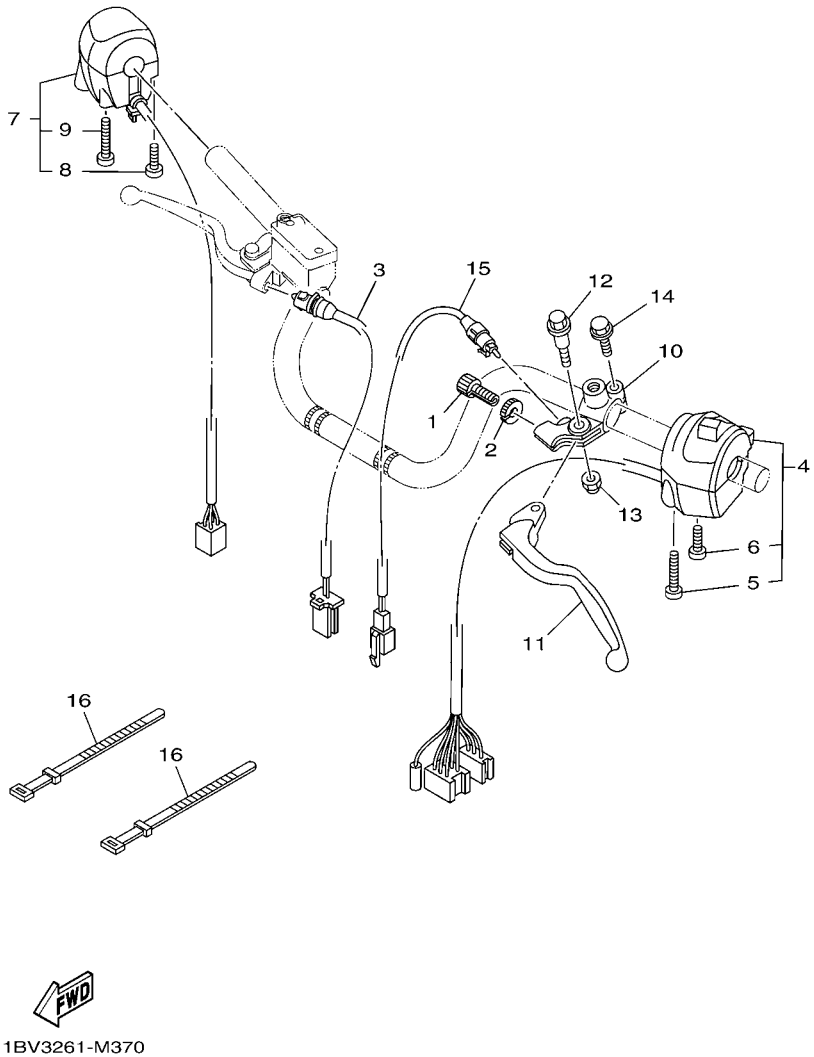

FIG. 37 INTERRUPTOR DE MANILLAR&PALANC HANDLE SWITCH & LEVER

REF. Nº	CODIGO Nº PART NO.	DESCRIPCION DESCRIPTION	1BV3					OBSERVACIONES REMARKS
1	90123–08813	PERNO BOLT	1					
2	90179–08862	TUERCA NUT	1					
3	5VL–H3980–01	INTERRUP. DE PARADA DELANTERO FRONT STOP SWITCH ASSY	1					
4	5VL–H3973–01	INTERRUPTOR DE MANIJA 3 SWITCH, HANDLE 3	1					
5	98507–05043	.TORNILLO DE CABEZA PLANA .SCREW, PAN HEAD	1					
6	98507–05025	.TORNILLO DE CABEZA PLANA .SCREW, PAN HEAD	1					
7	42D–H3976–00	INTERRUPTOR DE MANIJA 1 SWITCH, HANDLE 1	1					
8	98507–05030	.TORNILLO DE CABEZA PLANA .SCREW, PAN HEAD	1					
9	98507–05050	.TORNILLO DE CABEZA PLANA .SCREW, PAN HEAD	1					
10	4FP–H2911–00	SOPORTE DE LEVA 1 HOLDER, LEVER 1	1					
11	5VL–H3912–00	PALANCA 1 LEVER 1	1					
12	90109–06850	PERNO BOLT	1					
13	95602–06100	TUERCA U NUT, U	1					
14	97590–06522	PERNO CON ARANDELA BOLT, WITH WASHER	1					
15	5VL–H2917–11	INTERRUPTOR SWITCH	1					
16	4TU–H3936–00	BANDA DE CABLE DE INTERRUPTOR BAND, SWITCH CORD	2					

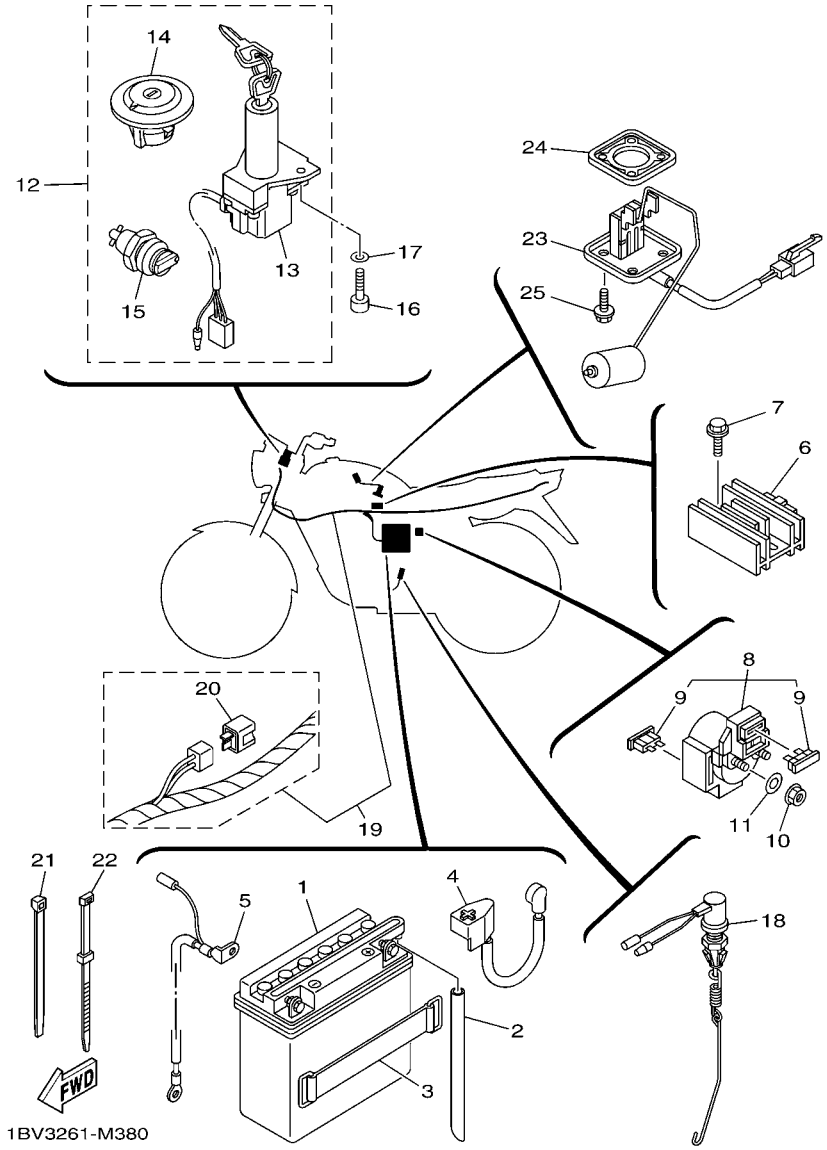

FIG. 38 EQUIPO ELECTRICO 1 ELECTRICAL 1

REF. Nº	CODIGO Nº PART NO.	DESCRIPCION DESCRIPTION	1BV3					OBSERVACIONES REMARKS
1	3D9–H2110–00	BATERIA COMPLETA (GS CB5L-B) BATTERY ASSY (GS CB5L-B)	1					
2	90445–08830	TUBO HOSE	1					
3	5VL–H2131–01	TIRANTE DE BATERIA BAND, BATTERY	1					
4	5VL–H2115–00	CABLE CONDUCTOR POSITIVO WIRE, PLUS LEAD	1					
5	5VL–H2116–00	CABLE CONDUCTOR NEGATIVO WIRE, MINUS LEAD	1					
6	5VL–H1960–00	RECTIFICADOR Y REGULADOR RECTIFIER & REGULATOR ASSY	1					
7	95802–06020	TORNILLO DE REBORDE BOLT, FLANGE	2					
8	5VL–H1940–01	CONJUNTO ARRANCADOR RELEVO STARTER RELAY ASSY	1					
9	4FP–H2151–00	.FUSIBLE (15A) .FUSE (15A)	2					
10	95302–06600	TUERCA NUT	2					
11	90201–068C2	ARANDELA PLANA WASHER, PLATE	2					
12	42D–H2021–00	JUEGO DE LLAVE KEY SET	1					
13	5VL–H2501–02	.LLAVE DE IGNICION COMPLT .MAIN SWITCH STEERING LOCK	1					
14	5VL–F4610–10	.TAPA COMPLETA .CAP ASSY	1					
15	5VL–F1780–01	.CERRADURA COMPLETA .LOCK ASSY	1					
16	91312–06020	TORNILLO BOLT	2					
17	90201–068C2	ARANDELA PLANA WASHER, PLATE	2					
18	3S9–H2530–01	INTERRUPTOR DE PARADA COMPLETO STOP SWITCH ASSY	1					
19	5VL–H2590–43	CONJUNTO DE CABLES WIRE HARNESS ASSY	1					
20	5VL–H1980–10	.CONJUNTO DIODO .DIODE ASSY	1					
21	90464–35820	BRIDA CLAMP	1					
22	5VL–H3936–00	BANDA DE CABLE DE INTERRUPTOR BAND, SWITCH CORD	1					
23	5VL–H5752–01	UNIDAD TRANSM. MED. COMBUST. SENDER UNIT ASSY, FUEL METER	1					
24	4FP–H5753–01	EMPAQUE DE UNIDAD TRANSMISORA GASKET, SENDER UNIT	1					
25	90105–05832	TORNILLO BOLT, FLANGE	4					

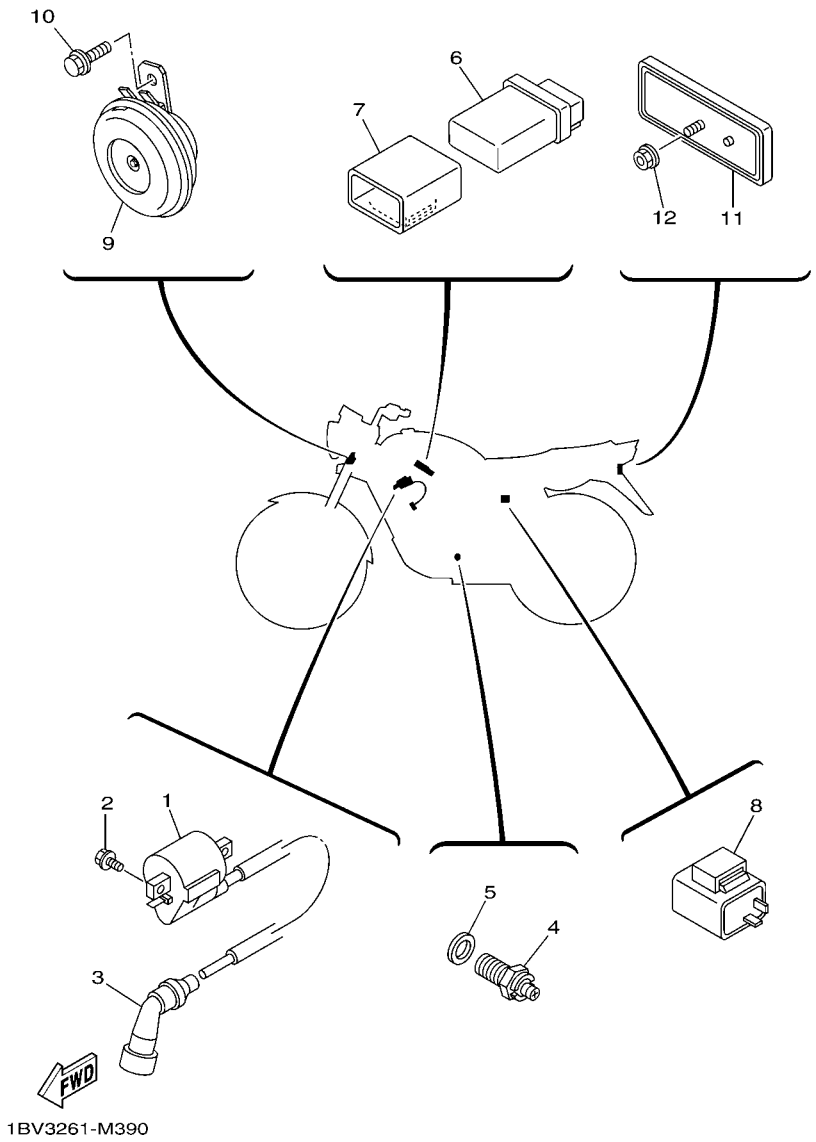

FIG. 39 EQUIPO ELECTRICO 2 ELECTRICAL 2

REF. Nº	CODIGO Nº PART NO.	DESCRIPCION DESCRIPTION	1BV3					OBSERVACIONES REMARKS
1	4P2–H2310–00	BOBINA DE ENCENDIDO COMPLETA IGNITION COIL ASSY	1					
2	95022–06016	PERNO, DE BRIDA BOLT, FLANGE	2					
3	4FP–H2370–01	TAPON DE BUJIA COMPLT PLUG CAP ASSY	1					
4	5VL–H2540–01	INTERRUPTOR NEUTRAL COMPL NEUTRAL SWITCH ASSY	1					
5	90430–10819	JUNTA GASKET	1					
6	5VL–H5540–11	UNIDAD C.D.I. COMPLETA C.D.I. UNIT ASSY	1					
7	5VL–H5546–00	BANDA BAND	1					
8	5VL–H3350–21	RELE DE DESTELLADOR COMPL. FLASHER RELAY ASSY	1					
9	1BK–H3371–00	BOCINA HORN	1					
10	95822–06012	TORNILLO DE REBORDE BOLT, FLANGE	1					
11	4FP–H5130–21	REFLECTOR TRASERO COMPLETO REAR REFLECTOR ASSY	1					
12	95702–05500	TUERCA DE BRIDA NUT, FLANGE	1					

INDICE NUMERICO
NUMERICAL INDEX

CODIGO Nº PART NO.	REF. Nº
2UJ–11133–10	1 – 2
22F–11134–10	1 – 3
5KA–12113–00	3 – 5
30S–14325–00	7 – 19
5PA–21568–01	23 – 28
5VL–E1111–01	1 – 1
5VL–E111F–00	4 – 5
5VL–E1161–00	1 – 8
5VL–E1166–00	9 – 4
4FP–E1167–00	9 – 3
5VL–E1181–00	1 – 16
5VL–E1185–00	1 – 7
5VL–E1186–00	1 – 11
5VL–E1310–00	1 – 19
5VL–E1351–10	1 – 20
5VL–E1422–00	2 – 6
5VL–E1454–00	2 – 8
5VL–E1631–00	2 – 11
5VL–E1633–00	2 – 12
5VL–E1651–00	2 – 5
5VL–E1681–00	2 – 3
5VL–E2111–00	3 – 1
5VL–E2116–01	3 – 4
5VL–E2117–01	3 – 7
5VL–E2118–00	3 – 6
5VL–E2119–00	3 – 3
5VL–E2121–00	3 – 2
5VL–E2151–00	3 – 8
5VL–E2156–00	3 – 10
5VL–E2171–00	4 – 1
5VL–E2176–00	4 – 7
5VL–E2210–01	4 – 15
5VL–E2213–10	4 – 16
5VL–E2231–00	4 – 11
5VL–E2241–00	4 – 12
5VL–E3300–01	5 – 1
5VL–E3324–00	5 – 11
5VL–E3325–00	5 – 2
5VL–E3329–00	5 – 6
4FP–E3411–00	5 – 10
5VL–E3451–00	5 – 12
4P2–E3586–00	6 – 1
5LB–E4153–00	7 – 22
1PX–E4196–00	7 – 26
4P2–E4197–00	7 – 25
5LB–E4214–00	7 – 5
5FY–E4251–00	7 – 27
4P2–E4286–00	7 – 4

CODIGO Nº PART NO.	REF. Nº
5LB–E4292–00	7 – 24
5LB–E4293–00	7 – 12
1BV–E4301–10	7 – 1
4JP–E4323–00	7 – 21
5RS–E4341–00	7 – 6
5RS–E4341–10	7 – 7
5LB–E4342–17	7 – 9
288–E4343–56	7 – 8
50M–E4355–00	7 – 14
4P2–E4371–00	7 – 15
5LB–E4384–00	7 – 20
5LB–E4385–00	7 – 16
5LB–E4386–00	7 – 17
1BV–E4390–00	7 – 18
5VL–E4411–00	6 – 6
5VL–E4412–00	6 – 7
5VL–E4417–00	6 – 18
5VL–E4424–01	6 – 15
5VL–E4437–00	6 – 10
5VL–E443E–00	6 – 14
5VL–E4450–01	6 – 8
5VL–E4452–00	6 – 11
4P2–E4453–00	6 – 9
5VL–E4462–00	6 – 12
5LB–E4592–00	7 – 23
5VL–E4613–00	8 – 12
5VL–E4628–00	8 – 4
1PX–E4710–00	8 – 1
1PX–E4738–00	8 – 9
5VL–E4758–00	8 – 3
5VL–E5191–00	10 – 10
5VL–E5362–00	10 – 19
5VL–E5411–10	10 – 1
5VL–E5418–01	10 – 12
5VL–E5421–00	10 – 14
5VL–E5441–00	9 – 11
5VL–E5451–10	10 – 2
5VL–E5461–10	10 – 15
5VL–E5512–00	12 – 1
5VL–E5517–00	12 – 5
5VL–E5521–00	12 – 2
5VL–E5532–00	12 – 3
4FP–E5580–00	12 – 7
5VL–E5598–00	4 – 13
47V–E5618–00	11 – 11
5VL–E5620–01	11 – 10
4FP–E5641–00	11 – 2
5VL–E5651–00	11 – 7

CODIGO Nº PART NO.	REF. Nº
5VL–E5660–01	11 – 1
4FP–E5666–00	11 – 6
5VL–E6111–00	13 – 1
5VL–E6150–00	13 – 6
5VL–E6154–00	13 – 7
5VL–E6164–10	13 – 17
5VL–E6300–10	13 – 5
5VL–E6321–10	13 – 9
5VL–E6324–00	13 – 10
5VL–E6333–10	13 – 12
5VL–E6337–00	13 – 13
5VL–E6351–00	13 – 11
5VL–E6357–01	13 – 21
5VL–E6371–10	13 – 8
5VL–E6381–02	13 – 22
5VL–E7121–00	14 – 3
5VL–E7131–00	14 – 4
5VL–E7141–00	14 – 5
5VL–E7151–00	14 – 2
5VL–E7211–00	14 – 19
5VL–E7221–00	14 – 14
5VL–E7231–00	14 – 15
5VL–E7241–00	14 – 18
5VL–E7251–00	14 – 13
5VL–E7402–00	14 – 12
5VL–E7411–00	14 – 1
3D9–E7456–01	14 – 27
5VL–E7471–00	14 – 10
5VL–E8101–02	16 – 7
2CD–E8110–00	16 – 9
5VA–E8113–00	16 – 10
5VL–E8140–00	16 – 1
4FP–E8177–00	16 – 3
2D0–E8185–00	15 – 2
5VL–E8337–00	16 – 2
5VL–E8511–00	15 – 5
5VL–E8512–00	15 – 6
5VL–E8513–00	15 – 7
5VL–E8531–00	15 – 8
5VL–E8535–00	15 – 9
1BV–F1110–10	17 – 1
2CD–F1316–00	17 – 2
2CD–F1317–00	17 – 7
2CD–F1318–00	17 – 8
5VL–F137U–20	23 – 15
5VL–F137V–20	23 – 17
1BV–F137W–00–GE	23 – 14
1BV–F137W–00–P0	23 – 14

CODIGO Nº PART NO.	REF. Nº
1BV–F137W–00–P1	23 – 14
1BV–F137W–00–P2	23 – 14
1BV–F137X–00–GE	23 – 16
1BV–F137X–00–P0	23 – 16
1BV–F137X–00–P1	23 – 16
1BV–F137X–00–P2	23 – 16
1BV–F1510–00–GE	18 – 1
1BV–F1510–00–P0	18 – 1
1BV–F1510–00–P1	18 – 1
1BV–F1510–00–P2	18 – 1
5VL–F1513–01	18 – 2
5VL–F1518–01	18 – 5
5VL–F1541–00	18 – 6
5VL–F1611–02	18 – 7
5VL–F1621–00	18 – 12
1BV–F1668–00	20 – 13
4GU–F1685–00	18 – 9
1BV–F1711–00–0X	19 – 1
1BV–F1711–00–1X	19 – 1
1BV–F1711–00–2X	19 – 1
1BV–F1711–00–4X	19 – 1
1BV–F1721–00–0X	19 – 2
1BV–F1721–00–1X	19 – 2
1BV–F1721–00–2X	19 – 2
1BV–F1721–00–4X	19 – 2
5VL–F1746–00	19 – 10
1BV–F174G–50	19 – 12
1BV–F174G–60	19 – 12
1BV–F174G–70	19 – 12
1BV–F174G–80	19 – 12
1BV–F174H–50	19 – 13
1BV–F174H–60	19 – 13
1BV–F174H–70	19 – 13
1BV–F174H–80	19 – 13
5VL–F1778–00	19 – 4
	23 – 20
5VL–F177G–00	19 – 9
5VL–F1780–01	38 – 15
2CD–F2110–00	20 – 1
5VL–F2123–00	20 – 3
5VL–F2127–00	20 – 6
5VL–F2128–01	20 – 4
5VL–F2141–01	20 – 7
5VL–F2151–10	20 – 10
5VL–F2210–01	20 – 14
5VL–F2311–00	20 – 11
5VL–F3102–B1	22 – 1
5VL–F3103–B1	22 – 18

CODIGO Nº PART NO.	REF. Nº
5VL–F3106–30	22 – 2
5VL–F3107–40	22 – 19
5HH–F3110–22	22 – 6
	22 – 23
5VL–F3111–20	22 – 15
	22 – 32
5HH–F3118–10	22 – 13
	22 – 30
5VL–F3141–40	22 – 11
	22 – 28
4GU–F3144–00	22 – 5
	22 – 22
4GU–F3145–00	22 – 3
	22 – 20
5AP–F3147–00	22 – 14
	22 – 31
5AP–F3153–00	22 – 4
	22 – 21
5VL–F3154–00	22 – 16
	22 – 33
5VL–F3165–01	21 – 12
5VL–F3170–01	22 – 7
	22 – 24
4GU–F3173–01	22 – 8
	22 – 25
2B9–F3174–00	21 – 15
4FP–F317J–00	21 – 17
5VL–F331X–01	22 – 35
5VL–F3346–01	22 – 37
5VL–F334G–11	21 – 21
5LK–F3356–01	22 – 10
	22 – 27
5VL–F3389–01	21 – 18
4FP–F3395–10	21 – 20
4FP–F3411–00	21 – 2
4FP–F3411–10	22 – 36
1KL–F3412–00	21 – 1
4FP–F3412–00	21 – 3
4GU–F3416–00	21 – 5
5VL–F3418–01	21 – 7
5VL–F341E–00	21 – 4
5AP–F3427–00	22 – 12
	22 – 29
5VL–F3435–00–33	21 – 9
5VL–F3441–00	21 – 13
4TU–F3479–00	22 – 9
	22 – 26
1BV–F4110–00–GE	23 – 1

CODIGO Nº PART NO.	REF. Nº
1BV–F4110–00–P0	23 – 1
1BV–F4110–00–P1	23 – 1
1BV–F4110–00–P2	23 – 1
1BV–F411B–00	23 – 29
5VL–F414H–00	23 – 25
4FP–F4181–00	23 – 2
5VL–F4182–00	23 – 4
5VL–F4183–00	23 – 3
5VL–F4216–11	23 – 21
1BV–F4244–H0	23 – 26
1BV–F4244–J0	23 – 26
1BV–F4244–K0	23 – 26
1BV–F4244–L0	23 – 26
1BV–F4245–H0	23 – 27
1BV–F4245–J0	23 – 27
1BV–F4245–K0	23 – 27
1BV–F4245–L0	23 – 27
4P2–F4311–00	23 – 12
5VL–F4481–00	24 – 12
5VL–F4500–01	23 – 7
5VL–F4524–01	23 – 8
5VL–F4610–10	38 – 14
1BV–F471K–00–GE	24 – 4
1BV–F471K–00–P0	24 – 4
1BV–F471K–00–P1	24 – 4
1BV–F471K–00–P2	24 – 4
1BV–F472K–00–GE	24 – 5
1BV–F472K–00–P0	24 – 5
1BV–F472K–00–P1	24 – 5
1BV–F472K–00–P2	24 – 5
5VL–F4730–12	24 – 1
4TU–F4741–00	8 – 2
	24 – 2
1BV–F4756–00–GE	24 – 6
1BV–F4756–00–P0	24 – 6
1BV–F4756–00–P1	24 – 6
1BV–F4756–00–P2	24 – 6
5VL–F4773–00	24 – 11
5VL–F4796–01	24 – 14
4GU–F5118–00	25 – 11
4GU–F511X–01	25 – 9
1PX–F5168–00–33	25 – 1
5VL–F5181–11	25 – 7
4GU–F5190–12	25 – 8
5VL–F5321–01–33	27 – 8
1PX–F5338–00–33	27 – 1
4GU–F533A–01	27 – 16
4GU–F5351–02	27 – 12

INDICE NUMERICO
NUMERICAL INDEX

CODIGO Nº PART NO.	REF. Nº
5VL–F5355–01	27 – 13
1KL–F5364–00	27 – 7
5VL–F5366–00	27 – 17
2CD–F5371–00	27 – 27
5VL–F5377–01	27 – 35
5VL–F5381–01	27 – 32
5VL–F5386–01	27 – 34
5VL–F5387–01	27 – 20
5VL–F5388–01	27 – 36
5VL–F53C0–10	27 – 39
5LK–F5412–01	27 – 23
2CD–F5445–00	27 – 21
3D9–F580U–01	26 – 3
3D9–F582U–10	26 – 1
4KL–F5852–00	29 – 4
4KL–F5854–00	29 – 3
3D9–F5865–01	29 – 10
5VL–F5867–00	29 – 9
3D9–F586F–01	29 – 8
3D9–F5872–11	29 – 11
5VL–F5875–01	29 – 16
5VL–F5876–00	29 – 17
5VL–F5886–00	29 – 15
5VL–F5887–00	29 – 14
3D9–F589F–01	29 – 7
4KL–F589H–01	29 – 5
4S5–F5917–00	26 – 12
4S5–F5919–00	26 – 11
4S5–F5921–01	26 – 8
4S5–F5924–01	26 – 13
4S5–F5925–00	26 – 14
4S5–F5937–00	26 – 9
4S5–F5939–00	26 – 10
2CD–F6111–00	28 – 1
2D0–F6240–00	28 – 2
5VL–F6241–00	28 – 3
5VL–F6280–12	28 – 9
5VL–F6290–12	28 – 10
2D0–F6311–01	28 – 4
2D0–F6312–01	28 – 6
5VL–F6335–03	28 – 7
5VL–F6372–01	28 – 8
2CD–F7111–00	30 – 1
5VL–F7112–11	30 – 2
5VL–F7115–01	30 – 3
3D9–F7211–00	30 – 5
2CD–F7231–00	30 – 7
2CD–F7311–00	30 – 21

CODIGO Nº PART NO.	REF. Nº
3S9–F7313–01	30 – 25
2CD–F7411–00	30 – 13
5VL–F7413–00	30 – 17
5VL–F7414–00	30 – 41
2CD–F7430–00	30 – 32
5VL–F7433–00	30 – 33
18C–F743H–00	30 – 14
2CD–F7440–00	30 – 35
5VL–F7444–00	30 – 36
5VL–F7445–01	30 – 34
	30 – 37
2CD–F7452–00	30 – 27
2CD–F7462–00	30 – 28
5VL–F8100–01	17 – 17
5VL–F811G–01	17 – 18
2D0–H1410–01	31 – 2
2D0–H1450–11	31 – 1
4FP–H1801–00	32 – 2
4FP–H1828–01	32 – 5
4FP–H182L–00	32 – 4
5VL–H183G–01	32 – 7
5VL–H1890–00	32 – 1
5VL–H1940–01	38 – 8
5VL–H1960–00	38 – 6
5VL–H1980–10	38 – 20
42D–H2021–00	38 – 12
5VL–H2109–00	30 – 16
3D9–H2110–00	38 – 1
5VL–H2115–00	38 – 4
5VL–H2116–00	38 – 5
5VL–H2131–01	38 – 3
4FP–H2151–00	38 – 9
4P2–H2310–00	39 – 1
4FP–H2370–01	39 – 3
5VL–H2501–02	38 – 13
3S9–H2530–01	38 – 18
5VL–H2540–01	39 – 4
5VL–H2590–43	38 – 19
4FP–H2911–00	37 – 10
5VL–H2917–11	37 – 15
5VL–H3310–21	33 – 1
4FP–H3311–00	33 – 2
	33 – 5
	33 – 9
	33 – 12
5VL–H3320–21	33 – 4
5VL–H3321–00	33 – 7
5VL–H3330–11	33 – 8

CODIGO Nº PART NO.	REF. Nº
5VL–H333A–21	33 – 3
	33 – 6
	33 – 10
	33 – 13
5VL–H3340–11	33 – 11
5VL–H3350–21	39 – 8
5VL–H3359–01	33 – 14
1BK–H3371–00	39 – 9
5VL–H3500–22	34 – 1
5VL–H3509–20	34 – 6
5VL–H350F–00	34 – 4
4FP–H3517–10	34 – 7
4GU–H3517–10	34 – 8
4GU–H3517–20	34 – 11
5VL–H353F–00	34 – 9
5VL–H3540–20	34 – 3
5VL–H3541–00	34 – 10
5VL–H3550–12	34 – 15
5VL–H3559–00	34 – 5
5VL–H3570–10	34 – 2
5VL–H3578–00	34 – 12
5VL–H3912–00	37 – 11
5VL–H3922–21	29 – 6
4TU–H3936–00	37 – 16
5VL–H3936–00	38 – 22
5VL–H3973–01	37 – 4
42D–H3976–00	37 – 7
5VL–H3980–01	37 – 3
5VL–H4145–00	35 – 10
5VL–H4159–10	35 – 7
5VL–H4163–00	35 – 11
5VL–H4164–00	35 – 12
5VL–H4300–23	35 – 1
5VL–H4310–22	35 – 4
5VL–H4312–10	35 – 6
5VL–H4314–20	35 – 2
5VL–H4315–21	35 – 5
5VL–H4330–22	35 – 9
5VL–H4347–10	35 – 3
5VL–H4526–00	35 – 8
5VL–H4714–00	36 – 4
5VL–H4723–00	36 – 2
5VL–H4724–00	36 – 3
5VL–H472C–01	36 – 5
5VL–H4736–00	36 – 7
5VL–H4753–00	36 – 6
5VL–H5110–40	22 – 17
	22 – 34

CODIGO Nº PART NO.	REF. Nº
4FP–H5130–21	39 – 11
5VL–H5540–11	39 – 6
5VL–H5546–00	39 – 7
5VL–H5752–01	38 – 23
4FP–H5753–01	38 – 24
3D9–W0041–02	29 – 2
4S5–W0045–00	26 – 6
4S5–W0047–00	26 – 5
4S5–W0048–01	26 – 7
4S5–W0057–00	26 – 4
2D0–W1140–00	2 – 1
2D0–W1141–00	2 – 2
4P2–W1415–00	7 – 10
4P2–W149A–00	7 – 11
4P2–W149J–00	7 – 3
4P2–W149K–00	7 – 2
5VL–W1510–11	9 – 1
3D9–W2533–00	27 – 9
2B9–W583T–02	29 – 1
5VL–Y1153–00	2 – 7
5VL–Y1161–00	2 – 14
5VL–Y1215–00	3 – 9
4P2–Y1441–01	6 – 5
5VL–Y1635–10	13 – 14
5VL–Y1854–01	15 – 1
5VL–Y8471–21	36 – 1
90101–06848	27 – 14
90101–08820	4 – 9
90101–10816	30 – 23
90105–05832	38 – 25
90105–08724	1 – 13
90105–08873	17 – 12
90105–08874	17 – 4
90105–088E4	17 – 9
90105–088E5	17 – 10
90105–088E6	17 – 13
90105–10831	26 – 15
90109–06850	37 – 12
90109–08847	27 – 28
90109–08848	27 – 29
90109–08864	27 – 22
90111–08805	26 – 2
90119–06811	18 – 10
	19 – 11
90119–06869	6 – 16
	18 – 8
	24 – 3
	30 – 15

CODIGO Nº PART NO.	REF. Nº
90123–08813	37 – 1
90151–06818	15 – 4
90153–06803	1 – 5
90153–08804	27 – 38
90155–06800	5 – 7
90157–02031	34 – 13
90157–03800	23 – 9
90159–06820	23 – 10
90159–06830	20 – 12
90170–12060	13 – 19
90176–10810	20 – 16
90176–22801	21 – 11
90179–06826	30 – 12
90179–08639	27 – 24
90179–08830	17 – 6
	17 – 11
	17 – 14
90179–08862	37 – 2
90179–10807	17 – 5
90179–12813	11 – 12
	13 – 4
90179–12863	2 – 18
90179–25806	21 – 6
90185–10813	30 – 24
90201–05802	21 – 23
90201–05803	8 – 6
90201–05804	8 – 7
90201–06850	19 – 8
	24 – 9
90201–068C2	38 – 11
	38 – 17
90201–07641	5 – 4
90201–08326	4 – 8
90201–08830	35 – 14
90201–08840	17 – 15
	30 – 19
90201–088C3	1 – 14
90201–088P2	23 – 5
90201–10831	30 – 26
90201–108C7	20 – 15
90201–108J9	29 – 13
90201–122H1	2 – 17
	13 – 3
90201–12819	20 – 9
90201–152H7	11 – 8
90201–15700	14 – 20
90201–20266	14 – 6
	14 – 16

CODIGO Nº PART NO.	REF. Nº
90201–20272	14 – 22
90201–208D5	11 – 4
90201–228F6	19 – 6
90201–258D7	12 – 6
90202–09800	23 – 24
90202–26142	21 – 8
90208–07052	5 – 5
90215–12211	13 – 18
90249–06800	30 – 38
90249–12808	30 – 11
90267–32845	17 – 16
90267–48854	18 – 3
90280–03017	2 – 16
90282–05001	13 – 2
90340–12097	5 – 8
90340–14810	10 – 6
90340–32812	10 – 8
90386–18801	20 – 2
90387–06837	36 – 9
90387–06879	23 – 23
90387–15809	27 – 2
90387–158K1	25 – 10
90387–167L5	4 – 4
90401–10811	29 – 12
90430–05800	23 – 11
90430–06817	1 – 6
	4 – 18
90430–10819	39 – 5
90430–12227	5 – 9
90445–08830	38 – 2
90450–44804	6 – 4
90450–51802	6 – 17
90462–16801	9 – 6
90464–12803	18 – 11
90464–35820	38 – 21
90467–09854	23 – 13
90467–12828	9 – 5
90468–26813	11 – 3
90480–01868	24 – 10
90480–13837	19 – 3
	23 – 19
90480–14812	36 – 8
90480–24186	19 – 5
90501–10806	30 – 10
90506–12801	27 – 10
90506–15802	27 – 11
90506–29800	30 – 22
90506–32800	30 – 4

INDICE NUMERICO
NUMERICAL INDEX

CODIGO Nº PART NO.	REF. Nº
90508–16800	13 – 23
90508–26836	11 – 5
90508–32801	16 – 5
90508–40801	30 – 6
90560–15293	25 – 2
91312–05010	14 – 28
91312–06012	4 – 6
91312–06014	31 – 4
91312–06020	8 – 13
	38 – 16
91312–06025	6 – 3
	31 – 3
91312–06090	1 – 18
91312–08016	12 – 8
91402–20012	27 – 31
	30 – 8
92902–06200	13 – 15
	30 – 9
	30 – 39
92902–08200	30 – 31
92990–06200	8 – 11
93101–10800	10 – 21
93101–12812	16 – 4
93102–12802	13 – 24
93102–20854	14 – 24
93102–20857	25 – 4
93104–22802	27 – 5
93106–26804	27 – 19
93109–18802	20 – 5
93109–20806	11 – 13
93210–11800	2 – 9
93210–14899	10 – 7
93210–19809	10 – 20
93210–30611	6 – 2
93210–328A4	10 – 9
93210–42807	27 – 6
93210–44889	1 – 12
93210–55669	32 – 3
93210–57897	1 – 21
93210–71801	1 – 9
93306–002YU	4 – 3
93306–003X6	4 – 2
93306–004YL	27 – 18
93306–201Y8	14 – 8
93306–202XN	2 – 15
93306–202XP	14 – 25
93306–202Y4	25 – 3
	27 – 3

CODIGO Nº PART NO.	REF. Nº
93306–203YT	14 – 9
93306–204YD	14 – 23
93306–205XJ	2 – 10
93306–252X5	27 – 4
93310–629Y3	2 – 4
93410–20809	14 – 7
	14 – 17
93440–10109	1 – 4
93450–16812	2 – 13
93503–16824	13 – 20
93604–10837	15 – 3
93608–30839	16 – 8
93822–14813	14 – 26
94109–18809	27 – 25
94127–18830	25 – 5
94227–18810	25 – 6
	27 – 26
94568–C1088	4 – 10
94668–E2001	27 – 40
94700–00869	1 – 15
95022–06016	4 – 17
	29 – 18
	34 – 14
	39 – 2
95022–06020	1 – 10
95022–06025	29 – 19
	32 – 8
95022–06030	9 – 7
95022–06035	10 – 4
	10 – 17
95022–06045	9 – 8
	10 – 18
95022–06050	10 – 5
95022–06055	9 – 9
95022–08035	21 – 14
95022–08040	21 – 10
95023–08030	35 – 13
95302–06600	13 – 16
	27 – 15
	36 – 10
	38 – 10
95302–08800	35 – 15
95312–08600	27 – 37
95602–06100	37 – 13
95602–12200	20 – 8
95602–14200	25 – 12
	27 – 33
95702–05500	39 – 12

CODIGO Nº PART NO.	REF. Nº
95702–08500	27 – 30
95702–10500	33 – 15
95802–06020	4 – 14
	38 – 7
95812–08016	24 – 13
95812–08020	8 – 14
	30 – 18
	30 – 29
95812–08025	30 – 20
	30 – 30
95812–10080	17 – 3
95822–06012	21 – 19
	39 – 10
95822–06016	18 – 4
	21 – 16
97002–05012	21 – 22
97002–06016	24 – 8
97002–08016	23 – 6
97022–06020	16 – 11
97590–06522	37 – 14
97602–06220	6 – 13
97702–40014	23 – 18
97702–50012	24 – 7
97801–04010	7 – 13
98502–05010	28 – 5
98507–05025	37 – 6
98507–05030	37 – 8
98507–05043	37 – 5
98507–05050	37 – 9
98512–06010	10 – 11
98512–06012	12 – 4
	14 – 11
98512–06016	23 – 22
98902–05008	32 – 6
98902–06016	10 – 13
98902–06020	19 – 7
98980–06012	8 – 5
98980–06014	8 – 8
	8 – 10
99002–05600	5 – 3
	30 – 40
99002–10600	16 – 6
99009–15400	11 – 9
	14 – 21
99009–20500	13 – 25
99234–00080	23 – 30
	24 – 15
99236–00080	23 – 30

CODIGO Nº PART NO.	REF. Nº
99236–00080	24 – 15
99530–10114	1 – 17
	9 – 2
	9 – 10
	10 – 3
	10 – 16