FUSINGX

# General Catalog

Electrofusion fittings
Butt fusion fittings

2025

# INTRODUCTION

## Company Introduction

Fusing X is a company that integrates the production, research and development, and sales of high-density polyethylene (HDPE) fittings, established in 2005. After more than a decade of development, the company now boasts a 20,000 m² workshop and 150 employees. FusingX exports to over 20 countries and serves more than 100 major clients.

The company has the capability to produce a full range of butt fusion fittings, electrofusion fittings, PE threaded fittings, siphon drainage fittings, PP-R pipes, engineering pipeline systems, home decoration pipeline systems, industrial hot water pipeline systems fittings and pipes, as well as providing customized fittings services.

Fusing X adheres to the belief in sustainable human development by using the best new PE materials, automated production equipment, and scientific production techniques to continuously improve productivity, reliability, and eco-friendliness. The company has passed ISO9001 and GB/T13663.2-2018 certifications. By closely connecting its produced fittings with industries such as human energy transportation, construction, and environmental protection, Fusing X provides safe and reliable guarantees.

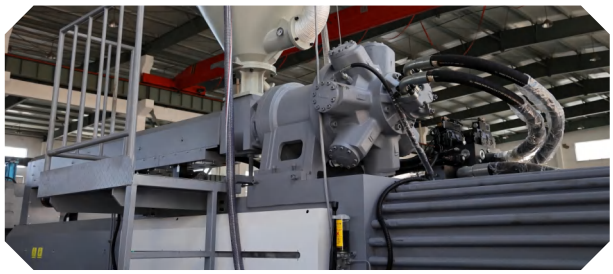

## Production

### INJECTION

Regular checkups to make sure the injection parameters

### WIRE COILING

Automatic CNC wire coiling ensures uniform fitting for the fusion zone

### PIN CONNECTING

After pin connection, resistance will be checked 100% to ensure quality

## Quality Control

### HYDROSTATIC PRESSURE

Follow ISO1167 for 20℃ 100 hours and 80℃ 165 hours pressure test

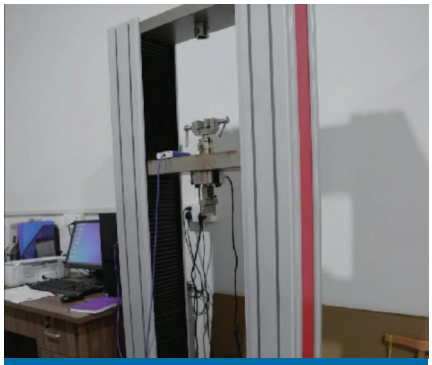

### TENSILE TEST

Conduct tensile tests per ISO13954/13955 to avoid brittle failure

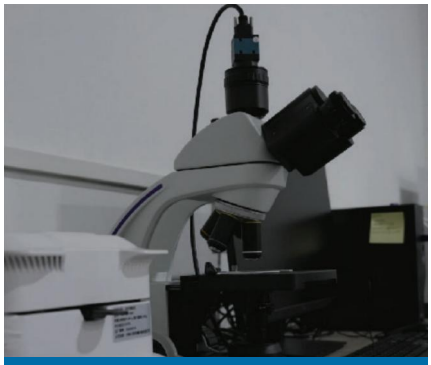

### MFR, OIT, DENSITY

Perform chemical tests such as MFR, OIT, density,moisture, and volatile content according to relevant ISO standards

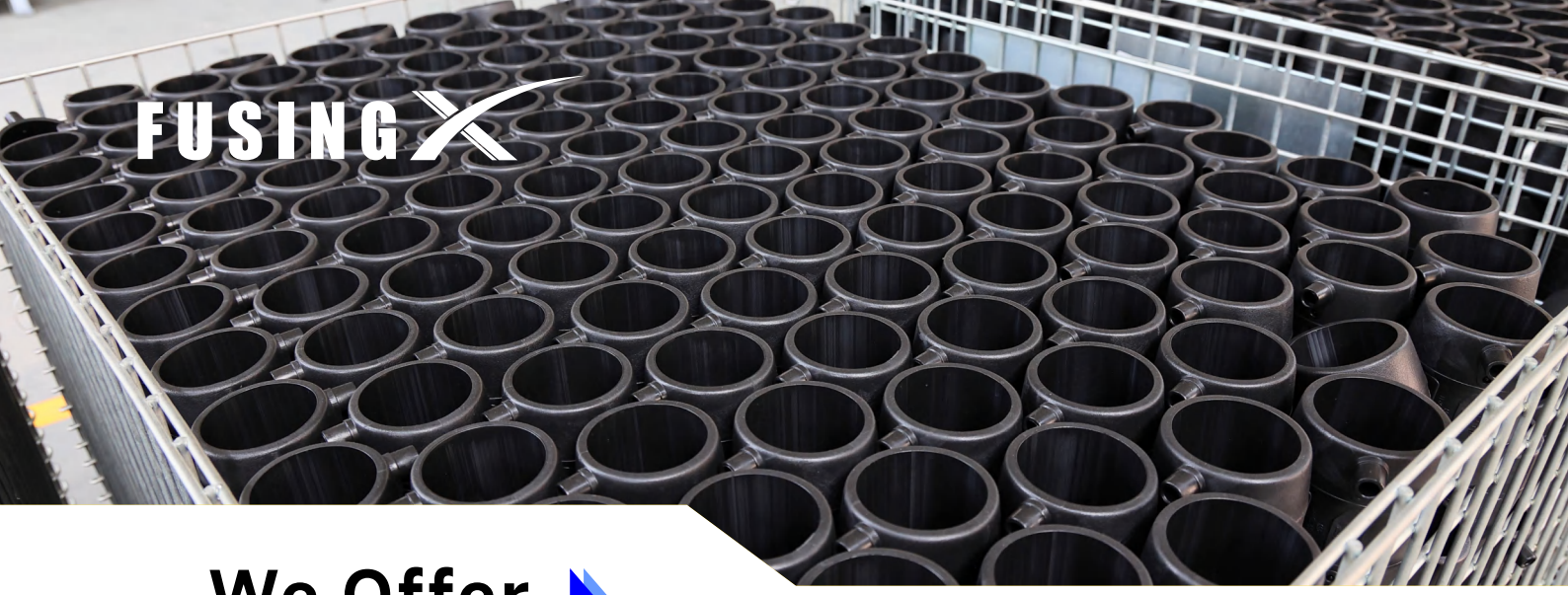

FUSINGX

# We Offer

**Electrofusion Fittings**
1.0Mpa, SDR17, PN10
1.6Mpa, SDR11, PN16
2.0Mpa, SDR9, PN20
**S series**
1-17

**Electrofusion Fittings**
1.6Mpa, SDR11, PN16
**X series**
18-22

**Butt Fusion Fittings**
1.6Mpa, SDR11, PN16
**S series**
23-34

Coupler

| SDR-17 | | | | | |
|---|---|---|---|---|---|
| DN | D | T | L | L1 | L2 |
| 315 | 355 | 20 | 234 | 117 | 66 |
| 355 | 399 | 22 | 267 | 133 | 70 |
| 400-B | 452 | 26 | 240 | 115 | 60 |
| 400 | 448 | 24 | 300 | 150 | 75 |
| 450 | 504 | 27 | 310 | 155 | 75 |
| 500-B | 563 | 31 | 260 | 127 | 73 |
| 500 | 556 | 28 | 325 | 162 | 85 |
| 560 | 616 | 28 | 334 | 167 | 100 |
| 630-B | 706 | 38 | 332 | 166 | 110 |
| 630 | 696 | 33 | 376 | 188 | 110 |
| 710-B | 788 | 39 | 350 | 173 | 110 |
| 710 | 796 | 43 | 429 | 207 | 112 |
| 800-B | 888 | 44 | 361 | 176 | 111 |
| 800 | 898 | 49 | 455 | 222 | 122 |
| 901 | 1005 | 53 | 528 | 258 | 128 |
| 1000 | 1117 | 58 | 590 | 285 | 160 |
| 1200 | 1342 | 70 | 595 | 290 | 160 |
| 1400 | 1567 | 82 | 567 | 285 | 164 |

Elbow 90°

| SDR-17 | | | | |
|---|---|---|---|---|
| DN | D | T | L | L1 |
| 315 | 355 | 20 | 135 | 66 |
| 355 | 403 | 24 | 140 | 70 |
| 400 | 456 | 28 | 145 | 75 |
| 500 | 560 | 30 | 150 | 85 |
| 630 | 704 | 37 | 185 | 110 |
| 710 | 795 | 42 | 211 | 112 |
| 800 | 890 | 45 | 225 | 120 |

Elbow 45°

| SDR-17 | | | | |
|---|---|---|---|---|
| DN | D | T | L | L1 |
| 315 | 355 | 20 | 135 | 66 |
| 355 | 403 | 24 | 140 | 70 |
| 400 | 456 | 28 | 145 | 75 |
| 500 | 560 | 30 | 150 | 85 |
| 630 | 704 | 37 | 185 | 110 |
| 710 | 792 | 41 | 211 | 112 |
| 800 | 886 | 43 | 225 | 120 |

Reducer

| SDR-17 | | | | | | |
|---|---|---|---|---|---|---|
| DN | Dn2/Dn1 | Dn2/Dn1 | T2/T1 | L | L2/L1 | L4/L3 |
| 355*200 | 200/355 | 240/399 | 20/22 | 277 | 105/140 | 55/65 |
| 355*250 | 250/355 | 294/399 | 22/22 | 297 | 125/140 | 70/70 |
| 355*315 | 315/355 | 363/399 | 24/22 | 285 | 135/140 | 65/70 |
| 400*250 | 250/400 | 294/448 | 22/24 | 310 | 125/140 | 80/75 |
| 400*315 | 315/400 | 365/448 | 25/24 | 315 | 135/140 | 80/75 |
| 500*315 | 315/500 | 365/556 | 25/28 | 320 | 133/140 | 78/83 |
| 500*400 | 400/500 | 450/556 | 25/28 | 330 | 145/150 | 73/81 |
| 710*500 | 440/710 | 500/796 | 30/43 | 460 | 157/270 | 115/115 |
| 710*630 | 556/710 | 630/796 | 37/43 | 465 | 184/250 | 115/115 |
| 800*630 | 556/800 | 630/898 | 37/49 | 500 | 184/280 | 120/120 |
| 800*710 | 626/800 | 710/898 | 42/49 | 505 | 215/285 | 120/120 |

Equal Tee

| SDR-17 | | | | | |
|---|---|---|---|---|---|
| Dn | D | T | L | L1 | L2 |
| 315 | 355 | 20 | 518 | 135 | 66 |
| 355 | 405 | 25 | 585 | 140 | 75 |
| 400 | 454 | 27 | 620 | 143 | 75 |
| 500 | 560 | 30 | 737 | 150 | 85 |
| 630 | 704 | 37 | 932 | 187 | 110 |
| 710 | 788 | 39 | 996 | 210 | 125 |
| 800 | 888 | 44 | 1120 | 225 | 130 |

Flange Adapter

| SDR-17 | | | | | | |
|---|---|---|---|---|---|---|
| Dn | D | T | T1 | L | L1 | L2 |
| 355 | 395 | 20 | 36.5 | 150 | 132 | 80 |
| 400 | 444 | 22 | 37 | 150 | 135 | 76 |
| 450 | 498 | 24 | 43 | 155 | 140 | 77 |
| 500 | 552 | 26 | 43 | 190 | 170 | 105 |
| 560 | 620 | 30 | 48 | 205 | 180 | 95 |
| 630 | 680 | 25 | 60 | 205 | 190 | 115 |
| 710 | 772 | 31 | 71 | 270 | 245 | 150 |
| 800 | 872 | 36 | 75 | 273 | 250 | 158 |
| 900 | 995 | 47 | 78 | 300 | 285 | 180 |
| 1000 | 1105 | 51 | 88 | 342 | 325 | 138 |

Reducing Tee

| SDR-17 | | | | | |
|---|---|---|---|---|---|
| Dn | D | T | L | L1 | L2 |
| 315*90 | 355 | 20 | 398 | 135 | 66 |
| 315*110 | 355 | 20 | 398 | 135 | 66 |
| 315*160 | 355 | 20 | 398 | 135 | 66 |
| 315*200 | 355 | 20 | 518 | 135 | 66 |
| 315*250 | 355 | 20 | 518 | 135 | 66 |
| 355*110 | 405 | 25 | 585 | 140 | 75 |
| 355*160 | 405 | 25 | 585 | 140 | 75 |
| 355*200 | 405 | 25 | 585 | 140 | 75 |
| 355*250 | 405 | 25 | 585 | 140 | 75 |
| 355*315 | 405 | 25 | 585 | 140 | 75 |
| 400*110 | 454 | 27 | 447 | 143 | 75 |
| 400*125 | 454 | 27 | 447 | 143 | 75 |
| 400*160 | 454 | 27 | 447 | 143 | 75 |
| 400*200 | 454 | 27 | 447 | 143 | 75 |
| 400*250 | 454 | 27 | 620 | 143 | 75 |
| 400*315 | 454 | 27 | 620 | 143 | 75 |
| 500*110 | 560 | 30 | 500 | 150 | 85 |
| 500*160 | 560 | 30 | 500 | 150 | 85 |
| 500*200 | 560 | 30 | 500 | 150 | 85 |
| 500*250 | 560 | 30 | 500 | 150 | 85 |
| 500*315 | 560 | 30 | 737 | 150 | 85 |
| 500*400 | 560 | 30 | 737 | 150 | 85 |
| 500*450 | 560 | 30 | 737 | 150 | 85 |
| 630*110 | 702 | 36 | 710 | 184 | 110 |
| 630*160 | 702 | 36 | 710 | 184 | 110 |
| 630*200 | 702 | 36 | 710 | 184 | 110 |
| 630*250 | 702 | 36 | 710 | 184 | 110 |
| 630*315 | 702 | 36 | 710 | 184 | 110 |
| 630*400 | 702 | 36 | 710 | 184 | 110 |
| 630*500 | 704 | 37 | 932 | 187 | 110 |
| 710*200 | 792 | 41 | 792 | 214 | 112 |
| 710*315 | 792 | 41 | 792 | 214 | 112 |
| 710*400 | 792 | 41 | 792 | 214 | 112 |
| 710*500 | 792 | 41 | 792 | 214 | 112 |
| 800*160 | 890 | 45 | 816 | 227 | 120 |
| 800*200 | 890 | 45 | 816 | 227 | 120 |
| 800*315 | 890 | 45 | 816 | 227 | 120 |
| 800*400 | 890 | 45 | 816 | 227 | 120 |
| 800*500 | 890 | 45 | 816 | 227 | 12 |
| 900*710 | 1005 | 53 | 1092 | 260 | 140 |
| 1000*710 | 1117 | 58 | 1150 | 288 | 145 |

Coupler

| SDR-11 | | | | | |
|---|---|---|---|---|---|
| Dn | D | T | L | L1 | L2 |
| 50 | 66 | 8 | 113 | 56 | 30 |
| 63 | 79 | 8 | 112 | 56 | 30 |
| 75 | 93 | 9 | 124 | 62 | 32 |
| 90 | 110 | 10 | 139 | 69 | 40 |
| 110 | 136 | 13 | 148 | 74 | 40 |
| 125 | 151 | 13 | 158 | 79 | 40 |
| 140 | 168 | 14 | 168 | 84 | 40 |
| 160 | 192 | 16 | 173 | 86 | 50 |
| 180 | 214 | 17 | 191 | 94 | 47 |
| 200 | 236 | 18 | 192 | 96 | 53 |
| 225 | 267 | 21 | 218 | 109 | 55 |
| 250 | 292 | 21 | 220 | 110 | 63 |
| 280 | 322 | 21 | 215 | 107 | 70 |
| 315 | 371 | 28 | 265 | 132 | 65 |
| 315-B | 371 | 28 | 235 | 113 | 60 |
| 355 | 419 | 32 | 267 | 133 | 70 |
| 400-B | 476 | 39 | 240 | 113 | 60 |
| 400 | 468 | 34 | 300 | 147 | 75 |
| 450 | 534 | 42 | 310 | 155 | 75 |
| 500-B | 592 | 46 | 260 | 124 | 73 |
| 500 | 572 | 36 | 325 | 160 | 85 |
| 560 | 651 | 47 | 333 | 170 | 100 |
| 630 | 731 | 50.5 | 375 | 188 | 110 |
| 710 | 832 | 61 | 432 | 209 | 112 |
| 800 | 936 | 68 | 456 | 224 | 126 |
| 900 | 1064 | 82 | 528 | 258 | 128 |
| 1000 | 1178 | 89 | 590 | 289 | 165 |
| 1200 | 1218 | 109 | 595 | 290 | 160 |

Elbow 90°

| SDR-11 | | | | |
|---|---|---|---|---|
| Dn | D | T | L | L1 |
| 50 | 66 | 8 | 54 | 25 |
| 63 | 79 | 8 | 54 | 25 |
| 75 | 91 | 8 | 60 | 30 |
| 90 | 110 | 10 | 68 | 40 |
| 110 | 132 | 11 | 74 | 40 |
| 125 | 151 | 13 | 80 | 40 |
| 140 | 166 | 13 | 75 | 35 |
| 160 | 190 | 15 | 95 | 50 |
| 200 | 238 | 19 | 105 | 55 |
| 225 | 267 | 21 | 110 | 65 |
| 250 | 294 | 22 | 125 | 63 |
| 315 | 375 | 30 | 135 | 70 |
| 355 | 419 | 32 | 140 | 70 |
| 400 | 472 | 36 | 145 | 75 |
| 500 | 587 | 43.5 | 151 | 85 |
| 630 | 735 | 55 | 185 | 110 |

Reducer

| SDR-11 | | | | | |
|---|---|---|---|---|---|
| Dn2/Dn1 | D2/D1 | T2/T1 | L | L2/L1 | L4/L3 |
| 50/63 | 66 /79 | 8 /8 | 114 | 53 /53 | 23 /26 |
| 50/75 | 66 /91 | 8 /8 | 121 | 53 /57 | 26 /31 |
| 63/75 | 79 /91 | 8 /8 | 122 | 54 /57 | 27 /31 |
| 50/90 | 66 /110 | 8 /10 | 133 | 55 /65 | 30 /26 |
| 63/90 | 79 /110 | 8 /10 | 135 | 55 /65 | 26 /26 |
| 75/90 | 93 /110 | 9 /10 | 136 | 60 /67 | 33 /45 |
| 50/110 | 66 /134 | 8 /12 | 145 | 55 /72 | 37 /43 |
| 63/110 | 79 /134 | 8 /12 | 142 | 55 /73 | 31 /45 |
| 75/110 | 91 /134 | 8 /12 | 145 | 60 /73 | 38 /44 |
| 90/110 | 110 /134 | 10 /12 | 153 | 70 /73 | 38 /44 |
| 75/125 | 91 /149 | 8 /12 | 155 | 60 /79 | 38 /38 |
| 90/125 | 110 /149 | 10 /12 | 166 | 70 /77 | 38 /40 |
| 110/125 | 132 /149 | 11 /12 | 170 | 75 /78 | 38 /33 |
| 110/140 | 132 /168 | 11 /14 | 175 | 75 /80 | 40 /40 |
| 50/160 | 90 /194 | 20 /17 | 235 | 100 /110 | 72 /46 |
| 63/160 | 91 /192 | 14 /16 | 235 | 100 /110 | 70 /45 |
| 75/160 | 109 /192 | 17 /16 | 184 | 70 /92 | 43 /47 |
| 90/160 | 110 /194 | 10 /17 | 183 | 68 /92 | 36 /41 |
| 110/160 | 134 /192 | 12 /16 | 186 | 75 /92 | 50 /50 |
| 125/160 | 149 /192 | 12 /16 | 190 | 80 /90 | 50 /50 |
| 140/160 | 164 /192 | 12 /16 | 194 | 90 /95 | 50 /50 |
| 50/200 | 78 /236 | 14 /18 | 255 | 109 /113 | 81 /43 |
| 63/200 | 79 /236 | 8 /18 | 265 | 109 /113 | 90 /50 |
| 75/200 | 109 /238 | 17 /19 | 260 | 109 /117 | 83 /51 |
| 90/200 | 110 /236 | 10 /18 | 260 | 109 /112 | 50 /60 |
| 110/200 | 134 /236 | 12 /18 | 210 | 75 /100 | 50 /60 |
| 125/200 | 149 /236 | 12 /18 | 215 | 80 /100 | 50 /60 |
| 140/200 | 168 /240 | 14 /20 | 215 | 95 /90 | 47 /60 |
| 160/200 | 192 /238 | 16 /19 | 222 | 93 /102 | 52 /65 |
| 110/225 | 134 /265 | 12 /20 | 223 | 75 /110 | 40 /45 |
| 160 /225 | 190 /265 | 15 /20 | 232 | 95 /110 | 55 /57 |
| 200 /225 | 236 /265 | 18 /20 | 232 | 103 /110 | 55 /60 |
| 110 /250 | 134 /294 | 12 /22 | 250 | 75 /120 | 45 /55 |
| 160 /250 | 192 /294 | 16 /22 | 264 | 95 /120 | 50 /65 |
| 200 /250 | 236 /294 | 18 /22 | 264 | 105 /120 | 50 /60 |
| 225 /250 | 265 /294 | 20 /22 | 252 | 110 /120 | 50 /60 |
| 160 /315 | 192 /363 | 16 /24 | 268 | 95 /130 | 55 /60 |
| 200 /315 | 236 /363 | 18 /24 | 275 | 105 /130 | 55 /60 |
| 250 /315 | 292 /363 | 21 /24 | 290 | 125 /130 | 55 /60 |
| 200 /355 | 240 /415 | 20 /30 | 272 | 105 /135 | 63 /68 |
| 250 /355 | 296 /415 | 23 /30 | 295 | 123 /135 | 65 /70 |
| 315 /355 | 375 /417 | 30 /31 | 285 | 132 /135 | 70 /70 |
| 315 /400 | 373 /468 | 29 /34 | 307 | 132 /140 | 72 /80 |
| 355 /400 | 417 /470 | 31 /35 | 311 | 150 /140 | 71 /80 |
| 400 /450 | 470 /522 | 35 /36 | 315 | 143 /155 | 95 /90 |
| 400 /500 | 473 /567 | 35 /35 | 330 | 145 /125 | 80 /90 |
| 400 /630 | 478 /731 | 39 /51 | 390 | 160 /193 | 124 /105 |
| 500 /630 | 583 /728 | 39 /51 | 391 | 165 /193 | 110 /91 |

Equal Tee

| SDR-11 | | | | | |
|---|---|---|---|---|---|
| Dn | D | T | L | L1 | L2 |
| 50 | 66 | 8 | 149 | 54 | 27 |
| 63 | 79 | 8 | 165 | 55 | 28 |
| 75 | 93 | 9 | 184 | 60 | 29 |
| 90 | 110 | 10 | 213 | 70 | 40 |
| 110 | 134 | 12 | 241 | 75 | 40 |
| 125 | 151 | 13 | 260 | 80 | 40 |
| 140 | 168 | 14 | 281 | 85 | 40 |
| 160 | 192 | 16 | 315 | 93 | 50 |
| 200 | 240 | 20 | 360 | 104 | 55 |
| 225 | 265 | 20 | 395 | 120 | 55 |
| 250 | 296 | 23 | 437 | 125 | 63 |
| 315 | 371 | 28 | 518 | 133 | 70 |
| 355 | 419 | 32 | 577 | 140 | 70 |
| 400 | 474 | 37 | 623 | 143 | 70 |
| 450 | 525 | 37.5 | 703 | 156 | 75 |
| 500 | 587 | 43.5 | 725 | 151 | 85 |
| 560 | 640 | 43 | 803 | 168 | 100 |

Elbow 45°

| SDR-11 | | | | |
|---|---|---|---|---|
| Dn | D | T | L | L1 |
| 50 | 66 | 8 | 54 | 25 |
| 63 | 79 | 8 | 54 | 25 |
| 75 | 91 | 8 | 60 | 30 |
| 90 | 110 | 10 | 68 | 40 |
| 110 | 132 | 11 | 74 | 40 |
| 125 | 151 | 13 | 80 | 40 |
| 140 | 166 | 13 | 75 | 35 |
| 160 | 190 | 15 | 95 | 50 |
| 200 | 238 | 19 | 105 | 55 |
| 225 | 267 | 21 | 110 | 65 |
| 250 | 294 | 22 | 125 | 63 |
| 315 | 375 | 30 | 135 | 70 |
| 355 | 419 | 32 | 140 | 70 |
| 400 | 472 | 36 | 145 | 75 |
| 500 | 587 | 43.5 | 151 | 85 |
| 630 | 735 | 55 | 185 | 110 |

End Cap

| SDR-11 | | | | | |
|---|---|---|---|---|---|
| Dn | D | T | L | L1 | L2 |
| 50 | 64 | 7 | 80 | 58 | 35 |
| 63 | 79 | 8 | 82 | 65 | 33 |
| 75 | 95 | 10 | 100 | 68 | 45 |
| 90 | 110 | 10 | 95 | 75 | 40 |
| 110 | 134 | 12 | 103 | 78 | 40 |
| 160 | 190 | 15 | 145 | 110 | 75 |
| 200 | 236 | 18 | 165 | 123 | 80 |
| 250 | 290 | 20 | 165 | 123 | 75 |
| 315 | 370 | 28 | 190 | 152 | 95 |
| 400 | 470 | 35 | 205 | 160 | 78 |

Reducing Tee

| SDR-11 | | | | | |
|---|---|---|---|---|---|
| Dn | D | T | L | L1 | L2 |
| 50*32 | 66 | 8 | 149 | 54 | 27 |
| 50*40 | 66 | 8 | 149 | 54 | 27 |
| 63*32 | 79 | 8 | 165 | 55 | 28 |
| 63*40 | 79 | 8 | 165 | 55 | 28 |
| 63*50 | 79 | 8 | 165 | 55 | 28 |
| 75*40 | 93 | 9 | 184 | 60 | 29 |
| 75*50 | 93 | 9 | 184 | 60 | 29 |
| 75*63 | 93 | 9 | 184 | 60 | 29 |
| 90*50 | 110 | 10 | 213 | 70 | 40 |
| 90*63 | 110 | 10 | 213 | 70 | 40 |
| 90*75 | 110 | 10 | 213 | 70 | 40 |
| 110*50 | 134 | 12 | 214 | 75 | 40 |
| 110*63 | 134 | 12 | 214 | 75 | 40 |
| 110*75 | 134 | 12 | 214 | 75 | 40 |
| 110*90 | 134 | 12 | 241 | 75 | 40 |
| 125*75 | 151 | 13 | 260 | 80 | 40 |
| 125*90 | 151 | 13 | 260 | 80 | 40 |
| 125*110 | 151 | 13 | 260 | 80 | 40 |
| 140*90 | 168 | 14 | 281 | 85 | 40 |
| 140*110 | 168 | 14 | 281 | 85 | 40 |
| 160*50 | 192 | 16 | 263 | 93 | 50 |
| 160*63 | 192 | 16 | 263 | 93 | 50 |
| 160*75 | 192 | 16 | 263 | 93 | 50 |
| 160*90 | 192 | 16 | 315 | 93 | 50 |
| 160*110 | 192 | 16 | 315 | 93 | 50 |
| 160*125 | 192 | 16 | 315 | 93 | 50 |
| 160*140 | 192 | 16 | 315 | 93 | 50 |
| 200*50 | 240 | 20 | 295 | 104 | 55 |
| 200*63 | 240 | 20 | 295 | 104 | 55 |
| 200*75 | 240 | 20 | 295 | 104 | 55 |
| 200*90 | 240 | 20 | 295 | 104 | 55 |
| 200*110 | 240 | 20 | 295 | 104 | 55 |
| 200*125 | 240 | 20 | 360 | 104 | 55 |
| 200*160 | 240 | 20 | 360 | 104 | 55 |
| 225*90 | 265 | 20 | 395 | 120 | 55 |
| 225*110 | 265 | 20 | 395 | 120 | 55 |
| 225*160 | 265 | 20 | 395 | 120 | 55 |
| 225*200 | 265 | 20 | 395 | 120 | 55 |
| 250*75 | 296 | 23 | 354 | 125 | 63 |
| 250*90 | 296 | 23 | 354 | 125 | 63 |
| 250*110 | 296 | 23 | 354 | 125 | 63 |
| 250*125 | 296 | 23 | 354 | 125 | 63 |
| 250*160 | 296 | 23 | 437 | 125 | 63 |
| 250*200 | 296 | 23 | 437 | 125 | 63 |
| 315*110 | 371 | 28 | 398 | 133 | 70 |
| 315*160 | 371 | 28 | 398 | 133 | 70 |
| 315*200 | 371 | 28 | 518 | 133 | 70 |
| 315*250 | 371 | 28 | 518 | 133 | 70 |
| 355*250 | 419 | 32 | 577 | 140 | 70 |
| 355*315 | 419 | 32 | 577 | 140 | 70 |

Reducing Tee

| SDR-11 | | | | | |
|---|---|---|---|---|---|
| Dn | D | T | L | L1 | L2 |
| 400*110 | 472 | 36 | 338 | 143 | 70 |
| 400*160 | 472 | 36 | 338 | 143 | 70 |
| 400*200 | 472 | 36 | 338 | 143 | 70 |
| 400*250 | 472 | 36 | 623 | 143 | 70 |
| 400*315 | 472 | 36 | 623 | 143 | 70 |
| 450*110 | 525 | 37.5 | 703 | 156 | 75 |
| 450*160 | 525 | 37.5 | 703 | 156 | 75 |
| 450*200 | 525 | 37.5 | 703 | 156 | 75 |
| 450*250 | 525 | 37.5 | 703 | 156 | 75 |
| 450*315 | 525 | 37.5 | 703 | 156 | 75 |
| 450*400 | 525 | 37.5 | 703 | 156 | 75 |
| 500*400 | 587 | 43.5 | 725 | 151 | 85 |
| 560*110 | 640 | 43 | 803 | 168 | 100 |
| 560*160 | 640 | 43 | 803 | 168 | 100 |
| 560*200 | 640 | 43 | 803 | 168 | 100 |
| 560*250 | 640 | 43 | 803 | 168 | 100 |
| 560*315 | 640 | 43 | 803 | 168 | 100 |
| 560*400 | 640 | 43 | 803 | 168 | 100 |
| 630*110 | 742 | 56 | 705 | 185 | 110 |
| 630*160 | 742 | 56 | 705 | 185 | 110 |
| 630*200 | 742 | 56 | 705 | 185 | 110 |
| 630*250 | 742 | 56 | 705 | 185 | 110 |
| 630*315 | 742 | 56 | 705 | 185 | 110 |
| 630*400 | 742 | 56 | 705 | 185 | 110 |

Flange Adapter

| SDR-11 | | | | | | |
|---|---|---|---|---|---|---|
| Dn | D | T | T1 | L | L1 | L2 |
| 50 | 66 | 8 | 19 | 78 | 71 | 37 |
| 63 | 79 | 8 | 21 | 77 | 71 | 38 |
| 75 | 93 | 9 | 20 | 77 | 70 | 40 |
| 90 | 110 | 10 | 22.5 | 85 | 77 | 45 |
| 110 | 132 | 11 | 26 | 104 | 95 | 55 |
| 125 | 149 | 12 | 26 | 105 | 95 | 57 |
| 140 | 168 | 14 | 24 | 107 | 94 | 56 |
| 160 | 190 | 15 | 28.5 | 125 | 113 | 65 |
| 200 | 238 | 19 | 31 | 123 | 110 | 60 |
| 225(8) | 265 | 20 | 33 | 122 | 109 | 61 |
| 225(12) | 265 | 20 | 33 | 122 | 109 | 61 |
| 250 | 290 | 20 | 36 | 150 | 140 | 80 |
| 280 | 320 | 20 | 37 | 150 | 145 | 90 |
| 315 | 355 | 20 | 39.5 | 155 | 145 | 95 |
| 355 | 405 | 25 | 41 | 155 | 135 | 80 |
| 400 | 456 | 28 | 41 | 155 | 133 | 76 |
| 450 | 498 | 24 | 45 | 155 | 140 | 77 |
| 500 | 552 | 26 | 56 | 190 | 170 | 105 |
| 560 | 620 | 30 | 65 | 205 | 180 | 95 |
| 630 | 680 | 25 | 60 | 205 | 190 | 115 |

**Coupler**

B type

| SDR-11 | | | | | |
|---|---|---|---|---|---|
| Dn | D | T | L | L1 | L2 |
| 50 | 62.5 | 6.5 | 94 | 45 | 22.1 |
| 63 | 77 | 7.5 | 105.5 | 53 | 22.1 |
| 75 | 92 | 8.6 | 112 | 54 | 22.1 |
| 90 | 108 | 10 | 121.5 | 60 | 30 |
| 110 | 132.5 | 11.3 | 141 | 70 | 37.5 |
| 160 | 189 | 14.6 | 162 | 77 | 37.5 |
| 200 | 235.5 | 18.1 | 184 | 90 | 45 |
| 250(10Kg) | 286 | 18 | 193.5 | 96 | 45 |
| 250(16Kg) | 295.5 | 22.7 | 205 | 101.5 | 54 |
| 315(10Kg) | 353 | 20 | 220 | 108.5 | 45 |
| 315(16Kg) | 394 | 29.2 | 236 | 116 | 51 |

**Elbow 90°**

B type

| SDR-11 | | | | |
|---|---|---|---|---|
| Dn | D | T | L | L1 |
| 110 | 134 | 12 | 66.5 | 35 |
| 160 | 189 | 15.5 | 77 | 37.5 |
| 200 | 235.5 | 18.5 | 90 | 45 |

**Flange Adapter**

B type

| SDR-11 | | | | | | |
|---|---|---|---|---|---|---|
| Dn | D | T | T1 | L | L1 | L2 |
| 110 | 132 | 10 | 22 | 90 | 85 | 50 |
| 160 | 191 | 14 | 30 | 110 | 103 | 45 |
| 200 | 235 | 18 | 32 | 113 | 105 | 50 |

**Equal Tee**

B type

| SDR-11 | | | | | |
|---|---|---|---|---|---|
| Dn | D | T | L | L1 | L2 |
| 50*32 | 63 | 6 | 137 | 50 | 22.1 |
| 50*40 | 63 | 6 | 137 | 50 | 22.1 |
| 50*50 | 63 | 6 | 137 | 50 | 22.1 |
| 63*40 | 78 | 7 | 157 | 50 | 22.1 |
| 63*50 | 78 | 7 | 157 | 50 | 22.1 |
| 63*63 | 78 | 7 | 157 | 50 | 22.1 |
| 75*50 | 93 | 8 | 175 | 50 | 22.1 |
| 75*63 | 93 | 8 | 175 | 50 | 22.1 |
| 75*75 | 93 | 8 | 175 | 50 | 22.1 |
| 90*50 | 109 | 9 | 195 | 55 | 30 |
| 90*63 | 109 | 9 | 195 | 55 | 30 |
| 90*75 | 109 | 9 | 195 | 55 | 30 |
| 90*90 | 109 | 9 | 195 | 55 | 30 |
| 110*50 | 132.5 | 11.7 | 200 | 68 | 37.5 |
| 110*63 | 132.5 | 11.7 | 200 | 68 | 37.5 |
| 110*75 | 132.5 | 11.7 | 200 | 68 | 37.5 |
| 110*90 | 132.5 | 11.7 | 226.5 | 68 | 37.5 |
| 110*110 | 132.5 | 11.7 | 226.5 | 68 | 37.5 |
| 160*50 | 189 | 15.5 | 218.5 | 76 | 37.5 |
| 160*63 | 189 | 15.5 | 218.5 | 76 | 37.5 |
| 160*75 | 189 | 15.5 | 218.5 | 76 | 37.5 |
| 160*90 | 189 | 15.5 | 247 | 79 | 37.5 |
| 160*110 | 189 | 15.5 | 247 | 79 | 37.5 |
| 160*160 | 189 | 15.5 | 289 | 79 | 37.5 |
| 200*50 | 237 | 19 | 245 | 90 | 45 |
| 200*63 | 237 | 19 | 245 | 90 | 45 |
| 200*75 | 237 | 19 | 245 | 90 | 45 |
| 200*90 | 237 | 19 | 280 | 93 | 45 |
| 200*110 | 237 | 19 | 280 | 93 | 45 |
| 200*160 | 237 | 19 | 348 | 93 | 45 |
| 200*200 | 237 | 19 | 348 | 93 | 45 |

**Cross Fitting**

| SDR-11 | | | | |
|---|---|---|---|---|
| Dn | D | T | L | L1 |
| 110 | 132 | 10.5 | 251 | 70 |
| 160 | 186 | 14 | 325 | 80 |
| 200 | 236 | 16.5 | 384 | 90 |

**Coupler**

| Dn | D | T | L | L1 | L2 |
|---|---|---|---|---|---|
| 50 | 70 | 10 | 111 | 55 | 34 |
| 63 | 85 | 11 | 112 | 56 | 34 |
| 75 | 96 | 11 | 124 | 62 | 34 |
| 90 | 114 | 12 | 139 | 69 | 40 |
| 110 | 138 | 14 | 149 | 74 | 40 |
| 125 | 165 | 20 | 167 | 83 | 40 |
| 160 | 200 | 20 | 173 | 86 | 45 |
| 200 | 252 | 26 | 205 | 102 | 53 |
| 250 | 304 | 27 | 233 | 116 | 60 |
| 315 | 383 | 34 | 266 | 128 | 68 |

**Reducer**

| Dn2/Dn1 | D2/D1 | T2/T1 | L | L2/L1 | L4/L3 |
|---|---|---|---|---|---|
| 50 /110 | 70 /138 | 10 /14 | 145 | 55 /75 | 35 /45 |
| 75 /110 | 99 /138 | 12 /14 | 145 | 60 /75 | 35 /40 |
| 90 /110 | 114 /138 | 12 /14 | 150 | 65 /75 | 40 /45 |
| 90 /160 | 118 /200 | 14 /20 | 183 | 70 /90 | 35 /40 |
| 110 /160 | 138 /200 | 14 /20 | 186 | 75 /90 | 50 /50 |
| 110 /200 | 138 /248 | 14 /24 | 205 | 75 /100 | 50 /60 |
| 160 /200 | 200 /250 | 20 /25 | 221 | 90 /103 | 50 /60 |
| 160 /250 | 200 /306 | 20 /28 | 256 | 95 /125 | 45 /60 |
| 200 /250 | 250 /306 | 25 /28 | 262 | 105 /120 | 52 /65 |
| 250 /315 | 306 /383 | 28 /34 | 288 | 124 /135 | 55 /62 |

**Elbow 90°**

| Dn | D | T | L | L1 |
|---|---|---|---|---|
| 50 | 72 | 11 | 55 | 30 |
| 63 | 85 | 11 | 56 | 34 |
| 75 | 101 | 13 | 61 | 36 |
| 90 | 118 | 14 | 70 | 40 |
| 110 | 138 | 14 | 75 | 40 |
| 160 | 200 | 20 | 95 | 50 |
| 200 | 250 | 25 | 100 | 55 |
| 250 | 306 | 28 | 125 | 65 |
| 315 | 381 | 33 | 138 | 61 |

Elbow 45°

| Dn | D | T | L | L1 |
|---|---|---|---|---|
| 110 | 138 | 14 | 75 | 40 |
| 160 | 200 | 20 | 95 | 50 |
| 200 | 250 | 25 | 100 | 55 |
| 250 | 306 | 28 | 125 | 65 |
| 315 | 381 | 33 | 136 | 61 |

Equal Tee

| Dn | D | T | L | L1 | L2 |
|---|---|---|---|---|---|
| 110 | 138 | 14 | 240 | 75 | 40 |
| 160 | 204 | 22 | 313 | 93 | 48 |
| 200 | 252 | 26 | 360 | 105 | 58 |
| 250 | 306 | 28 | 438 | 125 | 65 |
| 315 | 383 | 34 | 511 | 134 | 61 |

Reducing Tee

| Dn | D | T | L | L1 | L2 |
|---|---|---|---|---|---|
| 110*90 | 138 | 14 | 240 | 75 | 40 |
| 160*110 | 204 | 22 | 313 | 93 | 48 |
| 200*110 | 252 | 26 | 360 | 105 | 58 |
| 200*160 | 252 | 26 | 360 | 105 | 58 |
| 250*110 | 306 | 28 | 438 | 125 | 65 |
| 250*160 | 306 | 28 | 438 | 125 | 65 |
| 250*200 | 306 | 28 | 438 | 125 | 65 |
| 315*110 | 383 | 34 | 511 | 134 | 61 |
| 315*160 | 383 | 34 | 511 | 134 | 61 |
| 315*200 | 383 | 34 | 511 | 134 | 61 |
| 315*250 | 383 | 34 | 511 | 134 | 61 |

Flange Adapter

| Dn | D | T | T1 | L | L1 | L2 |
|---|---|---|---|---|---|---|
| 110 | 138 | 14 | 22 | 105 | 95 | 55 |
| 160 | 196 | 18 | 32 | 125 | 112 | 60 |
| 200 | 240 | 20 | 35 | 125 | 105 | 55 |
| 250 | 300 | 25 | 38 | 150 | 137 | 75 |
| 315 | 365 | 25 | 42 | 171 | 161 | 100 |

**Coupler**

Double seal Coupler

| Dn | D | T | L | L1 | L2 |
|---|---|---|---|---|---|
| 50 | 68 | 9 | 100 | 49 | 18 |
| 63 | 81 | 9 | 120 | 59 | 20 |
| 75 | 93 | 9 | 144 | 70 | 20 |
| 90 | 112 | 11 | 170 | 83 | 25 |
| 110 | 136 | 13 | 183 | 90 | 35 |
| 160 | 194 | 17 | 197 | 97 | 35 |
| 200 | 240 | 20 | 230 | 113 | 46 |
| 250 | 292 | 21 | 260 | 128 | 50 |
| 315 | 375 | 30 | 276 | 137 | 60 |

**Elbow 90°**

Double seal Elbow 90°

| Dn | D | T | L | L1 |
|---|---|---|---|---|
| 50 | 68 | 9 | 49 | 18 |
| 63 | 81 | 9 | 59 | 20 |
| 75 | 93 | 9 | 70 | 20 |
| 90 | 112 | 11 | 83 | 25 |
| 110 | 136 | 13 | 90 | 35 |
| 160 | 194 | 17 | 97 | 35 |
| 200 | 240 | 20 | 113 | 46 |
| 250 | 292 | 21 | 128 | 50 |
| 315 | 375 | 30 | 137 | 60 |

**Elbow 45°**

Double seal Elbow 45°

| Dn | D | T | L | L1 |
|---|---|---|---|---|
| 50 | 68 | 9 | 49 | 18 |
| 63 | 81 | 9 | 59 | 20 |
| 75 | 93 | 9 | 70 | 20 |
| 90 | 112 | 11 | 83 | 25 |
| 110 | 136 | 13 | 90 | 35 |
| 160 | 194 | 17 | 97 | 35 |
| 200 | 240 | 20 | 113 | 46 |
| 250 | 292 | 21 | 128 | 50 |
| 315 | 375 | 30 | 137 | 60 |

## Equal Tee

Double seal Equal Tee

| Dn | D | T | L | L1 | L2 |
|---|---|---|---|---|---|
| 50 | 68 | 9 | 180 | 49 | 18 |
| 63 | 81 | 9 | 210 | 59 | 20 |
| 75 | 93 | 9 | 255 | 70 | 20 |
| 90 | 112 | 11 | 310 | 83 | 25 |
| 110 | 136 | 13 | 331 | 90 | 35 |
| 160 | 194 | 17 | 415 | 97 | 35 |
| 200 | 240 | 20 | 496 | 113 | 46 |
| 250 | 292 | 21 | 565 | 128 | 50 |
| 315 | 375 | 30 | 650 | 137 | 60 |

## Reducing Tee

Double seal Reducing Tee

| Dn | Dn2/Dn1 | D2/D1 | T2/T1 | L | L2/L1 | L4/L3 |
|---|---|---|---|---|---|---|
| 63*50 | 50/63 | 68/81 | 9/9 | 120 | 49/59 | 18/20 |
| 75*50 | 50/75 | 68/93 | 9/9 | 130 | 49/70 | 18/20 |
| 75*63 | 63/75 | 81/93 | 9/9 | 160 | 59/70 | 20/20 |
| 90*63 | 63/90 | 81/112 | 9/11 | 160 | 59/83 | 20/25 |
| 90*75 | 75/90 | 93/112 | 9/11 | 170 | 70/83 | 20/25 |
| 110*75 | 75/110 | 93/136 | 9/13 | 175 | 70/90 | 20/35 |
| 110*90 | 90/110 | 112/136 | 11/13 | 190 | 83/90 | 25/35 |
| 160*90 | 90/160 | 112/194 | 11/17 | 225 | 83/97 | 25/35 |
| 160*110 | 110/160 | 136/194 | 13/17 | 230 | 90/97 | 35/35 |
| 200*110 | 110/200 | 136/240 | 13/20 | 265 | 90/113 | 35/46 |
| 200*160 | 160/200 | 194/240 | 17/20 | 275 | 97/113 | 35/46 |
| 250*160 | 160/250 | 194/292 | 17/21 | 290 | 97/128 | 35/50 |
| 250*200 | 200/250 | 240/292 | 20/21 | 305 | 113/128 | 46/50 |
| 315*200 | 200/315 | 240/375 | 20/30 | 335 | 113/137 | 46/60 |
| 315*250 | 250/315 | 292/375 | 21/30 | 350 | 128/137 | 50/60 |

## Flange Adapter

Double seal Flange Adapter

| Dn | D | T | L | L1 | L2 |
|---|---|---|---|---|---|
| 50 | 68 | 9 | 77 | 73 | 33 |
| 63 | 81 | 9 | 77 | 73 | 37 |
| 75 | 93 | 9 | 77 | 73 | 37 |
| 90 | 112 | 11 | 85 | 80 | 40 |
| 110 | 136 | 13 | 105 | 98 | 43 |
| 160 | 194 | 17 | 110 | 102 | 46 |
| 200 | 240 | 20 | 115 | 105 | 48 |
| 250 | 292 | 21 | 140 | 135 | 55 |
| 315 | 375 | 30 | 145 | 140 | 60 |

**Flange Plate**

Nylon Coated, PN1.6Mpa

| PE | Standard | φdn | φd | K | φE | N | Bolts |
|---|---|---|---|---|---|---|---|
| 20 | 15 | 95 | 27 | 65 | 14 | 4 | M12 |
| 25 | 20 | 105 | 32 | 75 | 14 | 4 | |
| 32 | 25 | 115 | 39 | 85 | 14 | 4 | |
| 40 | 32 | 135 | 47 | 100 | 18 | 4 | M16 |
| 50 | 40 | 145 | 57 | 110 | 18 | 4 | |
| 63 | 50 | 160 | 70 | 125 | 18 | 4 | |
| 75 | 65 | 180 | 81 | 145 | 18 | 4 | |
| 90 | 80 | 195 | 97 | 160 | 18 | 8 | |
| 110 | 100 | 215 | 116 | 180 | 18 | 8 | |
| 125 | 100 | 215 | 135 | 180 | 18 | 8 | |
| 140 | 125 | 245 | 150 | 210 | 18 | 8 | |
| 160 | 150 | 280 | 170 | 240 | 22 | 8 | M20 |
| 180 | 150 | 280 | 190 | 240 | 22 | 8 | |
| 200 | 200 | 335 | 222 | 295 | 22 | 12 | |
| 225 | 200 | 335 | 235 | 295 | 22 | 12 | |
| 250 | 250 | 400 | 276 | 355 | 26 | 12 | M24 |
| 280 | 250 | 400 | 292 | 355 | 26 | 12 | |
| 315 | 300 | 450 | 328 | 410 | 26 | 12 | |
| 355 | 350 | 510 | 380 | 470 | 26 | 16 | |
| 400 | 400 | 570 | 430 | 525 | 30 | 16 | M27 |
| 450 | 450 | 630 | 484 | 585 | 30 | 20 | |
| 500 | 500 | 705 | 534 | 650 | 33 | 20 | M30 |
| 560 | 600 | 830 | 634 | 770 | 36 | 20 | M33 |
| 630 | 600 | 830 | 634 | 770 | 36 | 20 | |
| 710 | 700 | 900 | 724 | 840 | 36 | 24 | |
| 800 | 800 | 1010 | 824 | 950 | 39 | 24 | M36 |
| 900 | 900 | 1110 | 930 | 1050 | 39 | 28 | |
| 1000 | 1000 | 1220 | 1025 | 1170 | 42 | 28 | M39 |
| 1200 | 1200 | 1455 | 1260 | 1390 | 48 | 32 | M45 |

**Female adapter**

| SDR-11 | |
|---|---|
| Dn | L |
| 63 | 72 |
| 75 | 80 |
| 90 | 81 |
| 110 | 85 |

| SDR-11 | |
|---|---|
| Dn | L |
| 63 | 72 |
| 75 | 80 |
| 90 | 81 |
| 110 | 85 |

**Male adapter**

**Flange Plate**

Nylon Coated, PN2.0Mpa

| PE | Standard | φdn | φd | K | φE | N | Bolts |
|---|---|---|---|---|---|---|---|
| 20 | 15 | 95 | 27 | 65 | 14 | 4 | M12 |
| 25 | 20 | 105 | 32 | 75 | 14 | 4 | |
| 32 | 25 | 115 | 39 | 85 | 14 | 4 | |
| 40 | 32 | 135 | 47 | 100 | 18 | 4 | M16 |
| 50 | 40 | 145 | 57 | 110 | 18 | 4 | |
| 63 | 50 | 160 | 70 | 125 | 18 | 4 | |
| 75 | 65 | 180 | 81 | 145 | 18 | 4 | |
| 90 | 80 | 195 | 97 | 160 | 18 | 8 | |
| 110 | 100 | 215 | 116 | 180 | 18 | 8 | |
| 125 | 100 | 215 | 135 | 180 | 18 | 8 | |
| 140 | 125 | 245 | 150 | 210 | 18 | 8 | |
| 160 | 150 | 280 | 170 | 240 | 22 | 8 | M20 |
| 180 | 150 | 280 | 190 | 240 | 22 | 8 | |
| 200 | 200 | 335 | 222 | 295 | 22 | 8 | |
| 225 | 200 | 335 | 235 | 295 | 22 | 8 | |
| 250 | 250 | 390 | 276 | 350 | 22 | 12 | |
| 280 | 250 | 390 | 292 | 350 | 22 | 12 | |
| 315 | 300 | 440 | 328 | 400 | 22 | 12 | |
| 355 | 350 | 500 | 380 | 460 | 22 | 16 | |
| 400 | 400 | 565 | 430 | 515 | 26 | 16 | M24 |
| 450 | 450 | 615 | 484 | 565 | 26 | 20 | |
| 500 | 500 | 670 | 534 | 620 | 26 | 20 | |
| 560 | 600 | 780 | 575 | 725 | 30 | 20 | M27 |
| 630 | 600 | 780 | 650 | 725 | 30 | 20 | |
| 710 | 700 | 895 | 730 | 840 | 30 | 24 | |
| 800 | 800 | 1010 | 825 | 950 | 33 | 24 | M30 |
| 900 | 900 | 1110 | 930 | 1050 | 33 | 28 | |
| 1000 | 1000 | 1220 | 1025 | 1160 | 36 | 28 | M33 |
| 1200 | 1200 | 1455 | 1260 | 1380 | 39 | 32 | M36 |

**PE/Steel adapter**

| SDR-11 | |
|---|---|
| Dn | L |
| 75 | 80 |
| 90 | 80 |
| 110 | 84 |
| 160 | 90 |
| 200 | 90 |

## Large size Coupler

| Large size |
|---|
| 355 |
| 400 |
| 450 |
| 500 |
| 560 |
| 630 |
| 710 |
| 800 |
| 900 |
| 1000 |
| 1200 |
| 1400 |

## Large size Elbow

| Large size |
|---|
| 355 |
| 400 |
| 450 |
| 500 |
| 560 |
| 630 |
| 710 |
| 800 |
| 900 |
| 1000 |

## Coupler

SDR11
PE100

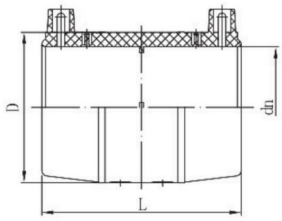


| Code | Size (mm) | L(mm) | D(mm) | Unit Weight (kg) | QTY /box |
|---|---|---|---|---|---|
| FX6311C | dn63 | 104 | 78 | 0.13 | 120 |
| FX7511C | dn75 | 116 | 92 | 0.22 | 84 |
| FX9011C | dn90 | 142 | 111 | 0.37 | 48 |
| FX11011C | dn110 | 150 | 135 | 0.56 | 24 |
| FX12511C | dn125 | 164 | 154 | 1.02 | 16 |
| FX14011C | dn140 | 176 | 172 | 1.32 | 12 |
| FX16011C | dn160 | 186 | 196 | 1.49 | 12 |
| FX18011C | dn180 | 196 | 221 | 2.36 | 6 |
| FX20011C | dn200 | 200 | 245 | 2.44 | 6 |
| FX22511C | dn225 | 210 | 276 | 3.25 | 6 |
| FX25011C | dn250 | 220 | 307 | 4.11 | 2 |
| FX28011C | dn280 | 230 | 343 | 5.42 | 4 |
| FX31511C | dn315 | 240 | 386 | 7.16 | 1 |

## Reducer

SDR11
PE100

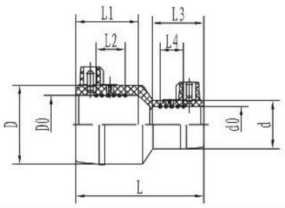


| Code | Size (mm) | Dn2/Dn1 | Dn2/Dn1 | T2/T1 | L(mm) | L2/L1 | L4/L3 | Unit Weight (kg) | QTY /box |
|---|---|---|---|---|---|---|---|---|---|
| FX633211R | 63-32 | | | | | | | | |
| FX634011R | 63-40 | | | | | | | | |
| FX635011R | 63-50 | | | | | | | | |
| FX756311R | 75-63 | | | | | | | | |
| FX906311R | 90-63 | | | | | | | | |
| FX907511R | 90-75 | | | | | | | | |
| FX1106311R | 110-63 | | | | | | | | |
| FX1107511R | 110-75 | | | | | | | | |
| FX1109011R | 110-90 | | | | | | | | |
| FX1259011R | 125-90 | | | | | | | | |
| FX1609011R | 160-90 | | | | | | | | |
| FX16011011R | 160-110 | | | | | | | | |
| FX20011011R | 200-110 | | | | | | | | |
| FX25016011R | 250-160 | | | | | | | | |
| FX31516011R | 315-160 | | | | | | | | |
| FX31520011R | 315-200 | | | | | | | | |
| FX31525011R | 315-250 | | | | | | | | |

# Reducing Tee SDR11 PE100

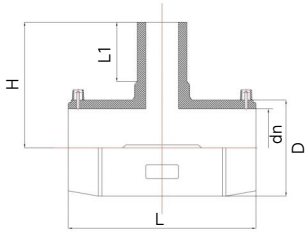


| Code | Size (mm) | H | L(mm) | D(mm) | L1 | Unit Weight (kg) | QTY /box |
|---|---|---|---|---|---|---|---|
| FX633211T | dn63*32*63 | 109 | 144 | 78 | 46 | 0.24 | |
| FX634011T | dn63*40*63 | 114 | 144 | 78 | 51 | 0.25 | |
| FX635011T | dn63*50*63 | 120 | 166 | 78 | 57 | 0.31 | |
| FX756311T | dn75*63*75 | 133 | 189 | 92 | 64 | 0.47 | |
| FX906311T | dn90*63*90 | 143 | 204 | 111 | 64 | 0.67 | |
| FX907511T | dn90*75*90 | 152 | 229 | 111 | 72 | 0.8 | |
| FX1106311T | dn110*63*110 | 158 | 218 | 135 | 65 | 1.15 | 12 |
| FX1107511T | dn110*75*110 | 164 | 258 | 135 | 72 | 1.22 | |
| FX1109011T | dn110*90*110 | 173 | 258 | 135 | 80 | 1.33 | 8 |
| FX12511011T | dn125*110*125 | 185 | 282 | 154 | 83 | 1.88 | |
| FX1609011T | dn160*90*160 | 203 | 294 | 196 | 80 | 2.7 | 6 |
| FX16011011T | dn160*110*160 | 206 | 294 | 196 | 83 | 2.75 | 6 |
| FX16014011T | dn160*140*160 | 218 | 336 | 196 | 94 | 3.46 | 4 |
| FX2009011T | dn200*90*200 | 227 | 308 | 245 | 80 | 4.75 | 4 |
| FX20011011T | dn200*110*200 | 230 | 308 | 245 | 83 | 4.13 | 4 |
| FX20014011T | dn200*140*200 | 242 | 350 | 245 | 94 | 5.05 | 3 |
| FX20016011T | dn200*160*200 | 248 | 350 | 245 | 100 | 5.3 | 3 |
| FX22516011T | dn225*160*225 | 263 | 374 | 276 | 100 | 8.5 | 2 |
| FX22520011T | dn225*200*225 | 277 | 415 | 276 | 114 | 10.2 | 2 |
| FX25016011T | dn250*160*250 | 279 | 370 | 307 | 100 | 8.55 | |
| FX25020011T | dn250*200*250 | 292 | 440 | 307 | 114 | 10.39 | |
| FX31511011T | dn315*110*315 | 301 | 358 | 386 | 83 | 12.14 | |
| FX31516011T | dn315*160*315 | 318 | 390 | 386 | 100 | 13.62 | |
| FX31520011T | dn315*200*315 | 332 | 424 | 386 | 114 | 15.3 | |
| FX31525011T | dn315*250*315 | 349 | 470 | 386 | 131 | 17.85 | |

# Equal Tee SDR11 PE100

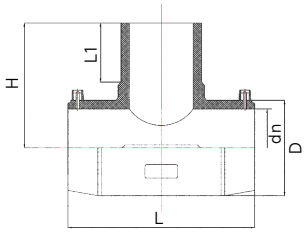


| Code | Size (mm) | H | L(mm) | D(mm) | L1 | Unit Weight (kg) | QTY /box |
|---|---|---|---|---|---|---|---|
| FX6311T | dn63 | 126 | 166 | 78 | 64 | 0.35 | |
| FX7511T | dn75 | 142 | 189 | 92 | 72 | 0.52 | |
| FX9011T | dn90 | 160 | 229 | 111 | 80 | 0.89 | |
| FX11011T | dn110 | 175 | 258 | 135 | 83 | 1.6 | 8 |
| FX12511T | dn125 | 190 | 282 | 154 | 89 | 2 | |
| FX16011T | dn160 | 224 | 336 | 196 | 100 | 3.67 | 4 |
| FX20011T | dn200 | 262 | 382 | 245 | 114 | 7.9 | 2 |
| FX22511T | dn225 | 285 | 415 | 276 | 122 | 10.65 | 2 |
| FX25011T | dn250 | 310 | 440 | 307 | 131 | 11.67 | |
| FX31511T | dn315 | 370 | 518 | 386 | 152 | 21.4 | |

# Flange Adaptor SDR11 PE100

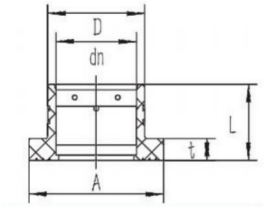


| Code | Size (mm) | A | t | L(mm) | D(mm) | Unit Weight (kg) | QTY /box |
|---|---|---|---|---|---|---|---|
| FX6311F | dn63 | 105 | 16 | 60 | 75 | 0.16 | |
| FX7511F | dn75 | 125 | 20 | 70 | 90 | 0.28 | 75 |
| FX9011F | dn90 | 145 | 20 | 70 | 107 | 0.4 | 36 |
| FX11011F | dn110 | 175 | 23 | 75 | 131 | 0.55 | 36 |
| FX12511F | dn125 | 190 | 23 | 80 | 149 | 0.71 | |
| FX14011F | dn140 | 220 | 24 | 90 | 166 | 1.02 | |
| FX16011F | dn160 | 240 | 25 | 100 | 192 | 1.33 | 18 |
| FX20011F | dn200 | 293 | 30 | 115 | 237 | 2.2 | 8 |
| FX22511F | dn225 | 329 | 32 | 120 | 267 | 3.09 | |
| FX25011F | dn250 | 355 | 35 | 125 | 297 | 3.61 | 6 |
| FX31511F | dn315 | 450 | 40 | 135 | 375 | 6.76 | |

# Elbow 45° SDR11 PE100

| Code | Size (mm) | H | L(mm) | D(mm) | Unit Weight (kg) | QTY /box |
|---|---|---|---|---|---|---|
| FX631145E | dn63 | 74 | 52 | 78 | 0.21 | |
| FX751145E | dn75 | 83 | 58 | 92 | 0.32 | |
| FX901145E | dn90 | 102 | 71 | 111 | 0.57 | |
| FX1101145E | dn110 | 110 | 75 | 135 | 0.86 | 12 |
| FX1601145E | dn160 | 142 | 93 | 196 | 2.34 | 9 |
| FX2001145E | dn200 | 162 | 100 | 245 | 4.10 | 4 |
| FX2251145E | dn225 | 178 | 105 | 276 | 6.19 | 2 |
| FX2501145E | dn250 | 188 | 110 | 307 | 8.44 | 2 |
| FX3151145E | dn315 | 218 | 120 | 386 | 13.91 | |

# Elbow 90° SDR11 PE100

| Code | Size (mm) | H | L(mm) | D(mm) | Unit Weight (kg) | QTY /box |
|---|---|---|---|---|---|---|
| FX631190E | dn63 | 92 | 52 | 78 | 0.23 | 48 |
| FX751190E | dn75 | 105 | 58 | 92 | 0.38 | 24 |
| FX901190E | dn90 | 126 | 71 | 111 | 0.65 | 24 |
| FX1101190E | dn110 | 142 | 75 | 135 | 1.03 | 16 |
| FX1601190E | dn160 | 188 | 93 | 196 | 2.96 | 6 |
| FX2001190E | dn200 | 218 | 100 | 245 | 5.21 | 4 |
| FX2251190E | dn225 | 238 | 105 | 276 | 8.9 | 2 |
| FX2501190E | dn250 | 255 | 110 | 307 | 10.44 | 2 |
| FX3151190E | dn315 | 305 | 120 | 386 | 18.54 | 1 |

# Saddle Branch SDR11 PE100

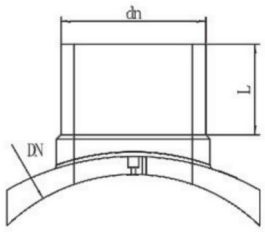


| Code | Size (mm) | L(mm) | Unit Weight (kg) | QTY /box |
|---|---|---|---|---|
| FX3159011S | 315-90 | 70 | | |
| FX3559011S | 355-90 | 70 | | |
| FX4009011S | 400-90 | 70 | | |
| FX4509011S | 450-90 | 70 | | |
| FX5009011S | 500-90 | 70 | | |
| FX5609011S | 560-90 | 70 | | |
| FX6309011S | 630-90 | 70 | | |
| FX7109011S | 710-90 | 70 | | |
| FX31511011S | 315-110 | 70 | | |
| FX35511011S | 355-110 | 70 | | |
| FX40011011S | 400-110 | 70 | | |
| FX45011011S | 450-110 | 70 | | |
| FX50011011S | 500-110 | 70 | | |
| FX56011011S | 560-110 | 70 | | |
| FX63011011S | 630-110 | 70 | | |
| FX71011011S | 710-110 | 70 | | |
| FX31514011S | 315-140 | 80 | | |
| FX35514011S | 355-140 | 80 | | |
| FX40014011S | 400-140 | 80 | | |
| FX45014011S | 450-140 | 80 | | |
| FX50014011S | 500-140 | 80 | | |
| FX56014011S | 560-140 | 80 | | |
| FX63014011S | 630-140 | 80 | | |
| FX71014011S | 710-140 | 80 | | |
| FX31516011S | 315-160 | 80 | | |
| FX35516011S | 355-160 | 80 | | |
| FX40016011S | 400-160 | 80 | | |
| FX45016011S | 450-160 | 80 | | |
| FX50016011S | 500-160 | 80 | | |
| FX56016011S | 560-160 | 80 | | |
| FX63016011S | 630-160 | 80 | | |
| FX71016011S | 710-160 | 80 | | |

**Reducer**

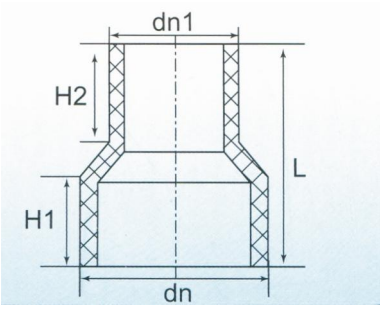


| Specification | dn | dn1 | H1 | H2 | L |
|---|---|---|---|---|---|
| S75-50 | 75 | 50 | 67 | 60.5 | 140 |
| S75-63 | 75 | 63 | 67 | 60.5 | 140 |
| S90-50 | 90 | 50 | 75 | 63.5 | 155 |
| S90-63 | 90 | 63 | 75 | 63.5 | 155 |
| S90-75 | 90 | 75 | 75 | 71 | 155 |
| S110-50 | 110 | 50 | 77 | 71 | 166 |
| S110-63 | 110 | 63 | 77 | 73.5 | 166 |
| S110-75 | 110 | 75 | 77 | 74 | 166 |
| S110-90 | 110 | 90 | 77 | 76.5 | 166 |
| S125-50 | 125 | 50 | 78 | 72 | 168.5 |
| S125-63 | 125 | 63 | 78 | 73.5 | 168.5 |
| S125-75 | 125 | 75 | 78 | 73.5 | 168.5 |
| S125-90 | 125 | 90 | 78 | 76.5 | 168.5 |
| S125-110 | 125 | 90 | 78 | 78 | 168.5 |
| S140-63 | 140 | 63 | 80 | 71 | 170 |
| S140-75 | 140 | 75 | 80 | 74 | 170 |
| S140-90 | 140 | 90 | 80 | 76 | 170 |
| S140-110 | 140 | 110 | 80 | 77 | 170 |
| S140-125 | 140 | 125 | 80 | 77 | 170 |
| S160-63 | 160 | 63 | 80 | 71 | 179 |
| S160-75 | 160 | 75 | 80 | 72 | 179 |
| S160-90 | 160 | 90 | 80 | 74 | 179 |
| S160-110 | 160 | 110 | 80 | 77 | 179 |
| S160-125 | 160 | 125 | 80 | 82 | 179 |
| S160-140 | 160 | 140 | 80 | 84 | 179 |
| S180-63 | 180 | 63 | 80 | 75 | 180 |
| S180-75 | 180 | 75 | 80 | 75 | 180 |
| S180-90 | 180 | 90 | 80 | 79 | 180 |
| S180-110 | 180 | 110 | 80 | 86 | 180 |
| S180-125 | 180 | 125 | 80 | 86 | 180 |
| S180-140 | 180 | 140 | 80 | 86 | 180 |
| S180-160 | 180 | 160 | 80 | 86 | 180 |
| S200-63 | 200 | 63 | 80 | 78 | 185 |
| S200-75 | 200 | 75 | 80 | 78 | 185 |
| S200-90 | 200 | 90 | 80 | 80 | 185 |
| S200-110 | 200 | 110 | 80 | 82 | 185 |
| S200-125 | 200 | 125 | 80 | 82 | 185 |
| S200-140 | 200 | 140 | 80 | 82.5 | 185 |
| S200-160 | 200 | 160 | 80 | 82.5 | 185 |
| S200-180 | 200 | 180 | 80 | 82.5 | 185 |
| S225-90 | 225 | 90 | 80 | 80 | 180 |
| S225-110 | 225 | 110 | 80 | 80 | 180 |
| S225-125 | 225 | 125 | 80 | 80 | 180 |
| S225-160 | 225 | 160 | 80 | 80 | 180 |

**Reducer**

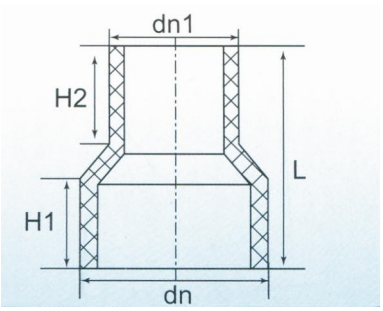


| Specification | dn | dn1 | H1 | H2 | L |
|---|---|---|---|---|---|
| S225-180 | 225 | 180 | 80 | 80 | 180 |
| S225-200 | 225 | 200 | 80 | 80 | 180 |
| S250-90 | 250 | 90 | 90 | 80 | 215 |
| S250-110 | 250 | 110 | 90 | 81 | 205 |
| S250-125 | 250 | 125 | 90 | 81 | 205 |
| S250-160 | 250 | 160 | 90 | 82 | 205 |
| S250-180 | 250 | 180 | 90 | 83 | 205 |
| S250-200 | 250 | 200 | 90 | 85 | 205 |
| S250-225 | 250 | 225 | 90 | 85 | 205 |
| S280-110 | 280 | 110 | 90 | 78 | 192 |
| S280-125 | 280 | 125 | 90 | 81 | 192 |
| S280-160 | 280 | 160 | 90 | 85 | 192 |
| S280-180 | 280 | 180 | 90 | 85 | 192 |
| S280-200 | 280 | 200 | 90 | 85 | 192 |
| S280-225 | 280 | 225 | 90 | 85 | 192 |
| S280-250 | 280 | 250 | 90 | 87 | 192 |
| S315-90 | 315 | 90 | 90 | 80 | 204 |
| S315-110 | 315 | 110 | 90 | 80 | 204 |
| S315-125 | 315 | 125 | 90 | 80 | 204 |
| S315-140 | 315 | 140 | 90 | 80 | 204 |
| S315-160 | 315 | 160 | 90 | 80 | 204 |
| S315-180 | 315 | 180 | 90 | 80 | 204 |
| S315-200 | 315 | 200 | 90 | 87 | 204 |
| S315-225 | 315 | 225 | 90 | 87 | 204 |
| S315-250 | 315 | 250 | 90 | 85 | 204 |
| S315-280 | 315 | 280 | 90 | 85 | 204 |
| S355-110 | 355 | 110 | 90 | 83 | 205 |
| S355-160 | 355 | 160 | 90 | 86 | 205 |
| S355-200 | 355 | 200 | 90 | 90 | 205 |
| S355-225 | 355 | 225 | 90 | 85 | 205 |
| S355-250 | 355 | 250 | 90 | 93 | 205 |
| S355-280 | 355 | 280 | 90 | 92 | 205 |
| S355-315 | 355 | 315 | 90 | 95 | 205 |
| S400-110 | 400 | 110 | 90 | 85 | 215 |
| S400-160 | 400 | 160 | 90 | 85 | 215 |
| S400-200 | 400 | 200 | 90 | 85 | 215 |
| S400-225 | 400 | 225 | 90 | 83 | 215 |
| S400-250 | 400 | 250 | 90 | 80 | 215 |
| S400-280 | 400 | 280 | 90 | 85 | 215 |
| S400-315 | 400 | 315 | 90 | 85 | 215 |
| S400-355 | 400 | 355 | 90 | 85 | 215 |

**Reducer**

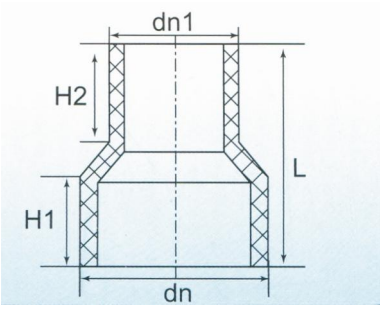


| Specification | dn | dn1 | H1 | H2 | L |
|---|---|---|---|---|---|
| S450-200 | 450 | 200 | 90 | 90 | 235 |
| S450-250 | 450 | 250 | 90 | 92 | 235 |
| S450-280 | 450 | 280 | 90 | 95 | 235 |
| S450-315 | 450 | 315 | 90 | 100 | 235 |
| S450-355 | 450 | 355 | 90 | 105 | 235 |
| S450-400 | 450 | 400 | 90 | 108 | 235 |
| S500-200 | 500 | 200 | 90 | 110 | 255 |
| S500-250 | 500 | 250 | 90 | 120 | 255 |
| S500-315 | 500 | 315 | 90 | 122 | 255 |
| S500-355 | 500 | 355 | 90 | 133 | 255 |
| S500-400 | 500 | 400 | 90 | 135 | 255 |
| S500-450 | 500 | 450 | 90 | 140 | 255 |
| S560-315 | 560 | 315 | 100 | 120 | 245 |
| S560-355 | 560 | 355 | 100 | 130 | 250 |
| S560-400 | 560 | 400 | 100 | 130 | 250 |
| S560-450 | 560 | 450 | 100 | 130 | 255 |
| S560-500 | 560 | 500 | 100 | 140 | 255 |
| S630-315 | 630 | 315 | 100 | 125 | 275 |
| S630-355 | 630 | 355 | 95 | 125 | 275 |
| S630-400 | 630 | 400 | 95 | 140 | 275 |
| S630-450 | 630 | 450 | 95 | 130 | 275 |
| S630-500 | 630 | 500 | 95 | 142 | 275 |
| S630-560 | 630 | 560 | 95 | 150 | 275 |
| S710-315 | 710 | 315 | 130 | 120 | 358 |
| S710-355 | 710 | 355 | 130 | 120 | 358 |
| S710-400 | 710 | 400 | 130 | 120 | 358 |
| S710-450 | 710 | 450 | 130 | 120 | 323 |
| S710-500 | 710 | 500 | 130 | 120 | 323 |
| S710-560 | 710 | 560 | 130 | 120 | 278 |
| S710-630 | 710 | 630 | 130 | 120 | 278 |
| S800-315 | 800 | 315 | 130 | 120 | 420 |
| S800-355 | 800 | 355 | 130 | 120 | |
| S800-400 | 800 | 400 | 130 | 120 | 390 |
| S800-450 | 800 | 450 | 130 | 120 | 355 |
| S800-500 | 800 | 500 | 130 | 120 | 355 |
| S800-560 | 800 | 560 | 130 | 115 | 309 |
| S800-630 | 800 | 630 | 130 | 120 | 309 |
| S800-710 | 800 | 710 | 130 | 120 | 309 |

## Elbow 90°

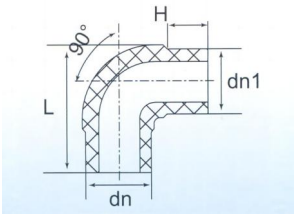


| Specification | dn/dn1 | L | H |
|---|---|---|---|
| L63-90° | 63 | 131 | 63 |
| L75-90° | 75 | 150 | 70 |
| L90-90° | 90 | 173 | 78 |
| L110-90° | 110 | 195 | 80 |
| L125-90° | 125 | 211 | 77 |
| L140-90° | 140 | 228 | 79 |
| L160-90° | 160 | 245 | 80 |
| L180-90° | 180 | 267 | 80 |
| L200-90° | 200 | 290 | 85 |
| L225-90° | 225 | 321 | 90 |
| L250-90° | 250 | 356 | 105 |
| L280-90° | 280 | 395 | 105 |
| L315-90° | 315 | 430 | 110 |
| L355-90° | 355 | 463 | 110 |
| L400-90° | 400 | 519 | 110 |
| L450-90° | 450 | 570 | 110 |
| L500-90° | 500 | 610 | 110 |
| L560-90° | 560 | 700 | 125 |
| L630-90° | 630 | 772 | 130 |
| L710-90° | 710 | 911 | 180 |
| L800-90° | 800 | 1002 | 180 |

## Elbow 45°

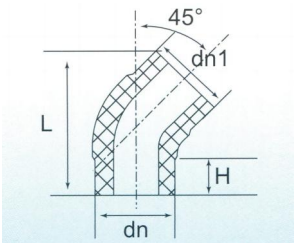


| Specification | dn/dn1 | L | H |
|---|---|---|---|
| L63-45° | 63 | 159 | 63 |
| L75-45° | 75 | 180 | 70 |
| L90-45° | 90 | 204 | 78 |
| L110-45° | 110 | 222 | 80 |
| L125-45° | 125 | 240 | 77 |
| L140-45° | 140 | 250 | 79 |
| L160-45° | 160 | 264 | 80 |
| L180-45° | 180 | 270 | 80 |
| L200-45° | 200 | 295 | 85 |
| L225-45° | 225 | 329 | 90 |
| L250-45° | 250 | 357 | 105 |
| L280-45° | 280 | 392 | 105 |
| L315-45° | 315 | 417 | 110 |
| L355-45° | 355 | 433 | 110 |
| L400-45° | 400 | 483 | 110 |
| L450-45° | 450 | 520 | 110 |
| L500-45° | 500 | 575 | 110 |
| L560-45° | 560 | 631 | 125 |
| L630-45° | 630 | 685 | 130 |
| L710-45° | 710 | 833 | 180 |
| L800-45° | 800 | 897 | 180 |

## End Cap

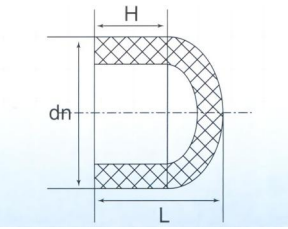


| Specification | dn | L | H |
|---|---|---|---|
| D75 | 75 | 81 | 67 |
| D90 | 90 | 90.5 | 75 |
| D110 | 110 | 94 | 77 |
| D125 | 125 | 94 | 77 |
| D140 | 140 | 96 | 79 |
| D160 | 160 | 99 | 80 |
| D180 | 180 | 108 | 80 |
| D200 | 200 | 103.5 | 80 |
| D225 | 225 | 105 | 80 |
| D250 | 250 | 115 | 90 |
| D280 | 280 | 118 | 90 |
| D315 | 315 | 130 | 90 |
| D355 | 355 | 131 | 90 |
| D400 | 400 | 132 | 90 |
| D450 | 450 | 138 | 90 |
| D500 | 500 | 130 | 90 |
| D630 | 630 | 145 | 95 |
| D710 | 710 | 175 | 137 |
| D800 | 800 | 180 | 143 |
| D900 | 900 | 170 | 120 |
| D1000 | 1000 | 175 | 125 |

## Equal Tee

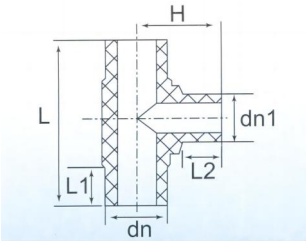


| Specification | dn/dn1 | L1 | L2 | L | H |
|---|---|---|---|---|---|
| T63-63 | 63 | 63 | 63 | 198 | 99 |
| T75-75 | 75 | 70 | 70 | 224 | 112 |
| T90-90 | 90 | 78 | 78 | 255 | 127.5 |
| T110-110 | 110 | 80 | 80 | 279 | 139.5 |
| T125-125 | 125 | 80 | 80 | 305 | 152.6 |
| T140-140 | 140 | 80 | 80 | 323 | 162 |
| T160-160 | 160 | 80 | 80 | 329 | 164.5 |
| T180-180 | 180 | 80 | 80 | 350 | 175 |
| T200-200 | 200 | 85 | 85 | 382 | 191 |
| T225-225 | 225 | 85 | 85 | 417 | 208 |
| T250-250 | 250 | 90 | 90 | 474 | 237.5 |
| T280-280 | 280 | 105 | 105 | 506 | 257 |
| T315-315 | 315 | 105 | 105 | 550 | 275 |
| T355-355 | 355 | 100 | 100 | 576 | 297 |
| T400-400 | 400 | 110 | 110 | 645 | 330 |
| T450-450 | 450 | 110 | 120 | 700 | 360 |
| T500-500 | 500 | 110 | 140 | 748 | 424 |
| T560-560 | 560 | 125 | 135 | 846 | 433 |
| T630-630 | 630 | 130 | 140 | 928 | 474 |
| T710-710 | 710 | 180 | 180 | 1072 | 541 |
| T800-800 | 800 | 185 | 185 | 1202 | 606 |

**Reducing Tee**

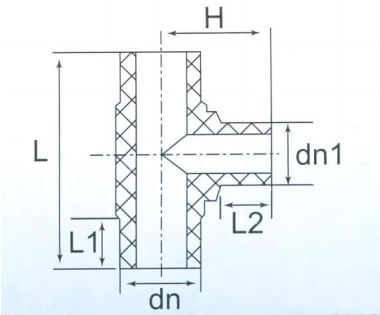


| Specification | dn | dn1 | L1 | L2 | L | H |
|---|---|---|---|---|---|---|
| T75-50 | 75 | 50 | 68.5 | 57 | 199.5 | 94.5 |
| T75-63 | 75 | 63 | 68.5 | 63 | 213 | 100.5 |
| T90-50 | 90 | 50 | 78 | 57 | 214.7 | 102 |
| T90-63 | 90 | 63 | 78 | 63 | 227 | 108 |
| T90-75 | 90 | 75 | 78 | 70 | 239 | 115 |
| T110-50 | 110 | 50 | 75 | 60 | 211 | 120 |
| T110-63 | 110 | 63 | 75 | 70 | 224 | 130 |
| T110-75 | 110 | 75 | 75 | 75 | 236 | 135 |
| T110-90 | 110 | 90 | 75 | 78 | 250 | 138 |
| T125-50 | 125 | 50 | 77 | 60 | 216 | 131.7 |
| T125-63 | 125 | 63 | 77 | 63 | 229 | 134.7 |
| T125-75 | 125 | 75 | 77 | 70 | 241 | 142.2 |
| T125-90 | 125 | 90 | 77 | 72 | 256 | 144.2 |
| T125-110 | 125 | 110 | 77 | 76.5 | 276 | 149 |
| T140-63 | 140 | 63 | 80 | 63 | 224 | 142.5 |
| T140-75 | 140 | 75 | 80 | 70 | 249 | 149.5 |
| T140-90 | 140 | 90 | 80 | 72 | 264 | 152.5 |
| T140-110 | 140 | 110 | 80 | 75 | 284 | 155.5 |
| T140-125 | 140 | 125 | 80 | 79 | 299 | 159.5 |
| T160-63 | 160 | 63 | 80 | 70 | 234 | 155 |
| T160-75 | 160 | 75 | 80 | 75 | 246 | 160 |
| T160-90 | 160 | 90 | 80 | 78 | 261 | 163 |
| T160-110 | 160 | 110 | 80 | 80 | 280 | 165 |
| T160-125 | 160 | 125 | 80 | 80 | 295 | 165 |
| T180-63 | 180 | 63 | 80 | 75 | 235 | 171 |
| T180-75 | 180 | 75 | 80 | 75 | 247 | 171 |
| T180-90 | 180 | 90 | 80 | 79 | 261 | 175 |
| T180-110 | 180 | 110 | 80 | 80 | 281 | 176 |
| T180-125 | 180 | 125 | 80 | 80 | 295 | 175 |
| T180-140 | 180 | 140 | 80 | 80 | 310 | 175 |
| T180-160 | 180 | 160 | 80 | 80 | 330 | 175 |
| T200-63 | 200 | 63 | 83.5 | 75 | 241 | 181 |
| T200-75 | 200 | 75 | 83.5 | 75 | 253 | 181 |
| T200-90 | 200 | 90 | 83.5 | 79 | 267 | 185 |
| T200-110 | 200 | 110 | 83.5 | 80 | 287 | 186 |
| T200-125 | 200 | 125 | 83.5 | 85 | 301 | 190 |
| T200-160 | 200 | 160 | 83.5 | 85 | 340 | 190 |
| T225-63 | 225 | 63 | 90 | 75 | 302 | 226 |
| T225-75 | 225 | 75 | 90 | 75 | 302 | 226 |
| T225-90 | 225 | 90 | 90 | 75 | 302 | 226 |
| T225-110 | 225 | 110 | 90 | 85 | 302 | 226 |
| T225-125 | 225 | 125 | 90 | 75 | 351 | 226 |
| T225-140 | 225 | 140 | 90 | 75 | 351 | 226 |
| T225-160 | 225 | 160 | 90 | 85 | 351 | 226 |
| T225-180 | 225 | 180 | 90 | 78 | 391 | 226 |
| T225-200 | 225 | 200 | 90 | 85 | 391 | 226 |

**Reducing Tee**

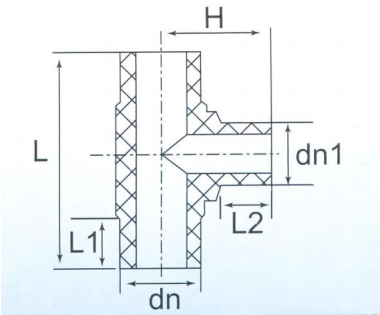


| Specification | dn | dn1 | L1 | L2 | L | H |
|---|---|---|---|---|---|---|
| T250-63 | 250 | 63 | 100 | 77 | 305 | 217 |
| T250-75 | 250 | 75 | 100 | 77 | 305 | 217 |
| T250-90 | 250 | 90 | 100 | 77 | 305 | 217 |
| T250-110 | 250 | 110 | 110 | 100 | 325 | 217 |
| T250-125 | 250 | 125 | 100 | 78 | 373 | 217 |
| T250-140 | 250 | 140 | 100 | 78 | 373 | 217 |
| T250-160 | 250 | 160 | 100 | 85 | 373 | 217 |
| T250-180 | 250 | 180 | 100 | 70 | 412 | 216 |
| T250-200 | 250 | 200 | 100 | 85 | 412 | 216 |
| T250-225 | 250 | 225 | 100 | 85 | 438 | 216 |
| T280-63 | 280 | 63 | 109 | 95 | 341 | 252 |
| T280-75 | 280 | 75 | 109 | 95 | 341 | 252 |
| T280-90 | 280 | 90 | 109 | 95 | 341 | 252 |
| T280-110 | 280 | 110 | 109 | 105 | 341 | 252 |
| T280-125 | 280 | 125 | 109 | 90 | 390 | 252 |
| T280-140 | 280 | 140 | 109 | 90 | 390 | 252 |
| T280-160 | 280 | 160 | 109 | 105 | 390 | 252 |
| T280-180 | 280 | 180 | 109 | 90 | 429 | 251 |
| T280-200 | 280 | 200 | 109 | 105 | 429 | 251 |
| T280-225 | 280 | 225 | 109 | 90 | 479 | 252 |
| T280-250 | 280 | 250 | 109 | 105 | 479 | 252 |
| T315-63 | 315 | 63 | 110 | 97 | 347 | 276 |
| T315-75 | 315 | 75 | 110 | 97 | 347 | 276 |
| T315-90 | 315 | 90 | 110 | 97 | 347 | 276 |
| T315-110 | 315 | 110 | 110 | 110 | 347 | 276 |
| T315-125 | 315 | 125 | 110 | 100 | 396 | 276 |
| T315-140 | 315 | 140 | 110 | 100 | 396 | 276 |
| T315-160 | 315 | 160 | 110 | 110 | 396 | 276 |
| T315-180 | 315 | 180 | 110 | 95 | 435 | 276 |
| T315-200 | 315 | 200 | 110 | 110 | 435 | 275 |
| T315-225 | 315 | 225 | 110 | 95 | 460 | 275 |
| T315-250 | 315 | 250 | 110 | 110 | 485 | 275 |
| T315-280 | 315 | 280 | 105 | 90 | 550 | 275 |
| T355-110 | 355 | 110 | 110 | 100 | 328 | 298 |
| T355-125 | 355 | 125 | 110 | 100 | 377 | 297 |
| T355-140 | 355 | 140 | 110 | 100 | 377 | 297 |
| T355-160 | 355 | 160 | 110 | 100 | 377 | 297 |
| T355-200 | 355 | 200 | 110 | 100 | 416 | 297 |
| T355-225 | 355 | 225 | 110 | 98 | 467 | 298 |
| T355-250 | 355 | 250 | 110 | 100 | 467 | 298 |
| T355-315 | 355 | 315 | 110 | 100 | 532 | 298 |
| T400-110 | 400 | 110 | 110 | 110 | 351 | 321 |
| T400-160 | 400 | 160 | 110 | 110 | 400 | 320 |
| T400-200 | 400 | 200 | 110 | 110 | 439 | 320 |
| T400-225 | 400 | 225 | 110 | 98 | 490 | 320 |
| T400-250 | 400 | 250 | 110 | 110 | 490 | 320 |
| T400-315 | 400 | 315 | 110 | 110 | 555 | 320 |
| T400-355 | 400 | 355 | 110 | 100 | 645 | 330 |

**Reducing Tee**

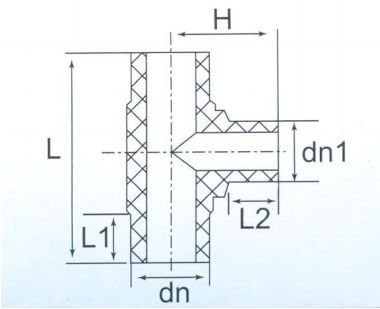


| Specification | dn | dn1 | L1 | L2 | L | H |
|---|---|---|---|---|---|---|
| T450-110 | 450 | 110 | 110 | 110 | 359 | 350 |
| T450-125 | 450 | 125 | 110 | 90 | 408 | 349 |
| T450-140 | 450 | 140 | 110 | 90 | 408 | 349 |
| T450-160 | 450 | 160 | 110 | 110 | 408 | 349 |
| T450-180 | 450 | 180 | 110 | 100 | 447 | 348 |
| T450-200 | 450 | 200 | 110 | 110 | 447 | 348 |
| T450-225 | 450 | 225 | 110 | 100 | 497 | 346 |
| T450-250 | 450 | 250 | 110 | 110 | 497 | 346 |
| T450-280 | 450 | 280 | 110 | 100 | 562 | 349 |
| T450-315 | 450 | 315 | 110 | 110 | 562 | 349 |
| T450-355 | 450 | 355 | 110 | 110 | 647 | 347 |
| T450-400 | 450 | 400 | 110 | 110 | 647 | 347 |
| T500-110 | 500 | 110 | 110 | 110 | 406 | 375 |
| T500-125 | 500 | 125 | 110 | 100 | 406 | 375 |
| T500-140 | 500 | 140 | 110 | 100 | 406 | 375 |
| T500-160 | 500 | 160 | 110 | 110 | 406 | 375 |
| T500-180 | 500 | 180 | 110 | 100 | 446 | 375 |
| T500-200 | 500 | 200 | 110 | 110 | 446 | 375 |
| T500-225 | 500 | 225 | 110 | 100 | 495 | 375 |
| T500-250 | 500 | 250 | 110 | 110 | 495 | 375 |
| T500-280 | 500 | 280 | 110 | 100 | 560 | 375 |
| T500-315 | 500 | 315 | 110 | 110 | 560 | 375 |
| T500-355 | 500 | 355 | 110 | 122 | 644 | 379 |
| T500-400 | 500 | 400 | 110 | 110 | 644 | 379 |
| T560-110 | 560 | 110 | 125 | 115 | 396 | 412 |
| T560-125 | 560 | 125 | 125 | 100 | 443 | 412 |
| T560-140 | 560 | 140 | 125 | 100 | 443 | 412 |
| T560-160 | 560 | 160 | 125 | 115 | 443 | 412 |
| T560-180 | 560 | 180 | 125 | 100 | 483 | 412 |
| T560-200 | 560 | 200 | 125 | 115 | 483 | 412 |
| T560-225 | 560 | 225 | 125 | 100 | 532 | 412 |
| T560-250 | 560 | 250 | 125 | 110 | 532 | 412 |
| T560-280 | 560 | 280 | 125 | 100 | 597 | 416 |
| T560-315 | 560 | 315 | 125 | 130 | 597 | 416 |
| T560-355 | 560 | 355 | 125 | 140 | 681 | 416 |
| T560-400 | 560 | 400 | 125 | 130 | 681 | 416 |
| T560-450 | 560 | 450 | 125 | | | |
| T560-500 | 560 | 500 | 125 | 130 | 780 | 426 |
| T630-90 | 630 | 90 | 130 | 105 | 404 | 447 |
| T630-110 | 630 | 110 | 130 | 110 | 404 | 447 |
| T630-125 | 630 | 125 | 130 | 107 | 454 | 447 |
| T630-140 | 630 | 140 | 130 | 107 | 454 | 447 |
| T630-160 | 630 | 160 | 130 | 115 | 454 | 447 |

## Reducing Tee

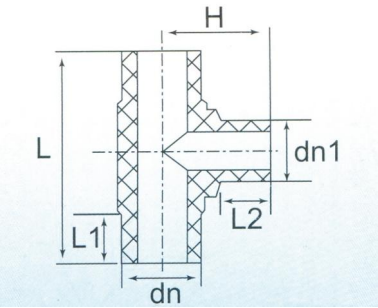


| Specification | dn | dn1 | L1 | L2 | L | H |
|---|---|---|---|---|---|---|
| T630-180 | 630 | 180 | 130 | 107 | 494 | 447 |
| T630-200 | 630 | 200 | 130 | 115 | 494 | 447 |
| T630-225 | 630 | 225 | 130 | 107 | 543 | 447 |
| T630-250 | 630 | 250 | 130 | 115 | 543 | 447 |
| T630-280 | 630 | 280 | 130 | 110 | 608 | 451 |
| T630-315 | 630 | 315 | 130 | 120 | 608 | 451 |
| T630-355 | 630 | 355 | 130 | 149 | 692 | 451 |
| T630-400 | 630 | 400 | 130 | 130 | 692 | 451 |
| T630-450 | 630 | 450 | 130 | 107 | 791 | 461 |
| T630-500 | 630 | 500 | 130 | 140 | 791 | 461 |
| T630-560 | 630 | 560 | | | | |
| T710-110 | 710 | 110 | 215 | 170 | 585 | 522 |
| T710-160 | 710 | 160 | 198 | 170 | 585 | 522 |
| T710-200 | 710 | 200 | 180 | 170 | 585 | 522 |
| T710-250 | 710 | 250 | 195 | 150 | 690 | 521 |
| T710-315 | 710 | 315 | 180 | 165 | 690 | 521 |
| T710-400 | 710 | 400 | 180 | 165 | 775 | 518 |
| T710-500 | 710 | 500 | 185 | 165 | 875 | 520 |
| T710-630 | 710 | 630 | 180 | 165 | 1008 | 525 |
| T800-110 | 800 | 110 | 240 | 170 | 615 | 572 |
| T800-160 | 800 | 160 | 210 | 170 | 615 | 572 |
| T800-200 | 800 | 200 | 196 | 170 | 615 | 572 |
| T800-250 | 800 | 250 | 205 | 170 | 730 | 572 |
| T800-315 | 800 | 315 | 205 | 170 | 730 | 572 |
| T800-400 | 800 | 400 | 200 | 170 | 815 | 579 |
| T800-500 | 800 | 500 | 185 | 170 | 910 | 572 |
| T800-630 | 800 | 630 | 197 | 171 | 1040 | 571 |

## Cross

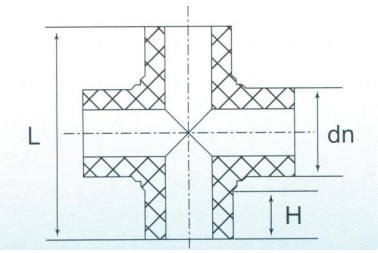


| Specification | dn | L | H |
|---|---|---|---|
| +63 | 63 | 200 | 65 |
| +75 | 75 | 222 | 70 |
| +90 | 90 | 255 | 75 |
| +110 | 110 | 279 | 75 |
| +160 | 160 | 329 | 80 |
| +200 | 200 | 379 | 83.5 |
| +225 | 225 | 415 | 90 |
| +250 | 250 | 461 | 100 |
| +315 | 315 | 543 | 110 |
| +400 | 400 | 645 | 110 |
| +500 | 500 | 748 | 110 |
| +710 | 710 | 1072 | 180 |
| +800 | 800 | 1202 | 185 |

## Stub End

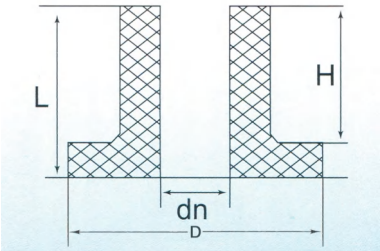


| Specification | dn | L | H | D |
|---|---|---|---|---|
| F63 | 63 | 87 | 74 | 96 |
| F75 | 75 | 93 | 78 | 113 |
| F90 | 90 | 101 | 84 | 122 |
| F110 | 110 | 109 | 92 | 140 |
| F125 | 125 | 108 | 91 | 158 |
| F140 | 140 | 123 | 107 | 172 |
| F160 | 160 | 119 | 99 | 200 |
| F180 | 180 | 129 | 107 | 222 |
| F200 | 200 | 128 | 105 | 243 |
| F225 | 225 | 127 | 102 | 274 |
| F250 | 250 | 134 | 107 | 310 |
| F280 | 280 | 160 | 130 | 334 |
| F315 | 315 | 166 | 133 | 370 |
| F355 | 355 | 157 | 123 | 407 |
| F400 | 400 | 180 | 140 | 473 |
| F450 | 450 | 176 | 140 | 515 |
| F500 | 500 | 196 | 151 | 576 |
| F560 | 560 | 210 | 160 | 635 |
| F630 | 630 | 210 | 160 | 690 |
| F710 | 710 | 215 | 165 | 807 |
| F800 | 800 | 230 | 175 | 885 |
| F900 | 900 | 215 | 160 | 995 |
| F1000 | 1000 | 240 | 180 | 1095 |
| F1200 | 1200 | 375 | 275 | 1320 |

## Flange Plate

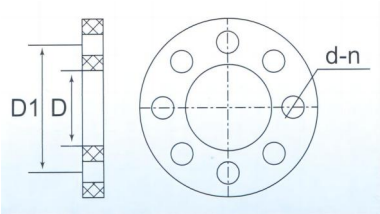


| Specification | dn | n | D | D1 |
|---|---|---|---|---|
| F63 | 18 | 4 | 66 | 123 |
| F75 | 18 | 4 | 78 | 143 |
| F90 | 18 | 8 | 96 | 158 |
| F110 | 18 | 8 | 116 | 178 |
| F125 | 18 | 8 | 133 | 208 |
| F140 | 18 | 8 | 146 | 238 |
| F160 | 23 | 8 | 168 | 238 |
| F180 | 23 | 8 | 185 | 238 |
| F200 | 23 | 8 | 210 | 293 |
| F225 | 23 | 8 | 230 | 293 |
| F250 | 23 | 12 | 260 | 350 |
| F280 | 23 | 12 | 290 | 350 |
| F315 | 23 | 12 | 328 | 400 |
| F355 | 23 | 16 | 365 | 460 |
| F400 | 25 | 16 | 415 | 515 |
| F450 | 25 | 20 | 465 | 565 |
| F500 | 25 | 20 | 515 | 620 |
| F560 | 30 | 20 | 570 | 725 |
| F630 | 30 | 20 | 645 | 725 |
| F710 | 30 | 24 | 725 | 840 |
| F800 | 35 | 24 | 825 | 950 |
| F900 | 35 | 28 | 925 | 1050 |
| F1000 | 35 | 28 | 1025 | 1160 |
| F1200 | 35 | 32 | 1225 | 1380 |

Cross Tee

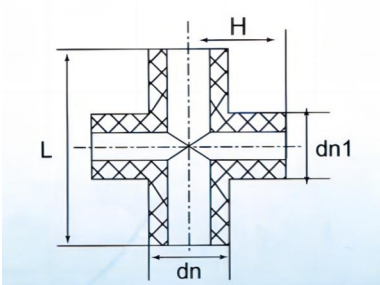


| Specification | dn | dn1 | L | L1/mm | L2/mm | H |
|---|---|---|---|---|---|---|
| +63-32 | 63 | 32 | 200 | 83 | 65 | 63 |
| +63-50 | 63 | 50 | 200 | 87.5 | 65 | 59 |
| +75-50 | 75 | 50 | 234 | 101 | 70 | 58 |
| +75-63 | 75 | 63 | 234 | 108 | 70 | 64 |
| +90-50 | 90 | 50 | 256 | 112 | 72 | 58 |
| +90-63 | 90 | 63 | 256 | 153 | 72 | 64 |
| +90-75 | 90 | 75 | 256 | 123 | 76 | 72 |
| +110-63 | 110 | 63 | 275 | 125 | 79 | 65 |
| +110-75 | 110 | 75 | 275 | 131 | 79 | 70 |
| +110-90 | 110 | 90 | 275 | 132 | 79 | 74 |
| +160-63 | 160 | 63 | 329 | 167 | 80 | 80 |
| +160-75 | 160 | 75 | 329 | 167 | 80 | 77 |
| +160-90 | 160 | 90 | 329 | 166 | 80 | 80 |
| +160-110 | 160 | 110 | 329 | 166 | 80 | 80 |
| +200-110 | 200 | 110 | 374 | 185 | 85 | 80 |
| +200-160 | 200 | 160 | 374 | 185 | 85 | 80 |
| +225-110 | 225 | 110 | 307 | 208 | 90 | 85 |
| +225-160 | 225 | 160 | 352 | 200 | 90 | 80 |
| +225-200 | 225 | 200 | 416 | 206 | 90 | 85 |
| +250-110 | 250 | 110 | 382 | 227 | 125 | 95 |
| +250-160 | 250 | 160 | 382 | 220 | 105 | 90 |
| +250-200 | 250 | 200 | 460 | 221 | 100 | 90 |
| +315-110 | 315 | 110 | 407 | 262 | 130 | 100 |
| +315-160 | 315 | 160 | 407 | 260 | 110 | 100 |
| +315-200 | 315 | 200 | 465 | 260 | 120 | 100 |
| +315-250 | 315 | 250 | 540 | 260 | 108 | 100 |
| +400-110 | 400 | 110 | 351 | 321 | 110 | 110 |
| +400-200 | 400 | 200 | 439 | 320 | 110 | 110 |
| +500-110 | 500 | 110 | 356 | 375 | 108 | 120 |
| +500-160 | 500 | 160 | 406 | 375 | 108 | 120 |
| +500-200 | 500 | 200 | 445 | 385 | 108 | 120 |
| +500-250 | 500 | 250 | 495 | 383 | 108 | 120 |
| +500-315 | 500 | 315 | 560 | 385 | 108 | 120 |
| +500-400 | 500 | 400 | 644 | 384 | 108 | 120 |
| +710-110 | 710 | 110 | 582 | 547 | 215 | 170 |
| +710-160 | 710 | 160 | 582 | 547 | 198 | 170 |
| +710-200 | 710 | 200 | 582 | 547 | 180 | 170 |
| +710-250 | 710 | 250 | 690 | 542 | 200 | 170 |
| +710-315 | 710 | 315 | 690 | 542 | 177 | 170 |
| +710-400 | 710 | 400 | 770 | 542 | 182 | 165 |
| +710-500 | 710 | 500 | 870 | 542 | 185 | 165 |
| +710-630 | 710 | 630 | 1003 | 542 | 180 | 165 |
| +800-110 | 800 | 110 | 615 | 572 | 240 | 170 |
| +800-160 | 800 | 160 | 615 | 572 | 217 | 170 |
| +800-200 | 800 | 200 | 615 | 572 | 196 | 170 |
| +800-250 | 800 | 250 | 730 | 572 | 220 | 170 |
| +800-315 | 800 | 315 | 730 | 572 | 200 | 170 |
| +800-400 | 800 | 400 | 815 | 572 | 200 | 170 |
| +800-500 | 800 | 500 | 910 | 572 | 190 | 170 |
| +800-630 | 800 | 630 | 1040 | 572 | 197 | 170 |

## Reducing Cross

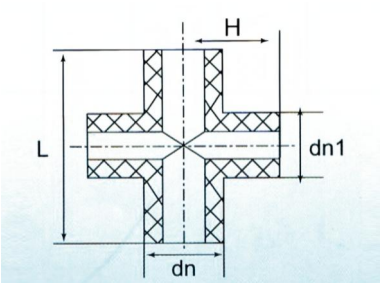


| Specification | dn | dn1 | L | L1/mm | L2/mm | H |
|---|---|---|---|---|---|---|
| +400-110 | 400 | 110 | 110 | 110 | 351 | 321 |
| +400-200 | 400 | 200 | 110 | 110 | 439 | 320 |
| +400-400 | 400 | 400 | 110 | 110 | 645 | 330 |
| +500-110 | 500 | 110 | 108 | 110 | 108 | 375 |
| +500-160 | 500 | 160 | 108 | 110 | 108 | 375 |
| +500-200 | 500 | 200 | 108 | 120 | 108 | 385 |
| +500-250 | 500 | 250 | 108 | 120 | 108 | 383 |
| +500-315 | 500 | 315 | 108 | 120 | 108 | 385 |
| +500-400 | 500 | 400 | 108 | 120 | 108 | 384 |
| +500-500 | 500 | 500 | 108 | 108 | 748 | 110 |
| +710-110 | 710 | 110 | 240 | 170 | 620 | 547 |
| +710-160 | 710 | 160 | 210 | 170 | 620 | 547 |
| +710-200 | 710 | 200 | 200 | 170 | 620 | 547 |
| +710-250 | 710 | 250 | 230 | 165 | 770 | 542 |
| +710-315 | 710 | 315 | 210 | 165 | 770 | 542 |
| +710-400 | 710 | 400 | 235 | 165 | 920 | 542 |
| +710-500 | 710 | 500 | 195 | 165 | 920 | 542 |
| +710-630 | 710 | 630 | 185 | 165 | 1008 | 542 |
| +800-110 | 800 | 110 | 240 | 170 | 620 | 593 |
| +800-160 | 800 | 160 | 210 | 170 | 620 | 593 |
| +800-200 | 800 | 200 | 200 | 170 | 620 | 593 |
| +800-250 | 800 | 250 | 230 | 170 | 770 | 593 |
| +800-315 | 800 | 315 | 210 | 170 | 770 | 593 |
| +800-400 | 800 | 400 | 250 | 170 | 920 | 593 |
| +800-500 | 800 | 500 | 200 | 170 | 920 | 593 |
| +800-630 | 800 | 630 | 200 | 170 | 1040 | 593 |

## Reducing Tee

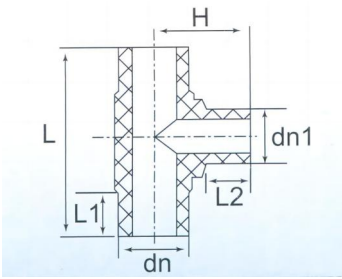


| Specification | dn | dn1 | L1 | L2 | L | H |
|---|---|---|---|---|---|---|
| T710-110 | 710 | 110 | 240 | 170 | 620 | 547 |
| T710-160 | 710 | 160 | 210 | 170 | 620 | 547 |
| T710-200 | 710 | 200 | 210 | 170 | 620 | 547 |
| T710-250 | 710 | 250 | 230 | 170 | 770 | 547 |
| T710-315 | 710 | 315 | 210 | 165 | 770 | 547 |
| T710-400 | 710 | 400 | 235 | 165 | 920 | 542 |
| T710-500 | 710 | 500 | 195 | 165 | 920 | 542 |
| T710-630 | 710 | 630 | 185 | 165 | 1008 | 542 |
| T800-110 | 800 | 110 | 240 | 170 | 620 | 593 |
| T800-160 | 800 | 160 | 210 | 170 | 620 | 593 |
| T800-200 | 800 | 200 | 210 | 170 | 620 | 593 |
| T800-250 | 800 | 250 | 230 | 170 | 770 | 593 |
| T800-315 | 800 | 315 | 210 | 170 | 770 | 593 |
| T800-400 | 800 | 400 | 250 | 170 | 920 | 593 |
| T800-500 | 800 | 500 | 200 | 170 | 920 | 593 |
| T800-630 | 800 | 630 | 200 | 170 | 1040 | 593 |

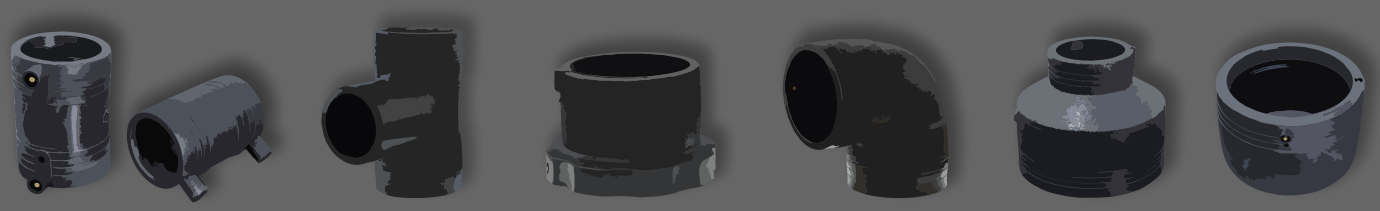

FUSINGX


**Hangzhou Welping Machinery Equipment Co., Ltd**

Phone: 00 86 571 82603031

E-mail: sales@xfusing.com  Web: www.xfusing.com

Office address: Room 1904 Building 1, Taifu Plaza, No. 1 Tonghui Middle Road, Xiaoshan District, Hangzhou

Factory address: No. 288 Jinyuan Road, Puyang Town, Xiaoshan District, Hangzhou, China