WELSON

We produce :

TUNGSTEN in

-aerospace and aviation

-medical

-synthetic sapphire

-oil drilling

-energy

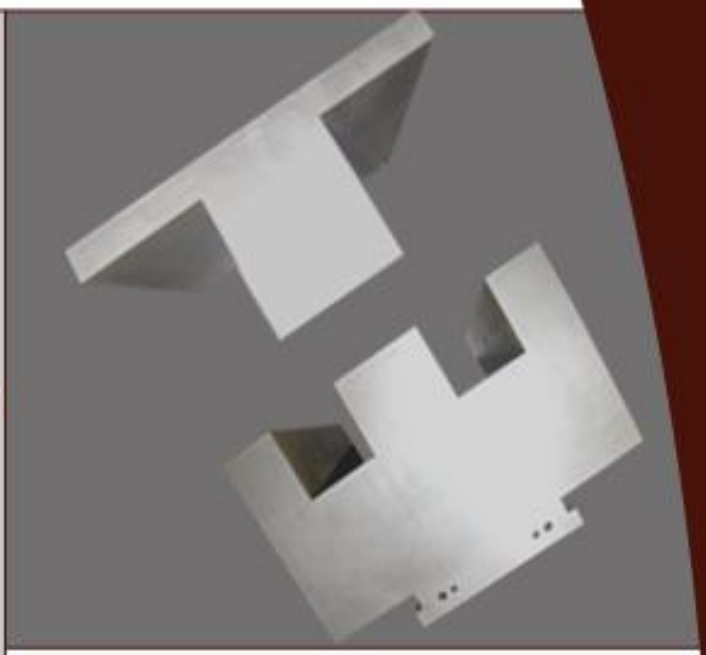

The most professional tungsten manufacture for versatile applications

WEISON ADVANCED MATERIALS turning powder into precision finishing around tungsten-oriented materials for nearly 20 years in powder metallurgy,which of all devoted to the following main fields including aerospace,aviation,sports, medical,machinery,electronics,mining,energy and so forth . our skilled technical staff who are able to offer advice on all aspects of the application of tungsten materials listed in above presentation.WEISON's innovative technology and sufficient production capacity take us penetrating into all walks of life.

WEISON

www.globaltungstens.com

Integrity Dedication Innovation

We focus our diligence on R&D,manufacture, sales and technical service base on tungsten materials for nearly 20 years and acquired extensive experience and expertise in the production of top quality tungsten materials.

Customer-orientation and attention to quality management are our major feature of company strong performance.our focus is to ensure the complete fulfillment of Customer's satisfaction.

WEISON ADVANCED MATERIALS have strong R&D and technological capacity, technicians account for 30% of staff.WEISON manufacture tungsten products is base on PM (powder metallurgy) combined with finely deep processing and innovative technology.

Diversified competence amassed over many years makes us be a reliable partner capable of finding optimal solutions to W materials and technology issue for each customer and get involved in constantly changing competitive market.

WELSON

www.globaltungstens.com

Powder metallurgy is the process of pressing and sintering .blending fine powdered materials, converting to desired shape or form by compaction in rigid dies using various types of compacting presses.and then heating the compressed materials under protective atmosphere in sintering furnaces.imparting special required properties with post sintering operations.

Why tungsten use PM

Powder metallurgy technology is the main production process of refractory metal especially tungsten and its alloy. Powder metallurgy allows us to produce materials well with melting points over 2000℃.The tungsten powder is mixed with the possible alloy elements and then filled into molds.The mixture is then compressed at pressures of up to 2 000 barye. The resulting compacted workpiece (also known as a "green compact") is then sintered in special furnaces.During this process, the parts acquires its high density ,and its homogeneous micro structure forms.

WELSON

www.globaltungstens.com

Top deep processing

Tungsten rod

Name: 99.95% or 99.99% pure Tungsten Rods

Appearance: silver grey metal luster

Purity: W ⩾99.95%

Density: not less than 19.2 g/cm^3

Supply state: annealing or processing

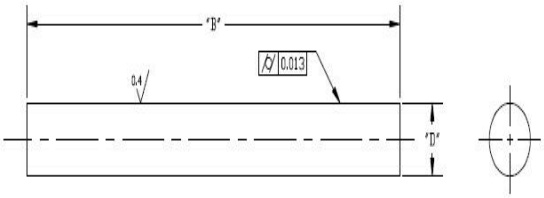

Type and Size

Tungsten content	Type	Diameter (mm)	Diameter tol (mm)	Length (mm)	Length tol (mm)	Liner rate
99.95% min	Sintering Rod	Φ 40-100	± 3	<500	± 5	± 5%
	Forged Rod	Φ 20-80	± 2	<800	± 5	± 2%
	Ground Rod	Φ 2-60	± 0.1	<650	± 1	± 0.5%

Application

- Suitable for producing ion implantation parts
- For producing electric light source parts and electric vacuum components
- For producing heating elements and refractory parts in high temperature furnaces
  Used as electrodes in the field of rare earth metal industry

WELSON

www.globaltungstens.com

Tungsten bar

Name: pure Tungsten square bar

Grade: W-1 W-2 W-3 W-4

Appearance:silver grey metallic luster

W-2: (10-16)×(10-16)×(≥300)mm

W-1/W-4: (10-16)×(10-16)×(≥30)mm

Purity:W≥99.95% or W≥99.9%

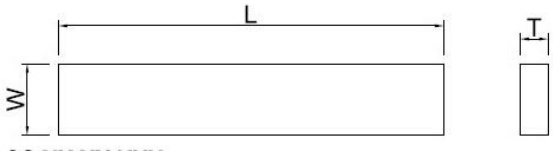

Description		Code	W content by the substractive method	Density g/cm3	Applications	Dimensions mm
Tungsten bars	Pure tungsten	TW-2	≥99.95	≥17.5	For swaging W rods and contacts	(10-16)×(10-16)×(≥300)mm
	Tungsten bars for drawing wire	TW-2.1	≥99		For drawing wire,stirring purposes in rare earth smelting	
	Tungsten bars for steel smelting	TW-1 TW-4	≥99.95 ≥99.9		High purity W bars for steel smelting and to alloys additives.industrial class pure W bars for steel smelting.	----

WELSON

www.globaltungstens.com

Customized as you will

Tungsten boat

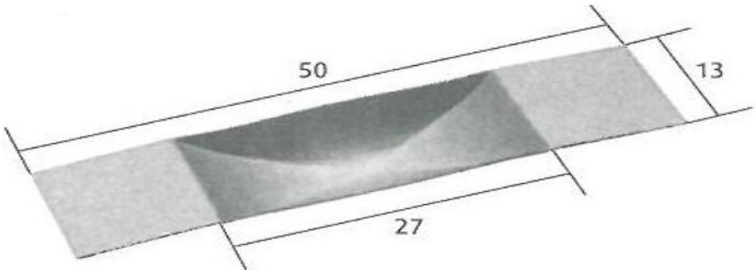

Type	Thickness	Length	Width	L 1	Depth
M-310	0.3	100	10	60	1.5-2.0
M-215	0.2	100	15	60	1.5-2.0
M-315	0.3	100	15	60	1.5-2.0
M-515	0.5	100	15	60	1.5-2.0
M-218	0.2	100	8	60	1.5-2.0
M-312	0.3	100	12	60	1.5-2.0
M-251	0.2	50	10	25	1.5-2.0
M-353	0.3	50	13	25	1.5-2.0
M-220	0.2	102	15	40	5.0
M-223	0.2	100	23	15	1.5-2.0

Application

Made with the rolling tungsten plate which density is not less than 19 g/cm3, *tungsten boats* have a square appearance, level bottom and accurate size.is mainly used in metallurgical industry, machinery processing, glass and ceramic industries, as well as containers for coating materials, such as high melting point metal molding sintering or making quartz glass, etc.

WELSON

www.globaltungstens.com

Tungsten wire

Name: pure tungsten straight wire or twisted wire

Purity:tungsten content ≥99.9%

Specific electrical:0.055 ohm×mm^2 /m resistance at 20℃

Modulus of elasticity:410 KN/mm^2 at 20℃

Applications: For producing electric light source parts and electric vacuum components For producing heating elements and refractory parts in high temperature furnaces For producing heating elements used in vacuum metalizing or plating

Appearance: W-wire is regular black covered with graphite. After graphite is removed it is metallic luster.

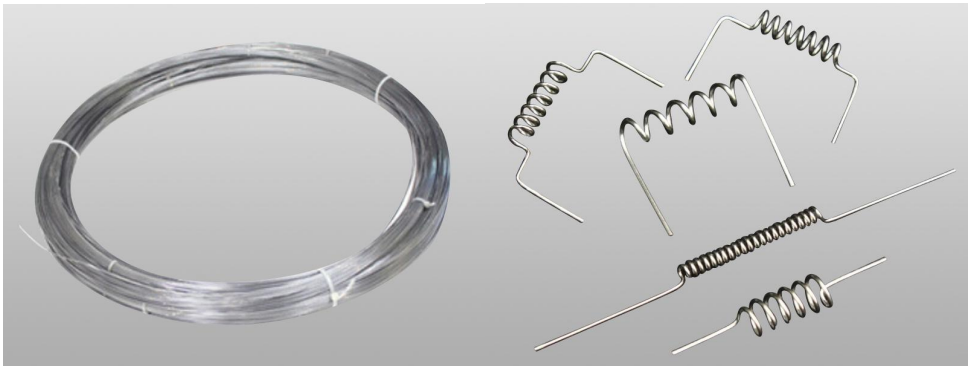

Chemical Composition:

Gr	Tungsten Content	Impurity Elements Content	
		Total	Each
WAL 1, WAL 2	≥99.95%	≤0.05%	≤0.01%
W 1	≥99.95%	≤0.05%	≤0.01%
W 2	≥99.92%	≤0.08%	≤0.01%
Note: Potassium is not counted in impurities content.			

WELSON

www.globaltungstens.com

Ultra-high temperature

Diameter tolerance(%):

Diameter (μm)	Weight (mg/200 mm)	Weight(mg/200 mm) Tolerance(%)			Diameter Tolerance(%)		
		Grade 0	Grade 1	Grade 2	Grade 0	Grade 1	Grade 2
5≤d≤12	0.075~0.44	—	±4	±5	—	—	—
12<d≤18< td="">	>0.44~0.98	—	±3	±4	—	—	—
18<d≤40< td="">	>0.98~4.85	±2	±2.5	±3	—	—	—
40<d≤80< td="">	>4.85~19.39	±1.5	±2.0	±2.5	—	—	—
80<d≤300< td="">	>19.39~272.71	±1.0	±1.5	±2.0	—	—	—
300<d≤350<	>272.71~371.79	—	±1.0	±1.5	—	—	—
350<d≤500<	—	—			±1.5	±2.0	±2.5
500<d≤1800<	—	—			±1.0	±1.5	±2.0

Tungsten wire is widely used in making

Kinds of filaments of incandescent lamps

Fluorescent lamps and halogen lamps.it's

Also suitable for making electrode for HID

Lamps and TIG,different fever components

Of furnace,heater for vacuum plating,laser

Discharge components,photocopier electrode

WELSON

www.globaltungstens.com

Tungsten sheet/plate/borehole plate

Purity: W ≥ 99.95%;

Density: ≥ 19.0 g/cm^3;

Flatness: ≤ 2%;

Standard: GB/T 3875-83 or ASTM B 760-86

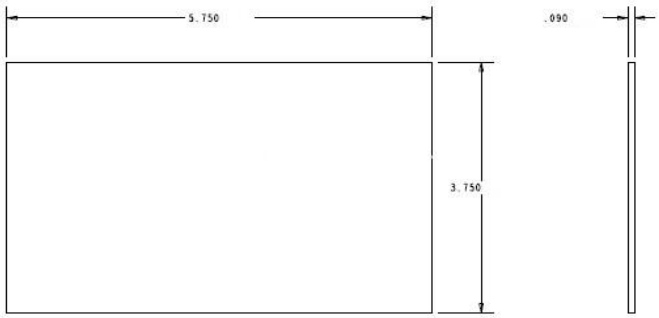

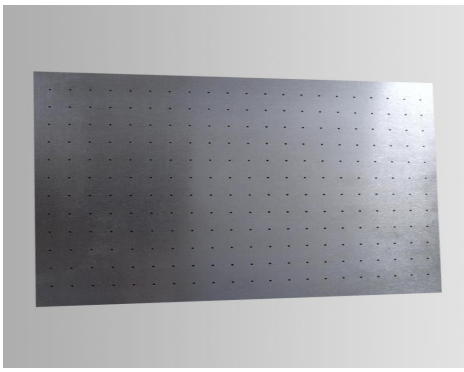

Application

- Suitable for producing ion implantation parts
- For producing electric light source parts,components of electric vacuum
- For producing W-boats,heat shield and heat bodies in high temperature furnace
- Used for tungsten sputtering target
- used in reflection *shield*, cover plate applied in the sapphire growth furnace

WELSON

www.globaltungstens.com

From W powder to formation

Thickness	Thickness tolerance	Width	Width tolerance	Length	Length tolerance	Delivery condition
0.1	±0.02	10-250	±2	500	±2	Cold rolled
0.2	±0.03	10-250	±2	500	±2	Cold rolled
0.3	±0.04	10-250	±2	500	±2	Cold rolled
0.4	±0.05	10-250	±2	500	±2	Cold rolled
0.5	±0.06	10-250	±2	500	±2	Cold rolled
0.6	±0.07	10-250	±2	500	±2	Cold rolled
0.7	±0.08	10-250	±2	500	±2	Cold rolled
0.8	±0.08	10-250	±2	500	±2	Cold rolled
0.9	±0.08	10-250	±2	500	±2	Cold rolled
1.0	±0.12	10-250	±0.5	600	±0.5	Cold rolled
1.5	±0.12	10-400	±0.5	600	±0.5	Cold rolled
2.0	±0.12	10-500	±0.5	700	±0.5	Cold rolled
3.0	±0.20	10-500	±0.5	700	±0.5	Hot rolled
4.0	±0.30	10-500	±0.5	700	±0.5	Hot rolled
5.0	±0.40	10-550	±0.5	700	±0.5	Hot rolled
6.0	±0.50	10-550	±0.5	700	±0.5	Hot rolled
7.0	±0.50	10-550	±0.5	700	±0.5	Hot rolled
8.0	±0.50	10-550	±0.5	700	±0.5	Hot rolled
9.0	±0.50	10-550	±0.5	700	±0.5	Hot rolled
10.0	±0.50	10-550	±0.5	700	±0.5	Hot rolled
11.0	±0.50	10-550	±0.5	700	±0.5	Hot rolled
12.0	±0.50	10-550	±0.5	700	±0.5	Hot rolled
13.0	±0.50	10-550	±0.5	700	±0.5	Hot rolled
14.0	±0.50	10-550	±0.5	700	±0.5	Hot rolled
15.0	±0.50	10-550	±0.5	700	±0.5	Hot rolled

WELSON

www.globaltungstens.com

Tungsten target

Appearance: Silver white metal luster

Purity: W≥99.95%

Density: not less than 19.2 g/cm3

Supply state: Surface polishing, CNC machine processing

Quality standards: GB/T 3875-2006 (*tungsten plate*)

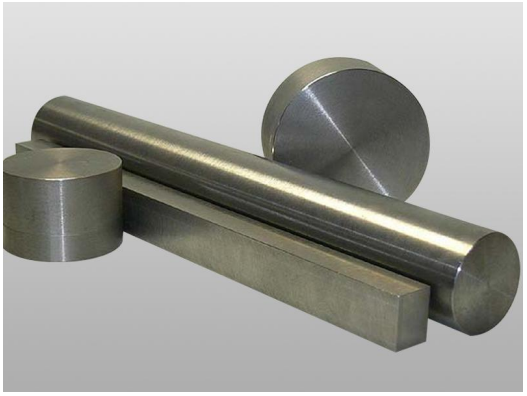

Specifications of Tungsten targets

Unit： mm

	Thickness	Width	Length	Parallelism	Verticality	Surface finish
Tungsten target	8.0-16.0	10~450	10-500	<0.05	< 2°	<Ra 0.8
	3.0-8.0	10~450	10-800	<0.05	< 2°	<Ra 0.8
	1.0-3.0	10~450	10-1200	<0.05	< 2°	<Ra 0.8

Our team will help you

find an optima

WELSON

www.globaltungstens.com

Optimal solution

Tungsten sputtering targets:

Due to the tungsten element can resistant to high temperature and corrosion.tungsten sputtering targets(W sputtering target; wolfram block, W block) mainly apply to semiconductor industry, flat displays(TFT-LCD), thin film solar, coating glass industry (including architectural glass, automotive glass, optical film glass etc.), surface engineering (decorative and toolings), magneto-optical recording media, micro-electronics, automotive lighting, and decorative coating.etc.

We can offer high purity planar targets and rotating targets with fine grain size for you based on your requirements.

WELSON

www.globaltungstens.com

Tungsten crucible

Naming: pure tungsten crucible

Purity: W ≥ 99.95%

Density: ≥ 18.2 g/cm3 sintering technique

≥ 19.2 g/cm3 forging technique

Appearance:silver grey metal luster

Surface: lathe ,ground

Application temperature environment: 2500 ℃

Thermal expansion coefficient(0-1600 ℃):4.98 × 10^{-6}

Vapor pressure:2100 ℃ at 10^{-6} Pa

Supporting emerging

Tungsten source

Tungsten crucible specification

diameter (mm)	thickness (mm)	height (mm)	Surface finish	inner surface finish	Inner bottom finish
30 ~ 50	2 ~ 10	<500	<Ra 2.0	<Ra 2.4	<Ra 2.8
50 ~ 100	3 ~ 15	<1000	<Ra 2.0	<Ra 2.4	<Ra 2.8
100 ~ 150	3 ~ 15	<1000	<Ra 2.0	<Ra 2.4	<Ra 2.8
150 ~ 200	5 ~ 20	<1000	<Ra 2.0	<Ra 2.4	<Ra 2.8
200 ~ 300	8 ~ 20	<1000	<Ra 2.0	<Ra 2.4	<Ra 2.8
300 ~ 400	8 ~ 30	<1000	<Ra 2.0	<Ra 2.4	<Ra 2.8
400 ~ 450	8 ~ 30	<1000	<Ra 2.0	<Ra 2.4	<Ra 2.8
450 ~ 600	8 ~ 30	<1000	<Ra 2.0	<Ra 2.4	<Ra 2.8

WELSON

www.globaltungstens.com

Emerging tungsten source

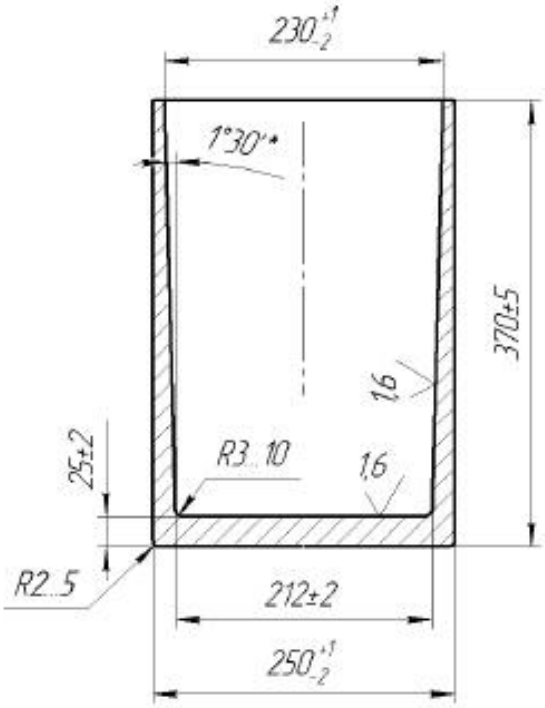

Tungsten crucible applications:

Since the temperature in working environment of tungsten crucible is above 2000℃, it commonly used for sapphire single crystal growth furnace;

Applied for quartz glass melting furnace;

Used for rare earth smelting furnace;

Used for sintering metal mold of high melting point;

Tungsten crucible is also widely used in other following industries:ceramics and metallurgical industries, machinery processing and light industries.

WELSON

www.globaltungstens.com

Tungsten granule

Naming: pure tungsten granule

W≥99.95%

Appearance:Bright gray polyhedron granule.

Code :LW

Mesh Size:-1180 μm+850 μm(-16~+20)

-850 μm+425 μm(-20~+40)

-425 μm+250 μm(-40~+60)

-250 μm+180 μm(-60~+80)

Outward appearance:bright grey polyhedral granulates

Analysis:Oversize≤5%,Undersize≤7% Carbon,Sulfur and Oxygen

Contents:C≤0.001% S≤0.0007% O≤0.05

Application:Tungsten granule (W granule; wolfram granule; wolfram particle; W particle) is used as flux in the analysis of carbon and sulfur.

WELSON
www.globaltungstens.com

Tungsten shot

A large quantity of tungsten shot with many different kinds of sizes in stock.

Specification:
Regular shot size:2.0mm,2.2mm,2.5mm,2.75mm,3.0mm,3.3mm
Density:18.0-18.5g/c
Composition:W-Ni-Fe, W content 90-97%
Surface state:high grinding surface; with satellite
Tolerance:+/-0.02mm or even greater precision

Tungsten shot is matured product in our company.It is completely round shape,with or without strict tolerance both available.they can used for hunting as gunshot or other aspects.
Tungsten alloy shot is used as the shot for shooting.
The pellets spread upon leaving the barrel,and the power of the burning charge is divided among the pellets,which means that the energy of any one ball of shot is fairly low.
Tungsten alloy shot is used as the shot for hunting.
The pellets make shotguns useful primarily for hunting birds and other small games.
We can produce high performance tungsten shot by strengthen material itself,achieve ultra-high strength tungsten shot as per different customers' requirements.Details welcome to contact us at convenience.

WELSON

www.globaltungstens.com

Tungsten radiation shielding

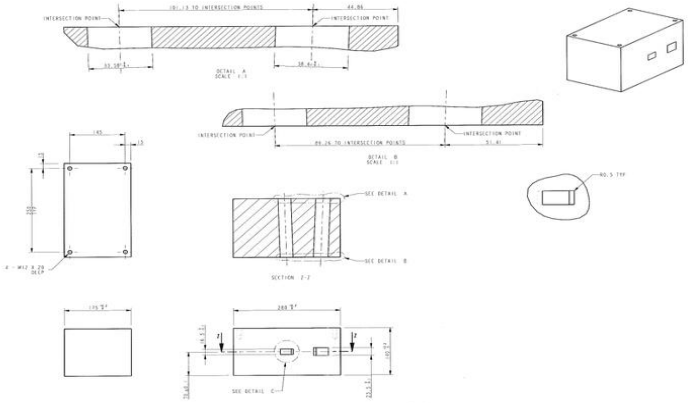

Typical properties of tungsten heavy alloy materials

AMS-T-21014

Class	Nominal Tungsten	Density	Tensile strength	Elongation	Compact force	Hardness
	Weight%	g/cc	Mpa	%	j/cd	HRC
1	90WNiFe/Cu	17.15±0.15	700-1200	20-30	⩾130	24-32
2	92.5WNiFe/Cu	17.6±0.15	700-140	15-25	⩾50	25-30
3	95WNiFe/Cu	18.0±0.15	700-1200	8-15	⩾30	25-35
4	97WNiFe/Cu	18.5±0.15	600-1000	8-14	⩾10	30-35

Strategic resource

Tungsten alloy radiation shielding include following applications:

Geologging

Geologging is an exploration technique used mainly in the oil and gas industries. It is also known as wire line logging and borehole logging. A gamma ray source is lowered into a borehole and the radiation penetrates the rock strata. This data can then be analyzed to determine whether deposits of gas or oil are present. Tungsten alloy is used to shield the radioactive source and acts as a collimator for the gamma beam.

Pipeline Inspection Gamma

Radiation is used to inspect welds and to detect cracks in pipelines. A gamma source is mounted on a remote-controlled wheeled trolley (sometimes called a "pig") and travels inside the length of the pipe. Tungsten collimator is used to direct the radiation onto the target, whilst the radioactive source is housed inside tungsten shielding.

Industrial Radiography

Industrial radiography uses gamma radiation to detect structural faults in materials such as metal and concrete. As with pipeline inspection, the equipment uses tungsten shielding, coupled with a tungsten collimator.

Thickness, density and level gauging radioactive sources are used in industrial processes to measure thickness, density or levels of materials during production e.g. paper, plastic film, steel sheet or surface coatings. The material passes between a radioactive source, which is housed in tungsten alloy, and a detector. The strength of the detector signal is used to measure the thickness, density or level of the material.

Homeland Security and Border Control

The penetrating power of radiation has also been put to use in the fight against terrorism. The Homeland Security industry has designed scanners that use gamma radiation to detect objects in cargo containers or airline baggage.

The radioactive sources are very strong and require tungsten shielding to protect security staff and members of the public from the radiation. A tungsten collimator is also required to direct the gamma radiation onto its target.

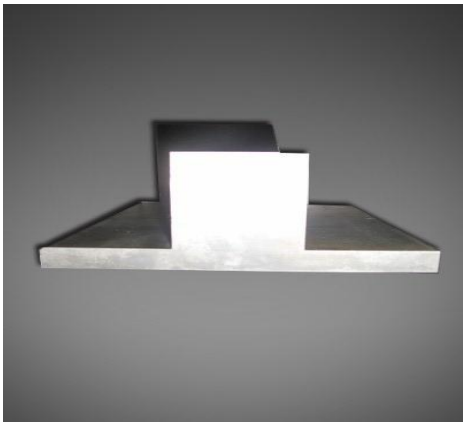

WELSON

www.globaltungstens.com

WC

Tungsten carbide

Tungsten carbide (chemical formula:WC)is an alloy material that made of hard metal compound of refractory metal and bonding metal through powder metallurgy technology to accomplish.it's of high hardness,good wear resistance、 strength and toughness , as well as excellent anti-heating and corrosion,especially for its high hardness and wear resistance, even under 500 ℃ tungsten carbide remain about the same.and still keep high hardness under 1000 ℃ .In its most basic form, tungsten carbide is a fine gray powder, but it can be pressed and formed into shapes for use in industrial machinery, cutting tools, abrasives, armor-piercing rounds, other tools and instruments, and jewelry.

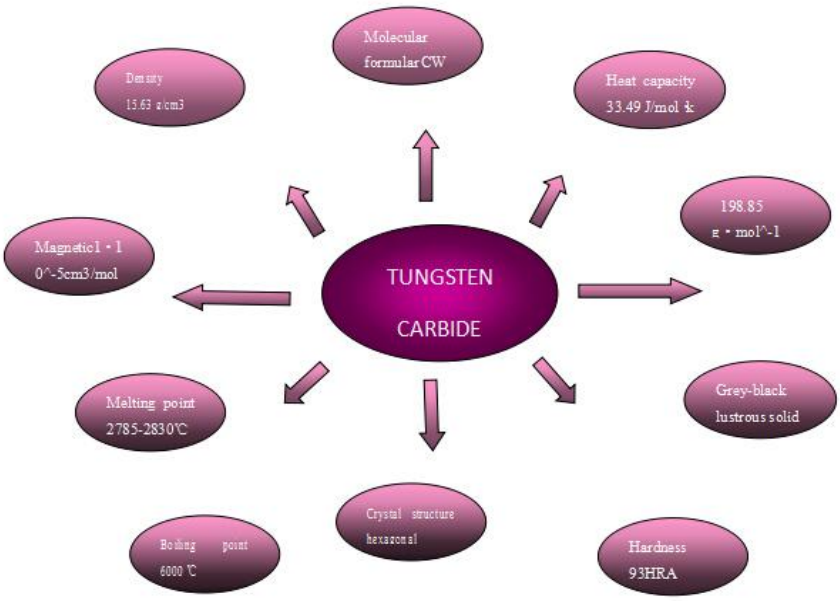

WEISION is a modernized high-tech enterprise with professional development and have been continuously tunneling along carbide material properties. Along the way ,have supplied nearly all kind of finished and semi-finished tungsten carbide products in the cemented carbide sector.

Our strong-point products in cemented carbide sector as following

1) Tools&Parts:carbide strips,rods,plates ,inserts ,discs and tips

2) Moulds: drawing dies,cold-forging dies,punching dies,heading dies

3)Precision-machined parts: Carbide difficulty parts with complex profile to be formed or high precision tolerance to be ground

WELSON

www.globaltungstens.com

Tungsten carbide ball

Tungsten carbide ball also called cemented carbide ball, it made of WC and binder phase Co or Ni,they are sintered into blanks after pressing.sintered blank often have band like satellite, we will make precision machining for high ground as per customer's different demand. In addition , we use complete virgin WC material with our creative production technology lead to high performance tungsten carbide ball.

The Features of Tungsten Carbide Balls

Tungsten carbide balls with high hardness, wear resistance, rusty free and anti bending features, which are available to replace of steel balls in any working condition.Usually, they are produced with grade YG6 with hardness as HRA91.0 and density at 14.9g/cm3

***Content, Mechanical and Physical Performance of Tungsten Carbide Ball with Grade YG6**

WC:94%

CO： 6%

Density:14.9g/cm3

Hardness:HRA91.0

Ultimate Compressive Strength:4600~5800 Mpa

Young's Modulus:650Gpa

Specific Heat:225 J/kg-K

Coefficient of Linear Thermal Expansion:5.2 10^-6/°C

Thermal Conductivity:83.0 W/(m·K)

Electric Resistivity:180 Ω *m*10^-9

Specification:diameter from 0.3mm--100mm

Application of tungsten carbide ball

The tungsten carbide balls are widely used in different areas, such as precision bearings,instruments,meters,pend production, spraying machines, water pumps, machinery accessories, sealing valves, brake pumps,oil deposits, hydrochloric acid laboratory, hardness testers,fishings,weighting blocks,ornaments,and precision machining etc top industries.

Tungsten Carbide Ball Categories

The tungsten carbide balls are mainly composited with micron class carbide article powders such as WC, TiC with high hardness, and refractory performances, and binders phase like Co, Ni or Mo,by means of sintering in vacuum or hydrogen reduction furnace. Now the common grades to produce tungsten carbide ball are YG, YN, YT and YW etc.

WELSON

www.globaltungstens.com

Engineering traditions

Tungsten carbide bar and strip

GRADE	ISO CODE	CO. CONTENT	DENSITY	HARDNESS	TRS
		(%)	g/cm3	HRA	N/mm2
K10T	K05-K10	4.5-6.0	14.95-15.05	92.7	1800
YG8	K30	8	14.80	89.5	2200
YG6	K20	6	14.95	90.5	1900
YG6X	K10	6	14.95	91.5	1800
YL10.2	K30	10	14.50	91.8	2400
YG13X	K30-K40	13	14.30	89.5	2600
YG15	K40	15	14.00	87.5	2800

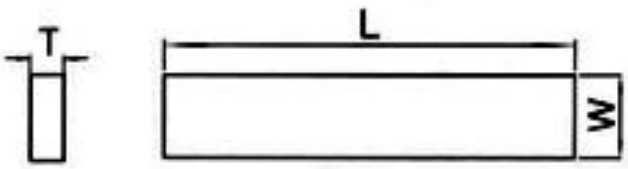

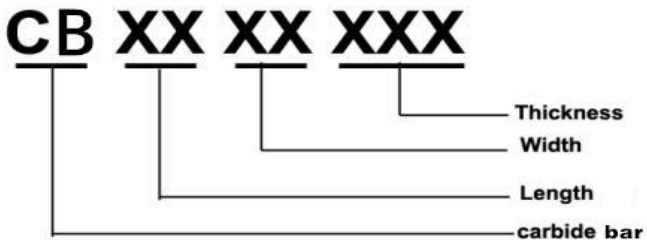

WELSON

www.globaltungstens.com

Engineering traditions

Tungsten carbide bar and strip

Specification (unit:mm)

TYPE	ITEM No.	L	W	T	Flatness Tol
140×W×T	CB1400615	140	6	1.5	<0.35
140×W×T	CB1400815	140	8	1.5	<0.35
140×W×T	CB1401015	140	10	1.5	<0.35
140×W×T	CB1401215	140	12	1.5	<0.35
140×W×T	CB1401415	140	14	1.5	<0.35
140×W×T	CB1401615	140	16	1.5	<0.35
140×W×T	CB1401815	140	18	1.5	<0.35
140×W×T	CB1402015	140	20	1.5	<0.35
140×W×T	CB1402215	140	22	1.5	<0.35
140×W×T	CB1402515	140	25	1.5	<0.35
140×W×T	CB1400620	140	6	2.0	<0.35
140×W×T	CB1400820	140	8	2.0	<0.35
140×W×T	CB1401020	140	10	2.0	<0.35
140×W×T	CB1401220	140	12	2.0	<0.35
140×W×T	CB1401420	140	14	2.0	<0.35
140×W×T	CB1401620	140	16	2.0	<0.35
140×W×T	CB1401820	140	18	2.0	<0.35
140×W×T	CB1402020	140	20	2.0	<0.35
140×W×T	CB1402220	140	22	2.0	<0.35
140×W×T	CB1402520	140	25	2.0	<0.35
140×W×T	CB1400630	140	6	3.0	<0.35
140×W×T	CB1400830	140	8	3.0	<0.35
140×W×T	CB1401030	140	10	3.0	<0.35
140×W×T	CB1401230	140	12	3.0	<0.35
140×W×T	CB1401430	140	14	3.0	<0.35
140×W×T	CB1401630	140	16	3.0	<0.35
140×W×T	CB1401830	140	18	3.0	<0.35
140×W×T	CB1402030	140	20	3.0	<0.35
140×W×T	CB1402230	140	22	3.0	<0.35
140×W×T	CB1402530	140	25	3.0	<0.35
140×W×T	CB1400640	140	6	4.0	<0.35
140×W×T	CB1400840	140	8	4.0	<0.35
140×W×T	CB1401040	140	10	4.0	<0.35
140×W×T	CB1401240	140	12	4.0	<0.35
140×W×T	CB1401440	140	14	4.0	<0.35

WELSON

www.globaltungstens.com

Engineering traditions

Tungsten carbide bar and strip

Specification (unit:mm)

TYPE	ITEM No.	L	W	T	Flatness Tol
140×W×T	CB1401640	140	16	4.0	＜0.35
140×W×T	CB1401840	140	18	4.0	＜0.35
140×W×T	CB1402040	140	20	4.0	＜0.35
140×W×T	CB1402240	140	22	4.0	＜0.35
140×W×T	CB1402540	140	25	4.0	＜0.35
140×W×T	CB1400650	140	6	5.0	＜0.35
140×W×T	CB1400850	140	8	5.0	＜0.35
140×W×T	CB1401050	140	10	5.0	＜0.35
140×W×T	CB1401250	140	12	5.0	＜0.35
140×W×T	CB1401450	140	14	5.0	＜0.35
140×W×T	CB1401650	140	16	5.0	＜0.35
140×W×T	CB1401850	140	18	5.0	＜0.35
140×W×T	CB1402050	140	20	5.0	＜0.35
140×W×T	CB1402250	140	22	5.0	＜0.35
140×W×T	CB1402550	140	25	5.0	＜0.35
140×W×T	CB1400660	140	6	6.0	＜0.35
140×W×T	CB1400860	140	8	6.0	＜0.35
140×W×T	CB1401060	140	10	6.0	＜0.35
140×W×T	CB1401260	140	12	6.0	＜0.35
140×W×T	CB1401460	140	14	6.0	＜0.35
140×W×T	CB1401660	140	16	6.0	＜0.35
140×W×T	CB1401860	140	18	6.0	＜0.35
140×W×T	CB1402060	140	20	6.0	＜0.35
140×W×T	CB1402260	140	22	6.0	＜0.35
140×W×T	CB1402560	140	25	6.0	＜0.35
140×W×T	CBXXXXXXX	...	...	...	...

WELSON

www.globaltungstens.com

Engineering traditions

Tungsten carbide bar and strip

Specification (unit:mm)

TYPE	ITEM No.	L	W	T	Flatness Tol
165×W×T	CB1650615	165	6	1.5	<0.35
165×W×T	CB1650815	165	8	1.5	<0.35
165×W×T	CB1651015	165	10	1.5	<0.35
165×W×T	CB1651215	165	12	1.5	<0.35
165×W×T	CB1651415	165	14	1.5	<0.35
165×W×T	CB1651615	165	16	1.5	<0.35
165×W×T	CB1651815	165	18	1.5	<0.35
165×W×T	CB1652015	165	20	1.5	<0.35
165×W×T	CB1652215	165	22	1.5	<0.35
165×W×T	CB1652515	165	25	1.5	<0.35
165×W×T	CB1650620	165	6	2.0	<0.35
165×W×T	CB1650820	165	8	2.0	<0.35
165×W×T	CB1651020	165	10	2.0	<0.35
165×W×T	CB1651220	165	12	2.0	<0.35
165×W×T	CB1651420	165	14	2.0	<0.35
165×W×T	CB1651620	165	16	2.0	<0.35
165×W×T	CB1651820	165	18	2.0	<0.35
165×W×T	CB1652020	165	20	2.0	<0.35
165×W×T	CB1652220	165	22	2.0	<0.35
165×W×T	CB1652520	165	25	2.0	<0.35
165×W×T	CB1650630	165	6	3.0	<0.35
165×W×T	CB1650830	165	8	3.0	<0.35
165×W×T	CB1651030	165	10	3.0	<0.35
165×W×T	CB1651230	165	12	3.0	<0.35
165×W×T	CB1651430	165	14	3.0	<0.35
165×W×T	CB1651630	165	16	3.0	<0.35
165×W×T	CB1651830	165	18	3.0	<0.35
165×W×T	CB1652030	165	20	3.0	<0.35
165×W×T	CB1652230	165	22	3.0	<0.35
165×W×T	CB1652530	165	25	3.0	<0.35
165×W×T	CB1650640	165	6	4.0	<0.35
165×W×T	CB1650840	165	8	4.0	<0.35
165×W×T	CB1651040	165	10	4.0	<0.35
165×W×T	CB1651240	165	12	4.0	<0.35
165×W×T	CB1651440	165	14	4.0	<0.35

WELSON

www.globaltungstens.com

Engineering traditions

Tungsten carbide bar and strip

Specification (unit:mm)

TYPE	ITEM No.	L	W	T	Flatness Tol
165×W×T	CB1651540	165	16	4.0	＜0.35
165×W×T	CB1651840	165	18	4.0	＜0.35
165×W×T	CB1652040	165	20	4.0	＜0.35
165×W×T	CB1652240	165	22	4.0	＜0.35
165×W×T	CB1652540	165	25	4.0	＜0.35
165×W×T	CB1650650	165	6	5.0	＜0.35
165×W×T	CB1650850	165	8	5.0	＜0.35
165×W×T	CB1651050	165	10	5.0	＜0.35
165×W×T	CB1651250	165	12	5.0	＜0.35
165×W×T	CB1651450	165	14	5.0	＜0.35
165×W×T	CB1651650	165	16	5.0	＜0.35
165×W×T	CB1651850	165	18	5.0	＜0.35
165×W×T	CB1652050	165	20	5.0	＜0.35
165×W×T	CB1652250	165	22	5.0	＜0.35
165×W×T	CB1652550	165	25	5.0	＜0.35
165×W×T	CB1650660	165	6	6.0	＜0.35
165×W×T	CB1650860	165	8	6.0	＜0.35
165×W×T	CB1651060	165	10	6.0	＜0.35
165×W×T	CB1651260	165	12	6.0	＜0.35
165×W×T	CB1650140	165	14	6.0	＜0.35
165×W×T	CB1651660	165	16	6.0	＜0.35
165×W×T	CB1651860	165	18	6.0	＜0.35
165×W×T	CB1652060	165	20	6.0	＜0.35
165×W×T	CB1652260	165	22	6.0	＜0.35
165×W×T	CB1652560	165	25	6.0	＜0.35
165×W×T	CBXXXXXXX	...	...	...	...

WELSON

www.globaltungstens.com

Engineering traditions

Tungsten carbide bar and strip

Specification (unit:mm)

TYPE	ITEM No.	L	W	T	Flatness Tol
230×W×T	CB2300820	230	8	2.0	<0.35
230×W×T	CB2301020	230	10	2.0	<0.35
230×W×T	CB2301220	230	12	2.0	<0.35
230×W×T	CB2301420	230	14	2.0	<0.35
230×W×T	CB2301620	230	16	2.0	<0.35
230×W×T	CB2301820	230	18	2.0	<0.35
230×W×T	CB2302020	230	20	2.0	<0.35
230×W×T	CB2302220	230	22	2.0	<0.35
230×W×T	CB2302520	230	25	2.0	<0.35
230×W×T	CB2303020	230	30	2.0	<0.35
230×W×T	CB2300825	230	8	2.5	<0.35
230×W×T	CB2301025	230	10	2.5	<0.35
230×W×T	CB2301225	230	12	2.5	<0.35
230×W×T	CB2301425	230	14	2.5	<0.35
230×W×T	CB2301625	230	16	2.5	<0.35
230×W×T	CB2301825	230	18	2.5	<0.35
230×W×T	CB2302025	230	20	2.5	<0.35
230×W×T	CB2302225	230	22	2.5	<0.35
230×W×T	CB2302525	230	25	2.5	<0.35
230×W×T	CB2303025	230	30	2.5	<0.35
230×W×T	CB2300830	230	8	3.0	<0.35
230×W×T	CB2301030	230	10	3.0	<0.35
230×W×T	CB2301230	230	12	3.0	<0.35
230×W×T	CB2301430	230	14	3.0	<0.35
230×W×T	CB2301630	230	16	3.0	<0.35
230×W×T	CB2301830	230	18	3.0	<0.35
230×W×T	CB2302030	230	20	3.0	<0.35
230×W×T	CB2302230	230	22	3.0	<0.35
230×W×T	CB2302530	230	25	3.0	<0.35
230×W×T	CB2303030	230	30	3.0	<0.35
230×W×T	CB2300840	230	8	4.0	<0.35
230×W×T	CB2301040	230	10	4.0	<0.35
230×W×T	CB2301240	230	12	4.0	<0.35
230×W×T	CB2301440	230	14	4.0	<0.35
230×W×T	CB2301640	230	16	4.0	<0.35

WELSON

www.globaltungstens.com

Engineering traditions

Tungsten carbide bar and strip

Specification (unit:mm)

TYPE	ITEM No.	L	W	T	Flatness Tol
230×W×T	CB2301840	230	18	4.0	＜0.35
230×W×T	CB2302040	230	20	4.0	＜0.35
230×W×T	CB2302240	230	22	4.0	＜0.35
230×W×T	CB2302540	230	25	4.0	＜0.35
230×W×T	CB2303040	230	30	4.0	＜0.35
230×W×T	CB2300850	230	8	5.0	＜0.35
230×W×T	CB2301050	230	10	5.0	＜0.35
230×W×T	CB2301250	230	12	5.0	＜0.35
230×W×T	CB2301450	230	14	5.0	＜0.35
230×W×T	CB2301650	230	16	5.0	＜0.35
230×W×T	CB2301850	230	18	5.0	＜0.35
230×W×T	CB2302050	230	20	5.0	＜0.35
230×W×T	CB2302250	230	22	5.0	＜0.35
230×W×T	CB2302550	230	25	5.0	＜0.35
230×W×T	CB2303050	230	30	5.0	＜0.35
230×W×T	CB2300860	230	8	6.0	＜0.35
230×W×T	CB2301060	230	10	6.0	＜0.35
230×W×T	CB2301260	230	12	6.0	＜0.35
230×W×T	CB2301460	230	14	6.0	＜0.35
230×W×T	CB2301660	230	16	6.0	＜0.35
230×W×T	CB2301860	230	18	6.0	＜0.35
230×W×T	CB2302060	230	20	6.0	＜0.35
230×W×T	CB2302260	230	22	6.0	＜0.35
230×W×T	CB2302560	230	25	6.0	＜0.35
230×W×T	CB2303060	230	30	6.0	＜0.35
230×W×T	CBXXXXXXX	...	...	...	...

WELSON

www.globaltungstens.com

Engineering traditions

Tungsten carbide bar and strip

Specification (unit:mm)

TYPE	ITEM No.	L	W	T	Flatness Tol
320×W×T	CB3201020	320	10	2.0	<0.35
320×W×T	CB3201220	320	12	2.0	<0.35
320×W×T	CB3201420	320	14	2.0	<0.35
320×W×T	CB3201620	320	16	2.0	<0.35
320×W×T	CB3201820	320	18	2.0	<0.35
320×W×T	CB3202020	320	20	2.0	<0.35
320×W×T	CB3202220	320	22	2.0	<0.35
320×W×T	CB3202520	320	25	2.0	<0.35
320×W×T	CB3203020	320	30	2.0	<0.35
320×W×T	CB3201025	320	10	2.5	<0.35
320×W×T	CB3201225	320	12	2.5	<0.35
320×W×T	CB3201425	320	14	2.5	<0.35
320×W×T	CB3201625	320	16	2.5	<0.35
320×W×T	CB3201825	320	18	2.5	<0.35
320×W×T	CB3202025	320	20	2.5	<0.35
320×W×T	CB3202225	320	22	2.5	<0.35
320×W×T	CB3202525	320	25	2.5	<0.35
320×W×T	CB3203025	320	30	2.5	<0.35
320×W×T	CB3201030	320	10	3.0	<0.35
320×W×T	CB3201230	320	12	3.0	<0.35
320×W×T	CB3201430	320	14	3.0	<0.35
320×W×T	CB3201630	320	16	3.0	<0.35
320×W×T	CB3201830	320	18	3.0	<0.35
320×W×T	CB3202030	320	20	3.0	<0.35
320×W×T	CB3202230	320	22	3.0	<0.35
320×W×T	CB3202530	320	25	3.0	<0.35
320×W×T	CB3203030	320	30	3.0	<0.35
320×W×T	CB3201040	320	10	4.0	<0.35
320×W×T	CB3201240	320	12	4.0	<0.35
320×W×T	CB3201440	320	14	4.0	<0.35
320×W×T	CB3201640	320	16	4.0	<0.35
320×W×T	CB3201840	320	18	4.0	<0.35
320×W×T	CB3202040	320	20	4.0	<0.35
320×W×T	CB3202240	320	22	4.0	<0.35
320×W×T	CB3202540	320	25	4.0	<0.35

WELSON

www.globaltungstens.com

Engineering traditions

Tungsten carbide bar and strip

Specification (unit:mm)

TYPE	ITEM No.	L	W	T	Flatness Tol
320×W×T	CB3203040	320	30	4.0	<0.35
320×W×T	CB3201050	320	10	5.0	<0.35
320×W×T	CB3201250	320	12	5.0	<0.35
320×W×T	CB3201450	320	14	5.0	<0.35
320×W×T	CB3201650	320	16	5.0	<0.35
320×W×T	CB3201850	320	18	5.0	<0.35
320×W×T	CB3202050	320	20	5.0	<0.35
320×W×T	CB3202250	320	22	5.0	<0.35
320×W×T	CB3202550	320	25	5.0	<0.35
320×W×T	CB3203050	320	30	5.0	<0.35
320×W×T	CB3201060	320	10	6.0	<0.35
320×W×T	CB3201260	320	12	6.0	<0.35
320×W×T	CB3201460	320	14	6.0	<0.35
320×W×T	CB3201660	320	16	6.0	<0.35
320×W×T	CB3201860	320	18	6.0	<0.35
320×W×T	CB3202060	320	20	6.0	<0.35
320×W×T	CB3202260	320	22	6.0	<0.35
320×W×T	CB3202560	320	25	6.0	<0.35
320×W×T	CB3203060	320	30	6.0	<0.35
320×W×T	CBXXXXXXX	...	...	...	...

WELSON

www.globaltungstens.com

Sustainable development

Tungsten carbide rod

Precision ground carbide rod

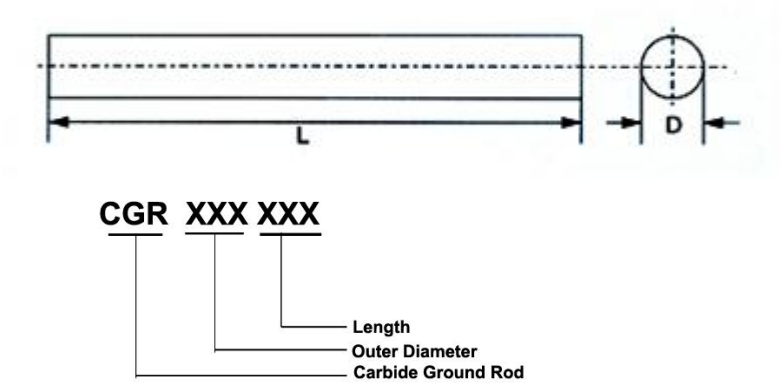

Item No.	Outer Diameter (mm)	Tolerance h 6 (mm)	Length (mm)	Tol (mm)
CGR005310	Φ0.5	+0/-0.006	310	-0/+0.01
CGR010310	Φ1.0	+0/-0.006	310	-0/+0.01
CGR012310	Φ1.2	+0/-0.006	310	-0/+0.01
CGR016310	Φ1.6	+0/-0.006	310	-0/+0.01
CGR018310	Φ1.8	+0/-0.006	310	-0/+0.01
CGR023310	Φ2.3	+0/-0.006	310	-0/+0.01
CGR025310	Φ2.5	+0/-0.006	310	-0/+0.01
CGR030310	Φ3.0	+0/-0.006	310	-0/+0.01
CGR035310	Φ3.5	+0/-0.008	310	-0/+0.01
CGR040310	Φ4.0	+0/-0.008	310	-0/+0.01
CGR045310	Φ4.5	+0/-0.008	310	-0/+0.01
CGR050310	Φ5.0	+0/-0.008	310	-0/+0.01
CGR055310	Φ5.5	+0/-0.008	310	-0/+0.01
CGR060310	Φ6.0	+0/-0.008	310	-0/+0.01
CGR065310	Φ6.5	+0/-0.009	310	-0/+0.01

WELSON

www.globaltungstens.com

Sustainable development

Tungsten carbide rod

Precision ground carbide rod

Item No.	Outer Diameter (mm)	Tolerance h 6 (mm)	Length (mm)	Tol (mm)
CR0700330	Φ7.0	+0/-0.009	310	-0/+0.01
CGR075310	Φ7.5	+0/-0.009	310	-0/+0.01
CGR080310	Φ8.0	+0/-0.009	310	-0/+0.01
CGR085310	Φ8.5	+0/-0.009	310	-0/+0.01
CGR090310	Φ9.0	+0/-0.009	310	-0/+0.01
CGR095310	Φ9.5	+0/-0.009	310	-0/+0.01
CGR100310	Φ10.0	+0/-0.009	310	-0/+0.01
CGR105310	Φ10.5	+0/-0.011	310	-0/+0.01
CGR110310	Φ11.0	+0/-0.011	310	-0/+0.01
CGR115310	Φ11.5	+0/-0.011	310	-0/+0.01
CGR120310	Φ12.0	+0/-0.011	310	-0/+0.01
CGR125310	Φ12.5	+0/-0.011	310	-0/+0.01
CGR130310	Φ13.0	+0/-0.011	310	-0/+0.01
CGR135310	Φ13.5	+0/-0.011	310	-0/+0.01
CGR140310	Φ14.0	+0/-0.011	310	-0/+0.01
CGR145310	Φ14.5	+0/-0.011	310	-0/+0.01
CGR150310	Φ15.0	+0/-0.011	310	-0/+0.01
CGR155310	Φ15.5	+0/-0.011	310	-0/+0.01
CGR160310	Φ16.0	+0/-0.011	310	-0/+0.01
CGR165310	Φ16.5	+0/-0.011	310	-0/+0.01
CGR170310	Φ17.0	+0/-0.011	310	-0/+0.01
CGR175310	Φ17.5	+0/-0.011	310	-0/+0.01
CGR180310	Φ18.0	+0/-0.011	310	-0/+0.01
CGR185310	Φ18.5	+0/-0.013	310	-0/+0.01
CGR190310	Φ19.0	+0/-0.013	310	-0/+0.01
CGR195310	Φ19.5	+0/-0.013	310	-0/+0.01
CGR200310	Φ20.0	+0/-0.013	310	-0/+0.01
CGR210310	Φ21.0	+0/-0.013	310	-0/+0.01
CGR220310	Φ22.0	+0/-0.013	310	-0/+0.01
CGR230310	Φ23.0	+0/-0.013	310	-0/+0.01
CGR240310	Φ24.0	+0/-0.013	310	-0/+0.01
CGR250310	Φ 25.0	+0/-0.013	310	-0/+0.01
CGR260310	Φ26.0	+0/-0.013	310	-0/+0.01
CGR270310	Φ27.0	+0/-0.013	310	-0/+0.01

WELSON

www.globaltungstens.com

Sustainable development

Tungsten carbide rod

Precision ground carbide rod

Item No.	Outer Diameter (mm)	Tolerance h 6 (mm)	Length (mm)	Tol (mm)
CGR280310	Φ28.0	+0/-0.013	310	-0/+0.01
CGR 290310	Φ29.0	+0/-0.013	310	-0/+0.01
CGR 300310	Φ30.0	+0/-0.013	310	-0/+0.01
CGR 310310	Φ31.0	+0/-0.016	310	-0/+0.01
CGR 320310	Φ32.0	+0/-0.016	310	-0/+0.01
CGR 330310	Φ33.0	+0/-0.016	310	-0/+0.01
CGR 340310	Φ34.0	+0/-0.016	310	-0/+0.01
CGR 350310	Φ35.0	+0/-0.016	310	-0/+0.01
CGR 360310	Φ36.0	+0/-0.016	310	-0/+0.01
CGR 370310	Φ37.0	+0/-0.016	310	-0/+0.01
CGR 380310	Φ38.0	+0/-0.016	310	-0/+0.01
CGR 390310	Φ39.0	+0/-0.016	310	-0/+0.01
CGR 400310	Φ40.0	+0/-0.016	310	-0/+0.01
CRXXXXXX	...	...	...	...

Delicate quality&Gorgeous Bring to you

WELSON

www.globaltungstens.com

Sustainable development

Tungsten carbide rod

Sintered rod with central one straight hole

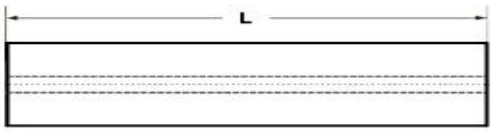

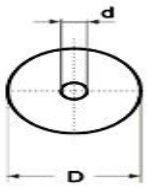

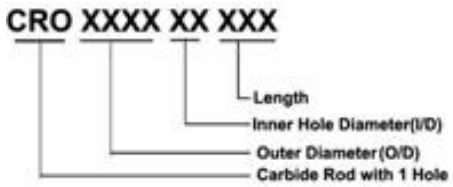

Item No.	O/D (mm)	Tol (mm)	I/D (mm)	Tol (mm)	Max Concentricity (mm)	Length (mm)	Tol (mm)
CRO02500333	Φ2.5	-0/+0.5	0.3	±0.10	0.2	330	-0/+5.0
CRO04001033	Φ4.0	-0/+0.5	1.0	±0.15	0.2	330	-0/+5.0
CRO06001033	Φ6.0	-0/+0.5	1.0	±0.15	0.2	330	-0/+5.0
CRO08001533	Φ8.0	-0/+0.5	1.5	±0.15	0.2	330	-0/+5.0
CRO10002033	Φ10.0	-0/+0.5	2.0	±0.20	0.25	330	-0/+5.0
CRO12002033	Φ12.0	-0/+0.5	2.0	±0.20	0.25	330	-0/+5.0
CRO14002033	Φ14.0	-0/+0.5	2.0	±0.20	0.25	330	-0/+5.0
CRO16002033	Φ16.0	-0/+0.5	2.0	±0.20	0.25	330	-0/+5.0
CRO18003033	Φ18.0	-0/+0.5	3.0	±0.25	0.3	330	-0/+5.0
CRO20003033	Φ20.0	-0/+0.5	3.0	±0.25	0.3	330	-0/+5.0
CRO22003033	Φ22.0	-0/+0.5	3.0	±0.25	0.3	330	-0/+5.0
CRO24004033	Φ24.0	-0/+0.5	4.0	±0.30	0.3	330	-0/+5.0
CRO26005033	Φ26.0	-0/+0.5	5.0	±0.35	0.3	330	-0/+5.0
CRO28005033	Φ28.0	-0/+0.5	5.0	±0.35	0.3	330	-0/+5.0
CRO30005033	Φ30.0	-0/+0.5	5.0	±0.35	0.5	330	-0/+5.0
CRO31005033	Φ31.0	-0/+0.5	5.0	±0.35	0.5	330	-0/+5.0
CRO32005033	Φ32.0	-0/+0.5	5.0	±0.35	0.5	330	-0/+5.0
CROXXXXX	...	...	...	...	...	...	...

WELSON

www.globaltungstens.com

Sustainable development

Tungsten carbide rod

Sintered rods with 2 straight coolant holes

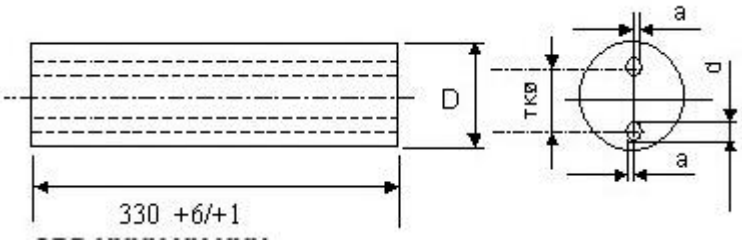

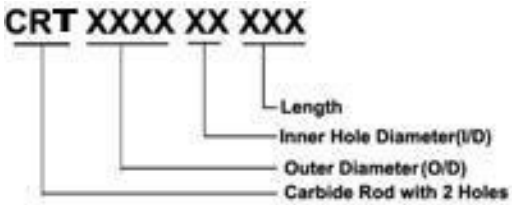

Item No.	O/D (mm)	Tol (mm)	I/D (mm)	Tol (mm)	TK (mm)	Tol (mm)	a (mm)
CRT042008330	Φ4.2	+0.3/-0	0.8	±0.1	1.8	-0.15	0.1
CRT052008330	Φ5.2	+0.3/-0	0.8	±0.1	2.0	-0.15	0.13
CRT063010330	Φ6.3	+0.3/-0	1.0	±0.1	3.0	-0.2	0.15
CRT073010330	Φ7.3	+0.3/-0	1.0	±0.15	3.5	-0.2	0.15
CRT083010330	Φ8.3	+0.3/-0	1.0	±0.15	4.0	-0.3	0.15
CRT093014330	Φ9.3	+0.3/-0	1.4	±0.15	4.0	-0.3	0.2
CRT103014330	Φ10.3	+0.3/-0	1.4	±0.15	5.0	-0.3	0.2
CRT113014330	Φ11.3	+0.4/-0	1.4	±0.15	5.0	-0.3	0.28
CRT123017533	Φ12.3	+0.4/-0	1.75	±0.15	6.0	-0.3	0.3
CRT133017533	Φ13.3	+0.4/-0	1.75	±0.15	6.0	-0.3	0.34
CRT143017533	Φ14.3	+0.4/-0	1.75	±0.15	7.0	-0.3	0.37
CRT153020330	Φ15.3	+0.4/-0	2.0	±0.2	7.0	-0.3	0.4
CRT163020330	Φ16.3	+0.4/-0	2.0	±0.2	8.0	-0.3	0.4
CRT173020330	Φ17.3	+0.4/-0	2.0	±0.2	8.0	-0.3	0.47
CRT183020330	Φ18.3	+0.5/-0	2.0	±0.2	9.0	-0.3	0.5
CRT193020330	Φ19.3	+0.5/-0	2.0	±0.2	9.0	-0.4	0.5
CRT204025330	Φ20.4	+0.5/-0	2.5	±0.25	10.0	-0.4	0.5
CRT214025330	Φ21.4	+0.5/-0	2.5	±0.25	10.0	-0.4	0.5
CRT224025330	Φ22.4	+0.5/-0	2.5	±0.25	11.0	-0.4	0.5
CRT234025330	Φ23.4	+0.5/-0	2.5	±0.25	11.0	-0.4	0.5
CRT244030330	Φ24.4	+0.5/-0	3.0	±0.25	12.0	-0.5	0.5
CRT254030330	Φ25.4	+0.5/-0	3.0	±0.25	12.0	-0.5	0.5
CRT264030330	Φ26.4	+0.5/-0	3.0	±0.25	13.0	-0.5	0.5

Tungsten carbide rod

Unground carbide rod

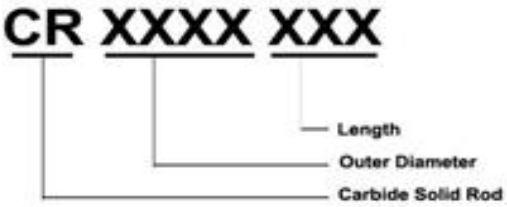

Item No.	Outer Diameter (mm)	Tol (mm)	Max Run-out (mm)	Length (mm)	Tol (mm)
CR0050330	Φ0.5	+0.20/+0.	0.2	330	-0/+5.0
CR0100330	Φ1.0	+0.20/+0.	0.2	330	-0/+5.0
CR0120330	Φ1.2	+0.20/+0.	0.2	330	-0/+5.0
CR0160330	Φ1.6	+0.20/+0.	0.2	330	-0/+5.0
CR0180330	Φ1.8	+0.20/+0.	0.2	330	-0/+5.0
CR0230330	Φ2.3	+0.20/+0.	0.2	330	-0/+5.0
CR0250330	Φ2.5	+0.20/+0.	0.2	330	-0/+5.0
CR0300330	Φ3.0	+0.20/+0.	0.2	330	-0/+5.0
CR0350330	Φ3.5	+0.20/+0.	0.2	330	-0/+5.0
CR0400330	Φ4.0	+0.20/+0.	0.2	330	-0/+5.0
CR0450330	Φ4.5	+0.20/+0.	0.2	330	-0/+5.0
CR0500330	Φ5.0	+0.20/+0.	0.2	330	-0/+5.0
CR0550330	Φ5.5	+0.20/+0.	0.2	330	-0/+5.0
CR0600330	Φ6.0	+0.20/+0.	0.2	330	-0/+5.0
CR0650330	Φ6.5	+0.20/+0.	0.2	330	-0/+5.0
CR0700330	Φ7.0	+0.20/+0.	0.2	330	-0/+5.0
CR0750330	Φ7.5	+0.20/+0.	0.2	330	-0/+5.0
CR08050330	Φ8.0	+0.20/+0.	0.2	330	-0/+5.0
CR0850330	Φ8.5	+0.20/+0.	0.25	330	-0/+5.0
CR0900330	Φ9.0	+0.20/+0.	0.25	330	-0/+5.0
CR0950330	Φ9.5	+0.20/+0.	0.25	330	-0/+5.0

Tungsten carbide rod

Unground carbide rod

Item No.	Outer Diameter (mm)	Tol (mm)	Max Run-out (mm)	Length (mm)	Tol (mm)
CR1000330	Φ 10.0	+0.20/+0.	0.25	330	-0/+5.0
CR1050330	Φ 10.5	+0.20/+0.	0.25	330	-0/+5.0
CR1100330	Φ 11.0	+0.20/+0.	0.25	330	-0/+5.0
CR1150330	Φ 11.5	+0.20/+0.	0.25	330	-0/+5.0
CR1200330	Φ 12.0	+0.20/+0.	0.25	330	-0/+5.0
CR1250330	Φ 12.5	+0.20/+0.	0.25	330	-0/+5.0
CR1300330	Φ 13.0	+0.20/+0.	0.25	330	-0/+5.0
CR1350330	Φ 13.5	+0.20/+0.	0.25	330	-0/+5.0
CR1400330	Φ 14.0	+0.20/+0.	0.25	330	-0/+5.0
CR1450330	Φ 14.5	+0.20/+0.	0.25	330	-0/+5.0
CR1500330	Φ 15.0	+0.20/+0.	0.25	330	-0/+5.0
CR15505330	Φ 15.5	+0.20/+0.	0.25	330	-0/+5.0
CR1600330	Φ 16.0	+0.20/+0.	0.25	330	-0/+5.0
CR1650330	Φ 16.5	+0.20/+0.	0.30	330	-0/+5.0
CR1700330	Φ 17.0	+0.20/+0.	0.30	330	-0/+5.0
CR1750330	Φ 17.5	+0.20/+0.	0.30	330	-0/+5.0
CR1800330	Φ 18.0	+0.20/+0.	0.30	330	-0/+5.0
CR1850330	Φ 18.5	+0.20/+0.	0.30	330	-0/+5.0
CR1900330	Φ 19.0	+0.20/+0.	0.30	330	-0/+5.0
CR1950330	Φ 19.5	+0.20/+0.	0.30	330	-0/+5.0
CR2000330	Φ 20.0	+0.20/+0.	0.30	330	-0/+5.0
CR2100330	Φ 21.0	+0.20/+0.	0.30	330	-0/+5.0
CR2200330	Φ 22.0	+0.20/+0.	0.30	330	-0/+5.0
CR2300330	Φ 23.0	+0.20/+0.	0.30	330	-0/+5.0
CR2400330	Φ 24.0	+0.20/+0.	0.30	330	-0/+5.0
CR2600330	Φ 26.0	+0.20/+0.	0.30	330	-0/+5.0
CR2700330	Φ 27.0	+0.20/+0.	0.35	330	-0/+5.0
CR2800330	Φ 28.0	+0.20/+0.	0.35	330	-0/+5.0
CR2900330	Φ 29.0	+0.20/+0.	0.35	330	-0/+5.0
CR3000330	Φ 30.0	+0.20/+0.	0.35	330	-0/+5.0
CR3100330	Φ 31.0	+0.20/+0.	0.50	330	-0/+5.0
CR3200330	Φ 32.0	+0.20/+0.	0.50	330	-0/+5.0
CR3300330	Φ 33.0	+0.20/+0.	0.50	330	-0/+5.0
CR3400330	Φ 34.0	+0.20/+0.	0.50	330	-0/+5.0

Tungsten carbide rod

Unground carbide rod

Item No.	Outer Diameter (mm)	Tol (mm)	Max Run-out (mm)	Length (mm)	Tol (mm)
CR3500330	Φ 35.0	+0.20/+0.	0.50	330	-0/+5.0
CR3600330	Φ 36.0	+0.20/+0.	0.50	330	-0/+5.0
CR3700330	Φ 37.0	+0.20/+0.	0.50	330	-0/+5.0
CR3800330	Φ 38.0	+0.20/+0.	0.50	330	-0/+5.0
CR3900330	Φ 39.0	+0.20/+0.	0.50	330	-0/+5.0
CR4000330	Φ 40.0	+0.20/+0.	0.50	330	-0/+5.0
CRXXXXXXX	...	...	...	...	...

*Unground Carbide Rod
*Precision Ground Carbide Rod
*Sintered Rod With Central One Straight Hole
*Sintered rods with 2 Straight Coolant Holes

Other sizes are available as per customers' requirements

Tungsten Carbide Grit

Tungsten carbide grit is in the process of crushing to achieve variety of specifications of WC granule with excellent raw materials as well, is an excellent hard-facing wear resistant materials, widely used on the surface of those who produce severe wear, friendly protect workpiece, increase its efficiency and extend lifespam. The tungsten carbide pellets will produce an extremely aggressive cutting or grinding surface, increase the wear life of hardfacing deposits.

Tungsten Carbide Granulate Application:
Woodwaste: tub grinders; horizontal grinders; shredders; chippers; debarkers; stump grinders;
Agriculture: sweeps; rippers; tillers;
Wear parts: tips; fixed hammers; swing hammers; flails; teeth & inserts;
Plows attachment: blades buckets for backhoes & excavators; loaders; milling attachments; Dragline buckets; grapplers; snow removal equipment; trencher teeth horizontal directional drilling; graders;
Drilling: hard banding; tubulars; drill pipe; drill collars; pup joints;
*Crushed Tungsten Carbide Grit for all the Hard-Facing Applications .

The carbide grit adopt tungsten carbide anvil as raw material , anti-high temperation, anti-corrosion and wearproof, no impurities, great welding effects, grade YG8 92% WC and 8% Cobalt is medium grain cemented carbide particles, not only good compressive resistance but also excellent tensile strength.
Hardness (HRA)⩾90， Tensile strength⩾2020

Features
- High purity
- Low crushing rate
- High hardness
- High toughness
- Super abrasive resistance
- High temperature resistance
- Extra layer of protection
- Increase efficiency

Typical abrasion resistant carbide granule YG8:

Grade	ISO	DENSITY	TRS	HARDNESS	APPLICATION
YG8	K20	⩾14.8	⩾2020	⩾90	Used for wear resistant parts

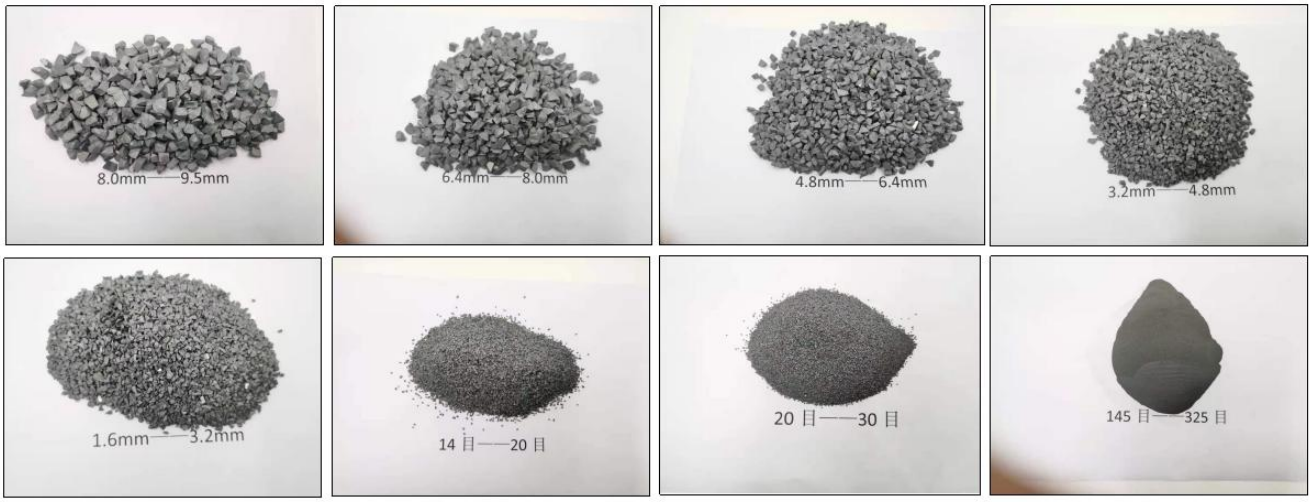

Customized available ; by different grade ;
by different grain size.

Tungsten Carbide Composite Rod

Highly wear resistant tungsten carbide composite rod is also called tungsten carbide brazing rod , cemented carbide composite rod, tungsten carbide electrode and composite rod welding, made of tungsten carbide containing cobalt the hardness is HRA 89-91 , which is naturally crushed. The particles with the same size are selected and mixed with the matrix alloy containing elastic copper, nickel and zinc .tire body metal is Ni and Copper alloy, strength can up to 690Mpa.hardness HB⩾160.outer layer of special flux and color of the electrode used to identify the grading size of cemented carbide particles. Therefore ,it is an excellent hard facing material.

WC composite rod has been respected throughout oil drilling, mining and construction industry worldwide, even spreading more and more industries and get greater using. The cemented carbide composite rod has high wear and cutting properties, weldability and low fuming , it is successfully used like stabilizers, reamers, construction drilling, drill pipe joints, pipe cutter blades, hydraulic cutter , scraper , core bit , piling drill, twist drill , milling and grinding shoes , etc.

* surfacing on the workpiece for manufacturing new tools
* surfacing on workpiece for restoring broken parts.

Tungsten carbide composite rod specification

grade	size (mm)	scrap size (mm)
YD-9.5	9.5	9.5~6.5
YD-8	8.0	8.0~6.5
YD-6.5	6.5	6.5~5.0
YD-5	5.0	5.0~3.0
YD-3	3.0	3.0~2.0
YD-10mesh	10mesh	10~18mesh
YD-18mesh	18mesh	18~30mesh
YD-30mesh	30mesh	30~50mesh

1 large particles are suitable for surfacing of oil pipeline cleaning equipment
2 small particle are suitable for surfacing of large mixer blades
3 smaller particles are suitable for root tree grinding machine

Specification Details

COMMODITY	COMPOSITION	SPECIFICATION
Tungsten Carbide Composite Rod	70%WC, 30%CuZnNi	0.4-1.6 mm 1/64-1/16 inch
Tungsten Carbide Composite Rod	70%WC, 30%CuZnNi	1.6-3.2 mm 1/16-1/8 inch
Tungsten Carbide Composite Rod	70%WC, 30%CuZnNi	3.2-4.8 mm 1/8-3/16 inch
Tungsten Carbide Composite Rod	70%WC, 30%CuZnNi	4.8-6.4 mm 3/16-1/4 inch
Tungsten Carbide Composite Rod	70%WC, 30%CuZnNi	6.35-8.0 mm 1/4-5/16 inch
Tungsten Carbide Composite Rod	70%WC, 30%CuZnNi	8.0-9.5 mm 5/16-3/8 inch
Tungsten Carbide Composite Rod	65%WC, 35%CuZnNi	0.4-1.6 mm 1/64-1/16 inch
Tungsten Carbide Composite Rod	65%WC, 35%CuZnNi	1.6-3.2 mm 1/16-1/8 inch
Tungsten Carbide Composite Rod	65%WC, 35%CuZnNi	3.2-4.8 mm 1/8-3/16 inch
Tungsten Carbide Composite Rod	65%WC, 35%CuZnNi	4.8-6.4 mm 3/16-1/4 inch
Tungsten Carbide Composite Rod	65%WC, 35%CuZnNi	6.35-8.0 mm 1/4-5/16 inch
Tungsten Carbide Composite Rod	65%WC, 35%CuZnNi	8.0-9.5 mm 5/16-3/8 inch
Tungsten Carbide Composite Rod	60%WC, 40%CuZnNi	0.4-1.6 mm 1/64-1/16 inch
Tungsten Carbide Composite Rod	60%WC, 40%CuZnNi	1.6-3.2 mm 1/16-1/8 inch
Tungsten Carbide Composite Rod	60%WC, 40%CuZnNi	3.2-4.8 mm 1/8-3/16 inch
Tungsten Carbide Composite Rod	60%WC, 40%CuZnNi	4.8-6.4 mm 3/16-1/4 inch
Tungsten Carbide Composite Rod	60%WC, 40%CuZnNi	6.35-8.0 mm 1/4-5/16 inch
Tungsten Carbide Composite Rod	60%WC, 40%CuZnNi	8.0-9.5 mm 5/16-3/8 inch
Tungsten Carbide Composite Rod	55%WC, 45%CuZnNi	0.4-1.6 mm 1/64-1/16 inch
Tungsten Carbide Composite Rod	55%WC, 45%CuZnNi	1.6-3.2 mm 1/16-1/8 inch
Tungsten Carbide Composite Rod	55%WC, 45%CuZnNi	3.2-4.8 mm 1/8-3/16 inch
Tungsten Carbide Composite Rod	55%WC, 45%CuZnNi	4.8-6.4 mm 3/16-1/4 inch
Tungsten Carbide Composite Rod	55%WC, 45%CuZnNi	6.35-8.0 mm 1/4-5/16 inch
Tungsten Carbide Composite Rod	55%WC, 45%CuZnNi	8.0-9.5 mm 5/16-3/8 inch
Tungsten Carbide Composite Rod	Custom	Custom

Variety of grit size is available , except above table.

Working condition of Tungsten carbide composite rod

(1) clean the workpiece to expose metallic luster on the surface of the welder.

(2) take the position of flat welding for surfacing. For this purpose, appropriate placemas can be used to control the thickness of the surfacing layer and the thickness limit block can be used.

(3) preheat with neutral flame. Do not touch the surface of the workpiece with the flame core. The distance should be 25mm.

(4) surfacing hard alloy welding layer.Use YD welding electrode for surfacing and use neutral flame (slightly carbonized flame) to move evenly and smoothly on the workpiece surface
Heat the alloy electrode (do not make the flame tip contact the alloy particles) to melt the matrix alloy in the electrode, and then the cemented carbide particles fall together.
Before the molten matrix metal solidifies, the particles are arranged and may be pulled up using an alloy electrode held in the left hand, or another person holding a bottom-electrode or stone The ink stick as a bar, in a quick manipulation of the particles, so that the arrangement of uniform.The thickness of the surfacing layer is controlled according to the design requirements.
(5) after the workpiece is welded, it shall be placed in an unventilated place, and it shall be cooled slowly and not be chilled rapidly. If available, it can be covered with asbestos blanket.
(6) after the workpiece is cooled to room temperature, the surfacing can be ground to the required size and shape if necessary.
(7) clean up the workpiece and remove all spatter, slag, etc.

WEISON

www.globaltungstens.com

Tungsten Carbide Wire Guide are used in both drawing and extrusion machines where material is forced under pressure through the die. and they could long time ensure the high surface roughness for high speed roughness for high-speed drawn process. there are variety of sizes and different shapes even special custom ,welcome contact WEISON for details .

Tungsten Carbide Wire Guide - Shapes

* hard metal eyelet, tungsten carbide rings, carbide eye, drill bushings, guide bushings, locating bushing, nipple, fitting

*tungsten carbide eyelet with flange, flanged eyelet, guide eyelet, flange bushing, hard metal flanged bush guide bushing, carbide drill bushings with collar

*air wipe, tungsten carbide injector, suction nozzle, doffing tube inserts

*conical bushings, tungsten carbide conical eyelets, conical thread guide

*tungsten carbide rods, shaft, pin

*pipe, tube, bushing, cylindrical eye

*tungsten carbide rollers, tungsten carbide rolls, tungsten carbide pulleys

*flanged tungsten carbide eyelet with groove, slotted thread guides, with slot, with outside groove

*bow guides in tungsten carbide, buncher guides with threaded bushing

*tungsten carbide bridge, tungsten carbide bow, rings, ring segment

*wire brake, yarn brake, thread brake

*yarn guides, trap type-thread guides, Traverse guides

*slit tungsten carbide guides, slit tungsten carbide, yarn carrier with slit, with bulge, open-type-tread guides

*pigtails, dogtails, hook guides, hooks with metal holder, with metal holder

WELSON

www.globaltungstens.com

Wear–resisting hard metal

Tungsten carbide insert

Turning inserts

Milling inserts

Threading inserts

Scarfing inserts

And so forth

According to customer's specification

Insert made of tungsten carbide,

●Cutting speed can be improved by 30%-40%.improve the production efficiency,coating and substrate are all adapted to cast iron of high speed and high feed cutting.

●To reduce the economic cost, improve the servie life of approximately 40%-50%

●Processing and high stability

CVD coated cemented carbide

The blade with special surface technology, greatly improved the blade surface roughness,effectively reduce the cutting force,reduce the cutter surface and the adhesive of the processed material,greatly impoved the stability to use.

Fibrous TiCN and the perfect conbination of fine grain AL2O3 caoting significantly improved the wear resistance and resistance to collapse of blade performance.

PVD coated cemented carbide

Nano structure of high performance TIALN coating, closer integration with the sustrate,to ensure that the blade has a high toughness and hardness.the unique coating process allows the blade to have a smooth surface ,reuce friction,clearance more smooth.he outstanding the thermal stability and chemical stability of the cutting edge provides an efficent protection.

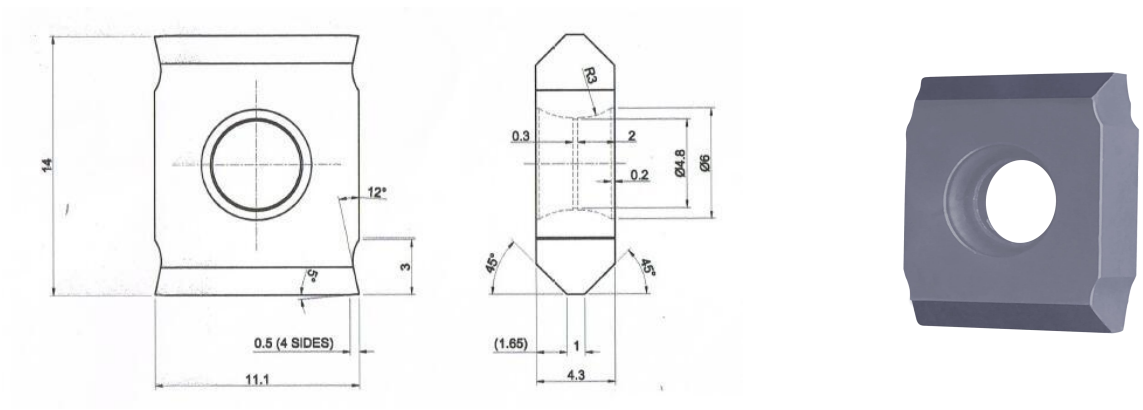

WELSON

www.globaltungstens.com

Wear-resisting hard metal

DOUBLE CUT

Allows rapid stock removal and increased production rates. Effectively breaks down the chips as the material is removed, resulting in a smoother running burr. Recommended for working on materials which produce long chips - soft steels, cast iron welds.

Tungsten Carbide Rotary Burrs CYLINDER [stock (rod) 3 or 6mm] (AEX)
D(Outer diameter)xL(height)xV(stock or rod diameter), mm
Conventional
2x15x3
3x15x3
4x15x3
5x15x3
6x15x3
6x16x6
8x18x6
10x20x6
12x25x6
14x25x6
16x25x6
20x25x6
Tungsten Carbide Rotary Burrs CYLINDRICAL BALL NOSE [stock (rod) 3 or 6mm] (CX)
2x15x3
3x15x3
4x15x3
5x15x3
6x15x3
6x16x6
8x18x6
10x20x6
12x25x6
14x25x6
16x25x6
20x25x6
25x25x6

CYLINDER
with End Cut

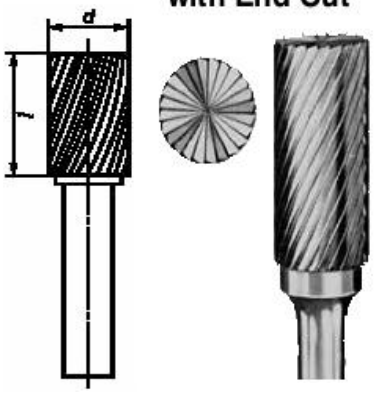

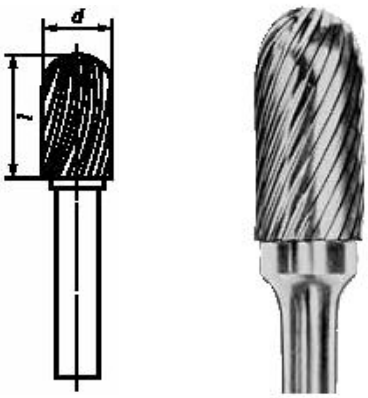

Tungsten Carbide Rotary Burrs BALL [stock (rod) 3 or 6mm] (DX)
2x3
3x3
4x3
5x3
6x3
6x6
8x6
10x6
12x6
14x6
16x6
20x6
25x6
Tungsten Carbide Rotary Burrs CONE (Angle 30°) [stock (rod) 3 or 6mm] (MX)
3x15x3
4x15x3
5x15x3
6x15x3
6x18x6
8x20x6
10x25x6
12x25x6
14x25x6
16x25x6
20x25x6
25x25x6
Tungsten Carbide Rotary Burrs BALL NOSE CONE [stock (rod) 3 or 6mm] (LX)
3x15x3
4x15x3
5x15x3
6x15x3
6x16x6
8x20x6
10x25x6
12x25x6
14x25x6
16x25x6
20x25x6
Tungsten Carbide Rotary Burrs CONE (Angle 60°) [stock (rod) 3 or 6mm] (KX)
3x3x3
4x4x3
5x4x3
6x4x3
6x3x6
8x4x6
10x5x6
12x6x6
14x7x6
16x8x6
20x20x6

BALL

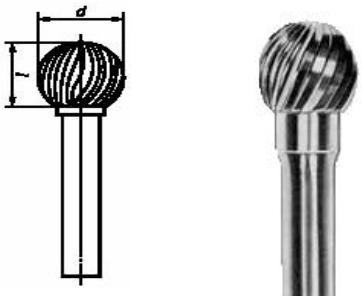

CONE Angle 30

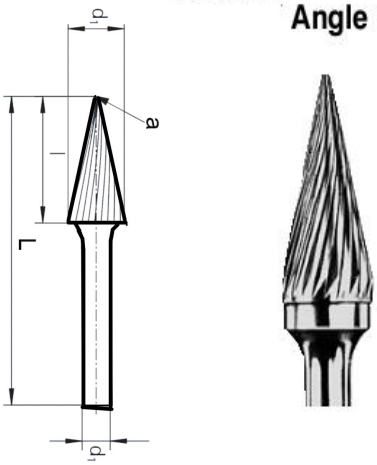

BALL NOSE

CONE 60°

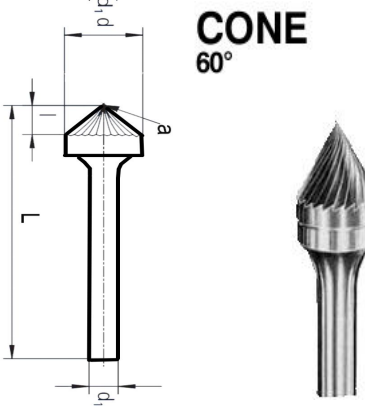

Tungsten Carbide Rotary Burrs INVERTED CONE [stock (rod) 3 or 6mm] (NEX)
3x10x3
4x15x3
5x15x3
6x15x3
6x10x6
8x10x6
10x10x6
12x13x6
14x15x6
16x16x6
20x25x6
Tungsten Carbide Rotary Burrs FLAME SHAPE [stock (rod) 3 or 6mm] (HX)
3x10x3
4x10x3
5x10x3
6x10x3
6x18x6
8x20x6
10x25x6
12x32x6
14x32x6
16x36x6
Tungsten Carbide Rotary Burrs POINTED TREE (Arch pointed nose) [stock (rod) 3 or 6mm] (GX)
3x10x3
4x10x3
5x10x3
6x10x3
6x18x6
8x18x6
10x20x6
12x25x6
14x25x6
16x25x6
Tungsten Carbide Rotary Burrs BALL NOSE TREE (Arch round (ball) nose) [stock (rod) 3 or 6mm] (FX)
3x10x3
4x10x3
5x10x3
6x10x3
6x18x6
8x18x6
10x20x6
12x25x6
14x25x6
16x25x6

INVERTED CONE

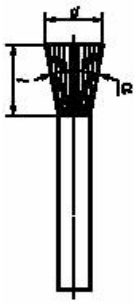

FLAME SHAPE

POINTED TREE

BALL NOSE

Tungsten Carbide Rotary Burrs OVAL [stock (rod) 3 or 6mm] (EX)
3x10x3
4x10x3
5x10x3
6x10x3
6x10x6
8x13x6
10x16x6
12x20x6
14x20x6
16x25x6
Tungsten Carbide Rotary Burrs Dise type 90°C [stock (rod) 3 or 6mm] (Y)
12x2x3
16x2x3
16x3x3
25x3x6
Customized

OVAL

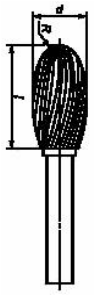

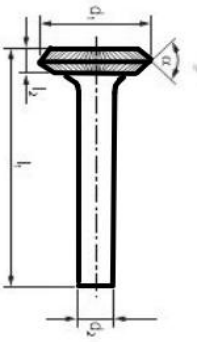

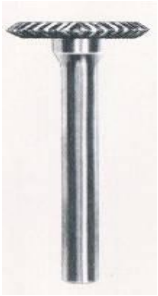

WELSON

www.globaltungstens.com

Wear-resisting hard metal

Tungsten carbide gripper insert

Tungsten carbide gripper inserts are welded into the steel jaws as chuck jaw for gripping drill rods in different ways , such as diamond drilling, coal mining, stone mining and oil mining. The carbide inserts for hydraulic and mechanical chucks. A wide range of high wear resistant tungsten carbide gripper inserts was provided with many teeth patterns and shapes to suit chucks: one end round , straight at two ends, round at two ends.

Regular Specification

20.8×9×6.3	58 pcs/kg	YG11C
22×10×6.3	49 pcs/kg	YG11C
28×6×5.5	85 pcs/kg	YG11C
25×5×3	190 pcs/kg	YG11C
35×6×4	81 pcs/kg	YG11C
49×30×10	5 pcs/kg	YG8
65×9.5×6.3	17 pcs/kg	YG8

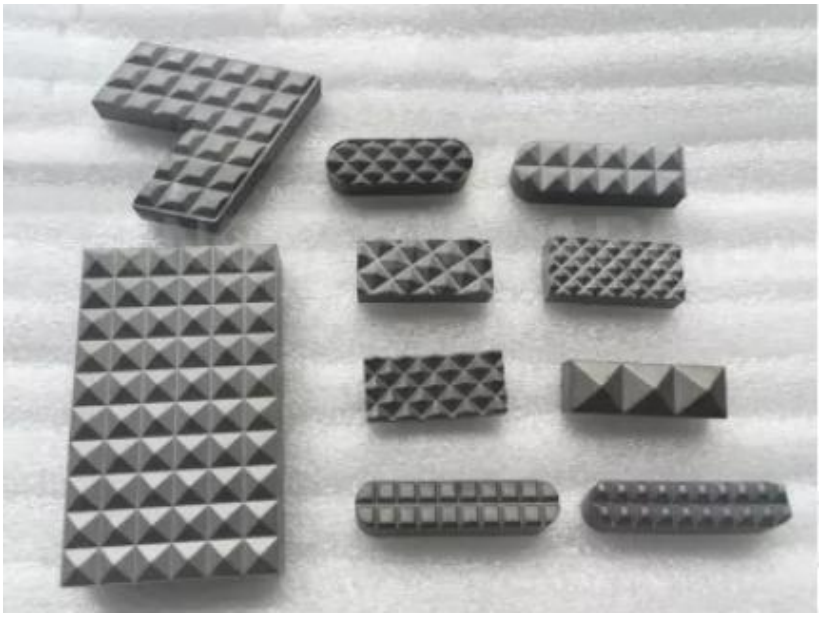

Variety of grippers, welcome to special customization.

WELSON

www.globaltungstens.com

Wear–resisting corrosion parts

Tungsten carbide sleeve/bushing

Tungsten Carbide Sleeve/Bushing Specification

Thickness:8-30mm

Diameter:20-500mm

Length:100-2000mm

Appearance:silver grey metal luster

Surface:0.16

Supply state:sintering or processing

Standard:GB/T 4187-1984 ASTM F288-90

Properties of Tungsten Carbide Sleeve/Bushing

1 Abrasive resistant,anti corrosion,high efficiency of heat conduction,low maintenance.
good compression property,high strength,stable performance

2. The hardness is 10 times of gold,5 times of tool steel,4 times of titanium,
Oil resistance,separate the harmful media.

3. No shape change,high bending strength when temperature， long life sapm

4. Large and extensive size

Application of Tungsten Carbide Sleeve/Bushing

A.Carbide sleeve/bushing mainly used for oil industry,high temperature furnace compnents,
crucible,missile rockets nozzel etc.

B. It is used for pressing blanks for spinning thin-wall tubes and other special purpose.

We can offer any tungsten material sleeve (pure tungsten sleeve,tungsten alloy sleeve,tungsten carbide sleeve) suitable for different working environments.

WELSON

www.globaltungstens.com

Tungsten carbide waterjet nozzle

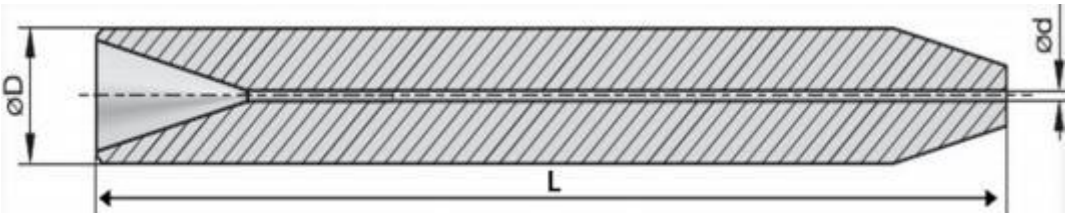

Type	D		d		L		Note
	mm	inch	mm	inch	mm	inch	
WS6000767	6.00	0.236	0.76	0.03	76.2	3	
WS6000807	6.00	0.236	0.80	1/32	70.0	2 (3/4)	
WS6001027	6.00	0.236	1.02	0.04	70.0	2 (3/4)	
WS6001027	6.00	0.236	1.02	0.04	76.2	3	
WS6350507	6.35	1/4	0.50	0.02	76.2	3	
WS6350607	6.35	1/4	0.60	0.023	76.2	3	
WS6350765	6.35	1/4	0.76	0.03	50.8	2	
WS6350767	6.35	1/4	0.76	0.03	76.2	3	
WS6351025	6.35	1/4	1.02	0.04	50.8	2	
WS6351027	6.35	1/4	1.02	0.04	76.2	3	
WS6351147	6.35	1/4	1.14	0.045	76.2	3	
WS6351207	6.35	1/4	1.20	3/64	76.2	3	
WS6351277	6.35	1/4	1.27	0.05	76.2	3	
WS6690767	6.69	0.263	0.76	0.03	76.2	3	
WS6691027	6.69	0.263	1.02	0.04	76.2	3	
WS6700707	6.70	0.264	0.70	0.028	70.0	2 (3/4)	
WS6701007	6.70	0.264	1.00	0.039	70.0	2 (3/4)	
WS7140507	7.14	9/32	0.50	0.02	76.2	3	
WS7140767	7.14	9/32	0.76	0.03	76.2	3	
WS7140761	7.14	9/32	0.76	0.03	101.6	4	
WS7141027	7.14	9/32	1.02	0.04	76.2	3	
WS7141021	7.14	9/32	1.02	0.04	101.6	4	
WS7141277	7.14	9/32	1.27	0.05	76.2	3	
WS7621027	7.62	0.3	1.02	0.04	76.2	3	
WS7621277	7.62	0.3	1.27	0.05	76.2	3	
WS7970501	7.97	0.313	0.50	0.02	101.6	4	
WS7970761	7.97	0.313	0.76	0.03	101.6	4	
WS7971071	7.97	0.313	1.07	0.042	101.6	4	
WS9430507	9.43	0.371	0.50	0.02	76.2	3	
WS9430767	9.43	0.371	0.76	0.03	76.2	3	
WS9431027	9.43	0.371	1.02	0.04	76.2	3	

Should you need other special sizes,please feel free to contact us

Tungsten Carbide Nozzle

Reasons for the high demand for tungsten carbide nozzles within the petrochemical industry

Tungsten carbide is an unmatched material when it comes to usage in the Oil and Gas industries. These industries often have extreme conditions both onshore as well as offshore. Various abrasive liquids, solids, sand along with high temperature and pressure conditions cause a significant amount of wear in all steps of the downstream as well as upstream processes. Parts like valves, choke beans, valve seat, sleeves and nozzles made out of the strong and highly resistant tungsten carbide are hence high in demand. Owing to the same, the demand and usage of tungsten carbide nozzles for the oil industry along with other important products have surged in the last few decades.

What makes tungsten carbide a great choice for nozzles?

• Super coarse grain hard alloy virgin raw material , 100% alloy by pressing and sintering , so that the hardness and toughness of the drill bit are increased by 30% simultaneously .

• Unique design, Drilling and digging speed raise 20%, life span extend 30%

• Dimensional stability in environments with high temperature and pressure conditions

• A fine finish which makes them easy to clean

• Great wear resistance, abrasion resistance

• Cost effective owing to long life span and negligible maintenance needs

How's the ultra-high pressure nozzle plays an important role in the design of ultra-high pressure bit and gain best effects.

At present, the number of deep well ultra-deep well drilling in the world is gradually increasing. Due to the increase of well depth, the drilling speed is significantly reduced, and the drilling cost of a deep well is less than tens of millions, more than hundreds of millions of yuan, the problem of huge deep well drilling cost will become increasingly prominent.Increasing drilling rate and reducing drilling cost have become a hot and difficult problem for drilling engineering experts in recent years.However, in the current rotary drilling mode, only 5% ~ 20% of mechanical energy is used for rock breaking due to low energy transfer efficiency, which makes the rate of rock-breaking drilling difficult to be satisfactory.Therefore, it is necessary to give full and reasonable play to the potential of existing technologies and mechanical equipment, make full use of hydraulic energy, and improve the rock-breaking and rock-clearing capacity of jet flow at the bottom of well, so as to achieve the purpose of increasing drilling speed and reducing cost.Drilling engineering experts all over the world agree that it is a fundamental way to solve the problem of ultra-deep well drilling speed by using downhole supercharger to implement ultra-high pressure fine jet assisted mechanical rock-breaking drilling, namely ultra-high pressure jet assisted drilling technology.Field experiments conducted by Veenhuizen et al. with uhp downhole pumps show that, for shale, uhp jet assisted rock breaking speed is about 1.45 times that of conventional rock breaking speed, 1.50 times that of granite, and up to 2.0 times that of sandstone.Therefore, it is of great significance to the development of ultra-high pressure drill, which is a direct breaking tool.The placement of ultra-high pressure nozzles plays an important role in the design of ultra-high pressure bit.

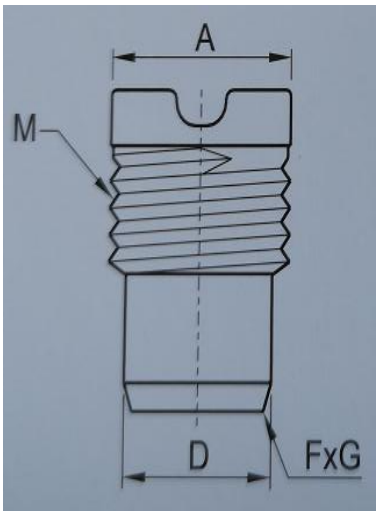

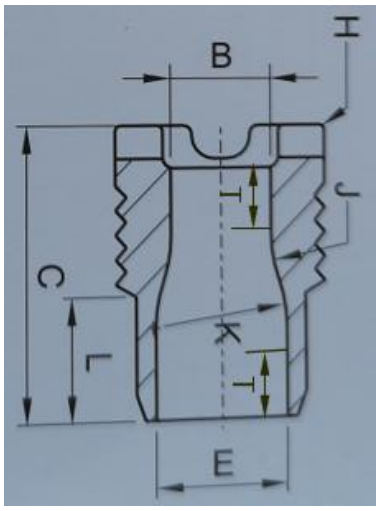

B		E		D		M	A	L		T		C	
inch	mm	inch	mm	inch	mm	inch	inch	inch	mm	inch	mm	inch	mm
3/16	4.76	1 1/8	28.57	1 3/8	34.92	1 3/4	1 3/4	3/16	4.76	3/16	4.76	1 5/8	41.27
7/32	5.56	1 1/8	28.57	1 3/8	34.92	1 3/4	1 3/4	3/16	4.76	3/16	4.76	1 5/8	41.27
1/4	6.35	1 1/8	28.57	1 3/8	34.92	1 3/4	1 3/4	3/16	4.76	3/16	4.76	1 5/8	41.27
9/32	7.14	1 1/8	28.57	1 3/8	34.92	1 3/4	1 3/4	3/16	4.76	3/16	4.76	1 5/8	41.27
5/16	7.94	1 1/8	28.57	1 3/8	34.92	1 3/4	1 3/4	3/16	4.76	3/16	4.76	1 5/8	41.27
11/32	8.73	1 1/8	28.57	1 3/8	34.92	1 3/4	1 3/4	3/16	4.76	3/16	4.76	1 5/8	41.27
3/8	9.52	1 1/8	28.57	1 3/8	34.92	1 3/4	1 3/4	3/16	4.76	3/16	4.76	1 5/8	41.27
13/32	10.32	1 1/8	28.57	1 3/8	34.92	1 3/4	1 3/4	3/16	4.76	3/16	4.76	1 5/8	41.27
7/16	11.11	1 1/8	28.57	1 3/8	34.92	1 3/4	1 3/4	3/16	4.76	3/16	4.76	1 5/8	41.27
15/32	11.91	1 1/8	28.57	1 3/8	34.92	1 3/4	1 3/4	3/16	4.76	3/16	4.76	1 5/8	41.27
1/2	12.70	1 1/8	28.57	1 3/8	34.92	1 3/4	1 3/4	3/16	4.76	3/16	4.76	1 5/8	41.27
17/32	13.49	1 1/8	28.57	1 3/8	34.92	1 3/4	1 3/4	3/16	4.76	3/16	4.76	1 5/8	41.27
9/16	14.29	1 1/8	28.57	1 3/8	34.92	1 3/4	1 3/4	3/16	4.76	3/16	4.76	1 5/8	41.27
19/32	15.08	1 1/8	28.57	1 3/8	34.92	1 3/4	1 3/4	3/16	4.76	3/16	4.76	1 5/8	41.27
5/8	15.87	1 1/8	28.57	1 3/8	34.92	1 3/4	1 3/4	3/16	4.76	3/16	4.76	1 5/8	41.27
21/32	16.67	1 1/8	28.57	1 3/8	34.92	1 3/4	1 3/4	3/16	4.76	3/16	4.76	1 5/8	41.27
11/16	17.46	1 1/8	28.57	1 3/8	34.92	1 3/4	1 3/4	3/16	4.76	3/16	4.76	1 5/8	41.27
23/32	18.26	1 1/8	28.57	1 3/8	34.92	1 3/4	1 3/4	3/16	4.76	3/16	4.76	1 5/8	41.27
3/4	19.05	1 1/8	28.57	1 3/8	34.92	1 3/4	1 3/4	3/16	4.76	3/16	4.76	1 5/8	41.27
25/32	19.84	1 1/8	28.57	1 3/8	34.92	1 3/4	1 3/4	3/16	4.76	3/16	4.76	1 5/8	41.27
13/16	20.64	1 1/8	28.57	1 3/8	34.92	1 3/4	1 3/4	3/16	4.76	3/16	4.76	1 5/8	41.27
27/32	21.43	1 1/8	28.57	1 3/8	34.92	1 3/4	1 3/4	3/16	4.76	3/16	4.76	1 5/8	41.27
7/8	22.22	1 1/8	28.57	1 3/8	34.92	1 3/4	1 3/4	3/16	4.76	3/16	4.76	1 5/8	41.27
29/32	23.02	1 1/8	28.57	1 3/8	34.92	1 3/4	1 3/4	3/16	4.76	3/16	4.76	1 5/8	41.27
15/16	23.81	1 1/8	28.57	1 3/8	34.92	1 3/4	1 3/4	3/16	4.76	3/16	4.76	1 5/8	41.27
31/32	24.61	1 1/8	28.57	1 3/8	34.92	1 3/4	1 3/4	3/16	4.76	3/16	4.76	1 5/8	41.27
1	25.40	1 1/8	28.57	1 3/8	34.92	1 3/4	1 3/4	3/16	4.76	3/16	4.76	1 5/8	41.27
3/16	4.76	1 1/8	28.57	1 1/2	38.10	1 3/4	1 3/4	3/16	4.76	3/16	4.76	1 5/8	41.27
7/32	5.56	1 1/8	28.57	1 1/2	38.10	1 3/4	1 3/4	3/16	4.76	3/16	4.76	1 5/8	41.27
1/4	6.35	1 1/8	28.57	1 1/2	38.10	1 3/4	1 3/4	3/16	4.76	3/16	4.76	1 5/8	41.27
9/32	7.14	1 1/8	28.57	1 1/2	38.10	1 3/4	1 3/4	3/16	4.76	3/16	4.76	1 5/8	41.27
5/16	7.94	1 1/8	28.57	1 1/2	38.10	1 3/4	1 3/4	3/16	4.76	3/16	4.76	1 5/8	41.27
11/32	8.73	1 1/8	28.57	1 1/2	38.10	1 3/4	1 3/4	3/16	4.76	3/16	4.76	1 5/8	41.27
3/8	9.52	1 1/8	28.57	1 1/2	38.10	1 3/4	1 3/4	3/16	4.76	3/16	4.76	1 5/8	41.27
13/32	10.32	1 1/8	28.57	1 1/2	38.10	1 3/4	1 3/4	3/16	4.76	3/16	4.76	1 5/8	41.27
7/16	11.11	1 1/8	28.57	1 1/2	38.10	1 3/4	1 3/4	3/16	4.76	3/16	4.76	1 5/8	41.27
15/32	11.91	1 1/8	28.57	1 1/2	38.10	1 3/4	1 3/4	3/16	4.76	3/16	4.76	1 5/8	41.27
1/2	12.70	1 1/8	28.57	1 1/2	38.10	1 3/4	1 3/4	3/16	4.76	3/16	4.76	1 5/8	41.27
17/32	13.49	1 1/8	28.57	1 1/2	38.10	1 3/4	1 3/4	3/16	4.76	3/16	4.76	1 5/8	41.27
9/16	14.29	1 1/8	28.57	1 1/2	38.10	1 3/4	1 3/4	3/16	4.76	3/16	4.76	1 5/8	41.27
19/32	15.08	1 1/8	28.57	1 1/2	38.10	1 3/4	1 3/4	3/16	4.76	3/16	4.76	1 5/8	41.27
5/8	15.87	1 1/8	28.57	1 1/2	38.10	1 3/4	1 3/4	3/16	4.76	3/16	4.76	1 5/8	41.27
21/32	16.67	1 1/8	28.57	1 1/2	38.10	1 3/4	1 3/4	3/16	4.76	3/16	4.76	1 5/8	41.27
11/16	17.46	1 1/8	28.57	1 1/2	38.10	1 3/4	1 3/4	3/16	4.76	3/16	4.76	1 5/8	41.27
23/32	18.26	1 1/8	28.57	1 1/2	38.10	1 3/4	1 3/4	3/16	4.76	3/16	4.76	1 5/8	41.27

www.globaltungsten.com

B		E		D		M	A	L		T		C	
inch	mm	inch	mm	inch	mm	inch	inch	inch	mm	inch	mm	inch	mm
3/4	19.05	1 1/8	28.57	1 1/2	38.10	1 3/4	1 3/4	3/16	4.76	3/16	4.76	1 5/8	41.27
25/32	19.84	1 1/8	28.57	1 1/2	38.10	1 3/4	1 3/4	3/16	4.76	3/16	4.76	1 5/8	41.27
13/16	20.64	1 1/8	28.57	1 1/2	38.10	1 3/4	1 3/4	3/16	4.76	3/16	4.76	1 5/8	41.27
27/32	21.43	1 1/8	28.57	1 1/2	38.10	1 3/4	1 3/4	3/16	4.76	3/16	4.76	1 5/8	41.27
7/8	22.22	1 1/8	28.57	1 1/2	38.10	1 3/4	1 3/4	3/16	4.76	3/16	4.76	1 5/8	41.27
29/32	23.02	1 1/8	28.57	1 1/2	38.10	1 3/4	1 3/4	3/16	4.76	3/16	4.76	1 5/8	41.27
15/16	23.81	1 1/8	28.57	1 1/2	38.10	1 3/4	1 3/4	3/16	4.76	3/16	4.76	1 5/8	41.27
31/32	24.61	1 1/8	28.57	1 1/2	38.10	1 3/4	1 3/4	3/16	4.76	3/16	4.76	1 5/8	41.27
1	25.40	1 1/8	28.57	1 1/2	38.10	1 3/4	1 3/4	3/16	4.76	3/16	4.76	1 5/8	41.27
3/16	4.76	1	25.40	1 1/4	31.75	1 3/4	1 3/4	3/16	4.76	3/16	4.76	1 5/8	41.27
7/32	5.56	1	25.40	1 1/4	31.75	1 3/4	1 3/4	3/16	4.76	3/16	4.76	1 5/8	41.27
1/4	6.35	1	25.40	1 1/4	31.75	1 3/4	1 3/4	3/16	4.76	3/16	4.76	1 5/8	41.27
9/32	7.14	1	25.40	1 1/4	31.75	1 3/4	1 3/4	3/16	4.76	3/16	4.76	1 5/8	41.27
5/16	7.94	1	25.40	1 1/4	31.75	1 3/4	1 3/4	3/16	4.76	3/16	4.76	1 5/8	41.27
11/32	8.73	1	25.40	1 1/4	31.75	1 3/4	1 3/4	3/16	4.76	3/16	4.76	1 5/8	41.27
3/8	9.52	1	25.40	1 1/4	31.75	1 3/4	1 3/4	3/16	4.76	3/16	4.76	1 5/8	41.27
13/32	10.32	1	25.40	1 1/4	31.75	1 3/4	1 3/4	3/16	4.76	3/16	4.76	1 5/8	41.27
7/16	11.11	1	25.40	1 1/4	31.75	1 3/4	1 3/4	3/16	4.76	3/16	4.76	1 5/8	41.27
15/32	11.91	1	25.40	1 1/4	31.75	1 3/4	1 3/4	3/16	4.76	3/16	4.76	1 5/8	41.27
1/2	12.70	1	25.40	1 1/4	31.75	1 3/4	1 3/4	3/16	4.76	3/16	4.76	1 5/8	41.27
17/32	13.49	1	25.40	1 1/4	31.75	1 3/4	1 3/4	3/16	4.76	3/16	4.76	1 5/8	41.27
9/16	14.29	1	25.40	1 1/4	31.75	1 3/4	1 3/4	3/16	4.76	3/16	4.76	1 5/8	41.27
19/32	15.08	1	25.40	1 1/4	31.75	1 3/4	1 3/4	3/16	4.76	3/16	4.76	1 5/8	41.27
5/8	15.87	1	25.40	1 1/4	31.75	1 3/4	1 3/4	3/16	4.76	3/16	4.76	1 5/8	41.27
21/32	16.67	1	25.40	1 1/4	31.75	1 3/4	1 3/4	3/16	4.76	3/16	4.76	1 5/8	41.27
11/16	17.46	1	25.40	1 1/4	31.75	1 3/4	1 3/4	3/16	4.76	3/16	4.76	1 5/8	41.27
23/32	18.26	1	25.40	1 1/4	31.75	1 3/4	1 3/4	3/16	4.76	3/16	4.76	1 5/8	41.27
3/4	19.05	1	25.40	1 1/4	31.75	1 3/4	1 3/4	3/16	4.76	3/16	4.76	1 5/8	41.27
25/32	19.84	1	25.40	1 1/4	31.75	1 3/4	1 3/4	3/16	4.76	3/16	4.76	1 5/8	41.27
13/16	20.64	1	25.40	1 1/4	31.75	1 3/4	1 3/4	3/16	4.76	3/16	4.76	1 5/8	41.27
27/32	21.43	1	25.40	1 1/4	31.75	1 3/4	1 3/4	3/16	4.76	3/16	4.76	1 5/8	41.27
7/8	22.22	1	25.40	1 1/4	31.75	1 3/4	1 3/4	3/16	4.76	3/16	4.76	1 5/8	41.27
29/32	23.02	1	25.40	1 1/4	31.75	1 3/4	1 3/4	3/16	4.76	3/16	4.76	1 5/8	41.27
15/16	23.81	1	25.40	1 1/4	31.75	1 3/4	1 3/4	3/16	4.76	3/16	4.76	1 5/8	41.27
31/32	24.61	1	25.40	1 1/4	31.75	1 3/4	1 3/4	3/16	4.76	3/16	4.76	1 5/8	41.27
1	25.40	1	25.40	1 1/4	31.75	1 3/4	1 3/4	3/16	4.76	3/16	4.76	1 5/8	41.27
3/16	4.76	1	25.40	1 3/8	34.92	1 3/4	1 3/4	3/16	4.76	3/16	4.76	1 5/8	41.27
7/32	5.56	1	25.40	1 3/8	34.92	1 3/4	1 3/4	3/16	4.76	3/16	4.76	1 5/8	41.27
1/4	6.35	1	25.40	1 3/8	34.92	1 3/4	1 3/4	3/16	4.76	3/16	4.76	1 5/8	41.27
9/32	7.14	1	25.40	1 3/8	34.92	1 3/4	1 3/4	3/16	4.76	3/16	4.76	1 5/8	41.27
5/16	7.94	1	25.40	1 3/8	34.92	1 3/4	1 3/4	3/16	4.76	3/16	4.76	1 5/8	41.27
11/32	8.73	1	25.40	1 3/8	34.92	1 3/4	1 3/4	3/16	4.76	3/16	4.76	1 5/8	41.27
3/8	9.52	1	25.40	1 3/8	34.92	1 3/4	1 3/4	3/16	4.76	3/16	4.76	1 5/8	41.27
13/32	10.32	1	25.40	1 3/8	34.92	1 3/4	1 3/4	3/16	4.76	3/16	4.76	1 5/8	41.27
7/16	11.11	1	25.40	1 3/8	34.92	1 3/4	1 3/4	3/16	4.76	3/16	4.76	1 5/8	41.27

www.globaltunsten.com

B		E		D		M	A	L		T		C	
inch	mm	inch	mm	inch	mm	inch	inch	inch	mm	inch	mm	inch	mm
15/32	11.91	1	25.40	1 3/8	34.92	1 3/4	1 3/4	3/16	4.76	3/16	4.76	1 5/8	41.27
1/2	12.70	1	25.40	1 3/8	34.92	1 3/4	1 3/4	3/16	4.76	3/16	4.76	1 5/8	41.27
17/32	13.49	1	25.40	1 3/8	34.92	1 3/4	1 3/4	3/16	4.76	3/16	4.76	1 5/8	41.27
9/16	14.29	1	25.40	1 3/8	34.92	1 3/4	1 3/4	3/16	4.76	3/16	4.76	1 5/8	41.27
19/32	15.08	1	25.40	1 3/8	34.92	1 3/4	1 3/4	3/16	4.76	3/16	4.76	1 5/8	41.27
5/8	15.87	1	25.40	1 3/8	34.92	1 3/4	1 3/4	3/16	4.76	3/16	4.76	1 5/8	41.27
21/32	16.67	1	25.40	1 3/8	34.92	1 3/4	1 3/4	3/16	4.76	3/16	4.76	1 5/8	41.27
11/16	17.46	1	25.40	1 3/8	34.92	1 3/4	1 3/4	3/16	4.76	3/16	4.76	1 5/8	41.27
23/32	18.26	1	25.40	1 3/8	34.92	1 3/4	1 3/4	3/16	4.76	3/16	4.76	1 5/8	41.27
3/4	19.05	1	25.40	1 3/8	34.92	1 3/4	1 3/4	3/16	4.76	3/16	4.76	1 5/8	41.27
25/32	19.84	1	25.40	1 3/8	34.92	1 3/4	1 3/4	3/16	4.76	3/16	4.76	1 5/8	41.27
13/16	20.64	1	25.40	1 3/8	34.92	1 3/4	1 3/4	3/16	4.76	3/16	4.76	1 5/8	41.27
27/32	21.43	1	25.40	1 3/8	34.92	1 3/4	1 3/4	3/16	4.76	3/16	4.76	1 5/8	41.27
7/8	22.22	1	25.40	1 3/8	34.92	1 3/4	1 3/4	3/16	4.76	3/16	4.76	1 5/8	41.27
29/32	23.02	1	25.40	1 3/8	34.92	1 3/4	1 3/4	3/16	4.76	3/16	4.76	1 5/8	41.27
15/16	23.81	1	25.40	1 3/8	34.92	1 3/4	1 3/4	3/16	4.76	3/16	4.76	1 5/8	41.27
31/32	24.61	1	25.40	1 3/8	34.92	1 3/4	1 3/4	3/16	4.76	3/16	4.76	1 5/8	41.27
1	25.40	1	25.40	1 3/8	34.92	1 3/4	1 3/4	3/16	4.76	3/16	4.76	1 5/8	41.27
3/16	4.76	1	25.40	1 1/2	38.10	1 3/4	1 3/4	3/16	4.76	3/16	4.76	1 5/8	41.27
7/32	5.56	1	25.40	1 1/2	38.10	1 3/4	1 3/4	3/16	4.76	3/16	4.76	1 5/8	41.27
1/4	6.35	1	25.40	1 1/2	38.10	1 3/4	1 3/4	3/16	4.76	3/16	4.76	1 5/8	41.27
9/32	7.14	1	25.40	1 1/2	38.10	1 3/4	1 3/4	3/16	4.76	3/16	4.76	1 5/8	41.27
5/16	7.94	1	25.40	1 1/2	38.10	1 3/4	1 3/4	3/16	4.76	3/16	4.76	1 5/8	41.27
11/32	8.73	1	25.40	1 1/2	38.10	1 3/4	1 3/4	3/16	4.76	3/16	4.76	1 5/8	41.27
3/8	9.52	1	25.40	1 1/2	38.10	1 3/4	1 3/4	3/16	4.76	3/16	4.76	1 5/8	41.27
13/32	10.32	1	25.40	1 1/2	38.10	1 3/4	1 3/4	3/16	4.76	3/16	4.76	1 5/8	41.27
7/16	11.11	1	25.40	1 1/2	38.10	1 3/4	1 3/4	3/16	4.76	3/16	4.76	1 5/8	41.27
15/32	11.91	1	25.40	1 1/2	38.10	1 3/4	1 3/4	3/16	4.76	3/16	4.76	1 5/8	41.27
1/2	12.70	1	25.40	1 1/2	38.10	1 3/4	1 3/4	3/16	4.76	3/16	4.76	1 5/8	41.27
17/32	13.49	1	25.40	1 1/2	38.10	1 3/4	1 3/4	3/16	4.76	3/16	4.76	1 5/8	41.27
9/16	14.29	1	25.40	1 1/2	38.10	1 3/4	1 3/4	3/16	4.76	3/16	4.76	1 5/8	41.27
19/32	15.08	1	25.40	1 1/2	38.10	1 3/4	1 3/4	3/16	4.76	3/16	4.76	1 5/8	41.27
5/8	15.87	1	25.40	1 1/2	38.10	1 3/4	1 3/4	3/16	4.76	3/16	4.76	1 5/8	41.27
21/32	16.67	1	25.40	1 1/2	38.10	1 3/4	1 3/4	3/16	4.76	3/16	4.76	1 5/8	41.27
11/16	17.46	1	25.40	1 1/2	38.10	1 3/4	1 3/4	3/16	4.76	3/16	4.76	1 5/8	41.27
23/32	18.26	1	25.40	1 1/2	38.10	1 3/4	1 3/4	3/16	4.76	3/16	4.76	1 5/8	41.27
3/4	19.05	1	25.40	1 1/2	38.10	1 3/4	1 3/4	3/16	4.76	3/16	4.76	1 5/8	41.27
25/32	19.84	1	25.40	1 1/2	38.10	1 3/4	1 3/4	3/16	4.76	3/16	4.76	1 5/8	41.27
13/16	20.64	1	25.40	1 1/2	38.10	1 3/4	1 3/4	3/16	4.76	3/16	4.76	1 5/8	41.27
27/32	21.43	1	25.40	1 1/2	38.10	1 3/4	1 3/4	3/16	4.76	3/16	4.76	1 5/8	41.27
7/8	22.22	1	25.40	1 1/2	38.10	1 3/4	1 3/4	3/16	4.76	3/16	4.76	1 5/8	41.27
29/32	23.02	1	25.40	1 1/2	38.10	1 3/4	1 3/4	3/16	4.76	3/16	4.76	1 5/8	41.27
15/16	23.81	1	25.40	1 1/2	38.10	1 3/4	1 3/4	3/16	4.76	3/16	4.76	1 5/8	41.27
31/32	24.61	1	25.40	1 1/2	38.10	1 3/4	1 3/4	3/16	4.76	3/16	4.76	1 5/8	41.27
1	25.40	1	25.40	1 1/2	38.10	1 3/4	1 3/4	3/16	4.76	3/16	4.76	1 5/8	41.27

www.globaltungsten.com

B		E		D		M	A	L		T		C	
inch	mm	inch	mm	inch	mm	inch	inch	inch	mm	inch	mm	inch	mm
3/16	4.76	7/8	22.22	1 1/8	28.57	1 3/4	1 3/4	3/16	4.76	3/16	4.76	1 5/8	41.27
7/32	5.56	7/8	22.22	1 1/8	28.57	1 3/4	1 3/4	3/16	4.76	3/16	4.76	1 5/8	41.27
1/4	6.35	7/8	22.22	1 1/8	28.57	1 3/4	1 3/4	3/16	4.76	3/16	4.76	1 5/8	41.27
9/32	7.14	7/8	22.22	1 1/8	28.57	1 3/4	1 3/4	3/16	4.76	3/16	4.76	1 5/8	41.27
5/16	7.94	7/8	22.22	1 1/8	28.57	1 3/4	1 3/4	3/16	4.76	3/16	4.76	1 5/8	41.27
11/32	8.73	7/8	22.22	1 1/8	28.57	1 3/4	1 3/4	3/16	4.76	3/16	4.76	1 5/8	41.27
3/8	9.52	7/8	22.22	1 1/8	28.57	1 3/4	1 3/4	3/16	4.76	3/16	4.76	1 5/8	41.27
13/32	10.32	7/8	22.22	1 1/8	28.57	1 3/4	1 3/4	3/16	4.76	3/16	4.76	1 5/8	41.27
7/16	11.11	7/8	22.22	1 1/8	28.57	1 3/4	1 3/4	3/16	4.76	3/16	4.76	1 5/8	41.27
15/32	11.91	7/8	22.22	1 1/8	28.57	1 3/4	1 3/4	3/16	4.76	3/16	4.76	1 5/8	41.27
1/2	12.70	7/8	22.22	1 1/8	28.57	1 3/4	1 3/4	3/16	4.76	3/16	4.76	1 5/8	41.27
17/32	13.49	7/8	22.22	1 1/8	28.57	1 3/4	1 3/4	3/16	4.76	3/16	4.76	1 5/8	41.27
9/16	14.29	7/8	22.22	1 1/8	28.57	1 3/4	1 3/4	3/16	4.76	3/16	4.76	1 5/8	41.27
19/32	15.08	7/8	22.22	1 1/8	28.57	1 3/4	1 3/4	3/16	4.76	3/16	4.76	1 5/8	41.27
5/8	15.87	7/8	22.22	1 1/8	28.57	1 3/4	1 3/4	3/16	4.76	3/16	4.76	1 5/8	41.27
21/32	16.67	7/8	22.22	1 1/8	28.57	1 3/4	1 3/4	3/16	4.76	3/16	4.76	1 5/8	41.27
11/16	17.46	7/8	22.22	1 1/8	28.57	1 3/4	1 3/4	3/16	4.76	3/16	4.76	1 5/8	41.27
23/32	18.26	7/8	22.22	1 1/8	28.57	1 3/4	1 3/4	3/16	4.76	3/16	4.76	1 5/8	41.27
3/4	19.05	7/8	22.22	1 1/8	28.57	1 3/4	1 3/4	3/16	4.76	3/16	4.76	1 5/8	41.27
25/32	19.84	7/8	22.22	1 1/8	28.57	1 3/4	1 3/4	3/16	4.76	3/16	4.76	1 5/8	41.27
13/16	20.64	7/8	22.22	1 1/8	28.57	1 3/4	1 3/4	3/16	4.76	3/16	4.76	1 5/8	41.27
27/32	21.43	7/8	22.22	1 1/8	28.57	1 3/4	1 3/4	3/16	4.76	3/16	4.76	1 5/8	41.27
7/8	22.22	7/8	22.22	1 1/8	28.57	1 3/4	1 3/4	3/16	4.76	3/16	4.76	1 5/8	41.27
3/16	4.76	7/8	22.22	1 1/4	31.75	1 3/4	1 3/4	3/16	4.76	3/16	4.76	1 5/8	41.27
7/32	5.56	7/8	22.22	1 1/4	31.75	1 3/4	1 3/4	3/16	4.76	3/16	4.76	1 5/8	41.27
1/4	6.35	7/8	22.22	1 1/4	31.75	1 3/4	1 3/4	3/16	4.76	3/16	4.76	1 5/8	41.27
9/32	7.14	7/8	22.22	1 1/4	31.75	1 3/4	1 3/4	3/16	4.76	3/16	4.76	1 5/8	41.27
5/16	7.94	7/8	22.22	1 1/4	31.75	1 3/4	1 3/4	3/16	4.76	3/16	4.76	1 5/8	41.27
11/32	8.73	7/8	22.22	1 1/4	31.75	1 3/4	1 3/4	3/16	4.76	3/16	4.76	1 5/8	41.27
3/8	9.52	7/8	22.22	1 1/4	31.75	1 3/4	1 3/4	3/16	4.76	3/16	4.76	1 5/8	41.27
13/32	10.32	7/8	22.22	1 1/4	31.75	1 3/4	1 3/4	3/16	4.76	3/16	4.76	1 5/8	41.27
7/16	11.11	7/8	22.22	1 1/4	31.75	1 3/4	1 3/4	3/16	4.76	3/16	4.76	1 5/8	41.27
15/32	11.91	7/8	22.22	1 1/4	31.75	1 3/4	1 3/4	3/16	4.76	3/16	4.76	1 5/8	41.27
1/2	12.70	7/8	22.22	1 1/4	31.75	1 3/4	1 3/4	3/16	4.76	3/16	4.76	1 5/8	41.27
17/32	13.49	7/8	22.22	1 1/4	31.75	1 3/4	1 3/4	3/16	4.76	3/16	4.76	1 5/8	41.27
9/16	14.29	7/8	22.22	1 1/4	31.75	1 3/4	1 3/4	3/16	4.76	3/16	4.76	1 5/8	41.27
19/32	15.08	7/8	22.22	1 1/4	31.75	1 3/4	1 3/4	3/16	4.76	3/16	4.76	1 5/8	41.27
5/8	15.87	7/8	22.22	1 1/4	31.75	1 3/4	1 3/4	3/16	4.76	3/16	4.76	1 5/8	41.27
21/32	16.67	7/8	22.22	1 1/4	31.75	1 3/4	1 3/4	3/16	4.76	3/16	4.76	1 5/8	41.27
11/16	17.46	7/8	22.22	1 1/4	31.75	1 3/4	1 3/4	3/16	4.76	3/16	4.76	1 5/8	41.27
23/32	18.26	7/8	22.22	1 1/4	31.75	1 3/4	1 3/4	3/16	4.76	3/16	4.76	1 5/8	41.27
3/4	19.05	7/8	22.22	1 1/4	31.75	1 3/4	1 3/4	3/16	4.76	3/16	4.76	1 5/8	41.27
25/32	19.84	7/8	22.22	1 1/4	31.75	1 3/4	1 3/4	3/16	4.76	3/16	4.76	1 5/8	41.27
13/16	20.64	7/8	22.22	1 1/4	31.75	1 3/4	1 3/4	3/16	4.76	3/16	4.76	1 5/8	41.27
27/32	21.43	7/8	22.22	1 1/4	31.75	1 3/4	1 3/4	3/16	4.76	3/16	4.76	1 5/8	41.27

www.globaltungsteins.com

B		E		D		M	A	L		T		C	
inch	mm	inch	mm	inch	mm	inch	inch	inch	mm	inch	mm	inch	mm
7/8	22.22	7/8	22.22	1 1/4	31.75	1 3/4	1 3/4	3/16	4.76	3/16	4.76	1 5/8	41.27
3/16	4.76	7/8	22.22	1 3/8	34.92	1 3/4	1 3/4	3/16	4.76	3/16	4.76	1 5/8	41.27
7/32	5.56	7/8	22.22	1 3/8	34.92	1 3/4	1 3/4	3/16	4.76	3/16	4.76	1 5/8	41.27
1/4	6.35	7/8	22.22	1 3/8	34.92	1 3/4	1 3/4	3/16	4.76	3/16	4.76	1 5/8	41.27
9/32	7.14	7/8	22.22	1 3/8	34.92	1 3/4	1 3/4	3/16	4.76	3/16	4.76	1 5/8	41.27
5/16	7.94	7/8	22.22	1 3/8	34.92	1 3/4	1 3/4	3/16	4.76	3/16	4.76	1 5/8	41.27
11/32	8.73	7/8	22.22	1 3/8	34.92	1 3/4	1 3/4	3/16	4.76	3/16	4.76	1 5/8	41.27
3/8	9.52	7/8	22.22	1 3/8	34.92	1 3/4	1 3/4	3/16	4.76	3/16	4.76	1 5/8	41.27
13/32	10.32	7/8	22.22	1 3/8	34.92	1 3/4	1 3/4	3/16	4.76	3/16	4.76	1 5/8	41.27
7/16	11.11	7/8	22.22	1 3/8	34.92	1 3/4	1 3/4	3/16	4.76	3/16	4.76	1 5/8	41.27
15/32	11.91	7/8	22.22	1 3/8	34.92	1 3/4	1 3/4	3/16	4.76	3/16	4.76	1 5/8	41.27
1/2	12.70	7/8	22.22	1 3/8	34.92	1 3/4	1 3/4	3/16	4.76	3/16	4.76	1 5/8	41.27
17/32	13.49	7/8	22.22	1 3/8	34.92	1 3/4	1 3/4	3/16	4.76	3/16	4.76	1 5/8	41.27
9/16	14.29	7/8	22.22	1 3/8	34.92	1 3/4	1 3/4	3/16	4.76	3/16	4.76	1 5/8	41.27
19/32	15.08	7/8	22.22	1 3/8	34.92	1 3/4	1 3/4	3/16	4.76	3/16	4.76	1 5/8	41.27
5/8	15.87	7/8	22.22	1 3/8	34.92	1 3/4	1 3/4	3/16	4.76	3/16	4.76	1 5/8	41.27
21/32	16.67	7/8	22.22	1 3/8	34.92	1 3/4	1 3/4	3/16	4.76	3/16	4.76	1 5/8	41.27
11/16	17.46	7/8	22.22	1 3/8	34.92	1 3/4	1 3/4	3/16	4.76	3/16	4.76	1 5/8	41.27
23/32	18.26	7/8	22.22	1 3/8	34.92	1 3/4	1 3/4	3/16	4.76	3/16	4.76	1 5/8	41.27
3/4	19.05	7/8	22.22	1 3/8	34.92	1 3/4	1 3/4	3/16	4.76	3/16	4.76	1 5/8	41.27
25/32	19.84	7/8	22.22	1 3/8	34.92	1 3/4	1 3/4	3/16	4.76	3/16	4.76	1 5/8	41.27
13/16	20.64	7/8	22.22	1 3/8	34.92	1 3/4	1 3/4	3/16	4.76	3/16	4.76	1 5/8	41.27
27/32	21.43	7/8	22.22	1 3/8	34.92	1 3/4	1 3/4	3/16	4.76	3/16	4.76	1 5/8	41.27
7/8	22.22	7/8	22.22	1 3/8	34.92	1 3/4	1 3/4	3/16	4.76	3/16	4.76	1 5/8	41.27
3/16	4.76	7/8	22.22	1 1/2	38.10	1 3/4	1 3/4	3/16	4.76	3/16	4.76	1 5/8	41.27
7/32	5.56	7/8	22.22	1 1/2	38.10	1 3/4	1 3/4	3/16	4.76	3/16	4.76	1 5/8	41.27
1/4	6.35	7/8	22.22	1 1/2	38.10	1 3/4	1 3/4	3/16	4.76	3/16	4.76	1 5/8	41.27
9/32	7.14	7/8	22.22	1 1/2	38.10	1 3/4	1 3/4	3/16	4.76	3/16	4.76	1 5/8	41.27
5/16	7.94	7/8	22.22	1 1/2	38.10	1 3/4	1 3/4	3/16	4.76	3/16	4.76	1 5/8	41.27
11/32	8.73	7/8	22.22	1 1/2	38.10	1 3/4	1 3/4	3/16	4.76	3/16	4.76	1 5/8	41.27
3/8	9.52	7/8	22.22	1 1/2	38.10	1 3/4	1 3/4	3/16	4.76	3/16	4.76	1 5/8	41.27
13/32	10.32	7/8	22.22	1 1/2	38.10	1 3/4	1 3/4	3/16	4.76	3/16	4.76	1 5/8	41.27
7/16	11.11	7/8	22.22	1 1/2	38.10	1 3/4	1 3/4	3/16	4.76	3/16	4.76	1 5/8	41.27
15/32	11.91	7/8	22.22	1 1/2	38.10	1 3/4	1 3/4	3/16	4.76	3/16	4.76	1 5/8	41.27
1/2	12.70	7/8	22.22	1 1/2	38.10	1 3/4	1 3/4	3/16	4.76	3/16	4.76	1 5/8	41.27
17/32	13.49	7/8	22.22	1 1/2	38.10	1 3/4	1 3/4	3/16	4.76	3/16	4.76	1 5/8	41.27
9/16	14.29	7/8	22.22	1 1/2	38.10	1 3/4	1 3/4	3/16	4.76	3/16	4.76	1 5/8	41.27
19/32	15.08	7/8	22.22	1 1/2	38.10	1 3/4	1 3/4	3/16	4.76	3/16	4.76	1 5/8	41.27
5/8	15.87	7/8	22.22	1 1/2	38.10	1 3/4	1 3/4	3/16	4.76	3/16	4.76	1 5/8	41.27
21/32	16.67	7/8	22.22	1 1/2	38.10	1 3/4	1 3/4	3/16	4.76	3/16	4.76	1 5/8	41.27
11/16	17.46	7/8	22.22	1 1/2	38.10	1 3/4	1 3/4	3/16	4.76	3/16	4.76	1 5/8	41.27
23/32	18.26	7/8	22.22	1 1/2	38.10	1 3/4	1 3/4	3/16	4.76	3/16	4.76	1 5/8	41.27
3/4	19.05	7/8	22.22	1 1/2	38.10	1 3/4	1 3/4	3/16	4.76	3/16	4.76	1 5/8	41.27
25/32	19.84	7/8	22.22	1 1/2	38.10	1 3/4	1 3/4	3/16	4.76	3/16	4.76	1 5/8	41.27
13/16	20.64	7/8	22.22	1 1/2	38.10	1 3/4	1 3/4	3/16	4.76	3/16	4.76	1 5/8	41.27

www.globaltungsten.com

B		E		D		M	A	L		T		C	
inch	mm	inch	mm	inch	mm	inch	inch	inch	mm	inch	mm	inch	mm
27/32	21.43	7/8	22.22	1 1/2	38.10	1 3/4	1 3/4	3/16	4.76	3/16	4.76	1 5/8	41.27
7/8	22.22	7/8	22.22	1 1/2	38.10	1 3/4	1 3/4	3/16	4.76	3/16	4.76	1 5/8	41.27
3/16	4.76	3/4	19.05	29/32	23.02	1 3/4	1 3/4	3/16	4.76	3/16	4.76	1 5/8	41.27
7/32	5.56	3/4	19.05	29/32	23.02	1 3/4	1 3/4	3/16	4.76	3/16	4.76	1 5/8	41.27
1/4	6.35	3/4	19.05	29/32	23.02	1 3/4	1 3/4	3/16	4.76	3/16	4.76	1 5/8	41.27
9/32	7.14	3/4	19.05	29/32	23.02	1 3/4	1 3/4	3/16	4.76	3/16	4.76	1 5/8	41.27
5/16	7.94	3/4	19.05	29/32	23.02	1 3/4	1 3/4	3/16	4.76	3/16	4.76	1 5/8	41.27
11/32	8.73	3/4	19.05	29/32	23.02	1 3/4	1 3/4	3/16	4.76	3/16	4.76	1 5/8	41.27
3/8	9.52	3/4	19.05	29/32	23.02	1 3/4	1 3/4	3/16	4.76	3/16	4.76	1 5/8	41.27
13/32	10.32	3/4	19.05	29/32	23.02	1 3/4	1 3/4	3/16	4.76	3/16	4.76	1 5/8	41.27
7/16	11.11	3/4	19.05	29/32	23.02	1 3/4	1 3/4	3/16	4.76	3/16	4.76	1 5/8	41.27
15/32	11.91	3/4	19.05	29/32	23.02	1 3/4	1 3/4	3/16	4.76	3/16	4.76	1 5/8	41.27
1/2	12.70	3/4	19.05	29/32	23.02	1 3/4	1 3/4	3/16	4.76	3/16	4.76	1 5/8	41.27
17/32	13.49	3/4	19.05	29/32	23.02	1 3/4	1 3/4	3/16	4.76	3/16	4.76	1 5/8	41.27
9/16	14.29	3/4	19.05	29/32	23.02	1 3/4	1 3/4	3/16	4.76	3/16	4.76	1 5/8	41.27
19/32	15.08	3/4	19.05	29/32	23.02	1 3/4	1 3/4	3/16	4.76	3/16	4.76	1 5/8	41.27
5/8	15.87	3/4	19.05	29/32	23.02	1 3/4	1 3/4	3/16	4.76	3/16	4.76	1 5/8	41.27
21/32	16.67	3/4	19.05	29/32	23.02	1 3/4	1 3/4	3/16	4.76	3/16	4.76	1 5/8	41.27
11/16	17.46	3/4	19.05	29/32	23.02	1 3/4	1 3/4	3/16	4.76	3/16	4.76	1 5/8	41.27
23/32	18.26	3/4	19.05	29/32	23.02	1 3/4	1 3/4	3/16	4.76	3/16	4.76	1 5/8	41.27
3/4	19.05	3/4	19.05	29/32	23.02	1 3/4	1 3/4	3/16	4.76	3/16	4.76	1 5/8	41.27
3/16	4.76	3/4	19.05	15/16	23.81	1 3/4	1 3/4	3/16	4.76	3/16	4.76	1 5/8	41.27
7/32	5.56	3/4	19.05	15/16	23.81	1 3/4	1 3/4	3/16	4.76	3/16	4.76	1 5/8	41.27
1/4	6.35	3/4	19.05	15/16	23.81	1 3/4	1 3/4	3/16	4.76	3/16	4.76	1 5/8	41.27
9/32	7.14	3/4	19.05	15/16	23.81	1 3/4	1 3/4	3/16	4.76	3/16	4.76	1 5/8	41.27
5/16	7.94	3/4	19.05	15/16	23.81	1 3/4	1 3/4	3/16	4.76	3/16	4.76	1 5/8	41.27
11/32	8.73	3/4	19.05	15/16	23.81	1 3/4	1 3/4	3/16	4.76	3/16	4.76	1 5/8	41.27
3/8	9.52	3/4	19.05	15/16	23.81	1 3/4	1 3/4	3/16	4.76	3/16	4.76	1 5/8	41.27
13/32	10.32	3/4	19.05	15/16	23.81	1 3/4	1 3/4	3/16	4.76	3/16	4.76	1 5/8	41.27
7/16	11.11	3/4	19.05	15/16	23.81	1 3/4	1 3/4	3/16	4.76	3/16	4.76	1 5/8	41.27
15/32	11.91	3/4	19.05	15/16	23.81	1 3/4	1 3/4	3/16	4.76	3/16	4.76	1 5/8	41.27
1/2	12.70	3/4	19.05	15/16	23.81	1 3/4	1 3/4	3/16	4.76	3/16	4.76	1 5/8	41.27
17/32	13.49	3/4	19.05	15/16	23.81	1 3/4	1 3/4	3/16	4.76	3/16	4.76	1 5/8	41.27
9/16	14.29	3/4	19.05	15/16	23.81	1 3/4	1 3/4	3/16	4.76	3/16	4.76	1 5/8	41.27
19/32	15.08	3/4	19.05	15/16	23.81	1 3/4	1 3/4	3/16	4.76	3/16	4.76	1 5/8	41.27
5/8	15.87	3/4	19.05	15/16	23.81	1 3/4	1 3/4	3/16	4.76	3/16	4.76	1 5/8	41.27
21/32	16.67	3/4	19.05	15/16	23.81	1 3/4	1 3/4	3/16	4.76	3/16	4.76	1 5/8	41.27
11/16	17.46	3/4	19.05	15/16	23.81	1 3/4	1 3/4	3/16	4.76	3/16	4.76	1 5/8	41.27
23/32	18.26	3/4	19.05	15/16	23.81	1 3/4	1 3/4	3/16	4.76	3/16	4.76	1 5/8	41.27
3/4	19.05	3/4	19.05	15/16	23.81	1 3/4	1 3/4	3/16	4.76	3/16	4.76	1 5/8	41.27
3/16	4.76	3/4	19.05	31/32	24.61	1 3/4	1 3/4	3/16	4.76	3/16	4.76	1 5/8	41.27
7/32	5.56	3/4	19.05	31/32	24.61	1 3/4	1 3/4	3/16	4.76	3/16	4.76	1 5/8	41.27
1/4	6.35	3/4	19.05	31/32	24.61	1 3/4	1 3/4	3/16	4.76	3/16	4.76	1 5/8	41.27
9/32	7.14	3/4	19.05	31/32	24.61	1 3/4	1 3/4	3/16	4.76	3/16	4.76	1 5/8	41.27
5/16	7.94	3/4	19.05	31/32	24.61	1 3/4	1 3/4	3/16	4.76	3/16	4.76	1 5/8	41.27

www.globaltungsten.com

B		E		D		M	A	L		T		C	
inch	mm	inch	mm	inch	mm	inch	inch	inch	mm	inch	mm	inch	mm
11/32	8.73	3/4	19.05	31/32	24.61	1 3/4	1 3/4	3/16	4.76	3/16	4.76	1 5/8	41.27
3/8	9.52	3/4	19.05	31/32	24.61	1 3/4	1 3/4	3/16	4.76	3/16	4.76	1 5/8	41.27
13/32	10.32	3/4	19.05	31/32	24.61	1 3/4	1 3/4	3/16	4.76	3/16	4.76	1 5/8	41.27
7/16	11.11	3/4	19.05	31/32	24.61	1 3/4	1 3/4	3/16	4.76	3/16	4.76	1 5/8	41.27
15/32	11.91	3/4	19.05	31/32	24.61	1 3/4	1 3/4	3/16	4.76	3/16	4.76	1 5/8	41.27
1/2	12.70	3/4	19.05	31/32	24.61	1 3/4	1 3/4	3/16	4.76	3/16	4.76	1 5/8	41.27
17/32	13.49	3/4	19.05	31/32	24.61	1 3/4	1 3/4	3/16	4.76	3/16	4.76	1 5/8	41.27
9/16	14.29	3/4	19.05	31/32	24.61	1 3/4	1 3/4	3/16	4.76	3/16	4.76	1 5/8	41.27
19/32	15.08	3/4	19.05	31/32	24.61	1 3/4	1 3/4	3/16	4.76	3/16	4.76	1 5/8	41.27
5/8	15.87	3/4	19.05	31/32	24.61	1 3/4	1 3/4	3/16	4.76	3/16	4.76	1 5/8	41.27
21/32	16.67	3/4	19.05	31/32	24.61	1 3/4	1 3/4	3/16	4.76	3/16	4.76	1 5/8	41.27
11/16	17.46	3/4	19.05	31/32	24.61	1 3/4	1 3/4	3/16	4.76	3/16	4.76	1 5/8	41.27
23/32	18.26	3/4	19.05	31/32	24.61	1 3/4	1 3/4	3/16	4.76	3/16	4.76	1 5/8	41.27
3/4	19.05	3/4	19.05	31/32	24.61	1 3/4	1 3/4	3/16	4.76	3/16	4.76	1 5/8	41.27
3/16	4.76	3/4	19.05	1	25.40	1 3/4	1 3/4	3/16	4.76	3/16	4.76	1 5/8	41.27
7/32	5.56	3/4	19.05	1	25.40	1 3/4	1 3/4	3/16	4.76	3/16	4.76	1 5/8	41.27
1/4	6.35	3/4	19.05	1	25.40	1 3/4	1 3/4	3/16	4.76	3/16	4.76	1 5/8	41.27
9/32	7.14	3/4	19.05	1	25.40	1 3/4	1 3/4	3/16	4.76	3/16	4.76	1 5/8	41.27
5/16	7.94	3/4	19.05	1	25.40	1 3/4	1 3/4	3/16	4.76	3/16	4.76	1 5/8	41.27
11/32	8.73	3/4	19.05	1	25.40	1 3/4	1 3/4	3/16	4.76	3/16	4.76	1 5/8	41.27
3/8	9.52	3/4	19.05	1	25.40	1 3/4	1 3/4	3/16	4.76	3/16	4.76	1 5/8	41.27
13/32	10.32	3/4	19.05	1	25.40	1 3/4	1 3/4	3/16	4.76	3/16	4.76	1 5/8	41.27
7/16	11.11	3/4	19.05	1	25.40	1 3/4	1 3/4	3/16	4.76	3/16	4.76	1 5/8	41.27
15/32	11.91	3/4	19.05	1	25.40	1 3/4	1 3/4	3/16	4.76	3/16	4.76	1 5/8	41.27
1/2	12.70	3/4	19.05	1	25.40	1 3/4	1 3/4	3/16	4.76	3/16	4.76	1 5/8	41.27
17/32	13.49	3/4	19.05	1	25.40	1 3/4	1 3/4	3/16	4.76	3/16	4.76	1 5/8	41.27
9/16	14.29	3/4	19.05	1	25.40	1 3/4	1 3/4	3/16	4.76	3/16	4.76	1 5/8	41.27
19/32	15.08	3/4	19.05	1	25.40	1 3/4	1 3/4	3/16	4.76	3/16	4.76	1 5/8	41.27
5/8	15.87	3/4	19.05	1	25.40	1 3/4	1 3/4	3/16	4.76	3/16	4.76	1 5/8	41.27
21/32	16.67	3/4	19.05	1	25.40	1 3/4	1 3/4	3/16	4.76	3/16	4.76	1 5/8	41.27
11/16	17.46	3/4	19.05	1	25.40	1 3/4	1 3/4	3/16	4.76	3/16	4.76	1 5/8	41.27
23/32	18.26	3/4	19.05	1	25.40	1 3/4	1 3/4	3/16	4.76	3/16	4.76	1 5/8	41.27
3/4	19.05	3/4	19.05	1	25.40	1 3/4	1 3/4	3/16	4.76	3/16	4.76	1 5/8	41.27
3/16	4.76	3/4	19.05	1 1/8	28.57	1 3/4	1 3/4	3/16	4.76	3/16	4.76	1 5/8	41.27
7/32	5.56	3/4	19.05	1 1/8	28.57	1 3/4	1 3/4	3/16	4.76	3/16	4.76	1 5/8	41.27
1/4	6.35	3/4	19.05	1 1/8	28.57	1 3/4	1 3/4	3/16	4.76	3/16	4.76	1 5/8	41.27
9/32	7.14	3/4	19.05	1 1/8	28.57	1 3/4	1 3/4	3/16	4.76	3/16	4.76	1 5/8	41.27
5/16	7.94	3/4	19.05	1 1/8	28.57	1 3/4	1 3/4	3/16	4.76	3/16	4.76	1 5/8	41.27
11/32	8.73	3/4	19.05	1 1/8	28.57	1 3/4	1 3/4	3/16	4.76	3/16	4.76	1 5/8	41.27
3/8	9.52	3/4	19.05	1 1/8	28.57	1 3/4	1 3/4	3/16	4.76	3/16	4.76	1 5/8	41.27
13/32	10.32	3/4	19.05	1 1/8	28.57	1 3/4	1 3/4	3/16	4.76	3/16	4.76	1 5/8	41.27
7/16	11.11	3/4	19.05	1 1/8	28.57	1 3/4	1 3/4	3/16	4.76	3/16	4.76	1 5/8	41.27
15/32	11.91	3/4	19.05	1 1/8	28.57	1 3/4	1 3/4	3/16	4.76	3/16	4.76	1 5/8	41.27
1/2	12.70	3/4	19.05	1 1/8	28.57	1 3/4	1 3/4	3/16	4.76	3/16	4.76	1 5/8	41.27
17/32	13.49	3/4	19.05	1 1/8	28.57	1 3/4	1 3/4	3/16	4.76	3/16	4.76	1 5/8	41.27

www.globaltungsten.com

B		E		D		M	A	L		T		C	
inch	mm	inch	mm	inch	mm	inch	inch	inch	mm	inch	mm	inch	mm
9/16	14.29	3/4	19.05	1 1/8	28.57	1 3/4	1 3/4	3/16	4.76	3/16	4.76	1 5/8	41.27
19/32	15.08	3/4	19.05	1 1/8	28.57	1 3/4	1 3/4	3/16	4.76	3/16	4.76	1 5/8	41.27
5/8	15.87	3/4	19.05	1 1/8	28.57	1 3/4	1 3/4	3/16	4.76	3/16	4.76	1 5/8	41.27
21/32	16.67	3/4	19.05	1 1/8	28.57	1 3/4	1 3/4	3/16	4.76	3/16	4.76	1 5/8	41.27
11/16	17.46	3/4	19.05	1 1/8	28.57	1 3/4	1 3/4	3/16	4.76	3/16	4.76	1 5/8	41.27
23/32	18.26	3/4	19.05	1 1/8	28.57	1 3/4	1 3/4	3/16	4.76	3/16	4.76	1 5/8	41.27
3/4	19.05	3/4	19.05	1 1/8	28.57	1 3/4	1 3/4	3/16	4.76	3/16	4.76	1 5/8	41.27
3/16	4.76	3/4	19.05	1 1/4	31.75	1 3/4	1 3/4	3/16	4.76	3/16	4.76	1 5/8	41.27
7/32	5.56	3/4	19.05	1 1/4	31.75	1 3/4	1 3/4	3/16	4.76	3/16	4.76	1 5/8	41.27
1/4	6.35	3/4	19.05	1 1/4	31.75	1 3/4	1 3/4	3/16	4.76	3/16	4.76	1 5/8	41.27
9/32	7.14	3/4	19.05	1 1/4	31.75	1 3/4	1 3/4	3/16	4.76	3/16	4.76	1 5/8	41.27
5/16	7.94	3/4	19.05	1 1/4	31.75	1 3/4	1 3/4	3/16	4.76	3/16	4.76	1 5/8	41.27
11/32	8.73	3/4	19.05	1 1/4	31.75	1 3/4	1 3/4	3/16	4.76	3/16	4.76	1 5/8	41.27
3/8	9.52	3/4	19.05	1 1/4	31.75	1 3/4	1 3/4	3/16	4.76	3/16	4.76	1 5/8	41.27
13/32	10.32	3/4	19.05	1 1/4	31.75	1 3/4	1 3/4	3/16	4.76	3/16	4.76	1 5/8	41.27
7/16	11.11	3/4	19.05	1 1/4	31.75	1 3/4	1 3/4	3/16	4.76	3/16	4.76	1 5/8	41.27
15/32	11.91	3/4	19.05	1 1/4	31.75	1 3/4	1 3/4	3/16	4.76	3/16	4.76	1 5/8	41.27
1/2	12.70	3/4	19.05	1 1/4	31.75	1 3/4	1 3/4	3/16	4.76	3/16	4.76	1 5/8	41.27
17/32	13.49	3/4	19.05	1 1/4	31.75	1 3/4	1 3/4	3/16	4.76	3/16	4.76	1 5/8	41.27
9/16	14.29	3/4	19.05	1 1/4	31.75	1 3/4	1 3/4	3/16	4.76	3/16	4.76	1 5/8	41.27
19/32	15.08	3/4	19.05	1 1/4	31.75	1 3/4	1 3/4	3/16	4.76	3/16	4.76	1 5/8	41.27
5/8	15.87	3/4	19.05	1 1/4	31.75	1 3/4	1 3/4	3/16	4.76	3/16	4.76	1 5/8	41.27
21/32	16.67	3/4	19.05	1 1/4	31.75	1 3/4	1 3/4	3/16	4.76	3/16	4.76	1 5/8	41.27
11/16	17.46	3/4	19.05	1 1/4	31.75	1 3/4	1 3/4	3/16	4.76	3/16	4.76	1 5/8	41.27
23/32	18.26	3/4	19.05	1 1/4	31.75	1 3/4	1 3/4	3/16	4.76	3/16	4.76	1 5/8	41.27
3/4	19.05	3/4	19.05	1 1/4	31.75	1 3/4	1 3/4	3/16	4.76	3/16	4.76	1 5/8	41.27
3/16	4.76	3/4	19.05	1 3/8	34.92	1 3/4	1 3/4	3/16	4.76	3/16	4.76	1 5/8	41.27
7/32	5.56	3/4	19.05	1 3/8	34.92	1 3/4	1 3/4	3/16	4.76	3/16	4.76	1 5/8	41.27
1/4	6.35	3/4	19.05	1 3/8	34.92	1 3/4	1 3/4	3/16	4.76	3/16	4.76	1 5/8	41.27
9/32	7.14	3/4	19.05	1 3/8	34.92	1 3/4	1 3/4	3/16	4.76	3/16	4.76	1 5/8	41.27
5/16	7.94	3/4	19.05	1 3/8	34.92	1 3/4	1 3/4	3/16	4.76	3/16	4.76	1 5/8	41.27
11/32	8.73	3/4	19.05	1 3/8	34.92	1 3/4	1 3/4	3/16	4.76	3/16	4.76	1 5/8	41.27
3/8	9.52	3/4	19.05	1 3/8	34.92	1 3/4	1 3/4	3/16	4.76	3/16	4.76	1 5/8	41.27
13/32	10.32	3/4	19.05	1 3/8	34.92	1 3/4	1 3/4	3/16	4.76	3/16	4.76	1 5/8	41.27
7/16	11.11	3/4	19.05	1 3/8	34.92	1 3/4	1 3/4	3/16	4.76	3/16	4.76	1 5/8	41.27
15/32	11.91	3/4	19.05	1 3/8	34.92	1 3/4	1 3/4	3/16	4.76	3/16	4.76	1 5/8	41.27
1/2	12.70	3/4	19.05	1 3/8	34.92	1 3/4	1 3/4	3/16	4.76	3/16	4.76	1 5/8	41.27
17/32	13.49	3/4	19.05	1 3/8	34.92	1 3/4	1 3/4	3/16	4.76	3/16	4.76	1 5/8	41.27
9/16	14.29	3/4	19.05	1 3/8	34.92	1 3/4	1 3/4	3/16	4.76	3/16	4.76	1 5/8	41.27
19/32	15.08	3/4	19.05	1 3/8	34.92	1 3/4	1 3/4	3/16	4.76	3/16	4.76	1 5/8	41.27
5/8	15.87	3/4	19.05	1 3/8	34.92	1 3/4	1 3/4	3/16	4.76	3/16	4.76	1 5/8	41.27
21/32	16.67	3/4	19.05	1 3/8	34.92	1 3/4	1 3/4	3/16	4.76	3/16	4.76	1 5/8	41.27
11/16	17.46	3/4	19.05	1 3/8	34.92	1 3/4	1 3/4	3/16	4.76	3/16	4.76	1 5/8	41.27
23/32	18.26	3/4	19.05	1 3/8	34.92	1 3/4	1 3/4	3/16	4.76	3/16	4.76	1 5/8	41.27
3/4	19.05	3/4	19.05	1 3/8	34.92	1 3/4	1 3/4	3/16	4.76	3/16	4.76	1 5/8	41.27

www.globaltungsters.com

B		E		D		M	A	L		T		C	
inch	mm	inch	mm	inch	mm	inch	inch	inch	mm	inch	mm	inch	mm
3/16	4.76	3/4	19.05	1 1/2	38.10	1 3/4	1 3/4	3/16	4.76	3/16	4.76	1 5/8	41.27
7/32	5.56	3/4	19.05	1 1/2	38.10	1 3/4	1 3/4	3/16	4.76	3/16	4.76	1 5/8	41.27
1/4	6.35	3/4	19.05	1 1/2	38.10	1 3/4	1 3/4	3/16	4.76	3/16	4.76	1 5/8	41.27
9/32	7.14	3/4	19.05	1 1/2	38.10	1 3/4	1 3/4	3/16	4.76	3/16	4.76	1 5/8	41.27
5/16	7.94	3/4	19.05	1 1/2	38.10	1 3/4	1 3/4	3/16	4.76	3/16	4.76	1 5/8	41.27
11/32	8.73	3/4	19.05	1 1/2	38.10	1 3/4	1 3/4	3/16	4.76	3/16	4.76	1 5/8	41.27
3/8	9.52	3/4	19.05	1 1/2	38.10	1 3/4	1 3/4	3/16	4.76	3/16	4.76	1 5/8	41.27
13/32	10.32	3/4	19.05	1 1/2	38.10	1 3/4	1 3/4	3/16	4.76	3/16	4.76	1 5/8	41.27
7/16	11.11	3/4	19.05	1 1/2	38.10	1 3/4	1 3/4	3/16	4.76	3/16	4.76	1 5/8	41.27
15/32	11.91	3/4	19.05	1 1/2	38.10	1 3/4	1 3/4	3/16	4.76	3/16	4.76	1 5/8	41.27
1/2	12.70	3/4	19.05	1 1/2	38.10	1 3/4	1 3/4	3/16	4.76	3/16	4.76	1 5/8	41.27
17/32	13.49	3/4	19.05	1 1/2	38.10	1 3/4	1 3/4	3/16	4.76	3/16	4.76	1 5/8	41.27
9/16	14.29	3/4	19.05	1 1/2	38.10	1 3/4	1 3/4	3/16	4.76	3/16	4.76	1 5/8	41.27
19/32	15.08	3/4	19.05	1 1/2	38.10	1 3/4	1 3/4	3/16	4.76	3/16	4.76	1 5/8	41.27
5/8	15.87	3/4	19.05	1 1/2	38.10	1 3/4	1 3/4	3/16	4.76	3/16	4.76	1 5/8	41.27
21/32	16.67	3/4	19.05	1 1/2	38.10	1 3/4	1 3/4	3/16	4.76	3/16	4.76	1 5/8	41.27
11/16	17.46	3/4	19.05	1 1/2	38.10	1 3/4	1 3/4	3/16	4.76	3/16	4.76	1 5/8	41.27
23/32	18.26	3/4	19.05	1 1/2	38.10	1 3/4	1 3/4	3/16	4.76	3/16	4.76	1 5/8	41.27
3/4	19.05	3/4	19.05	1 1/2	38.10	1 3/4	1 3/4	3/16	4.76	3/16	4.76	1 5/8	41.27
3/16	4.76	5/8	15.87	25/32	19.84	1 3/4	1 3/4	3/16	4.76	3/16	4.76	1 5/8	41.27
3/16	4.76	5/8	15.87	13/16	20.64	1 3/4	1 3/4	3/16	4.76	3/16	4.76	1 5/8	41.27
3/16	4.76	5/8	15.87	27/32	21.43	1 3/4	1 3/4	3/16	4.76	3/16	4.76	1 5/8	41.27
3/16	4.76	5/8	15.87	7/8	22.22	1 3/4	1 3/4	3/16	4.76	3/16	4.76	1 5/8	41.27
3/16	4.76	5/8	15.87	29/32	23.02	1 3/4	1 3/4	3/16	4.76	3/16	4.76	1 5/8	41.27
3/16	4.76	5/8	15.87	15/16	23.81	1 3/4	1 3/4	3/16	4.76	3/16	4.76	1 5/8	41.27
3/16	4.76	5/8	15.87	31/32	24.61	1 3/4	1 3/4	3/16	4.76	3/16	4.76	1 5/8	41.27
3/16	4.76	5/8	15.87	1	25.40	1 3/4	1 3/4	3/16	4.76	3/16	4.76	1 5/8	41.27
3/16	4.76	5/8	15.87	1 1/8	28.57	1 3/4	1 3/4	3/16	4.76	3/16	4.76	1 5/8	41.27
3/16	4.76	5/8	15.87	1 1/4	31.75	1 3/4	1 3/4	3/16	4.76	3/16	4.76	1 5/8	41.27
3/16	4.76	5/8	15.87	1 3/8	34.92	1 3/4	1 3/4	3/16	4.76	3/16	4.76	1 5/8	41.27
3/16	4.76	5/8	15.87	1 1/2	38.10	1 3/4	1 3/4	3/16	4.76	3/16	4.76	1 5/8	41.27
7/32	5.56	5/8	15.87	25/32	19.84	1 3/4	1 3/4	3/16	4.76	3/16	4.76	1 5/8	41.27
7/32	5.56	5/8	15.87	13/16	20.64	1 3/4	1 3/4	3/16	4.76	3/16	4.76	1 5/8	41.27
7/32	5.56	5/8	15.87	27/32	21.43	1 3/4	1 3/4	3/16	4.76	3/16	4.76	1 5/8	41.27
7/32	5.56	5/8	15.87	7/8	22.22	1 3/4	1 3/4	3/16	4.76	3/16	4.76	1 5/8	41.27
7/32	5.56	5/8	15.87	29/32	23.02	1 3/4	1 3/4	3/16	4.76	3/16	4.76	1 5/8	41.27
7/32	5.56	5/8	15.87	15/16	23.81	1 3/4	1 3/4	3/16	4.76	3/16	4.76	1 5/8	41.27
7/32	5.56	5/8	15.87	31/32	24.61	1 3/4	1 3/4	3/16	4.76	3/16	4.76	1 5/8	41.27
7/32	5.56	5/8	15.87	1	25.40	1 3/4	1 3/4	3/16	4.76	3/16	4.76	1 5/8	41.27
7/32	5.56	5/8	15.87	1 1/8	28.57	1 3/4	1 3/4	3/16	4.76	3/16	4.76	1 5/8	41.27
7/32	5.56	5/8	15.87	1 1/4	31.75	1 3/4	1 3/4	3/16	4.76	3/16	4.76	1 5/8	41.27
7/32	5.56	5/8	15.87	1 3/8	34.92	1 3/4	1 3/4	3/16	4.76	3/16	4.76	1 5/8	41.27
7/32	5.56	5/8	15.87	1 1/2	38.10	1 3/4	1 3/4	3/16	4.76	3/16	4.76	1 5/8	41.27
1/4	6.35	5/8	15.87	25/32	19.84	1 3/4	1 3/4	3/16	4.76	3/16	4.76	1 5/8	41.27
1/4	6.35	5/8	15.87	13/16	20.64	1 3/4	1 3/4	3/16	4.76	3/16	4.76	1 5/8	41.27

www.globaltungsten.com

B		E		D		M	A	L		T		C	
inch	mm	inch	mm	inch	mm	inch	inch	inch	mm	inch	mm	inch	mm
1/4	6.35	5/8	15.87	27/32	21.43	1 3/4	1 3/4	3/16	4.76	3/16	4.76	1 5/8	41.27
1/4	6.35	5/8	15.87	7/8	22.22	1 3/4	1 3/4	3/16	4.76	3/16	4.76	1 5/8	41.27
1/4	6.35	5/8	15.87	29/32	23.02	1 3/4	1 3/4	3/16	4.76	3/16	4.76	1 5/8	41.27
1/4	6.35	5/8	15.87	15/16	23.81	1 3/4	1 3/4	3/16	4.76	3/16	4.76	1 5/8	41.27
1/4	6.35	5/8	15.87	31/32	24.61	1 3/4	1 3/4	3/16	4.76	3/16	4.76	1 5/8	41.27
1/4	6.35	5/8	15.87	1	25.40	1 3/4	1 3/4	3/16	4.76	3/16	4.76	1 5/8	41.27
1/4	6.35	5/8	15.87	1 1/8	28.57	1 3/4	1 3/4	3/16	4.76	3/16	4.76	1 5/8	41.27
1/4	6.35	5/8	15.87	1 1/4	31.75	1 3/4	1 3/4	3/16	4.76	3/16	4.76	1 5/8	41.27
1/4	6.35	5/8	15.87	1 3/8	34.92	1 3/4	1 3/4	3/16	4.76	3/16	4.76	1 5/8	41.27
1/4	6.35	5/8	15.87	1 1/2	38.10	1 3/4	1 3/4	3/16	4.76	3/16	4.76	1 5/8	41.27
9/32	7.14	5/8	15.87	25/32	19.84	1 3/4	1 3/4	3/16	4.76	3/16	4.76	1 5/8	41.27
9/32	7.14	5/8	15.87	13/16	20.64	1 3/4	1 3/4	3/16	4.76	3/16	4.76	1 5/8	41.27
9/32	7.14	5/8	15.87	27/32	21.43	1 3/4	1 3/4	3/16	4.76	3/16	4.76	1 5/8	41.27
9/32	7.14	5/8	15.87	7/8	22.22	1 3/4	1 3/4	3/16	4.76	3/16	4.76	1 5/8	41.27
9/32	7.14	5/8	15.87	29/32	23.02	1 3/4	1 3/4	3/16	4.76	3/16	4.76	1 5/8	41.27
9/32	7.14	5/8	15.87	15/16	23.81	1 3/4	1 3/4	3/16	4.76	3/16	4.76	1 5/8	41.27
9/32	7.14	5/8	15.87	31/32	24.61	1 3/4	1 3/4	3/16	4.76	3/16	4.76	1 5/8	41.27
9/32	7.14	5/8	15.87	1	25.40	1 3/4	1 3/4	3/16	4.76	3/16	4.76	1 5/8	41.27
9/32	7.14	5/8	15.87	1 1/8	28.57	1 3/4	1 3/4	3/16	4.76	3/16	4.76	1 5/8	41.27
9/32	7.14	5/8	15.87	1 1/4	31.75	1 3/4	1 3/4	3/16	4.76	3/16	4.76	1 5/8	41.27
9/32	7.14	5/8	15.87	1 3/8	34.92	1 3/4	1 3/4	3/16	4.76	3/16	4.76	1 5/8	41.27
9/32	7.14	5/8	15.87	1 1/2	38.10	1 3/4	1 3/4	3/16	4.76	3/16	4.76	1 5/8	41.27
5/16	7.94	5/8	15.87	25/32	19.84	1 3/4	1 3/4	3/16	4.76	3/16	4.76	1 5/8	41.27
5/16	7.94	5/8	15.87	13/16	20.64	1 3/4	1 3/4	3/16	4.76	3/16	4.76	1 5/8	41.27
5/16	7.94	5/8	15.87	27/32	21.43	1 3/4	1 3/4	3/16	4.76	3/16	4.76	1 5/8	41.27
5/16	7.94	5/8	15.87	7/8	22.22	1 3/4	1 3/4	3/16	4.76	3/16	4.76	1 5/8	41.27
5/16	7.94	5/8	15.87	29/32	23.02	1 3/4	1 3/4	3/16	4.76	3/16	4.76	1 5/8	41.27
5/16	7.94	5/8	15.87	15/16	23.81	1 3/4	1 3/4	3/16	4.76	3/16	4.76	1 5/8	41.27
5/16	7.94	5/8	15.87	31/32	24.61	1 3/4	1 3/4	3/16	4.76	3/16	4.76	1 5/8	41.27
5/16	7.94	5/8	15.87	1	25.40	1 3/4	1 3/4	3/16	4.76	3/16	4.76	1 5/8	41.27
5/16	7.94	5/8	15.87	1 1/8	28.57	1 3/4	1 3/4	3/16	4.76	3/16	4.76	1 5/8	41.27
5/16	7.94	5/8	15.87	1 1/4	31.75	1 3/4	1 3/4	3/16	4.76	3/16	4.76	1 5/8	41.27
5/16	7.94	5/8	15.87	1 3/8	34.92	1 3/4	1 3/4	3/16	4.76	3/16	4.76	1 5/8	41.27
5/16	7.94	5/8	15.87	1 1/2	38.10	1 3/4	1 3/4	3/16	4.76	3/16	4.76	1 5/8	41.27
11/32	8.73	5/8	15.87	25/32	19.84	1 3/4	1 3/4	3/16	4.76	3/16	4.76	1 5/8	41.27
11/32	8.73	5/8	15.87	13/16	20.64	1 3/4	1 3/4	3/16	4.76	3/16	4.76	1 5/8	41.27
11/32	8.73	5/8	15.87	27/32	21.43	1 3/4	1 3/4	3/16	4.76	3/16	4.76	1 5/8	41.27
11/32	8.73	5/8	15.87	7/8	22.22	1 3/4	1 3/4	3/16	4.76	3/16	4.76	1 5/8	41.27
11/32	8.73	5/8	15.87	29/32	23.02	1 3/4	1 3/4	3/16	4.76	3/16	4.76	1 5/8	41.27
11/32	8.73	5/8	15.87	15/16	23.81	1 3/4	1 3/4	3/16	4.76	3/16	4.76	1 5/8	41.27
11/32	8.73	5/8	15.87	31/32	24.61	1 3/4	1 3/4	3/16	4.76	3/16	4.76	1 5/8	41.27
11/32	8.73	5/8	15.87	1	25.40	1 3/4	1 3/4	3/16	4.76	3/16	4.76	1 5/8	41.27
11/32	8.73	5/8	15.87	1 1/8	28.57	1 3/4	1 3/4	3/16	4.76	3/16	4.76	1 5/8	41.27
11/32	8.73	5/8	15.87	1 1/4	31.75	1 3/4	1 3/4	3/16	4.76	3/16	4.76	1 5/8	41.27
11/32	8.73	5/8	15.87	1 3/8	34.92	1 3/4	1 3/4	3/16	4.76	3/16	4.76	1 5/8	41.27

www.globaltungsten.com

B		E		D		M	A	L		T		C	
inch	mm	inch	mm	inch	mm	inch	inch	inch	mm	inch	mm	inch	mm
11/32	8.73	5/8	15.87	1 1/2	38.10	1 3/4	1 3/4	3/16	4.76	3/16	4.76	1 5/8	41.27
3/8	9.52	5/8	15.87	25/32	19.84	1 3/4	1 3/4	3/16	4.76	3/16	4.76	1 5/8	41.27
3/8	9.52	5/8	15.87	13/16	20.64	1 3/4	1 3/4	3/16	4.76	3/16	4.76	1 5/8	41.27
3/8	9.52	5/8	15.87	27/32	21.43	1 3/4	1 3/4	3/16	4.76	3/16	4.76	1 5/8	41.27
3/8	9.52	5/8	15.87	7/8	22.22	1 3/4	1 3/4	3/16	4.76	3/16	4.76	1 5/8	41.27
3/8	9.52	5/8	15.87	29/32	23.02	1 3/4	1 3/4	3/16	4.76	3/16	4.76	1 5/8	41.27
3/8	9.52	5/8	15.87	15/16	23.81	1 3/4	1 3/4	3/16	4.76	3/16	4.76	1 5/8	41.27
3/8	9.52	5/8	15.87	31/32	24.61	1 3/4	1 3/4	3/16	4.76	3/16	4.76	1 5/8	41.27
3/8	9.52	5/8	15.87	1	25.40	1 3/4	1 3/4	3/16	4.76	3/16	4.76	1 5/8	41.27
3/8	9.52	5/8	15.87	1 1/8	28.57	1 3/4	1 3/4	3/16	4.76	3/16	4.76	1 5/8	41.27
3/8	9.52	5/8	15.87	1 1/4	31.75	1 3/4	1 3/4	3/16	4.76	3/16	4.76	1 5/8	41.27
3/8	9.52	5/8	15.87	1 3/8	34.92	1 3/4	1 3/4	3/16	4.76	3/16	4.76	1 5/8	41.27
3/8	9.52	5/8	15.87	1 1/2	38.10	1 3/4	1 3/4	3/16	4.76	3/16	4.76	1 5/8	41.27
13/32	10.32	5/8	15.87	25/32	19.84	1 3/4	1 3/4	3/16	4.76	3/16	4.76	1 5/8	41.27
13/32	10.32	5/8	15.87	13/16	20.64	1 3/4	1 3/4	3/16	4.76	3/16	4.76	1 5/8	41.27
13/32	10.32	5/8	15.87	27/32	21.43	1 3/4	1 3/4	3/16	4.76	3/16	4.76	1 5/8	41.27
13/32	10.32	5/8	15.87	7/8	22.22	1 3/4	1 3/4	3/16	4.76	3/16	4.76	1 5/8	41.27
13/32	10.32	5/8	15.87	29/32	23.02	1 3/4	1 3/4	3/16	4.76	3/16	4.76	1 5/8	41.27
13/32	10.32	5/8	15.87	15/16	23.81	1 3/4	1 3/4	3/16	4.76	3/16	4.76	1 5/8	41.27
13/32	10.32	5/8	15.87	31/32	24.61	1 3/4	1 3/4	3/16	4.76	3/16	4.76	1 5/8	41.27
13/32	10.32	5/8	15.87	1	25.40	1 3/4	1 3/4	3/16	4.76	3/16	4.76	1 5/8	41.27
13/32	10.32	5/8	15.87	1 1/8	28.57	1 3/4	1 3/4	3/16	4.76	3/16	4.76	1 5/8	41.27
13/32	10.32	5/8	15.87	1 1/4	31.75	1 3/4	1 3/4	3/16	4.76	3/16	4.76	1 5/8	41.27
13/32	10.32	5/8	15.87	1 3/8	34.92	1 3/4	1 3/4	3/16	4.76	3/16	4.76	1 5/8	41.27
13/32	10.32	5/8	15.87	1 1/2	38.10	1 3/4	1 3/4	3/16	4.76	3/16	4.76	1 5/8	41.27
7/16	11.11	5/8	15.87	25/32	19.84	1 3/4	1 3/4	3/16	4.76	3/16	4.76	1 5/8	41.27
7/16	11.11	5/8	15.87	13/16	20.64	1 3/4	1 3/4	3/16	4.76	3/16	4.76	1 5/8	41.27
7/16	11.11	5/8	15.87	27/32	21.43	1 3/4	1 3/4	3/16	4.76	3/16	4.76	1 5/8	41.27
7/16	11.11	5/8	15.87	7/8	22.22	1 3/4	1 3/4	3/16	4.76	3/16	4.76	1 5/8	41.27
7/16	11.11	5/8	15.87	29/32	23.02	1 3/4	1 3/4	3/16	4.76	3/16	4.76	1 5/8	41.27
7/16	11.11	5/8	15.87	15/16	23.81	1 3/4	1 3/4	3/16	4.76	3/16	4.76	1 5/8	41.27
7/16	11.11	5/8	15.87	31/32	24.61	1 3/4	1 3/4	3/16	4.76	3/16	4.76	1 5/8	41.27
7/16	11.11	5/8	15.87	1	25.40	1 3/4	1 3/4	3/16	4.76	3/16	4.76	1 5/8	41.27
7/16	11.11	5/8	15.87	1 1/8	28.57	1 3/4	1 3/4	3/16	4.76	3/16	4.76	1 5/8	41.27
7/16	11.11	5/8	15.87	1 1/4	31.75	1 3/4	1 3/4	3/16	4.76	3/16	4.76	1 5/8	41.27
7/16	11.11	5/8	15.87	1 3/8	34.92	1 3/4	1 3/4	3/16	4.76	3/16	4.76	1 5/8	41.27
7/16	11.11	5/8	15.87	1 1/2	38.10	1 3/4	1 3/4	3/16	4.76	3/16	4.76	1 5/8	41.27
15/32	11.91	5/8	15.87	25/32	19.84	1 3/4	1 3/4	3/16	4.76	3/16	4.76	1 5/8	41.27
15/32	11.91	5/8	15.87	13/16	20.64	1 3/4	1 3/4	3/16	4.76	3/16	4.76	1 5/8	41.27
15/32	11.91	5/8	15.87	27/32	21.43	1 3/4	1 3/4	3/16	4.76	3/16	4.76	1 5/8	41.27
15/32	11.91	5/8	15.87	7/8	22.22	1 3/4	1 3/4	3/16	4.76	3/16	4.76	1 5/8	41.27
15/32	11.91	5/8	15.87	29/32	23.02	1 3/4	1 3/4	3/16	4.76	3/16	4.76	1 5/8	41.27
15/32	11.91	5/8	15.87	15/16	23.81	1 3/4	1 3/4	3/16	4.76	3/16	4.76	1 5/8	41.27
15/32	11.91	5/8	15.87	31/32	24.61	1 3/4	1 3/4	3/16	4.76	3/16	4.76	1 5/8	41.27
15/32	11.91	5/8	15.87	1	25.40	1 3/4	1 3/4	3/16	4.76	3/16	4.76	1 5/8	41.27

www.globaltungsteins.com

B		E		D		M	A	L		T		C	
inch	mm	inch	mm	inch	mm	inch	inch	inch	mm	inch	mm	inch	mm
15/32	11.91	5/8	15.87	1 1/8	28.57	1 3/4	1 3/4	3/16	4.76	3/16	4.76	1 5/8	41.27
15/32	11.91	5/8	15.87	1 1/4	31.75	1 3/4	1 3/4	3/16	4.76	3/16	4.76	1 5/8	41.27
15/32	11.91	5/8	15.87	1 3/8	34.92	1 3/4	1 3/4	3/16	4.76	3/16	4.76	1 5/8	41.27
15/32	11.91	5/8	15.87	1 1/2	38.10	1 3/4	1 3/4	3/16	4.76	3/16	4.76	1 5/8	41.27
1/2	12.70	5/8	15.87	25/32	19.84	1 3/4	1 3/4	3/16	4.76	3/16	4.76	1 5/8	41.27
1/2	12.70	5/8	15.87	13/16	20.64	1 3/4	1 3/4	3/16	4.76	3/16	4.76	1 5/8	41.27
1/2	12.70	5/8	15.87	27/32	21.43	1 3/4	1 3/4	3/16	4.76	3/16	4.76	1 5/8	41.27
1/2	12.70	5/8	15.87	7/8	22.22	1 3/4	1 3/4	3/16	4.76	3/16	4.76	1 5/8	41.27
1/2	12.70	5/8	15.87	29/32	23.02	1 3/4	1 3/4	3/16	4.76	3/16	4.76	1 5/8	41.27
1/2	12.70	5/8	15.87	15/16	23.81	1 3/4	1 3/4	3/16	4.76	3/16	4.76	1 5/8	41.27
1/2	12.70	5/8	15.87	31/32	24.61	1 3/4	1 3/4	3/16	4.76	3/16	4.76	1 5/8	41.27
1/2	12.70	5/8	15.87	1	25.40	1 3/4	1 3/4	3/16	4.76	3/16	4.76	1 5/8	41.27
1/2	12.70	5/8	15.87	1 1/8	28.57	1 3/4	1 3/4	3/16	4.76	3/16	4.76	1 5/8	41.27
1/2	12.70	5/8	15.87	1 1/4	31.75	1 3/4	1 3/4	3/16	4.76	3/16	4.76	1 5/8	41.27
1/2	12.70	5/8	15.87	1 3/8	34.92	1 3/4	1 3/4	3/16	4.76	3/16	4.76	1 5/8	41.27
1/2	12.70	5/8	15.87	1 1/2	38.10	1 3/4	1 3/4	3/16	4.76	3/16	4.76	1 5/8	41.27
17/32	13.49	5/8	15.87	25/32	19.84	1 3/4	1 3/4	3/16	4.76	3/16	4.76	1 5/8	41.27
17/32	13.49	5/8	15.87	13/16	20.64	1 3/4	1 3/4	3/16	4.76	3/16	4.76	1 5/8	41.27
17/32	13.49	5/8	15.87	27/32	21.43	1 3/4	1 3/4	3/16	4.76	3/16	4.76	1 5/8	41.27
17/32	13.49	5/8	15.87	7/8	22.22	1 3/4	1 3/4	3/16	4.76	3/16	4.76	1 5/8	41.27
17/32	13.49	5/8	15.87	29/32	23.02	1 3/4	1 3/4	3/16	4.76	3/16	4.76	1 5/8	41.27
17/32	13.49	5/8	15.87	15/16	23.81	1 3/4	1 3/4	3/16	4.76	3/16	4.76	1 5/8	41.27
17/32	13.49	5/8	15.87	31/32	24.61	1 3/4	1 3/4	3/16	4.76	3/16	4.76	1 5/8	41.27
17/32	13.49	5/8	15.87	1	25.40	1 3/4	1 3/4	3/16	4.76	3/16	4.76	1 5/8	41.27
17/32	13.49	5/8	15.87	1 1/8	28.57	1 3/4	1 3/4	3/16	4.76	3/16	4.76	1 5/8	41.27
17/32	13.49	5/8	15.87	1 1/4	31.75	1 3/4	1 3/4	3/16	4.76	3/16	4.76	1 5/8	41.27
17/32	13.49	5/8	15.87	1 3/8	34.92	1 3/4	1 3/4	3/16	4.76	3/16	4.76	1 5/8	41.27
17/32	13.49	5/8	15.87	1 1/2	38.10	1 3/4	1 3/4	3/16	4.76	3/16	4.76	1 5/8	41.27
9/16	14.29	5/8	15.87	25/32	19.84	1 3/4	1 3/4	3/16	4.76	3/16	4.76	1 5/8	41.27
9/16	14.29	5/8	15.87	13/16	20.64	1 3/4	1 3/4	3/16	4.76	3/16	4.76	1 5/8	41.27
9/16	14.29	5/8	15.87	27/32	21.43	1 3/4	1 3/4	3/16	4.76	3/16	4.76	1 5/8	41.27
9/16	14.29	5/8	15.87	7/8	22.22	1 3/4	1 3/4	3/16	4.76	3/16	4.76	1 5/8	41.27
9/16	14.29	5/8	15.87	29/32	23.02	1 3/4	1 3/4	3/16	4.76	3/16	4.76	1 5/8	41.27
9/16	14.29	5/8	15.87	15/16	23.81	1 3/4	1 3/4	3/16	4.76	3/16	4.76	1 5/8	41.27
9/16	14.29	5/8	15.87	31/32	24.61	1 3/4	1 3/4	3/16	4.76	3/16	4.76	1 5/8	41.27
9/16	14.29	5/8	15.87	1	25.40	1 3/4	1 3/4	3/16	4.76	3/16	4.76	1 5/8	41.27
9/16	14.29	5/8	15.87	1 1/8	28.57	1 3/4	1 3/4	3/16	4.76	3/16	4.76	1 5/8	41.27
9/16	14.29	5/8	15.87	1 1/4	31.75	1 3/4	1 3/4	3/16	4.76	3/16	4.76	1 5/8	41.27
9/16	14.29	5/8	15.87	1 3/8	34.92	1 3/4	1 3/4	3/16	4.76	3/16	4.76	1 5/8	41.27
9/16	14.29	5/8	15.87	1 1/2	38.10	1 3/4	1 3/4	3/16	4.76	3/16	4.76	1 5/8	41.27
19/32	15.08	5/8	15.87	25/32	19.84	1 3/4	1 3/4	3/16	4.76	3/16	4.76	1 5/8	41.27
19/32	15.08	5/8	15.87	13/16	20.64	1 3/4	1 3/4	3/16	4.76	3/16	4.76	1 5/8	41.27
19/32	15.08	5/8	15.87	27/32	21.43	1 3/4	1 3/4	3/16	4.76	3/16	4.76	1 5/8	41.27
19/32	15.08	5/8	15.87	7/8	22.22	1 3/4	1 3/4	3/16	4.76	3/16	4.76	1 5/8	41.27
19/32	15.08	5/8	15.87	29/32	23.02	1 3/4	1 3/4	3/16	4.76	3/16	4.76	1 5/8	41.27

www.globaltungsteins.com

B		E		D		M	A	L		T		C	
inch	mm	inch	mm	inch	mm	inch	inch	inch	mm	inch	mm	inch	mm
19/32	15.08	5/8	15.87	15/16	23.81	1 3/4	1 3/4	3/16	4.76	3/16	4.76	1 5/8	41.27
19/32	15.08	5/8	15.87	31/32	24.61	1 3/4	1 3/4	3/16	4.76	3/16	4.76	1 5/8	41.27
19/32	15.08	5/8	15.87	1	25.40	1 3/4	1 3/4	3/16	4.76	3/16	4.76	1 5/8	41.27
19/32	15.08	5/8	15.87	1 1/8	28.57	1 3/4	1 3/4	3/16	4.76	3/16	4.76	1 5/8	41.27
19/32	15.08	5/8	15.87	1 1/4	31.75	1 3/4	1 3/4	3/16	4.76	3/16	4.76	1 5/8	41.27
19/32	15.08	5/8	15.87	1 3/8	34.92	1 3/4	1 3/4	3/16	4.76	3/16	4.76	1 5/8	41.27
19/32	15.08	5/8	15.87	1 1/2	38.10	1 3/4	1 3/4	3/16	4.76	3/16	4.76	1 5/8	41.27
5/8	15.87	5/8	15.87	25/32	19.84	1 3/4	1 3/4	3/16	4.76	3/16	4.76	1 5/8	41.27
5/8	15.87	5/8	15.87	13/16	20.64	1 3/4	1 3/4	3/16	4.76	3/16	4.76	1 5/8	41.27
5/8	15.87	5/8	15.87	27/32	21.43	1 3/4	1 3/4	3/16	4.76	3/16	4.76	1 5/8	41.27
5/8	15.87	5/8	15.87	7/8	22.22	1 3/4	1 3/4	3/16	4.76	3/16	4.76	1 5/8	41.27
5/8	15.87	5/8	15.87	29/32	23.02	1 3/4	1 3/4	3/16	4.76	3/16	4.76	1 5/8	41.27
5/8	15.87	5/8	15.87	15/16	23.81	1 3/4	1 3/4	3/16	4.76	3/16	4.76	1 5/8	41.27
5/8	15.87	5/8	15.87	31/32	24.61	1 3/4	1 3/4	3/16	4.76	3/16	4.76	1 5/8	41.27
5/8	15.87	5/8	15.87	1	25.40	1 3/4	1 3/4	3/16	4.76	3/16	4.76	1 5/8	41.27
5/8	15.87	5/8	15.87	1 1/8	28.57	1 3/4	1 3/4	3/16	4.76	3/16	4.76	1 5/8	41.27
5/8	15.87	5/8	15.87	1 1/4	31.75	1 3/4	1 3/4	3/16	4.76	3/16	4.76	1 5/8	41.27
5/8	15.87	5/8	15.87	1 3/8	34.92	1 3/4	1 3/4	3/16	4.76	3/16	4.76	1 5/8	41.27
5/8	15.87	5/8	15.87	1 1/2	38.10	1 3/4	1 3/4	3/16	4.76	3/16	4.76	1 5/8	41.27
3/16	4.76	1/2	12.70	21/32	16.67	1 3/4	1 3/4	3/16	4.76	3/16	4.76	1 5/8	41.27
3/16	4.76	1/2	12.70	11/16	17.46	1 3/4	1 3/4	3/16	4.76	3/16	4.76	1 5/8	41.27
3/16	4.76	1/2	12.70	23/32	18.26	1 3/4	1 3/4	3/16	4.76	3/16	4.76	1 5/8	41.27
3/16	4.76	1/2	12.70	3/4	19.05	1 3/4	1 3/4	3/16	4.76	3/16	4.76	1 5/8	41.27
3/16	4.76	1/2	12.70	25/32	19.84	1 3/4	1 3/4	3/16	4.76	3/16	4.76	1 5/8	41.27
3/16	4.76	1/2	12.70	13/16	20.64	1 3/4	1 3/4	3/16	4.76	3/16	4.76	1 5/8	41.27
3/16	4.76	1/2	12.70	27/32	21.43	1 3/4	1 3/4	3/16	4.76	3/16	4.76	1 5/8	41.27
3/16	4.76	1/2	12.70	7/8	22.22	1 3/4	1 3/4	3/16	4.76	3/16	4.76	1 5/8	41.27
3/16	4.76	1/2	12.70	29/32	23.02	1 3/4	1 3/4	3/16	4.76	3/16	4.76	1 5/8	41.27
3/16	4.76	1/2	12.70	15/16	23.81	1 3/4	1 3/4	3/16	4.76	3/16	4.76	1 5/8	41.27
3/16	4.76	1/2	12.70	31/32	24.61	1 3/4	1 3/4	3/16	4.76	3/16	4.76	1 5/8	41.27
3/16	4.76	1/2	12.70	1	25.40	1 3/4	1 3/4	3/16	4.76	3/16	4.76	1 5/8	41.27
3/16	4.76	1/2	12.70	1 1/8	28.57	1 3/4	1 3/4	3/16	4.76	3/16	4.76	1 5/8	41.27
3/16	4.76	1/2	12.70	1 1/4	31.75	1 3/4	1 3/4	3/16	4.76	3/16	4.76	1 5/8	41.27
3/16	4.76	1/2	12.70	1 3/8	34.92	1 3/4	1 3/4	3/16	4.76	3/16	4.76	1 5/8	41.27
3/16	4.76	1/2	12.70	1 1/2	38.10	1 3/4	1 3/4	3/16	4.76	3/16	4.76	1 5/8	41.27
7/32	5.56	1/2	12.70	21/32	16.67	1 3/4	1 3/4	3/16	4.76	3/16	4.76	1 5/8	41.27
7/32	5.56	1/2	12.70	11/16	17.46	1 3/4	1 3/4	3/16	4.76	3/16	4.76	1 5/8	41.27
7/32	5.56	1/2	12.70	23/32	18.26	1 3/4	1 3/4	3/16	4.76	3/16	4.76	1 5/8	41.27
7/32	5.56	1/2	12.70	3/4	19.05	1 3/4	1 3/4	3/16	4.76	3/16	4.76	1 5/8	41.27
7/32	5.56	1/2	12.70	25/32	19.84	1 3/4	1 3/4	3/16	4.76	3/16	4.76	1 5/8	41.27
7/32	5.56	1/2	12.70	13/16	20.64	1 3/4	1 3/4	3/16	4.76	3/16	4.76	1 5/8	41.27
7/32	5.56	1/2	12.70	27/32	21.43	1 3/4	1 3/4	3/16	4.76	3/16	4.76	1 5/8	41.27
7/32	5.56	1/2	12.70	7/8	22.22	1 3/4	1 3/4	3/16	4.76	3/16	4.76	1 5/8	41.27
7/32	5.56	1/2	12.70	29/32	23.02	1 3/4	1 3/4	3/16	4.76	3/16	4.76	1 5/8	41.27
7/32	5.56	1/2	12.70	15/16	23.81	1 3/4	1 3/4	3/16	4.76	3/16	4.76	1 5/8	41.27

www.globaltungsten.com

B		E		D		M	A	L		T		C	
inch	mm	inch	mm	inch	mm	inch	inch	inch	mm	inch	mm	inch	mm
7/32	5.56	1/2	12.70	31/32	24.61	1 3/4	1 3/4	3/16	4.76	3/16	4.76	1 5/8	41.27
7/32	5.56	1/2	12.70	1	25.40	1 3/4	1 3/4	3/16	4.76	3/16	4.76	1 5/8	41.27
7/32	5.56	1/2	12.70	1 1/8	28.57	1 3/4	1 3/4	3/16	4.76	3/16	4.76	1 5/8	41.27
7/32	5.56	1/2	12.70	1 1/4	31.75	1 3/4	1 3/4	3/16	4.76	3/16	4.76	1 5/8	41.27
7/32	5.56	1/2	12.70	1 3/8	34.92	1 3/4	1 3/4	3/16	4.76	3/16	4.76	1 5/8	41.27
7/32	5.56	1/2	12.70	1 1/2	38.10	1 3/4	1 3/4	3/16	4.76	3/16	4.76	1 5/8	41.27
1/4	6.35	1/2	12.70	21/32	16.67	1 3/4	1 3/4	3/16	4.76	3/16	4.76	1 5/8	41.27
1/4	6.35	1/2	12.70	11/16	17.46	1 3/4	1 3/4	3/16	4.76	3/16	4.76	1 5/8	41.27
1/4	6.35	1/2	12.70	23/32	18.26	1 3/4	1 3/4	3/16	4.76	3/16	4.76	1 5/8	41.27
1/4	6.35	1/2	12.70	3/4	19.05	1 3/4	1 3/4	3/16	4.76	3/16	4.76	1 5/8	41.27
1/4	6.35	1/2	12.70	25/32	19.84	1 3/4	1 3/4	3/16	4.76	3/16	4.76	1 5/8	41.27
1/4	6.35	1/2	12.70	13/16	20.64	1 3/4	1 3/4	3/16	4.76	3/16	4.76	1 5/8	41.27
1/4	6.35	1/2	12.70	27/32	21.43	1 3/4	1 3/4	3/16	4.76	3/16	4.76	1 5/8	41.27
1/4	6.35	1/2	12.70	7/8	22.22	1 3/4	1 3/4	3/16	4.76	3/16	4.76	1 5/8	41.27
1/4	6.35	1/2	12.70	29/32	23.02	1 3/4	1 3/4	3/16	4.76	3/16	4.76	1 5/8	41.27
1/4	6.35	1/2	12.70	15/16	23.81	1 3/4	1 3/4	3/16	4.76	3/16	4.76	1 5/8	41.27
1/4	6.35	1/2	12.70	31/32	24.61	1 3/4	1 3/4	3/16	4.76	3/16	4.76	1 5/8	41.27
1/4	6.35	1/2	12.70	1	25.40	1 3/4	1 3/4	3/16	4.76	3/16	4.76	1 5/8	41.27
1/4	6.35	1/2	12.70	1 1/8	28.57	1 3/4	1 3/4	3/16	4.76	3/16	4.76	1 5/8	41.27
1/4	6.35	1/2	12.70	1 1/4	31.75	1 3/4	1 3/4	3/16	4.76	3/16	4.76	1 5/8	41.27
1/4	6.35	1/2	12.70	1 3/8	34.92	1 3/4	1 3/4	3/16	4.76	3/16	4.76	1 5/8	41.27
1/4	6.35	1/2	12.70	1 1/2	38.10	1 3/4	1 3/4	3/16	4.76	3/16	4.76	1 5/8	41.27
9/32	7.14	1/2	12.70	21/32	16.67	1 3/4	1 3/4	3/16	4.76	3/16	4.76	1 5/8	41.27
9/32	7.14	1/2	12.70	11/16	17.46	1 3/4	1 3/4	3/16	4.76	3/16	4.76	1 5/8	41.27
9/32	7.14	1/2	12.70	23/32	18.26	1 3/4	1 3/4	3/16	4.76	3/16	4.76	1 5/8	41.27
9/32	7.14	1/2	12.70	3/4	19.05	1 3/4	1 3/4	3/16	4.76	3/16	4.76	1 5/8	41.27
9/32	7.14	1/2	12.70	25/32	19.84	1 3/4	1 3/4	3/16	4.76	3/16	4.76	1 5/8	41.27
9/32	7.14	1/2	12.70	13/16	20.64	1 3/4	1 3/4	3/16	4.76	3/16	4.76	1 5/8	41.27
9/32	7.14	1/2	12.70	27/32	21.43	1 3/4	1 3/4	3/16	4.76	3/16	4.76	1 5/8	41.27
9/32	7.14	1/2	12.70	7/8	22.22	1 3/4	1 3/4	3/16	4.76	3/16	4.76	1 5/8	41.27
9/32	7.14	1/2	12.70	29/32	23.02	1 3/4	1 3/4	3/16	4.76	3/16	4.76	1 5/8	41.27
9/32	7.14	1/2	12.70	15/16	23.81	1 3/4	1 3/4	3/16	4.76	3/16	4.76	1 5/8	41.27
9/32	7.14	1/2	12.70	31/32	24.61	1 3/4	1 3/4	3/16	4.76	3/16	4.76	1 5/8	41.27
9/32	7.14	1/2	12.70	1	25.40	1 3/4	1 3/4	3/16	4.76	3/16	4.76	1 5/8	41.27
9/32	7.14	1/2	12.70	1 1/8	28.57	1 3/4	1 3/4	3/16	4.76	3/16	4.76	1 5/8	41.27
9/32	7.14	1/2	12.70	1 1/4	31.75	1 3/4	1 3/4	3/16	4.76	3/16	4.76	1 5/8	41.27
9/32	7.14	1/2	12.70	1 3/8	34.92	1 3/4	1 3/4	3/16	4.76	3/16	4.76	1 5/8	41.27
9/32	7.14	1/2	12.70	1 1/2	38.10	1 3/4	1 3/4	3/16	4.76	3/16	4.76	1 5/8	41.27
5/16	7.94	1/2	12.70	21/32	16.67	1 3/4	1 3/4	3/16	4.76	3/16	4.76	1 5/8	41.27
5/16	7.94	1/2	12.70	11/16	17.46	1 3/4	1 3/4	3/16	4.76	3/16	4.76	1 5/8	41.27
5/16	7.94	1/2	12.70	23/32	18.26	1 3/4	1 3/4	3/16	4.76	3/16	4.76	1 5/8	41.27
5/16	7.94	1/2	12.70	3/4	19.05	1 3/4	1 3/4	3/16	4.76	3/16	4.76	1 5/8	41.27
5/16	7.94	1/2	12.70	25/32	19.84	1 3/4	1 3/4	3/16	4.76	3/16	4.76	1 5/8	41.27
5/16	7.94	1/2	12.70	13/16	20.64	1 3/4	1 3/4	3/16	4.76	3/16	4.76	1 5/8	41.27
5/16	7.94	1/2	12.70	27/32	21.43	1 3/4	1 3/4	3/16	4.76	3/16	4.76	1 5/8	41.27

www.globaltungsteels.com

B		E		D		M	A	L		T		C	
inch	mm	inch	mm	inch	mm	inch	inch	inch	mm	inch	mm	inch	mm
5/16	7.94	1/2	12.70	7/8	22.22	1 3/4	1 3/4	3/16	4.76	3/16	4.76	1 5/8	41.27
5/16	7.94	1/2	12.70	29/32	23.02	1 3/4	1 3/4	3/16	4.76	3/16	4.76	1 5/8	41.27
5/16	7.94	1/2	12.70	15/16	23.81	1 3/4	1 3/4	3/16	4.76	3/16	4.76	1 5/8	41.27
5/16	7.94	1/2	12.70	31/32	24.61	1 3/4	1 3/4	3/16	4.76	3/16	4.76	1 5/8	41.27
5/16	7.94	1/2	12.70	1	25.40	1 3/4	1 3/4	3/16	4.76	3/16	4.76	1 5/8	41.27
5/16	7.94	1/2	12.70	1 1/8	28.57	1 3/4	1 3/4	3/16	4.76	3/16	4.76	1 5/8	41.27
5/16	7.94	1/2	12.70	1 1/4	31.75	1 3/4	1 3/4	3/16	4.76	3/16	4.76	1 5/8	41.27
5/16	7.94	1/2	12.70	1 3/8	34.92	1 3/4	1 3/4	3/16	4.76	3/16	4.76	1 5/8	41.27
5/16	7.94	1/2	12.70	1 1/2	38.10	1 3/4	1 3/4	3/16	4.76	3/16	4.76	1 5/8	41.27
11/32	8.73	1/2	12.70	21/32	16.67	1 3/4	1 3/4	3/16	4.76	3/16	4.76	1 5/8	41.27
11/32	8.73	1/2	12.70	11/16	17.46	1 3/4	1 3/4	3/16	4.76	3/16	4.76	1 5/8	41.27
11/32	8.73	1/2	12.70	23/32	18.26	1 3/4	1 3/4	3/16	4.76	3/16	4.76	1 5/8	41.27
11/32	8.73	1/2	12.70	3/4	19.05	1 3/4	1 3/4	3/16	4.76	3/16	4.76	1 5/8	41.27
11/32	8.73	1/2	12.70	25/32	19.84	1 3/4	1 3/4	3/16	4.76	3/16	4.76	1 5/8	41.27
11/32	8.73	1/2	12.70	13/16	20.64	1 3/4	1 3/4	3/16	4.76	3/16	4.76	1 5/8	41.27
11/32	8.73	1/2	12.70	27/32	21.43	1 3/4	1 3/4	3/16	4.76	3/16	4.76	1 5/8	41.27
11/32	8.73	1/2	12.70	7/8	22.22	1 3/4	1 3/4	3/16	4.76	3/16	4.76	1 5/8	41.27
11/32	8.73	1/2	12.70	29/32	23.02	1 3/4	1 3/4	3/16	4.76	3/16	4.76	1 5/8	41.27
11/32	8.73	1/2	12.70	15/16	23.81	1 3/4	1 3/4	3/16	4.76	3/16	4.76	1 5/8	41.27
11/32	8.73	1/2	12.70	31/32	24.61	1 3/4	1 3/4	3/16	4.76	3/16	4.76	1 5/8	41.27
11/32	8.73	1/2	12.70	1	25.40	1 3/4	1 3/4	3/16	4.76	3/16	4.76	1 5/8	41.27
11/32	8.73	1/2	12.70	1 1/8	28.57	1 3/4	1 3/4	3/16	4.76	3/16	4.76	1 5/8	41.27
11/32	8.73	1/2	12.70	1 1/4	31.75	1 3/4	1 3/4	3/16	4.76	3/16	4.76	1 5/8	41.27
11/32	8.73	1/2	12.70	1 3/8	34.92	1 3/4	1 3/4	3/16	4.76	3/16	4.76	1 5/8	41.27
11/32	8.73	1/2	12.70	1 1/2	38.10	1 3/4	1 3/4	3/16	4.76	3/16	4.76	1 5/8	41.27
3/8	9.52	1/2	12.70	21/32	16.67	1 3/4	1 3/4	3/16	4.76	3/16	4.76	1 5/8	41.27
3/8	9.52	1/2	12.70	11/16	17.46	1 3/4	1 3/4	3/16	4.76	3/16	4.76	1 5/8	41.27
3/8	9.52	1/2	12.70	23/32	18.26	1 3/4	1 3/4	3/16	4.76	3/16	4.76	1 5/8	41.27
3/8	9.52	1/2	12.70	3/4	19.05	1 3/4	1 3/4	3/16	4.76	3/16	4.76	1 5/8	41.27
3/8	9.52	1/2	12.70	25/32	19.84	1 3/4	1 3/4	3/16	4.76	3/16	4.76	1 5/8	41.27
3/8	9.52	1/2	12.70	13/16	20.64	1 3/4	1 3/4	3/16	4.76	3/16	4.76	1 5/8	41.27
3/8	9.52	1/2	12.70	27/32	21.43	1 3/4	1 3/4	3/16	4.76	3/16	4.76	1 5/8	41.27
3/8	9.52	1/2	12.70	7/8	22.22	1 3/4	1 3/4	3/16	4.76	3/16	4.76	1 5/8	41.27
3/8	9.52	1/2	12.70	29/32	23.02	1 3/4	1 3/4	3/16	4.76	3/16	4.76	1 5/8	41.27
3/8	9.52	1/2	12.70	15/16	23.81	1 3/4	1 3/4	3/16	4.76	3/16	4.76	1 5/8	41.27
3/8	9.52	1/2	12.70	31/32	24.61	1 3/4	1 3/4	3/16	4.76	3/16	4.76	1 5/8	41.27
3/8	9.52	1/2	12.70	1	25.40	1 3/4	1 3/4	3/16	4.76	3/16	4.76	1 5/8	41.27
3/8	9.52	1/2	12.70	1 1/8	28.57	1 3/4	1 3/4	3/16	4.76	3/16	4.76	1 5/8	41.27
3/8	9.52	1/2	12.70	1 1/4	31.75	1 3/4	1 3/4	3/16	4.76	3/16	4.76	1 5/8	41.27
3/8	9.52	1/2	12.70	1 3/8	34.92	1 3/4	1 3/4	3/16	4.76	3/16	4.76	1 5/8	41.27
3/8	9.52	1/2	12.70	1 1/2	38.10	1 3/4	1 3/4	3/16	4.76	3/16	4.76	1 5/8	41.27
13/32	10.32	1/2	12.70	21/32	16.67	1 3/4	1 3/4	3/16	4.76	3/16	4.76	1 5/8	41.27
13/32	10.32	1/2	12.70	11/16	17.46	1 3/4	1 3/4	3/16	4.76	3/16	4.76	1 5/8	41.27
13/32	10.32	1/2	12.70	23/32	18.26	1 3/4	1 3/4	3/16	4.76	3/16	4.76	1 5/8	41.27
13/32	10.32	1/2	12.70	3/4	19.05	1 3/4	1 3/4	3/16	4.76	3/16	4.76	1 5/8	41.27

www.globaltungsten.com

B		E		D		M	A	L		T		C	
inch	mm	inch	mm	inch	mm	inch	inch	inch	mm	inch	mm	inch	mm
13/32	10.32	1/2	12.70	25/32	19.84	1 3/4	1 3/4	3/16	4.76	3/16	4.76	1 5/8	41.27
13/32	10.32	1/2	12.70	13/16	20.64	1 3/4	1 3/4	3/16	4.76	3/16	4.76	1 5/8	41.27
13/32	10.32	1/2	12.70	27/32	21.43	1 3/4	1 3/4	3/16	4.76	3/16	4.76	1 5/8	41.27
13/32	10.32	1/2	12.70	7/8	22.22	1 3/4	1 3/4	3/16	4.76	3/16	4.76	1 5/8	41.27
13/32	10.32	1/2	12.70	29/32	23.02	1 3/4	1 3/4	3/16	4.76	3/16	4.76	1 5/8	41.27
13/32	10.32	1/2	12.70	15/16	23.81	1 3/4	1 3/4	3/16	4.76	3/16	4.76	1 5/8	41.27
13/32	10.32	1/2	12.70	31/32	24.61	1 3/4	1 3/4	3/16	4.76	3/16	4.76	1 5/8	41.27
13/32	10.32	1/2	12.70	1	25.40	1 3/4	1 3/4	3/16	4.76	3/16	4.76	1 5/8	41.27
13/32	10.32	1/2	12.70	1 1/8	28.57	1 3/4	1 3/4	3/16	4.76	3/16	4.76	1 5/8	41.27
13/32	10.32	1/2	12.70	1 1/4	31.75	1 3/4	1 3/4	3/16	4.76	3/16	4.76	1 5/8	41.27
13/32	10.32	1/2	12.70	1 3/8	34.92	1 3/4	1 3/4	3/16	4.76	3/16	4.76	1 5/8	41.27
13/32	10.32	1/2	12.70	1 1/2	38.10	1 3/4	1 3/4	3/16	4.76	3/16	4.76	1 5/8	41.27
7/16	11.11	1/2	12.70	21/32	16.67	1 3/4	1 3/4	3/16	4.76	3/16	4.76	1 5/8	41.27
7/16	11.11	1/2	12.70	11/16	17.46	1 3/4	1 3/4	3/16	4.76	3/16	4.76	1 5/8	41.27
7/16	11.11	1/2	12.70	23/32	18.26	1 3/4	1 3/4	3/16	4.76	3/16	4.76	1 5/8	41.27
7/16	11.11	1/2	12.70	3/4	19.05	1 3/4	1 3/4	3/16	4.76	3/16	4.76	1 5/8	41.27
7/16	11.11	1/2	12.70	25/32	19.84	1 3/4	1 3/4	3/16	4.76	3/16	4.76	1 5/8	41.27
7/16	11.11	1/2	12.70	13/16	20.64	1 3/4	1 3/4	3/16	4.76	3/16	4.76	1 5/8	41.27
7/16	11.11	1/2	12.70	27/32	21.43	1 3/4	1 3/4	3/16	4.76	3/16	4.76	1 5/8	41.27
7/16	11.11	1/2	12.70	7/8	22.22	1 3/4	1 3/4	3/16	4.76	3/16	4.76	1 5/8	41.27
7/16	11.11	1/2	12.70	29/32	23.02	1 3/4	1 3/4	3/16	4.76	3/16	4.76	1 5/8	41.27
7/16	11.11	1/2	12.70	15/16	23.81	1 3/4	1 3/4	3/16	4.76	3/16	4.76	1 5/8	41.27
7/16	11.11	1/2	12.70	31/32	24.61	1 3/4	1 3/4	3/16	4.76	3/16	4.76	1 5/8	41.27
7/16	11.11	1/2	12.70	1	25.40	1 3/4	1 3/4	3/16	4.76	3/16	4.76	1 5/8	41.27
7/16	11.11	1/2	12.70	1 1/8	28.57	1 3/4	1 3/4	3/16	4.76	3/16	4.76	1 5/8	41.27
7/16	11.11	1/2	12.70	1 1/4	31.75	1 3/4	1 3/4	3/16	4.76	3/16	4.76	1 5/8	41.27
7/16	11.11	1/2	12.70	1 3/8	34.92	1 3/4	1 3/4	3/16	4.76	3/16	4.76	1 5/8	41.27
7/16	11.11	1/2	12.70	1 1/2	38.10	1 3/4	1 3/4	3/16	4.76	3/16	4.76	1 5/8	41.27
15/32	11.91	1/2	12.70	21/32	16.67	1 3/4	1 3/4	3/16	4.76	3/16	4.76	1 5/8	41.27
15/32	11.91	1/2	12.70	11/16	17.46	1 3/4	1 3/4	3/16	4.76	3/16	4.76	1 5/8	41.27
15/32	11.91	1/2	12.70	23/32	18.26	1 3/4	1 3/4	3/16	4.76	3/16	4.76	1 5/8	41.27
15/32	11.91	1/2	12.70	3/4	19.05	1 3/4	1 3/4	3/16	4.76	3/16	4.76	1 5/8	41.27
15/32	11.91	1/2	12.70	25/32	19.84	1 3/4	1 3/4	3/16	4.76	3/16	4.76	1 5/8	41.27
15/32	11.91	1/2	12.70	13/16	20.64	1 3/4	1 3/4	3/16	4.76	3/16	4.76	1 5/8	41.27
15/32	11.91	1/2	12.70	27/32	21.43	1 3/4	1 3/4	3/16	4.76	3/16	4.76	1 5/8	41.27
15/32	11.91	1/2	12.70	7/8	22.22	1 3/4	1 3/4	3/16	4.76	3/16	4.76	1 5/8	41.27
15/32	11.91	1/2	12.70	29/32	23.02	1 3/4	1 3/4	3/16	4.76	3/16	4.76	1 5/8	41.27
15/32	11.91	1/2	12.70	15/16	23.81	1 3/4	1 3/4	3/16	4.76	3/16	4.76	1 5/8	41.27
15/32	11.91	1/2	12.70	31/32	24.61	1 3/4	1 3/4	3/16	4.76	3/16	4.76	1 5/8	41.27
15/32	11.91	1/2	12.70	1	25.40	1 3/4	1 3/4	3/16	4.76	3/16	4.76	1 5/8	41.27
15/32	11.91	1/2	12.70	1 1/8	28.57	1 3/4	1 3/4	3/16	4.76	3/16	4.76	1 5/8	41.27
15/32	11.91	1/2	12.70	1 1/4	31.75	1 3/4	1 3/4	3/16	4.76	3/16	4.76	1 5/8	41.27
15/32	11.91	1/2	12.70	1 3/8	34.92	1 3/4	1 3/4	3/16	4.76	3/16	4.76	1 5/8	41.27
15/32	11.91	1/2	12.70	1 1/2	38.10	1 3/4	1 3/4	3/16	4.76	3/16	4.76	1 5/8	41.27
1/2	12.70	1/2	12.70	21/32	16.67	1 3/4	1 3/4	3/16	4.76	3/16	4.76	1 5/8	41.27

www.globaltungsten.com

B		E		D		M	A	L		T		C	
inch	mm	inch	mm	inch	mm	inch	inch	inch	mm	inch	mm	inch	mm
1/2	12.70	1/2	12.70	11/16	17.46	1 3/4	1 3/4	3/16	4.76	3/16	4.76	1 5/8	41.27
1/2	12.70	1/2	12.70	23/32	18.26	1 3/4	1 3/4	3/16	4.76	3/16	4.76	1 5/8	41.27
1/2	12.70	1/2	12.70	3/4	19.05	1 3/4	1 3/4	3/16	4.76	3/16	4.76	1 5/8	41.27
1/2	12.70	1/2	12.70	25/32	19.84	1 3/4	1 3/4	3/16	4.76	3/16	4.76	1 5/8	41.27
1/2	12.70	1/2	12.70	13/16	20.64	1 3/4	1 3/4	3/16	4.76	3/16	4.76	1 5/8	41.27
1/2	12.70	1/2	12.70	27/32	21.43	1 3/4	1 3/4	3/16	4.76	3/16	4.76	1 5/8	41.27
1/2	12.70	1/2	12.70	7/8	22.22	1 3/4	1 3/4	3/16	4.76	3/16	4.76	1 5/8	41.27
1/2	12.70	1/2	12.70	29/32	23.02	1 3/4	1 3/4	3/16	4.76	3/16	4.76	1 5/8	41.27
1/2	12.70	1/2	12.70	15/16	23.81	1 3/4	1 3/4	3/16	4.76	3/16	4.76	1 5/8	41.27
1/2	12.70	1/2	12.70	31/32	24.61	1 3/4	1 3/4	3/16	4.76	3/16	4.76	1 5/8	41.27
1/2	12.70	1/2	12.70	1	25.40	1 3/4	1 3/4	3/16	4.76	3/16	4.76	1 5/8	41.27
1/2	12.70	1/2	12.70	1 1/8	28.57	1 3/4	1 3/4	3/16	4.76	3/16	4.76	1 5/8	41.27
1/2	12.70	1/2	12.70	1 1/4	31.75	1 3/4	1 3/4	3/16	4.76	3/16	4.76	1 5/8	41.27
1/2	12.70	1/2	12.70	1 3/8	34.92	1 3/4	1 3/4	3/16	4.76	3/16	4.76	1 5/8	41.27
1/2	12.70	1/2	12.70	1 1/2	38.10	1 3/4	1 3/4	3/16	4.76	3/16	4.76	1 5/8	41.27
3/16	4.76	3/8	9.52	19/32	15.08	1 3/4	1 3/4	3/16	4.76	3/16	4.76	1 5/8	41.27
3/16	4.76	3/8	9.52	5/8	15.87	1 3/4	1 3/4	3/16	4.76	3/16	4.76	1 5/8	41.27
3/16	4.76	3/8	9.52	21/32	16.67	1 3/4	1 3/4	3/16	4.76	3/16	4.76	1 5/8	41.27
3/16	4.76	3/8	9.52	11/16	17.46	1 3/4	1 3/4	3/16	4.76	3/16	4.76	1 5/8	41.27
3/16	4.76	3/8	9.52	23/32	18.26	1 3/4	1 3/4	3/16	4.76	3/16	4.76	1 5/8	41.27
3/16	4.76	3/8	9.52	3/4	19.05	1 3/4	1 3/4	3/16	4.76	3/16	4.76	1 5/8	41.27
3/16	4.76	3/8	9.52	25/32	19.84	1 3/4	1 3/4	3/16	4.76	3/16	4.76	1 5/8	41.27
3/16	4.76	3/8	9.52	13/16	20.64	1 3/4	1 3/4	3/16	4.76	3/16	4.76	1 5/8	41.27
3/16	4.76	3/8	9.52	27/32	21.43	1 3/4	1 3/4	3/16	4.76	3/16	4.76	1 5/8	41.27
3/16	4.76	3/8	9.52	7/8	22.22	1 3/4	1 3/4	3/16	4.76	3/16	4.76	1 5/8	41.27
3/16	4.76	3/8	9.52	29/32	23.02	1 3/4	1 3/4	3/16	4.76	3/16	4.76	1 5/8	41.27
3/16	4.76	3/8	9.52	15/16	23.81	1 3/4	1 3/4	3/16	4.76	3/16	4.76	1 5/8	41.27
3/16	4.76	3/8	9.52	31/32	24.61	1 3/4	1 3/4	3/16	4.76	3/16	4.76	1 5/8	41.27
3/16	4.76	3/8	9.52	1	25.40	1 3/4	1 3/4	3/16	4.76	3/16	4.76	1 5/8	41.27
3/16	4.76	3/8	9.52	1 1/8	28.57	1 3/4	1 3/4	3/16	4.76	3/16	4.76	1 5/8	41.27
3/16	4.76	3/8	9.52	1 1/4	31.75	1 3/4	1 3/4	3/16	4.76	3/16	4.76	1 5/8	41.27
3/16	4.76	3/8	9.52	1 3/8	34.92	1 3/4	1 3/4	3/16	4.76	3/16	4.76	1 5/8	41.27
3/16	4.76	3/8	9.52	1 1/2	38.10	1 3/4	1 3/4	3/16	4.76	3/16	4.76	1 5/8	41.27
7/32	5.56	3/8	9.52	19/32	15.08	1 3/4	1 3/4	3/16	4.76	3/16	4.76	1 5/8	41.27
7/32	5.56	3/8	9.52	5/8	15.87	1 3/4	1 3/4	3/16	4.76	3/16	4.76	1 5/8	41.27
7/32	5.56	3/8	9.52	21/32	16.67	1 3/4	1 3/4	3/16	4.76	3/16	4.76	1 5/8	41.27
7/32	5.56	3/8	9.52	11/16	17.46	1 3/4	1 3/4	3/16	4.76	3/16	4.76	1 5/8	41.27
7/32	5.56	3/8	9.52	23/32	18.26	1 3/4	1 3/4	3/16	4.76	3/16	4.76	1 5/8	41.27
7/32	5.56	3/8	9.52	3/4	19.05	1 3/4	1 3/4	3/16	4.76	3/16	4.76	1 5/8	41.27
7/32	5.56	3/8	9.52	25/32	19.84	1 3/4	1 3/4	3/16	4.76	3/16	4.76	1 5/8	41.27
7/32	5.56	3/8	9.52	13/16	20.64	1 3/4	1 3/4	3/16	4.76	3/16	4.76	1 5/8	41.27
7/32	5.56	3/8	9.52	27/32	21.43	1 3/4	1 3/4	3/16	4.76	3/16	4.76	1 5/8	41.27
7/32	5.56	3/8	9.52	7/8	22.22	1 3/4	1 3/4	3/16	4.76	3/16	4.76	1 5/8	41.27
7/32	5.56	3/8	9.52	29/32	23.02	1 3/4	1 3/4	3/16	4.76	3/16	4.76	1 5/8	41.27
7/32	5.56	3/8	9.52	15/16	23.81	1 3/4	1 3/4	3/16	4.76	3/16	4.76	1 5/8	41.27

www.globaltungsten.com

B		E		D		M	A	L		T		C	
inch	mm	inch	mm	inch	mm	inch	inch	inch	mm	inch	mm	inch	mm
7/32	5.56	3/8	9.52	31/32	24.61	1 3/4	1 3/4	3/16	4.76	3/16	4.76	1 5/8	41.27
7/32	5.56	3/8	9.52	1	25.40	1 3/4	1 3/4	3/16	4.76	3/16	4.76	1 5/8	41.27
7/32	5.56	3/8	9.52	1 1/8	28.57	1 3/4	1 3/4	3/16	4.76	3/16	4.76	1 5/8	41.27
7/32	5.56	3/8	9.52	1 1/4	31.75	1 3/4	1 3/4	3/16	4.76	3/16	4.76	1 5/8	41.27
7/32	5.56	3/8	9.52	1 3/8	34.92	1 3/4	1 3/4	3/16	4.76	3/16	4.76	1 5/8	41.27
7/32	5.56	3/8	9.52	1 1/2	38.10	1 3/4	1 3/4	3/16	4.76	3/16	4.76	1 5/8	41.27
1/4	6.35	3/8	9.52	19/32	15.08	1 3/4	1 3/4	3/16	4.76	3/16	4.76	1 5/8	41.27
1/4	6.35	3/8	9.52	5/8	15.87	1 3/4	1 3/4	3/16	4.76	3/16	4.76	1 5/8	41.27
1/4	6.35	3/8	9.52	21/32	16.67	1 3/4	1 3/4	3/16	4.76	3/16	4.76	1 5/8	41.27
1/4	6.35	3/8	9.52	11/16	17.46	1 3/4	1 3/4	3/16	4.76	3/16	4.76	1 5/8	41.27
1/4	6.35	3/8	9.52	23/32	18.26	1 3/4	1 3/4	3/16	4.76	3/16	4.76	1 5/8	41.27
1/4	6.35	3/8	9.52	3/4	19.05	1 3/4	1 3/4	3/16	4.76	3/16	4.76	1 5/8	41.27
1/4	6.35	3/8	9.52	25/32	19.84	1 3/4	1 3/4	3/16	4.76	3/16	4.76	1 5/8	41.27
1/4	6.35	3/8	9.52	13/16	20.64	1 3/4	1 3/4	3/16	4.76	3/16	4.76	1 5/8	41.27
1/4	6.35	3/8	9.52	27/32	21.43	1 3/4	1 3/4	3/16	4.76	3/16	4.76	1 5/8	41.27
1/4	6.35	3/8	9.52	7/8	22.22	1 3/4	1 3/4	3/16	4.76	3/16	4.76	1 5/8	41.27
1/4	6.35	3/8	9.52	29/32	23.02	1 3/4	1 3/4	3/16	4.76	3/16	4.76	1 5/8	41.27
1/4	6.35	3/8	9.52	15/16	23.81	1 3/4	1 3/4	3/16	4.76	3/16	4.76	1 5/8	41.27
1/4	6.35	3/8	9.52	31/32	24.61	1 3/4	1 3/4	3/16	4.76	3/16	4.76	1 5/8	41.27
1/4	6.35	3/8	9.52	1	25.40	1 3/4	1 3/4	3/16	4.76	3/16	4.76	1 5/8	41.27
1/4	6.35	3/8	9.52	1 1/8	28.57	1 3/4	1 3/4	3/16	4.76	3/16	4.76	1 5/8	41.27
1/4	6.35	3/8	9.52	1 1/4	31.75	1 3/4	1 3/4	3/16	4.76	3/16	4.76	1 5/8	41.27
1/4	6.35	3/8	9.52	1 3/8	34.92	1 3/4	1 3/4	3/16	4.76	3/16	4.76	1 5/8	41.27
1/4	6.35	3/8	9.52	1 1/2	38.10	1 3/4	1 3/4	3/16	4.76	3/16	4.76	1 5/8	41.27
9/32	7.14	3/8	9.52	19/32	15.08	1 3/4	1 3/4	3/16	4.76	3/16	4.76	1 5/8	41.27
9/32	7.14	3/8	9.52	5/8	15.87	1 3/4	1 3/4	3/16	4.76	3/16	4.76	1 5/8	41.27
9/32	7.14	3/8	9.52	21/32	16.67	1 3/4	1 3/4	3/16	4.76	3/16	4.76	1 5/8	41.27
9/32	7.14	3/8	9.52	11/16	17.46	1 3/4	1 3/4	3/16	4.76	3/16	4.76	1 5/8	41.27
9/32	7.14	3/8	9.52	23/32	18.26	1 3/4	1 3/4	3/16	4.76	3/16	4.76	1 5/8	41.27
9/32	7.14	3/8	9.52	3/4	19.05	1 3/4	1 3/4	3/16	4.76	3/16	4.76	1 5/8	41.27
9/32	7.14	3/8	9.52	25/32	19.84	1 3/4	1 3/4	3/16	4.76	3/16	4.76	1 5/8	41.27
9/32	7.14	3/8	9.52	13/16	20.64	1 3/4	1 3/4	3/16	4.76	3/16	4.76	1 5/8	41.27
9/32	7.14	3/8	9.52	27/32	21.43	1 3/4	1 3/4	3/16	4.76	3/16	4.76	1 5/8	41.27
9/32	7.14	3/8	9.52	7/8	22.22	1 3/4	1 3/4	3/16	4.76	3/16	4.76	1 5/8	41.27
9/32	7.14	3/8	9.52	29/32	23.02	1 3/4	1 3/4	3/16	4.76	3/16	4.76	1 5/8	41.27
9/32	7.14	3/8	9.52	15/16	23.81	1 3/4	1 3/4	3/16	4.76	3/16	4.76	1 5/8	41.27
9/32	7.14	3/8	9.52	31/32	24.61	1 3/4	1 3/4	3/16	4.76	3/16	4.76	1 5/8	41.27
9/32	7.14	3/8	9.52	1	25.40	1 3/4	1 3/4	3/16	4.76	3/16	4.76	1 5/8	41.27
9/32	7.14	3/8	9.52	1 1/8	28.57	1 3/4	1 3/4	3/16	4.76	3/16	4.76	1 5/8	41.27
9/32	7.14	3/8	9.52	1 1/4	31.75	1 3/4	1 3/4	3/16	4.76	3/16	4.76	1 5/8	41.27
9/32	7.14	3/8	9.52	1 3/8	34.92	1 3/4	1 3/4	3/16	4.76	3/16	4.76	1 5/8	41.27
9/32	7.14	3/8	9.52	1 1/2	38.10	1 3/4	1 3/4	3/16	4.76	3/16	4.76	1 5/8	41.27
5/16	7.94	3/8	9.52	19/32	15.08	1 3/4	1 3/4	3/16	4.76	3/16	4.76	1 5/8	41.27
5/16	7.94	3/8	9.52	5/8	15.87	1 3/4	1 3/4	3/16	4.76	3/16	4.76	1 5/8	41.27
5/16	7.94	3/8	9.52	21/32	16.67	1 3/4	1 3/4	3/16	4.76	3/16	4.76	1 5/8	41.27

www.globaltungsteins.com

B		E		D		M	A	L		T		C	
inch	mm	inch	mm	inch	mm	inch	inch	inch	mm	inch	mm	inch	mm
5/16	7.94	3/8	9.52	11/16	17.46	1 3/4	1 3/4	3/16	4.76	3/16	4.76	1 5/8	41.27
5/16	7.94	3/8	9.52	23/32	18.26	1 3/4	1 3/4	3/16	4.76	3/16	4.76	1 5/8	41.27
5/16	7.94	3/8	9.52	3/4	19.05	1 3/4	1 3/4	3/16	4.76	3/16	4.76	1 5/8	41.27
5/16	7.94	3/8	9.52	25/32	19.84	1 3/4	1 3/4	3/16	4.76	3/16	4.76	1 5/8	41.27
5/16	7.94	3/8	9.52	13/16	20.64	1 3/4	1 3/4	3/16	4.76	3/16	4.76	1 5/8	41.27
5/16	7.94	3/8	9.52	27/32	21.43	1 3/4	1 3/4	3/16	4.76	3/16	4.76	1 5/8	41.27
5/16	7.94	3/8	9.52	7/8	22.22	1 3/4	1 3/4	3/16	4.76	3/16	4.76	1 5/8	41.27
5/16	7.94	3/8	9.52	29/32	23.02	1 3/4	1 3/4	3/16	4.76	3/16	4.76	1 5/8	41.27
5/16	7.94	3/8	9.52	15/16	23.81	1 3/4	1 3/4	3/16	4.76	3/16	4.76	1 5/8	41.27
5/16	7.94	3/8	9.52	31/32	24.61	1 3/4	1 3/4	3/16	4.76	3/16	4.76	1 5/8	41.27
5/16	7.94	3/8	9.52	1	25.40	1 3/4	1 3/4	3/16	4.76	3/16	4.76	1 5/8	41.27
5/16	7.94	3/8	9.52	1 1/8	28.57	1 3/4	1 3/4	3/16	4.76	3/16	4.76	1 5/8	41.27
5/16	7.94	3/8	9.52	1 1/4	31.75	1 3/4	1 3/4	3/16	4.76	3/16	4.76	1 5/8	41.27
5/16	7.94	3/8	9.52	1 3/8	34.92	1 3/4	1 3/4	3/16	4.76	3/16	4.76	1 5/8	41.27
5/16	7.94	3/8	9.52	1 1/2	38.10	1 3/4	1 3/4	3/16	4.76	3/16	4.76	1 5/8	41.27
11/32	8.73	3/8	9.52	19/32	15.08	1 3/4	1 3/4	3/16	4.76	3/16	4.76	1 5/8	41.27
11/32	8.73	3/8	9.52	5/8	15.87	1 3/4	1 3/4	3/16	4.76	3/16	4.76	1 5/8	41.27
11/32	8.73	3/8	9.52	21/32	16.67	1 3/4	1 3/4	3/16	4.76	3/16	4.76	1 5/8	41.27
11/32	8.73	3/8	9.52	11/16	17.46	1 3/4	1 3/4	3/16	4.76	3/16	4.76	1 5/8	41.27
11/32	8.73	3/8	9.52	23/32	18.26	1 3/4	1 3/4	3/16	4.76	3/16	4.76	1 5/8	41.27
11/32	8.73	3/8	9.52	3/4	19.05	1 3/4	1 3/4	3/16	4.76	3/16	4.76	1 5/8	41.27
11/32	8.73	3/8	9.52	25/32	19.84	1 3/4	1 3/4	3/16	4.76	3/16	4.76	1 5/8	41.27
11/32	8.73	3/8	9.52	13/16	20.64	1 3/4	1 3/4	3/16	4.76	3/16	4.76	1 5/8	41.27
11/32	8.73	3/8	9.52	27/32	21.43	1 3/4	1 3/4	3/16	4.76	3/16	4.76	1 5/8	41.27
11/32	8.73	3/8	9.52	7/8	22.22	1 3/4	1 3/4	3/16	4.76	3/16	4.76	1 5/8	41.27
11/32	8.73	3/8	9.52	29/32	23.02	1 3/4	1 3/4	3/16	4.76	3/16	4.76	1 5/8	41.27
11/32	8.73	3/8	9.52	15/16	23.81	1 3/4	1 3/4	3/16	4.76	3/16	4.76	1 5/8	41.27
11/32	8.73	3/8	9.52	31/32	24.61	1 3/4	1 3/4	3/16	4.76	3/16	4.76	1 5/8	41.27
11/32	8.73	3/8	9.52	1	25.40	1 3/4	1 3/4	3/16	4.76	3/16	4.76	1 5/8	41.27
11/32	8.73	3/8	9.52	1 1/8	28.57	1 3/4	1 3/4	3/16	4.76	3/16	4.76	1 5/8	41.27
11/32	8.73	3/8	9.52	1 1/4	31.75	1 3/4	1 3/4	3/16	4.76	3/16	4.76	1 5/8	41.27
11/32	8.73	3/8	9.52	1 3/8	34.92	1 3/4	1 3/4	3/16	4.76	3/16	4.76	1 5/8	41.27
11/32	8.73	3/8	9.52	1 1/2	38.10	1 3/4	1 3/4	3/16	4.76	3/16	4.76	1 5/8	41.27
3/8	9.52	3/8	9.52	19/32	15.08	1 3/4	1 3/4	3/16	4.76	3/16	4.76	1 5/8	41.27
3/8	9.52	3/8	9.52	5/8	15.87	1 3/4	1 3/4	3/16	4.76	3/16	4.76	1 5/8	41.27
3/8	9.52	3/8	9.52	21/32	16.67	1 3/4	1 3/4	3/16	4.76	3/16	4.76	1 5/8	41.27
3/8	9.52	3/8	9.52	11/16	17.46	1 3/4	1 3/4	3/16	4.76	3/16	4.76	1 5/8	41.27
3/8	9.52	3/8	9.52	23/32	18.26	1 3/4	1 3/4	3/16	4.76	3/16	4.76	1 5/8	41.27
3/8	9.52	3/8	9.52	3/4	19.05	1 3/4	1 3/4	3/16	4.76	3/16	4.76	1 5/8	41.27
3/8	9.52	3/8	9.52	25/32	19.84	1 3/4	1 3/4	3/16	4.76	3/16	4.76	1 5/8	41.27
3/8	9.52	3/8	9.52	13/16	20.64	1 3/4	1 3/4	3/16	4.76	3/16	4.76	1 5/8	41.27
3/8	9.52	3/8	9.52	27/32	21.43	1 3/4	1 3/4	3/16	4.76	3/16	4.76	1 5/8	41.27
3/8	9.52	3/8	9.52	7/8	22.22	1 3/4	1 3/4	3/16	4.76	3/16	4.76	1 5/8	41.27
3/8	9.52	3/8	9.52	29/32	23.02	1 3/4	1 3/4	3/16	4.76	3/16	4.76	1 5/8	41.27
3/8	9.52	3/8	9.52	15/16	23.81	1 3/4	1 3/4	3/16	4.76	3/16	4.76	1 5/8	41.27

www.globaltungsteks.com

B		E		D		M	A	L		T		C	
inch	mm	inch	mm	inch	mm	inch	inch	inch	mm	inch	mm	inch	mm
3/8	9.52	3/8	9.52	31/32	24.61	1 3/4	1 3/4	3/16	4.76	3/16	4.76	1 5/8	41.27
3/8	9.52	3/8	9.52	1	25.40	1 3/4	1 3/4	3/16	4.76	3/16	4.76	1 5/8	41.27
3/8	9.52	3/8	9.52	1 1/8	28.57	1 3/4	1 3/4	3/16	4.76	3/16	4.76	1 5/8	41.27
3/8	9.52	3/8	9.52	1 1/4	31.75	1 3/4	1 3/4	3/16	4.76	3/16	4.76	1 5/8	41.27
3/8	9.52	3/8	9.52	1 3/8	34.92	1 3/4	1 3/4	3/16	4.76	3/16	4.76	1 5/8	41.27
3/8	9.52	3/8	9.52	1 1/2	38.10	1 3/4	1 3/4	3/16	4.76	3/16	4.76	1 5/8	41.27
3/16	4.76	1 1/8	28.57	1 3/8	34.92	1 5/8	1 5/8	3/16	4.76	3/16	4.76	1 5/8	41.27
7/32	5.56	1 1/8	28.57	1 3/8	34.92	1 5/8	1 5/8	3/16	4.76	3/16	4.76	1 5/8	41.27
1/4	6.35	1 1/8	28.57	1 3/8	34.92	1 5/8	1 5/8	3/16	4.76	3/16	4.76	1 5/8	41.27
9/32	7.14	1 1/8	28.57	1 3/8	34.92	1 5/8	1 5/8	3/16	4.76	3/16	4.76	1 5/8	41.27
5/16	7.94	1 1/8	28.57	1 3/8	34.92	1 5/8	1 5/8	3/16	4.76	3/16	4.76	1 5/8	41.27
11/32	8.73	1 1/8	28.57	1 3/8	34.92	1 5/8	1 5/8	3/16	4.76	3/16	4.76	1 5/8	41.27
3/8	9.52	1 1/8	28.57	1 3/8	34.92	1 5/8	1 5/8	3/16	4.76	3/16	4.76	1 5/8	41.27
13/32	10.32	1 1/8	28.57	1 3/8	34.92	1 5/8	1 5/8	3/16	4.76	3/16	4.76	1 5/8	41.27
7/16	11.11	1 1/8	28.57	1 3/8	34.92	1 5/8	1 5/8	3/16	4.76	3/16	4.76	1 5/8	41.27
15/32	11.91	1 1/8	28.57	1 3/8	34.92	1 5/8	1 5/8	3/16	4.76	3/16	4.76	1 5/8	41.27
1/2	12.70	1 1/8	28.57	1 3/8	34.92	1 5/8	1 5/8	3/16	4.76	3/16	4.76	1 5/8	41.27
17/32	13.49	1 1/8	28.57	1 3/8	34.92	1 5/8	1 5/8	3/16	4.76	3/16	4.76	1 5/8	41.27
9/16	14.29	1 1/8	28.57	1 3/8	34.92	1 5/8	1 5/8	3/16	4.76	3/16	4.76	1 5/8	41.27
19/32	15.08	1 1/8	28.57	1 3/8	34.92	1 5/8	1 5/8	3/16	4.76	3/16	4.76	1 5/8	41.27
5/8	15.87	1 1/8	28.57	1 3/8	34.92	1 5/8	1 5/8	3/16	4.76	3/16	4.76	1 5/8	41.27
21/32	16.67	1 1/8	28.57	1 3/8	34.92	1 5/8	1 5/8	3/16	4.76	3/16	4.76	1 5/8	41.27
11/16	17.46	1 1/8	28.57	1 3/8	34.92	1 5/8	1 5/8	3/16	4.76	3/16	4.76	1 5/8	41.27
23/32	18.26	1 1/8	28.57	1 3/8	34.92	1 5/8	1 5/8	3/16	4.76	3/16	4.76	1 5/8	41.27
3/4	19.05	1 1/8	28.57	1 3/8	34.92	1 5/8	1 5/8	3/16	4.76	3/16	4.76	1 5/8	41.27
25/32	19.84	1 1/8	28.57	1 3/8	34.92	1 5/8	1 5/8	3/16	4.76	3/16	4.76	1 5/8	41.27
13/16	20.64	1 1/8	28.57	1 3/8	34.92	1 5/8	1 5/8	3/16	4.76	3/16	4.76	1 5/8	41.27
27/32	21.43	1 1/8	28.57	1 3/8	34.92	1 5/8	1 5/8	3/16	4.76	3/16	4.76	1 5/8	41.27
7/8	22.22	1 1/8	28.57	1 3/8	34.92	1 5/8	1 5/8	3/16	4.76	3/16	4.76	1 5/8	41.27
29/32	23.02	1 1/8	28.57	1 3/8	34.92	1 5/8	1 5/8	3/16	4.76	3/16	4.76	1 5/8	41.27
15/16	23.81	1 1/8	28.57	1 3/8	34.92	1 5/8	1 5/8	3/16	4.76	3/16	4.76	1 5/8	41.27
31/32	24.61	1 1/8	28.57	1 3/8	34.92	1 5/8	1 5/8	3/16	4.76	3/16	4.76	1 5/8	41.27
1	25.40	1 1/8	28.57	1 3/8	34.92	1 5/8	1 5/8	3/16	4.76	3/16	4.76	1 5/8	41.27
3/16	4.76	1	25.40	1 1/4	31.75	1 5/8	1 5/8	3/16	4.76	3/16	4.76	1 5/8	41.27
7/32	5.56	1	25.40	1 1/4	31.75	1 5/8	1 5/8	3/16	4.76	3/16	4.76	1 5/8	41.27
1/4	6.35	1	25.40	1 1/4	31.75	1 5/8	1 5/8	3/16	4.76	3/16	4.76	1 5/8	41.27
9/32	7.14	1	25.40	1 1/4	31.75	1 5/8	1 5/8	3/16	4.76	3/16	4.76	1 5/8	41.27
5/16	7.94	1	25.40	1 1/4	31.75	1 5/8	1 5/8	3/16	4.76	3/16	4.76	1 5/8	41.27
11/32	8.73	1	25.40	1 1/4	31.75	1 5/8	1 5/8	3/16	4.76	3/16	4.76	1 5/8	41.27
3/8	9.52	1	25.40	1 1/4	31.75	1 5/8	1 5/8	3/16	4.76	3/16	4.76	1 5/8	41.27
13/32	10.32	1	25.40	1 1/4	31.75	1 5/8	1 5/8	3/16	4.76	3/16	4.76	1 5/8	41.27
7/16	11.11	1	25.40	1 1/4	31.75	1 5/8	1 5/8	3/16	4.76	3/16	4.76	1 5/8	41.27
15/32	11.91	1	25.40	1 1/4	31.75	1 5/8	1 5/8	3/16	4.76	3/16	4.76	1 5/8	41.27
1/2	12.70	1	25.40	1 1/4	31.75	1 5/8	1 5/8	3/16	4.76	3/16	4.76	1 5/8	41.27
17/32	13.49	1	25.40	1 1/4	31.75	1 5/8	1 5/8	3/16	4.76	3/16	4.76	1 5/8	41.27

www.globaltungsteels.com

B		E		D		M	A	L		T		C	
inch	mm	inch	mm	inch	mm	inch	inch	inch	mm	inch	mm	inch	mm
9/16	14.29	1	25.40	1 1/4	31.75	1 5/8	1 5/8	3/16	4.76	3/16	4.76	1 5/8	41.27
19/32	15.08	1	25.40	1 1/4	31.75	1 5/8	1 5/8	3/16	4.76	3/16	4.76	1 5/8	41.27
5/8	15.87	1	25.40	1 1/4	31.75	1 5/8	1 5/8	3/16	4.76	3/16	4.76	1 5/8	41.27
21/32	16.67	1	25.40	1 1/4	31.75	1 5/8	1 5/8	3/16	4.76	3/16	4.76	1 5/8	41.27
11/16	17.46	1	25.40	1 1/4	31.75	1 5/8	1 5/8	3/16	4.76	3/16	4.76	1 5/8	41.27
23/32	18.26	1	25.40	1 1/4	31.75	1 5/8	1 5/8	3/16	4.76	3/16	4.76	1 5/8	41.27
3/4	19.05	1	25.40	1 1/4	31.75	1 5/8	1 5/8	3/16	4.76	3/16	4.76	1 5/8	41.27
25/32	19.84	1	25.40	1 1/4	31.75	1 5/8	1 5/8	3/16	4.76	3/16	4.76	1 5/8	41.27
13/16	20.64	1	25.40	1 1/4	31.75	1 5/8	1 5/8	3/16	4.76	3/16	4.76	1 5/8	41.27
27/32	21.43	1	25.40	1 1/4	31.75	1 5/8	1 5/8	3/16	4.76	3/16	4.76	1 5/8	41.27
7/8	22.22	1	25.40	1 1/4	31.75	1 5/8	1 5/8	3/16	4.76	3/16	4.76	1 5/8	41.27
29/32	23.02	1	25.40	1 1/4	31.75	1 5/8	1 5/8	3/16	4.76	3/16	4.76	1 5/8	41.27
15/16	23.81	1	25.40	1 1/4	31.75	1 5/8	1 5/8	3/16	4.76	3/16	4.76	1 5/8	41.27
31/32	24.61	1	25.40	1 1/4	31.75	1 5/8	1 5/8	3/16	4.76	3/16	4.76	1 5/8	41.27
1	25.40	1	25.40	1 1/4	31.75	1 5/8	1 5/8	3/16	4.76	3/16	4.76	1 5/8	41.27
3/16	4.76	1	25.40	1 3/8	34.92	1 5/8	1 5/8	3/16	4.76	3/16	4.76	1 5/8	41.27
7/32	5.56	1	25.40	1 3/8	34.92	1 5/8	1 5/8	3/16	4.76	3/16	4.76	1 5/8	41.27
1/4	6.35	1	25.40	1 3/8	34.92	1 5/8	1 5/8	3/16	4.76	3/16	4.76	1 5/8	41.27
9/32	7.14	1	25.40	1 3/8	34.92	1 5/8	1 5/8	3/16	4.76	3/16	4.76	1 5/8	41.27
5/16	7.94	1	25.40	1 3/8	34.92	1 5/8	1 5/8	3/16	4.76	3/16	4.76	1 5/8	41.27
11/32	8.73	1	25.40	1 3/8	34.92	1 5/8	1 5/8	3/16	4.76	3/16	4.76	1 5/8	41.27
3/8	9.52	1	25.40	1 3/8	34.92	1 5/8	1 5/8	3/16	4.76	3/16	4.76	1 5/8	41.27
13/32	10.32	1	25.40	1 3/8	34.92	1 5/8	1 5/8	3/16	4.76	3/16	4.76	1 5/8	41.27
7/16	11.11	1	25.40	1 3/8	34.92	1 5/8	1 5/8	3/16	4.76	3/16	4.76	1 5/8	41.27
15/32	11.91	1	25.40	1 3/8	34.92	1 5/8	1 5/8	3/16	4.76	3/16	4.76	1 5/8	41.27
1/2	12.70	1	25.40	1 3/8	34.92	1 5/8	1 5/8	3/16	4.76	3/16	4.76	1 5/8	41.27
17/32	13.49	1	25.40	1 3/8	34.92	1 5/8	1 5/8	3/16	4.76	3/16	4.76	1 5/8	41.27
9/16	14.29	1	25.40	1 3/8	34.92	1 5/8	1 5/8	3/16	4.76	3/16	4.76	1 5/8	41.27
19/32	15.08	1	25.40	1 3/8	34.92	1 5/8	1 5/8	3/16	4.76	3/16	4.76	1 5/8	41.27
5/8	15.87	1	25.40	1 3/8	34.92	1 5/8	1 5/8	3/16	4.76	3/16	4.76	1 5/8	41.27
21/32	16.67	1	25.40	1 3/8	34.92	1 5/8	1 5/8	3/16	4.76	3/16	4.76	1 5/8	41.27
11/16	17.46	1	25.40	1 3/8	34.92	1 5/8	1 5/8	3/16	4.76	3/16	4.76	1 5/8	41.27
23/32	18.26	1	25.40	1 3/8	34.92	1 5/8	1 5/8	3/16	4.76	3/16	4.76	1 5/8	41.27
3/4	19.05	1	25.40	1 3/8	34.92	1 5/8	1 5/8	3/16	4.76	3/16	4.76	1 5/8	41.27
25/32	19.84	1	25.40	1 3/8	34.92	1 5/8	1 5/8	3/16	4.76	3/16	4.76	1 5/8	41.27
13/16	20.64	1	25.40	1 3/8	34.92	1 5/8	1 5/8	3/16	4.76	3/16	4.76	1 5/8	41.27
27/32	21.43	1	25.40	1 3/8	34.92	1 5/8	1 5/8	3/16	4.76	3/16	4.76	1 5/8	41.27
7/8	22.22	1	25.40	1 3/8	34.92	1 5/8	1 5/8	3/16	4.76	3/16	4.76	1 5/8	41.27
29/32	23.02	1	25.40	1 3/8	34.92	1 5/8	1 5/8	3/16	4.76	3/16	4.76	1 5/8	41.27
15/16	23.81	1	25.40	1 3/8	34.92	1 5/8	1 5/8	3/16	4.76	3/16	4.76	1 5/8	41.27
31/32	24.61	1	25.40	1 3/8	34.92	1 5/8	1 5/8	3/16	4.76	3/16	4.76	1 5/8	41.27
1	25.40	1	25.40	1 3/8	34.92	1 5/8	1 5/8	3/16	4.76	3/16	4.76	1 5/8	41.27
3/16	4.76	7/8	22.22	1 1/8	28.57	1 5/8	1 5/8	3/16	4.76	3/16	4.76	1 5/8	41.27
7/32	5.56	7/8	22.22	1 1/8	28.57	1 5/8	1 5/8	3/16	4.76	3/16	4.76	1 5/8	41.27
1/4	6.35	7/8	22.22	1 1/8	28.57	1 5/8	1 5/8	3/16	4.76	3/16	4.76	1 5/8	41.27

www.globaltungsten.com

B		E		D		M	A	L		T		C	
inch	mm	inch	mm	inch	mm	inch	inch	inch	mm	inch	mm	inch	mm
9/32	7.14	7/8	22.22	1 1/8	28.57	1 5/8	1 5/8	3/16	4.76	3/16	4.76	1 5/8	41.27
5/16	7.94	7/8	22.22	1 1/8	28.57	1 5/8	1 5/8	3/16	4.76	3/16	4.76	1 5/8	41.27
11/32	8.73	7/8	22.22	1 1/8	28.57	1 5/8	1 5/8	3/16	4.76	3/16	4.76	1 5/8	41.27
3/8	9.52	7/8	22.22	1 1/8	28.57	1 5/8	1 5/8	3/16	4.76	3/16	4.76	1 5/8	41.27
13/32	10.32	7/8	22.22	1 1/8	28.57	1 5/8	1 5/8	3/16	4.76	3/16	4.76	1 5/8	41.27
7/16	11.11	7/8	22.22	1 1/8	28.57	1 5/8	1 5/8	3/16	4.76	3/16	4.76	1 5/8	41.27
15/32	11.91	7/8	22.22	1 1/8	28.57	1 5/8	1 5/8	3/16	4.76	3/16	4.76	1 5/8	41.27
1/2	12.70	7/8	22.22	1 1/8	28.57	1 5/8	1 5/8	3/16	4.76	3/16	4.76	1 5/8	41.27
17/32	13.49	7/8	22.22	1 1/8	28.57	1 5/8	1 5/8	3/16	4.76	3/16	4.76	1 5/8	41.27
9/16	14.29	7/8	22.22	1 1/8	28.57	1 5/8	1 5/8	3/16	4.76	3/16	4.76	1 5/8	41.27
19/32	15.08	7/8	22.22	1 1/8	28.57	1 5/8	1 5/8	3/16	4.76	3/16	4.76	1 5/8	41.27
5/8	15.87	7/8	22.22	1 1/8	28.57	1 5/8	1 5/8	3/16	4.76	3/16	4.76	1 5/8	41.27
21/32	16.67	7/8	22.22	1 1/8	28.57	1 5/8	1 5/8	3/16	4.76	3/16	4.76	1 5/8	41.27
11/16	17.46	7/8	22.22	1 1/8	28.57	1 5/8	1 5/8	3/16	4.76	3/16	4.76	1 5/8	41.27
23/32	18.26	7/8	22.22	1 1/8	28.57	1 5/8	1 5/8	3/16	4.76	3/16	4.76	1 5/8	41.27
3/4	19.05	7/8	22.22	1 1/8	28.57	1 5/8	1 5/8	3/16	4.76	3/16	4.76	1 5/8	41.27
25/32	19.84	7/8	22.22	1 1/8	28.57	1 5/8	1 5/8	3/16	4.76	3/16	4.76	1 5/8	41.27
13/16	20.64	7/8	22.22	1 1/8	28.57	1 5/8	1 5/8	3/16	4.76	3/16	4.76	1 5/8	41.27
27/32	21.43	7/8	22.22	1 1/8	28.57	1 5/8	1 5/8	3/16	4.76	3/16	4.76	1 5/8	41.27
7/8	22.22	7/8	22.22	1 1/8	28.57	1 5/8	1 5/8	3/16	4.76	3/16	4.76	1 5/8	41.27
3/16	4.76	7/8	22.22	1 1/4	31.75	1 5/8	1 5/8	3/16	4.76	3/16	4.76	1 5/8	41.27
7/32	5.56	7/8	22.22	1 1/4	31.75	1 5/8	1 5/8	3/16	4.76	3/16	4.76	1 5/8	41.27
1/4	6.35	7/8	22.22	1 1/4	31.75	1 5/8	1 5/8	3/16	4.76	3/16	4.76	1 5/8	41.27
9/32	7.14	7/8	22.22	1 1/4	31.75	1 5/8	1 5/8	3/16	4.76	3/16	4.76	1 5/8	41.27
5/16	7.94	7/8	22.22	1 1/4	31.75	1 5/8	1 5/8	3/16	4.76	3/16	4.76	1 5/8	41.27
11/32	8.73	7/8	22.22	1 1/4	31.75	1 5/8	1 5/8	3/16	4.76	3/16	4.76	1 5/8	41.27
3/8	9.52	7/8	22.22	1 1/4	31.75	1 5/8	1 5/8	3/16	4.76	3/16	4.76	1 5/8	41.27
13/32	10.32	7/8	22.22	1 1/4	31.75	1 5/8	1 5/8	3/16	4.76	3/16	4.76	1 5/8	41.27
7/16	11.11	7/8	22.22	1 1/4	31.75	1 5/8	1 5/8	3/16	4.76	3/16	4.76	1 5/8	41.27
15/32	11.91	7/8	22.22	1 1/4	31.75	1 5/8	1 5/8	3/16	4.76	3/16	4.76	1 5/8	41.27
1/2	12.70	7/8	22.22	1 1/4	31.75	1 5/8	1 5/8	3/16	4.76	3/16	4.76	1 5/8	41.27
17/32	13.49	7/8	22.22	1 1/4	31.75	1 5/8	1 5/8	3/16	4.76	3/16	4.76	1 5/8	41.27
9/16	14.29	7/8	22.22	1 1/4	31.75	1 5/8	1 5/8	3/16	4.76	3/16	4.76	1 5/8	41.27
19/32	15.08	7/8	22.22	1 1/4	31.75	1 5/8	1 5/8	3/16	4.76	3/16	4.76	1 5/8	41.27
5/8	15.87	7/8	22.22	1 1/4	31.75	1 5/8	1 5/8	3/16	4.76	3/16	4.76	1 5/8	41.27
21/32	16.67	7/8	22.22	1 1/4	31.75	1 5/8	1 5/8	3/16	4.76	3/16	4.76	1 5/8	41.27
11/16	17.46	7/8	22.22	1 1/4	31.75	1 5/8	1 5/8	3/16	4.76	3/16	4.76	1 5/8	41.27
23/32	18.26	7/8	22.22	1 1/4	31.75	1 5/8	1 5/8	3/16	4.76	3/16	4.76	1 5/8	41.27
3/4	19.05	7/8	22.22	1 1/4	31.75	1 5/8	1 5/8	3/16	4.76	3/16	4.76	1 5/8	41.27
25/32	19.84	7/8	22.22	1 1/4	31.75	1 5/8	1 5/8	3/16	4.76	3/16	4.76	1 5/8	41.27
13/16	20.64	7/8	22.22	1 1/4	31.75	1 5/8	1 5/8	3/16	4.76	3/16	4.76	1 5/8	41.27
27/32	21.43	7/8	22.22	1 1/4	31.75	1 5/8	1 5/8	3/16	4.76	3/16	4.76	1 5/8	41.27
7/8	22.22	7/8	22.22	1 1/4	31.75	1 5/8	1 5/8	3/16	4.76	3/16	4.76	1 5/8	41.27
3/16	4.76	7/8	22.22	1 3/8	34.92	1 5/8	1 5/8	3/16	4.76	3/16	4.76	1 5/8	41.27
7/32	5.56	7/8	22.22	1 3/8	34.92	1 5/8	1 5/8	3/16	4.76	3/16	4.76	1 5/8	41.27

www.globaltungsteels.com

B		E		D		M	A	L		T		C	
inch	mm	inch	mm	inch	mm	inch	inch	inch	mm	inch	mm	inch	mm
1/4	6.35	7/8	22.22	1 3/8	34.92	1 5/8	1 5/8	3/16	4.76	3/16	4.76	1 5/8	41.27
9/32	7.14	7/8	22.22	1 3/8	34.92	1 5/8	1 5/8	3/16	4.76	3/16	4.76	1 5/8	41.27
5/16	7.94	7/8	22.22	1 3/8	34.92	1 5/8	1 5/8	3/16	4.76	3/16	4.76	1 5/8	41.27
11/32	8.73	7/8	22.22	1 3/8	34.92	1 5/8	1 5/8	3/16	4.76	3/16	4.76	1 5/8	41.27
3/8	9.52	7/8	22.22	1 3/8	34.92	1 5/8	1 5/8	3/16	4.76	3/16	4.76	1 5/8	41.27
13/32	10.32	7/8	22.22	1 3/8	34.92	1 5/8	1 5/8	3/16	4.76	3/16	4.76	1 5/8	41.27
7/16	11.11	7/8	22.22	1 3/8	34.92	1 5/8	1 5/8	3/16	4.76	3/16	4.76	1 5/8	41.27
15/32	11.91	7/8	22.22	1 3/8	34.92	1 5/8	1 5/8	3/16	4.76	3/16	4.76	1 5/8	41.27
1/2	12.70	7/8	22.22	1 3/8	34.92	1 5/8	1 5/8	3/16	4.76	3/16	4.76	1 5/8	41.27
17/32	13.49	7/8	22.22	1 3/8	34.92	1 5/8	1 5/8	3/16	4.76	3/16	4.76	1 5/8	41.27
9/16	14.29	7/8	22.22	1 3/8	34.92	1 5/8	1 5/8	3/16	4.76	3/16	4.76	1 5/8	41.27
19/32	15.08	7/8	22.22	1 3/8	34.92	1 5/8	1 5/8	3/16	4.76	3/16	4.76	1 5/8	41.27
5/8	15.87	7/8	22.22	1 3/8	34.92	1 5/8	1 5/8	3/16	4.76	3/16	4.76	1 5/8	41.27
21/32	16.67	7/8	22.22	1 3/8	34.92	1 5/8	1 5/8	3/16	4.76	3/16	4.76	1 5/8	41.27
11/16	17.46	7/8	22.22	1 3/8	34.92	1 5/8	1 5/8	3/16	4.76	3/16	4.76	1 5/8	41.27
23/32	18.26	7/8	22.22	1 3/8	34.92	1 5/8	1 5/8	3/16	4.76	3/16	4.76	1 5/8	41.27
3/4	19.05	7/8	22.22	1 3/8	34.92	1 5/8	1 5/8	3/16	4.76	3/16	4.76	1 5/8	41.27
25/32	19.84	7/8	22.22	1 3/8	34.92	1 5/8	1 5/8	3/16	4.76	3/16	4.76	1 5/8	41.27
13/16	20.64	7/8	22.22	1 3/8	34.92	1 5/8	1 5/8	3/16	4.76	3/16	4.76	1 5/8	41.27
27/32	21.43	7/8	22.22	1 3/8	34.92	1 5/8	1 5/8	3/16	4.76	3/16	4.76	1 5/8	41.27
7/8	22.22	7/8	22.22	1 3/8	34.92	1 5/8	1 5/8	3/16	4.76	3/16	4.76	1 5/8	41.27
3/16	4.76	3/4	19.05	29/32	23.02	1 5/8	1 5/8	3/16	4.76	3/16	4.76	1 5/8	41.27
7/32	5.56	3/4	19.05	29/32	23.02	1 5/8	1 5/8	3/16	4.76	3/16	4.76	1 5/8	41.27
1/4	6.35	3/4	19.05	29/32	23.02	1 5/8	1 5/8	3/16	4.76	3/16	4.76	1 5/8	41.27
9/32	7.14	3/4	19.05	29/32	23.02	1 5/8	1 5/8	3/16	4.76	3/16	4.76	1 5/8	41.27
5/16	7.94	3/4	19.05	29/32	23.02	1 5/8	1 5/8	3/16	4.76	3/16	4.76	1 5/8	41.27
11/32	8.73	3/4	19.05	29/32	23.02	1 5/8	1 5/8	3/16	4.76	3/16	4.76	1 5/8	41.27
3/8	9.52	3/4	19.05	29/32	23.02	1 5/8	1 5/8	3/16	4.76	3/16	4.76	1 5/8	41.27
13/32	10.32	3/4	19.05	29/32	23.02	1 5/8	1 5/8	3/16	4.76	3/16	4.76	1 5/8	41.27
7/16	11.11	3/4	19.05	29/32	23.02	1 5/8	1 5/8	3/16	4.76	3/16	4.76	1 5/8	41.27
15/32	11.91	3/4	19.05	29/32	23.02	1 5/8	1 5/8	3/16	4.76	3/16	4.76	1 5/8	41.27
1/2	12.70	3/4	19.05	29/32	23.02	1 5/8	1 5/8	3/16	4.76	3/16	4.76	1 5/8	41.27
17/32	13.49	3/4	19.05	29/32	23.02	1 5/8	1 5/8	3/16	4.76	3/16	4.76	1 5/8	41.27
9/16	14.29	3/4	19.05	29/32	23.02	1 5/8	1 5/8	3/16	4.76	3/16	4.76	1 5/8	41.27
19/32	15.08	3/4	19.05	29/32	23.02	1 5/8	1 5/8	3/16	4.76	3/16	4.76	1 5/8	41.27
5/8	15.87	3/4	19.05	29/32	23.02	1 5/8	1 5/8	3/16	4.76	3/16	4.76	1 5/8	41.27
21/32	16.67	3/4	19.05	29/32	23.02	1 5/8	1 5/8	3/16	4.76	3/16	4.76	1 5/8	41.27
11/16	17.46	3/4	19.05	29/32	23.02	1 5/8	1 5/8	3/16	4.76	3/16	4.76	1 5/8	41.27
23/32	18.26	3/4	19.05	29/32	23.02	1 5/8	1 5/8	3/16	4.76	3/16	4.76	1 5/8	41.27
3/4	19.05	3/4	19.05	29/32	23.02	1 5/8	1 5/8	3/16	4.76	3/16	4.76	1 5/8	41.27
3/16	4.76	3/4	19.05	15/16	23.81	1 5/8	1 5/8	3/16	4.76	3/16	4.76	1 5/8	41.27
7/32	5.56	3/4	19.05	15/16	23.81	1 5/8	1 5/8	3/16	4.76	3/16	4.76	1 5/8	41.27
1/4	6.35	3/4	19.05	15/16	23.81	1 5/8	1 5/8	3/16	4.76	3/16	4.76	1 5/8	41.27
9/32	7.14	3/4	19.05	15/16	23.81	1 5/8	1 5/8	3/16	4.76	3/16	4.76	1 5/8	41.27
5/16	7.94	3/4	19.05	15/16	23.81	1 5/8	1 5/8	3/16	4.76	3/16	4.76	1 5/8	41.27

www.globaltungsten.com

B		E		D		M	A	L		T		C	
inch	mm	inch	mm	inch	mm	inch	inch	inch	mm	inch	mm	inch	mm
11/32	8.73	3/4	19.05	15/16	23.81	1 5/8	1 5/8	3/16	4.76	3/16	4.76	1 5/8	41.27
3/8	9.52	3/4	19.05	15/16	23.81	1 5/8	1 5/8	3/16	4.76	3/16	4.76	1 5/8	41.27
13/32	10.32	3/4	19.05	15/16	23.81	1 5/8	1 5/8	3/16	4.76	3/16	4.76	1 5/8	41.27
7/16	11.11	3/4	19.05	15/16	23.81	1 5/8	1 5/8	3/16	4.76	3/16	4.76	1 5/8	41.27
15/32	11.91	3/4	19.05	15/16	23.81	1 5/8	1 5/8	3/16	4.76	3/16	4.76	1 5/8	41.27
1/2	12.70	3/4	19.05	15/16	23.81	1 5/8	1 5/8	3/16	4.76	3/16	4.76	1 5/8	41.27
17/32	13.49	3/4	19.05	15/16	23.81	1 5/8	1 5/8	3/16	4.76	3/16	4.76	1 5/8	41.27
9/16	14.29	3/4	19.05	15/16	23.81	1 5/8	1 5/8	3/16	4.76	3/16	4.76	1 5/8	41.27
19/32	15.08	3/4	19.05	15/16	23.81	1 5/8	1 5/8	3/16	4.76	3/16	4.76	1 5/8	41.27
5/8	15.87	3/4	19.05	15/16	23.81	1 5/8	1 5/8	3/16	4.76	3/16	4.76	1 5/8	41.27
21/32	16.67	3/4	19.05	15/16	23.81	1 5/8	1 5/8	3/16	4.76	3/16	4.76	1 5/8	41.27
11/16	17.46	3/4	19.05	15/16	23.81	1 5/8	1 5/8	3/16	4.76	3/16	4.76	1 5/8	41.27
23/32	18.26	3/4	19.05	15/16	23.81	1 5/8	1 5/8	3/16	4.76	3/16	4.76	1 5/8	41.27
3/4	19.05	3/4	19.05	15/16	23.81	1 5/8	1 5/8	3/16	4.76	3/16	4.76	1 5/8	41.27
3/16	4.76	3/4	19.05	31/32	24.61	1 5/8	1 5/8	3/16	4.76	3/16	4.76	1 5/8	41.27
7/32	5.56	3/4	19.05	31/32	24.61	1 5/8	1 5/8	3/16	4.76	3/16	4.76	1 5/8	41.27
1/4	6.35	3/4	19.05	31/32	24.61	1 5/8	1 5/8	3/16	4.76	3/16	4.76	1 5/8	41.27
9/32	7.14	3/4	19.05	31/32	24.61	1 5/8	1 5/8	3/16	4.76	3/16	4.76	1 5/8	41.27
5/16	7.94	3/4	19.05	31/32	24.61	1 5/8	1 5/8	3/16	4.76	3/16	4.76	1 5/8	41.27
11/32	8.73	3/4	19.05	31/32	24.61	1 5/8	1 5/8	3/16	4.76	3/16	4.76	1 5/8	41.27
3/8	9.52	3/4	19.05	31/32	24.61	1 5/8	1 5/8	3/16	4.76	3/16	4.76	1 5/8	41.27
13/32	10.32	3/4	19.05	31/32	24.61	1 5/8	1 5/8	3/16	4.76	3/16	4.76	1 5/8	41.27
7/16	11.11	3/4	19.05	31/32	24.61	1 5/8	1 5/8	3/16	4.76	3/16	4.76	1 5/8	41.27
15/32	11.91	3/4	19.05	31/32	24.61	1 5/8	1 5/8	3/16	4.76	3/16	4.76	1 5/8	41.27
1/2	12.70	3/4	19.05	31/32	24.61	1 5/8	1 5/8	3/16	4.76	3/16	4.76	1 5/8	41.27
17/32	13.49	3/4	19.05	31/32	24.61	1 5/8	1 5/8	3/16	4.76	3/16	4.76	1 5/8	41.27
9/16	14.29	3/4	19.05	31/32	24.61	1 5/8	1 5/8	3/16	4.76	3/16	4.76	1 5/8	41.27
19/32	15.08	3/4	19.05	31/32	24.61	1 5/8	1 5/8	3/16	4.76	3/16	4.76	1 5/8	41.27
5/8	15.87	3/4	19.05	31/32	24.61	1 5/8	1 5/8	3/16	4.76	3/16	4.76	1 5/8	41.27
21/32	16.67	3/4	19.05	31/32	24.61	1 5/8	1 5/8	3/16	4.76	3/16	4.76	1 5/8	41.27
11/16	17.46	3/4	19.05	31/32	24.61	1 5/8	1 5/8	3/16	4.76	3/16	4.76	1 5/8	41.27
23/32	18.26	3/4	19.05	31/32	24.61	1 5/8	1 5/8	3/16	4.76	3/16	4.76	1 5/8	41.27
3/4	19.05	3/4	19.05	31/32	24.61	1 5/8	1 5/8	3/16	4.76	3/16	4.76	1 5/8	41.27
3/16	4.76	3/4	19.05	1	25.40	1 5/8	1 5/8	3/16	4.76	3/16	4.76	1 5/8	41.27
7/32	5.56	3/4	19.05	1	25.40	1 5/8	1 5/8	3/16	4.76	3/16	4.76	1 5/8	41.27
1/4	6.35	3/4	19.05	1	25.40	1 5/8	1 5/8	3/16	4.76	3/16	4.76	1 5/8	41.27
9/32	7.14	3/4	19.05	1	25.40	1 5/8	1 5/8	3/16	4.76	3/16	4.76	1 5/8	41.27
5/16	7.94	3/4	19.05	1	25.40	1 5/8	1 5/8	3/16	4.76	3/16	4.76	1 5/8	41.27
11/32	8.73	3/4	19.05	1	25.40	1 5/8	1 5/8	3/16	4.76	3/16	4.76	1 5/8	41.27
3/8	9.52	3/4	19.05	1	25.40	1 5/8	1 5/8	3/16	4.76	3/16	4.76	1 5/8	41.27
13/32	10.32	3/4	19.05	1	25.40	1 5/8	1 5/8	3/16	4.76	3/16	4.76	1 5/8	41.27
7/16	11.11	3/4	19.05	1	25.40	1 5/8	1 5/8	3/16	4.76	3/16	4.76	1 5/8	41.27
15/32	11.91	3/4	19.05	1	25.40	1 5/8	1 5/8	3/16	4.76	3/16	4.76	1 5/8	41.27
1/2	12.70	3/4	19.05	1	25.40	1 5/8	1 5/8	3/16	4.76	3/16	4.76	1 5/8	41.27
17/32	13.49	3/4	19.05	1	25.40	1 5/8	1 5/8	3/16	4.76	3/16	4.76	1 5/8	41.27

www.globaltungsten.com

B		E		D		M	A	L		T		C	
inch	mm	inch	mm	inch	mm	inch	inch	inch	mm	inch	mm	inch	mm
9/16	14.29	3/4	19.05	1	25.40	1 5/8	1 5/8	3/16	4.76	3/16	4.76	1 5/8	41.27
19/32	15.08	3/4	19.05	1	25.40	1 5/8	1 5/8	3/16	4.76	3/16	4.76	1 5/8	41.27
5/8	15.87	3/4	19.05	1	25.40	1 5/8	1 5/8	3/16	4.76	3/16	4.76	1 5/8	41.27
21/32	16.67	3/4	19.05	1	25.40	1 5/8	1 5/8	3/16	4.76	3/16	4.76	1 5/8	41.27
11/16	17.46	3/4	19.05	1	25.40	1 5/8	1 5/8	3/16	4.76	3/16	4.76	1 5/8	41.27
23/32	18.26	3/4	19.05	1	25.40	1 5/8	1 5/8	3/16	4.76	3/16	4.76	1 5/8	41.27
3/4	19.05	3/4	19.05	1	25.40	1 5/8	1 5/8	3/16	4.76	3/16	4.76	1 5/8	41.27
3/16	4.76	3/4	19.05	1 1/8	28.57	1 5/8	1 5/8	3/16	4.76	3/16	4.76	1 5/8	41.27
7/32	5.56	3/4	19.05	1 1/8	28.57	1 5/8	1 5/8	3/16	4.76	3/16	4.76	1 5/8	41.27
1/4	6.35	3/4	19.05	1 1/8	28.57	1 5/8	1 5/8	3/16	4.76	3/16	4.76	1 5/8	41.27
9/32	7.14	3/4	19.05	1 1/8	28.57	1 5/8	1 5/8	3/16	4.76	3/16	4.76	1 5/8	41.27
5/16	7.94	3/4	19.05	1 1/8	28.57	1 5/8	1 5/8	3/16	4.76	3/16	4.76	1 5/8	41.27
11/32	8.73	3/4	19.05	1 1/8	28.57	1 5/8	1 5/8	3/16	4.76	3/16	4.76	1 5/8	41.27
3/8	9.52	3/4	19.05	1 1/8	28.57	1 5/8	1 5/8	3/16	4.76	3/16	4.76	1 5/8	41.27
13/32	10.32	3/4	19.05	1 1/8	28.57	1 5/8	1 5/8	3/16	4.76	3/16	4.76	1 5/8	41.27
7/16	11.11	3/4	19.05	1 1/8	28.57	1 5/8	1 5/8	3/16	4.76	3/16	4.76	1 5/8	41.27
15/32	11.91	3/4	19.05	1 1/8	28.57	1 5/8	1 5/8	3/16	4.76	3/16	4.76	1 5/8	41.27
1/2	12.70	3/4	19.05	1 1/8	28.57	1 5/8	1 5/8	3/16	4.76	3/16	4.76	1 5/8	41.27
17/32	13.49	3/4	19.05	1 1/8	28.57	1 5/8	1 5/8	3/16	4.76	3/16	4.76	1 5/8	41.27
9/16	14.29	3/4	19.05	1 1/8	28.57	1 5/8	1 5/8	3/16	4.76	3/16	4.76	1 5/8	41.27
19/32	15.08	3/4	19.05	1 1/8	28.57	1 5/8	1 5/8	3/16	4.76	3/16	4.76	1 5/8	41.27
5/8	15.87	3/4	19.05	1 1/8	28.57	1 5/8	1 5/8	3/16	4.76	3/16	4.76	1 5/8	41.27
21/32	16.67	3/4	19.05	1 1/8	28.57	1 5/8	1 5/8	3/16	4.76	3/16	4.76	1 5/8	41.27
11/16	17.46	3/4	19.05	1 1/8	28.57	1 5/8	1 5/8	3/16	4.76	3/16	4.76	1 5/8	41.27
23/32	18.26	3/4	19.05	1 1/8	28.57	1 5/8	1 5/8	3/16	4.76	3/16	4.76	1 5/8	41.27
3/4	19.05	3/4	19.05	1 1/8	28.57	1 5/8	1 5/8	3/16	4.76	3/16	4.76	1 5/8	41.27
3/16	4.76	3/4	19.05	1 1/4	31.75	1 5/8	1 5/8	3/16	4.76	3/16	4.76	1 5/8	41.27
7/32	5.56	3/4	19.05	1 1/4	31.75	1 5/8	1 5/8	3/16	4.76	3/16	4.76	1 5/8	41.27
1/4	6.35	3/4	19.05	1 1/4	31.75	1 5/8	1 5/8	3/16	4.76	3/16	4.76	1 5/8	41.27
9/32	7.14	3/4	19.05	1 1/4	31.75	1 5/8	1 5/8	3/16	4.76	3/16	4.76	1 5/8	41.27
5/16	7.94	3/4	19.05	1 1/4	31.75	1 5/8	1 5/8	3/16	4.76	3/16	4.76	1 5/8	41.27
11/32	8.73	3/4	19.05	1 1/4	31.75	1 5/8	1 5/8	3/16	4.76	3/16	4.76	1 5/8	41.27
3/8	9.52	3/4	19.05	1 1/4	31.75	1 5/8	1 5/8	3/16	4.76	3/16	4.76	1 5/8	41.27
13/32	10.32	3/4	19.05	1 1/4	31.75	1 5/8	1 5/8	3/16	4.76	3/16	4.76	1 5/8	41.27
7/16	11.11	3/4	19.05	1 1/4	31.75	1 5/8	1 5/8	3/16	4.76	3/16	4.76	1 5/8	41.27
15/32	11.91	3/4	19.05	1 1/4	31.75	1 5/8	1 5/8	3/16	4.76	3/16	4.76	1 5/8	41.27
1/2	12.70	3/4	19.05	1 1/4	31.75	1 5/8	1 5/8	3/16	4.76	3/16	4.76	1 5/8	41.27
17/32	13.49	3/4	19.05	1 1/4	31.75	1 5/8	1 5/8	3/16	4.76	3/16	4.76	1 5/8	41.27
9/16	14.29	3/4	19.05	1 1/4	31.75	1 5/8	1 5/8	3/16	4.76	3/16	4.76	1 5/8	41.27
19/32	15.08	3/4	19.05	1 1/4	31.75	1 5/8	1 5/8	3/16	4.76	3/16	4.76	1 5/8	41.27
5/8	15.87	3/4	19.05	1 1/4	31.75	1 5/8	1 5/8	3/16	4.76	3/16	4.76	1 5/8	41.27
21/32	16.67	3/4	19.05	1 1/4	31.75	1 5/8	1 5/8	3/16	4.76	3/16	4.76	1 5/8	41.27
11/16	17.46	3/4	19.05	1 1/4	31.75	1 5/8	1 5/8	3/16	4.76	3/16	4.76	1 5/8	41.27
23/32	18.26	3/4	19.05	1 1/4	31.75	1 5/8	1 5/8	3/16	4.76	3/16	4.76	1 5/8	41.27
3/4	19.05	3/4	19.05	1 1/4	31.75	1 5/8	1 5/8	3/16	4.76	3/16	4.76	1 5/8	41.27

www.globaltungsten.com

B		E		D		M	A	L		T		C	
inch	mm	inch	mm	inch	mm	inch	inch	inch	mm	inch	mm	inch	mm
3/16	4.76	3/4	19.05	1 3/8	34.92	1 5/8	1 5/8	3/16	4.76	3/16	4.76	1 5/8	41.27
7/32	5.56	3/4	19.05	1 3/8	34.92	1 5/8	1 5/8	3/16	4.76	3/16	4.76	1 5/8	41.27
1/4	6.35	3/4	19.05	1 3/8	34.92	1 5/8	1 5/8	3/16	4.76	3/16	4.76	1 5/8	41.27
9/32	7.14	3/4	19.05	1 3/8	34.92	1 5/8	1 5/8	3/16	4.76	3/16	4.76	1 5/8	41.27
5/16	7.94	3/4	19.05	1 3/8	34.92	1 5/8	1 5/8	3/16	4.76	3/16	4.76	1 5/8	41.27
11/32	8.73	3/4	19.05	1 3/8	34.92	1 5/8	1 5/8	3/16	4.76	3/16	4.76	1 5/8	41.27
3/8	9.52	3/4	19.05	1 3/8	34.92	1 5/8	1 5/8	3/16	4.76	3/16	4.76	1 5/8	41.27
13/32	10.32	3/4	19.05	1 3/8	34.92	1 5/8	1 5/8	3/16	4.76	3/16	4.76	1 5/8	41.27
7/16	11.11	3/4	19.05	1 3/8	34.92	1 5/8	1 5/8	3/16	4.76	3/16	4.76	1 5/8	41.27
15/32	11.91	3/4	19.05	1 3/8	34.92	1 5/8	1 5/8	3/16	4.76	3/16	4.76	1 5/8	41.27
1/2	12.70	3/4	19.05	1 3/8	34.92	1 5/8	1 5/8	3/16	4.76	3/16	4.76	1 5/8	41.27
17/32	13.49	3/4	19.05	1 3/8	34.92	1 5/8	1 5/8	3/16	4.76	3/16	4.76	1 5/8	41.27
9/16	14.29	3/4	19.05	1 3/8	34.92	1 5/8	1 5/8	3/16	4.76	3/16	4.76	1 5/8	41.27
19/32	15.08	3/4	19.05	1 3/8	34.92	1 5/8	1 5/8	3/16	4.76	3/16	4.76	1 5/8	41.27
5/8	15.87	3/4	19.05	1 3/8	34.92	1 5/8	1 5/8	3/16	4.76	3/16	4.76	1 5/8	41.27
21/32	16.67	3/4	19.05	1 3/8	34.92	1 5/8	1 5/8	3/16	4.76	3/16	4.76	1 5/8	41.27
11/16	17.46	3/4	19.05	1 3/8	34.92	1 5/8	1 5/8	3/16	4.76	3/16	4.76	1 5/8	41.27
23/32	18.26	3/4	19.05	1 3/8	34.92	1 5/8	1 5/8	3/16	4.76	3/16	4.76	1 5/8	41.27
3/4	19.05	3/4	19.05	1 3/8	34.92	1 5/8	1 5/8	3/16	4.76	3/16	4.76	1 5/8	41.27
3/16	4.76	5/8	15.87	25/32	19.84	1 5/8	1 5/8	3/16	4.76	3/16	4.76	1 5/8	41.27
3/16	4.76	5/8	15.87	13/16	20.64	1 5/8	1 5/8	3/16	4.76	3/16	4.76	1 5/8	41.27
3/16	4.76	5/8	15.87	27/32	21.43	1 5/8	1 5/8	3/16	4.76	3/16	4.76	1 5/8	41.27
3/16	4.76	5/8	15.87	7/8	22.22	1 5/8	1 5/8	3/16	4.76	3/16	4.76	1 5/8	41.27
3/16	4.76	5/8	15.87	29/32	23.02	1 5/8	1 5/8	3/16	4.76	3/16	4.76	1 5/8	41.27
3/16	4.76	5/8	15.87	15/16	23.81	1 5/8	1 5/8	3/16	4.76	3/16	4.76	1 5/8	41.27
3/16	4.76	5/8	15.87	31/32	24.61	1 5/8	1 5/8	3/16	4.76	3/16	4.76	1 5/8	41.27
3/16	4.76	5/8	15.87	1	25.40	1 5/8	1 5/8	3/16	4.76	3/16	4.76	1 5/8	41.27
3/16	4.76	5/8	15.87	1 1/8	28.57	1 5/8	1 5/8	3/16	4.76	3/16	4.76	1 5/8	41.27
3/16	4.76	5/8	15.87	1 1/4	31.75	1 5/8	1 5/8	3/16	4.76	3/16	4.76	1 5/8	41.27
3/16	4.76	5/8	15.87	1 3/8	34.92	1 5/8	1 5/8	3/16	4.76	3/16	4.76	1 5/8	41.27
7/32	5.56	5/8	15.87	25/32	19.84	1 5/8	1 5/8	3/16	4.76	3/16	4.76	1 5/8	41.27
7/32	5.56	5/8	15.87	13/16	20.64	1 5/8	1 5/8	3/16	4.76	3/16	4.76	1 5/8	41.27
7/32	5.56	5/8	15.87	27/32	21.43	1 5/8	1 5/8	3/16	4.76	3/16	4.76	1 5/8	41.27
7/32	5.56	5/8	15.87	7/8	22.22	1 5/8	1 5/8	3/16	4.76	3/16	4.76	1 5/8	41.27
7/32	5.56	5/8	15.87	29/32	23.02	1 5/8	1 5/8	3/16	4.76	3/16	4.76	1 5/8	41.27
7/32	5.56	5/8	15.87	15/16	23.81	1 5/8	1 5/8	3/16	4.76	3/16	4.76	1 5/8	41.27
7/32	5.56	5/8	15.87	31/32	24.61	1 5/8	1 5/8	3/16	4.76	3/16	4.76	1 5/8	41.27
7/32	5.56	5/8	15.87	1	25.40	1 5/8	1 5/8	3/16	4.76	3/16	4.76	1 5/8	41.27
7/32	5.56	5/8	15.87	1 1/8	28.57	1 5/8	1 5/8	3/16	4.76	3/16	4.76	1 5/8	41.27
7/32	5.56	5/8	15.87	1 1/4	31.75	1 5/8	1 5/8	3/16	4.76	3/16	4.76	1 5/8	41.27
7/32	5.56	5/8	15.87	1 3/8	34.92	1 5/8	1 5/8	3/16	4.76	3/16	4.76	1 5/8	41.27
1/4	6.35	5/8	15.87	25/32	19.84	1 5/8	1 5/8	3/16	4.76	3/16	4.76	1 5/8	41.27
1/4	6.35	5/8	15.87	13/16	20.64	1 5/8	1 5/8	3/16	4.76	3/16	4.76	1 5/8	41.27
1/4	6.35	5/8	15.87	27/32	21.43	1 5/8	1 5/8	3/16	4.76	3/16	4.76	1 5/8	41.27
1/4	6.35	5/8	15.87	7/8	22.22	1 5/8	1 5/8	3/16	4.76	3/16	4.76	1 5/8	41.27

www.globaltungsteins.com

B		E		D		M	A	L		T		C	
inch	mm	inch	mm	inch	mm	inch	inch	inch	mm	inch	mm	inch	mm
1/4	6.35	5/8	15.87	29/32	23.02	1 5/8	1 5/8	3/16	4.76	3/16	4.76	1 5/8	41.27
1/4	6.35	5/8	15.87	15/16	23.81	1 5/8	1 5/8	3/16	4.76	3/16	4.76	1 5/8	41.27
1/4	6.35	5/8	15.87	31/32	24.61	1 5/8	1 5/8	3/16	4.76	3/16	4.76	1 5/8	41.27
1/4	6.35	5/8	15.87	1	25.40	1 5/8	1 5/8	3/16	4.76	3/16	4.76	1 5/8	41.27
1/4	6.35	5/8	15.87	1 1/8	28.57	1 5/8	1 5/8	3/16	4.76	3/16	4.76	1 5/8	41.27
1/4	6.35	5/8	15.87	1 1/4	31.75	1 5/8	1 5/8	3/16	4.76	3/16	4.76	1 5/8	41.27
1/4	6.35	5/8	15.87	1 3/8	34.92	1 5/8	1 5/8	3/16	4.76	3/16	4.76	1 5/8	41.27
9/32	7.14	5/8	15.87	25/32	19.84	1 5/8	1 5/8	3/16	4.76	3/16	4.76	1 5/8	41.27
9/32	7.14	5/8	15.87	13/16	20.64	1 5/8	1 5/8	3/16	4.76	3/16	4.76	1 5/8	41.27
9/32	7.14	5/8	15.87	27/32	21.43	1 5/8	1 5/8	3/16	4.76	3/16	4.76	1 5/8	41.27
9/32	7.14	5/8	15.87	7/8	22.22	1 5/8	1 5/8	3/16	4.76	3/16	4.76	1 5/8	41.27
9/32	7.14	5/8	15.87	29/32	23.02	1 5/8	1 5/8	3/16	4.76	3/16	4.76	1 5/8	41.27
9/32	7.14	5/8	15.87	15/16	23.81	1 5/8	1 5/8	3/16	4.76	3/16	4.76	1 5/8	41.27
9/32	7.14	5/8	15.87	31/32	24.61	1 5/8	1 5/8	3/16	4.76	3/16	4.76	1 5/8	41.27
9/32	7.14	5/8	15.87	1	25.40	1 5/8	1 5/8	3/16	4.76	3/16	4.76	1 5/8	41.27
9/32	7.14	5/8	15.87	1 1/8	28.57	1 5/8	1 5/8	3/16	4.76	3/16	4.76	1 5/8	41.27
9/32	7.14	5/8	15.87	1 1/4	31.75	1 5/8	1 5/8	3/16	4.76	3/16	4.76	1 5/8	41.27
9/32	7.14	5/8	15.87	1 3/8	34.92	1 5/8	1 5/8	3/16	4.76	3/16	4.76	1 5/8	41.27
5/16	7.94	5/8	15.87	25/32	19.84	1 5/8	1 5/8	3/16	4.76	3/16	4.76	1 5/8	41.27
5/16	7.94	5/8	15.87	13/16	20.64	1 5/8	1 5/8	3/16	4.76	3/16	4.76	1 5/8	41.27
5/16	7.94	5/8	15.87	27/32	21.43	1 5/8	1 5/8	3/16	4.76	3/16	4.76	1 5/8	41.27
5/16	7.94	5/8	15.87	7/8	22.22	1 5/8	1 5/8	3/16	4.76	3/16	4.76	1 5/8	41.27
5/16	7.94	5/8	15.87	29/32	23.02	1 5/8	1 5/8	3/16	4.76	3/16	4.76	1 5/8	41.27
5/16	7.94	5/8	15.87	15/16	23.81	1 5/8	1 5/8	3/16	4.76	3/16	4.76	1 5/8	41.27
5/16	7.94	5/8	15.87	31/32	24.61	1 5/8	1 5/8	3/16	4.76	3/16	4.76	1 5/8	41.27
5/16	7.94	5/8	15.87	1	25.40	1 5/8	1 5/8	3/16	4.76	3/16	4.76	1 5/8	41.27
5/16	7.94	5/8	15.87	1 1/8	28.57	1 5/8	1 5/8	3/16	4.76	3/16	4.76	1 5/8	41.27
5/16	7.94	5/8	15.87	1 1/4	31.75	1 5/8	1 5/8	3/16	4.76	3/16	4.76	1 5/8	41.27
5/16	7.94	5/8	15.87	1 3/8	34.92	1 5/8	1 5/8	3/16	4.76	3/16	4.76	1 5/8	41.27
11/32	8.73	5/8	15.87	25/32	19.84	1 5/8	1 5/8	3/16	4.76	3/16	4.76	1 5/8	41.27
11/32	8.73	5/8	15.87	13/16	20.64	1 5/8	1 5/8	3/16	4.76	3/16	4.76	1 5/8	41.27
11/32	8.73	5/8	15.87	27/32	21.43	1 5/8	1 5/8	3/16	4.76	3/16	4.76	1 5/8	41.27
11/32	8.73	5/8	15.87	7/8	22.22	1 5/8	1 5/8	3/16	4.76	3/16	4.76	1 5/8	41.27
11/32	8.73	5/8	15.87	29/32	23.02	1 5/8	1 5/8	3/16	4.76	3/16	4.76	1 5/8	41.27
11/32	8.73	5/8	15.87	15/16	23.81	1 5/8	1 5/8	3/16	4.76	3/16	4.76	1 5/8	41.27
11/32	8.73	5/8	15.87	31/32	24.61	1 5/8	1 5/8	3/16	4.76	3/16	4.76	1 5/8	41.27
11/32	8.73	5/8	15.87	1	25.40	1 5/8	1 5/8	3/16	4.76	3/16	4.76	1 5/8	41.27
11/32	8.73	5/8	15.87	1 1/8	28.57	1 5/8	1 5/8	3/16	4.76	3/16	4.76	1 5/8	41.27
11/32	8.73	5/8	15.87	1 1/4	31.75	1 5/8	1 5/8	3/16	4.76	3/16	4.76	1 5/8	41.27
11/32	8.73	5/8	15.87	1 3/8	34.92	1 5/8	1 5/8	3/16	4.76	3/16	4.76	1 5/8	41.27
3/8	9.52	5/8	15.87	25/32	19.84	1 5/8	1 5/8	3/16	4.76	3/16	4.76	1 5/8	41.27
3/8	9.52	5/8	15.87	13/16	20.64	1 5/8	1 5/8	3/16	4.76	3/16	4.76	1 5/8	41.27
3/8	9.52	5/8	15.87	27/32	21.43	1 5/8	1 5/8	3/16	4.76	3/16	4.76	1 5/8	41.27
3/8	9.52	5/8	15.87	7/8	22.22	1 5/8	1 5/8	3/16	4.76	3/16	4.76	1 5/8	41.27
3/8	9.52	5/8	15.87	29/32	23.02	1 5/8	1 5/8	3/16	4.76	3/16	4.76	1 5/8	41.27

www.globaltungsten.com

B		E		D		M	A	L		T		C	
inch	mm	inch	mm	inch	mm	inch	inch	inch	mm	inch	mm	inch	mm
3/8	9.52	5/8	15.87	15/16	23.81	1 5/8	1 5/8	3/16	4.76	3/16	4.76	1 5/8	41.27
3/8	9.52	5/8	15.87	31/32	24.61	1 5/8	1 5/8	3/16	4.76	3/16	4.76	1 5/8	41.27
3/8	9.52	5/8	15.87	1	25.40	1 5/8	1 5/8	3/16	4.76	3/16	4.76	1 5/8	41.27
3/8	9.52	5/8	15.87	1 1/8	28.57	1 5/8	1 5/8	3/16	4.76	3/16	4.76	1 5/8	41.27
3/8	9.52	5/8	15.87	1 1/4	31.75	1 5/8	1 5/8	3/16	4.76	3/16	4.76	1 5/8	41.27
3/8	9.52	5/8	15.87	1 3/8	34.92	1 5/8	1 5/8	3/16	4.76	3/16	4.76	1 5/8	41.27
13/32	10.32	5/8	15.87	25/32	19.84	1 5/8	1 5/8	3/16	4.76	3/16	4.76	1 5/8	41.27
13/32	10.32	5/8	15.87	13/16	20.64	1 5/8	1 5/8	3/16	4.76	3/16	4.76	1 5/8	41.27
13/32	10.32	5/8	15.87	27/32	21.43	1 5/8	1 5/8	3/16	4.76	3/16	4.76	1 5/8	41.27
13/32	10.32	5/8	15.87	7/8	22.22	1 5/8	1 5/8	3/16	4.76	3/16	4.76	1 5/8	41.27
13/32	10.32	5/8	15.87	29/32	23.02	1 5/8	1 5/8	3/16	4.76	3/16	4.76	1 5/8	41.27
13/32	10.32	5/8	15.87	15/16	23.81	1 5/8	1 5/8	3/16	4.76	3/16	4.76	1 5/8	41.27
13/32	10.32	5/8	15.87	31/32	24.61	1 5/8	1 5/8	3/16	4.76	3/16	4.76	1 5/8	41.27
13/32	10.32	5/8	15.87	1	25.40	1 5/8	1 5/8	3/16	4.76	3/16	4.76	1 5/8	41.27
13/32	10.32	5/8	15.87	1 1/8	28.57	1 5/8	1 5/8	3/16	4.76	3/16	4.76	1 5/8	41.27
13/32	10.32	5/8	15.87	1 1/4	31.75	1 5/8	1 5/8	3/16	4.76	3/16	4.76	1 5/8	41.27
13/32	10.32	5/8	15.87	1 3/8	34.92	1 5/8	1 5/8	3/16	4.76	3/16	4.76	1 5/8	41.27
7/16	11.11	5/8	15.87	25/32	19.84	1 5/8	1 5/8	3/16	4.76	3/16	4.76	1 5/8	41.27
7/16	11.11	5/8	15.87	13/16	20.64	1 5/8	1 5/8	3/16	4.76	3/16	4.76	1 5/8	41.27
7/16	11.11	5/8	15.87	27/32	21.43	1 5/8	1 5/8	3/16	4.76	3/16	4.76	1 5/8	41.27
7/16	11.11	5/8	15.87	7/8	22.22	1 5/8	1 5/8	3/16	4.76	3/16	4.76	1 5/8	41.27
7/16	11.11	5/8	15.87	29/32	23.02	1 5/8	1 5/8	3/16	4.76	3/16	4.76	1 5/8	41.27
7/16	11.11	5/8	15.87	15/16	23.81	1 5/8	1 5/8	3/16	4.76	3/16	4.76	1 5/8	41.27
7/16	11.11	5/8	15.87	31/32	24.61	1 5/8	1 5/8	3/16	4.76	3/16	4.76	1 5/8	41.27
7/16	11.11	5/8	15.87	1	25.40	1 5/8	1 5/8	3/16	4.76	3/16	4.76	1 5/8	41.27
7/16	11.11	5/8	15.87	1 1/8	28.57	1 5/8	1 5/8	3/16	4.76	3/16	4.76	1 5/8	41.27
7/16	11.11	5/8	15.87	1 1/4	31.75	1 5/8	1 5/8	3/16	4.76	3/16	4.76	1 5/8	41.27
7/16	11.11	5/8	15.87	1 3/8	34.92	1 5/8	1 5/8	3/16	4.76	3/16	4.76	1 5/8	41.27
15/32	11.91	5/8	15.87	25/32	19.84	1 5/8	1 5/8	3/16	4.76	3/16	4.76	1 5/8	41.27
15/32	11.91	5/8	15.87	13/16	20.64	1 5/8	1 5/8	3/16	4.76	3/16	4.76	1 5/8	41.27
15/32	11.91	5/8	15.87	27/32	21.43	1 5/8	1 5/8	3/16	4.76	3/16	4.76	1 5/8	41.27
15/32	11.91	5/8	15.87	7/8	22.22	1 5/8	1 5/8	3/16	4.76	3/16	4.76	1 5/8	41.27
15/32	11.91	5/8	15.87	29/32	23.02	1 5/8	1 5/8	3/16	4.76	3/16	4.76	1 5/8	41.27
15/32	11.91	5/8	15.87	15/16	23.81	1 5/8	1 5/8	3/16	4.76	3/16	4.76	1 5/8	41.27
15/32	11.91	5/8	15.87	31/32	24.61	1 5/8	1 5/8	3/16	4.76	3/16	4.76	1 5/8	41.27
15/32	11.91	5/8	15.87	1	25.40	1 5/8	1 5/8	3/16	4.76	3/16	4.76	1 5/8	41.27
15/32	11.91	5/8	15.87	1 1/8	28.57	1 5/8	1 5/8	3/16	4.76	3/16	4.76	1 5/8	41.27
15/32	11.91	5/8	15.87	1 1/4	31.75	1 5/8	1 5/8	3/16	4.76	3/16	4.76	1 5/8	41.27
15/32	11.91	5/8	15.87	1 3/8	34.92	1 5/8	1 5/8	3/16	4.76	3/16	4.76	1 5/8	41.27
1/2	12.70	5/8	15.87	25/32	19.84	1 5/8	1 5/8	3/16	4.76	3/16	4.76	1 5/8	41.27
1/2	12.70	5/8	15.87	13/16	20.64	1 5/8	1 5/8	3/16	4.76	3/16	4.76	1 5/8	41.27
1/2	12.70	5/8	15.87	27/32	21.43	1 5/8	1 5/8	3/16	4.76	3/16	4.76	1 5/8	41.27
1/2	12.70	5/8	15.87	7/8	22.22	1 5/8	1 5/8	3/16	4.76	3/16	4.76	1 5/8	41.27
1/2	12.70	5/8	15.87	29/32	23.02	1 5/8	1 5/8	3/16	4.76	3/16	4.76	1 5/8	41.27
1/2	12.70	5/8	15.87	15/16	23.81	1 5/8	1 5/8	3/16	4.76	3/16	4.76	1 5/8	41.27

www.globaltungsten.com

B		E		D		M	A	L		T		C	
inch	mm	inch	mm	inch	mm	inch	inch	inch	mm	inch	mm	inch	mm
1/2	12.70	5/8	15.87	31/32	24.61	1 5/8	1 5/8	3/16	4.76	3/16	4.76	1 5/8	41.27
1/2	12.70	5/8	15.87	1	25.40	1 5/8	1 5/8	3/16	4.76	3/16	4.76	1 5/8	41.27
1/2	12.70	5/8	15.87	1 1/8	28.57	1 5/8	1 5/8	3/16	4.76	3/16	4.76	1 5/8	41.27
1/2	12.70	5/8	15.87	1 1/4	31.75	1 5/8	1 5/8	3/16	4.76	3/16	4.76	1 5/8	41.27
1/2	12.70	5/8	15.87	1 3/8	34.92	1 5/8	1 5/8	3/16	4.76	3/16	4.76	1 5/8	41.27
17/32	13.49	5/8	15.87	25/32	19.84	1 5/8	1 5/8	3/16	4.76	3/16	4.76	1 5/8	41.27
17/32	13.49	5/8	15.87	13/16	20.64	1 5/8	1 5/8	3/16	4.76	3/16	4.76	1 5/8	41.27
17/32	13.49	5/8	15.87	27/32	21.43	1 5/8	1 5/8	3/16	4.76	3/16	4.76	1 5/8	41.27
17/32	13.49	5/8	15.87	7/8	22.22	1 5/8	1 5/8	3/16	4.76	3/16	4.76	1 5/8	41.27
17/32	13.49	5/8	15.87	29/32	23.02	1 5/8	1 5/8	3/16	4.76	3/16	4.76	1 5/8	41.27
17/32	13.49	5/8	15.87	15/16	23.81	1 5/8	1 5/8	3/16	4.76	3/16	4.76	1 5/8	41.27
17/32	13.49	5/8	15.87	31/32	24.61	1 5/8	1 5/8	3/16	4.76	3/16	4.76	1 5/8	41.27
17/32	13.49	5/8	15.87	1	25.40	1 5/8	1 5/8	3/16	4.76	3/16	4.76	1 5/8	41.27
17/32	13.49	5/8	15.87	1 1/8	28.57	1 5/8	1 5/8	3/16	4.76	3/16	4.76	1 5/8	41.27
17/32	13.49	5/8	15.87	1 1/4	31.75	1 5/8	1 5/8	3/16	4.76	3/16	4.76	1 5/8	41.27
17/32	13.49	5/8	15.87	1 3/8	34.92	1 5/8	1 5/8	3/16	4.76	3/16	4.76	1 5/8	41.27
9/16	14.29	5/8	15.87	25/32	19.84	1 5/8	1 5/8	3/16	4.76	3/16	4.76	1 5/8	41.27
9/16	14.29	5/8	15.87	13/16	20.64	1 5/8	1 5/8	3/16	4.76	3/16	4.76	1 5/8	41.27
9/16	14.29	5/8	15.87	27/32	21.43	1 5/8	1 5/8	3/16	4.76	3/16	4.76	1 5/8	41.27
9/16	14.29	5/8	15.87	7/8	22.22	1 5/8	1 5/8	3/16	4.76	3/16	4.76	1 5/8	41.27
9/16	14.29	5/8	15.87	29/32	23.02	1 5/8	1 5/8	3/16	4.76	3/16	4.76	1 5/8	41.27
9/16	14.29	5/8	15.87	15/16	23.81	1 5/8	1 5/8	3/16	4.76	3/16	4.76	1 5/8	41.27
9/16	14.29	5/8	15.87	31/32	24.61	1 5/8	1 5/8	3/16	4.76	3/16	4.76	1 5/8	41.27
9/16	14.29	5/8	15.87	1	25.40	1 5/8	1 5/8	3/16	4.76	3/16	4.76	1 5/8	41.27
9/16	14.29	5/8	15.87	1 1/8	28.57	1 5/8	1 5/8	3/16	4.76	3/16	4.76	1 5/8	41.27
9/16	14.29	5/8	15.87	1 1/4	31.75	1 5/8	1 5/8	3/16	4.76	3/16	4.76	1 5/8	41.27
9/16	14.29	5/8	15.87	1 3/8	34.92	1 5/8	1 5/8	3/16	4.76	3/16	4.76	1 5/8	41.27
19/32	15.08	5/8	15.87	25/32	19.84	1 5/8	1 5/8	3/16	4.76	3/16	4.76	1 5/8	41.27
19/32	15.08	5/8	15.87	13/16	20.64	1 5/8	1 5/8	3/16	4.76	3/16	4.76	1 5/8	41.27
19/32	15.08	5/8	15.87	27/32	21.43	1 5/8	1 5/8	3/16	4.76	3/16	4.76	1 5/8	41.27
19/32	15.08	5/8	15.87	7/8	22.22	1 5/8	1 5/8	3/16	4.76	3/16	4.76	1 5/8	41.27
19/32	15.08	5/8	15.87	29/32	23.02	1 5/8	1 5/8	3/16	4.76	3/16	4.76	1 5/8	41.27
19/32	15.08	5/8	15.87	15/16	23.81	1 5/8	1 5/8	3/16	4.76	3/16	4.76	1 5/8	41.27
19/32	15.08	5/8	15.87	31/32	24.61	1 5/8	1 5/8	3/16	4.76	3/16	4.76	1 5/8	41.27
19/32	15.08	5/8	15.87	1	25.40	1 5/8	1 5/8	3/16	4.76	3/16	4.76	1 5/8	41.27
19/32	15.08	5/8	15.87	1 1/8	28.57	1 5/8	1 5/8	3/16	4.76	3/16	4.76	1 5/8	41.27
19/32	15.08	5/8	15.87	1 1/4	31.75	1 5/8	1 5/8	3/16	4.76	3/16	4.76	1 5/8	41.27
19/32	15.08	5/8	15.87	1 3/8	34.92	1 5/8	1 5/8	3/16	4.76	3/16	4.76	1 5/8	41.27
5/8	15.87	5/8	15.87	25/32	19.84	1 5/8	1 5/8	3/16	4.76	3/16	4.76	1 5/8	41.27
5/8	15.87	5/8	15.87	13/16	20.64	1 5/8	1 5/8	3/16	4.76	3/16	4.76	1 5/8	41.27
5/8	15.87	5/8	15.87	27/32	21.43	1 5/8	1 5/8	3/16	4.76	3/16	4.76	1 5/8	41.27
5/8	15.87	5/8	15.87	7/8	22.22	1 5/8	1 5/8	3/16	4.76	3/16	4.76	1 5/8	41.27
5/8	15.87	5/8	15.87	29/32	23.02	1 5/8	1 5/8	3/16	4.76	3/16	4.76	1 5/8	41.27
5/8	15.87	5/8	15.87	15/16	23.81	1 5/8	1 5/8	3/16	4.76	3/16	4.76	1 5/8	41.27
5/8	15.87	5/8	15.87	31/32	24.61	1 5/8	1 5/8	3/16	4.76	3/16	4.76	1 5/8	41.27

www.globaltungsten.com

B		E		D		M	A	L		T		C	
inch	mm	inch	mm	inch	mm	inch	inch	inch	mm	inch	mm	inch	mm
5/8	15.87	5/8	15.87	1	25.40	1 5/8	1 5/8	3/16	4.76	3/16	4.76	1 5/8	41.27
5/8	15.87	5/8	15.87	1 1/8	28.57	1 5/8	1 5/8	3/16	4.76	3/16	4.76	1 5/8	41.27
5/8	15.87	5/8	15.87	1 1/4	31.75	1 5/8	1 5/8	3/16	4.76	3/16	4.76	1 5/8	41.27
5/8	15.87	5/8	15.87	1 3/8	34.92	1 5/8	1 5/8	3/16	4.76	3/16	4.76	1 5/8	41.27
3/16	4.76	1/2	12.70	21/32	16.67	1 5/8	1 5/8	3/16	4.76	3/16	4.76	1 5/8	41.27
3/16	4.76	1/2	12.70	11/16	17.46	1 5/8	1 5/8	3/16	4.76	3/16	4.76	1 5/8	41.27
3/16	4.76	1/2	12.70	23/32	18.26	1 5/8	1 5/8	3/16	4.76	3/16	4.76	1 5/8	41.27
3/16	4.76	1/2	12.70	3/4	19.05	1 5/8	1 5/8	3/16	4.76	3/16	4.76	1 5/8	41.27
3/16	4.76	1/2	12.70	25/32	19.84	1 5/8	1 5/8	3/16	4.76	3/16	4.76	1 5/8	41.27
3/16	4.76	1/2	12.70	13/16	20.64	1 5/8	1 5/8	3/16	4.76	3/16	4.76	1 5/8	41.27
3/16	4.76	1/2	12.70	27/32	21.43	1 5/8	1 5/8	3/16	4.76	3/16	4.76	1 5/8	41.27
3/16	4.76	1/2	12.70	7/8	22.22	1 5/8	1 5/8	3/16	4.76	3/16	4.76	1 5/8	41.27
3/16	4.76	1/2	12.70	29/32	23.02	1 5/8	1 5/8	3/16	4.76	3/16	4.76	1 5/8	41.27
3/16	4.76	1/2	12.70	15/16	23.81	1 5/8	1 5/8	3/16	4.76	3/16	4.76	1 5/8	41.27
3/16	4.76	1/2	12.70	31/32	24.61	1 5/8	1 5/8	3/16	4.76	3/16	4.76	1 5/8	41.27
3/16	4.76	1/2	12.70	1	25.40	1 5/8	1 5/8	3/16	4.76	3/16	4.76	1 5/8	41.27
3/16	4.76	1/2	12.70	1 1/8	28.57	1 5/8	1 5/8	3/16	4.76	3/16	4.76	1 5/8	41.27
3/16	4.76	1/2	12.70	1 1/4	31.75	1 5/8	1 5/8	3/16	4.76	3/16	4.76	1 5/8	41.27
3/16	4.76	1/2	12.70	1 3/8	34.92	1 5/8	1 5/8	3/16	4.76	3/16	4.76	1 5/8	41.27
7/32	5.56	1/2	12.70	21/32	16.67	1 5/8	1 5/8	3/16	4.76	3/16	4.76	1 5/8	41.27
7/32	5.56	1/2	12.70	11/16	17.46	1 5/8	1 5/8	3/16	4.76	3/16	4.76	1 5/8	41.27
7/32	5.56	1/2	12.70	23/32	18.26	1 5/8	1 5/8	3/16	4.76	3/16	4.76	1 5/8	41.27
7/32	5.56	1/2	12.70	3/4	19.05	1 5/8	1 5/8	3/16	4.76	3/16	4.76	1 5/8	41.27
7/32	5.56	1/2	12.70	25/32	19.84	1 5/8	1 5/8	3/16	4.76	3/16	4.76	1 5/8	41.27
7/32	5.56	1/2	12.70	13/16	20.64	1 5/8	1 5/8	3/16	4.76	3/16	4.76	1 5/8	41.27
7/32	5.56	1/2	12.70	27/32	21.43	1 5/8	1 5/8	3/16	4.76	3/16	4.76	1 5/8	41.27
7/32	5.56	1/2	12.70	7/8	22.22	1 5/8	1 5/8	3/16	4.76	3/16	4.76	1 5/8	41.27
7/32	5.56	1/2	12.70	29/32	23.02	1 5/8	1 5/8	3/16	4.76	3/16	4.76	1 5/8	41.27
7/32	5.56	1/2	12.70	15/16	23.81	1 5/8	1 5/8	3/16	4.76	3/16	4.76	1 5/8	41.27
7/32	5.56	1/2	12.70	31/32	24.61	1 5/8	1 5/8	3/16	4.76	3/16	4.76	1 5/8	41.27
7/32	5.56	1/2	12.70	1	25.40	1 5/8	1 5/8	3/16	4.76	3/16	4.76	1 5/8	41.27
7/32	5.56	1/2	12.70	1 1/8	28.57	1 5/8	1 5/8	3/16	4.76	3/16	4.76	1 5/8	41.27
7/32	5.56	1/2	12.70	1 1/4	31.75	1 5/8	1 5/8	3/16	4.76	3/16	4.76	1 5/8	41.27
7/32	5.56	1/2	12.70	1 3/8	34.92	1 5/8	1 5/8	3/16	4.76	3/16	4.76	1 5/8	41.27
1/4	6.35	1/2	12.70	21/32	16.67	1 5/8	1 5/8	3/16	4.76	3/16	4.76	1 5/8	41.27
1/4	6.35	1/2	12.70	11/16	17.46	1 5/8	1 5/8	3/16	4.76	3/16	4.76	1 5/8	41.27
1/4	6.35	1/2	12.70	23/32	18.26	1 5/8	1 5/8	3/16	4.76	3/16	4.76	1 5/8	41.27
1/4	6.35	1/2	12.70	3/4	19.05	1 5/8	1 5/8	3/16	4.76	3/16	4.76	1 5/8	41.27
1/4	6.35	1/2	12.70	25/32	19.84	1 5/8	1 5/8	3/16	4.76	3/16	4.76	1 5/8	41.27
1/4	6.35	1/2	12.70	13/16	20.64	1 5/8	1 5/8	3/16	4.76	3/16	4.76	1 5/8	41.27
1/4	6.35	1/2	12.70	27/32	21.43	1 5/8	1 5/8	3/16	4.76	3/16	4.76	1 5/8	41.27
1/4	6.35	1/2	12.70	7/8	22.22	1 5/8	1 5/8	3/16	4.76	3/16	4.76	1 5/8	41.27
1/4	6.35	1/2	12.70	29/32	23.02	1 5/8	1 5/8	3/16	4.76	3/16	4.76	1 5/8	41.27
1/4	6.35	1/2	12.70	15/16	23.81	1 5/8	1 5/8	3/16	4.76	3/16	4.76	1 5/8	41.27
1/4	6.35	1/2	12.70	31/32	24.61	1 5/8	1 5/8	3/16	4.76	3/16	4.76	1 5/8	41.27

www.globaltungsteins.com

B		E		D		M	A	L		T		C	
inch	mm	inch	mm	inch	mm	inch	inch	inch	mm	inch	mm	inch	mm
1/4	6.35	1/2	12.70	1	25.40	1 5/8	1 5/8	3/16	4.76	3/16	4.76	1 5/8	41.27
1/4	6.35	1/2	12.70	1 1/8	28.57	1 5/8	1 5/8	3/16	4.76	3/16	4.76	1 5/8	41.27
1/4	6.35	1/2	12.70	1 1/4	31.75	1 5/8	1 5/8	3/16	4.76	3/16	4.76	1 5/8	41.27
1/4	6.35	1/2	12.70	1 3/8	34.92	1 5/8	1 5/8	3/16	4.76	3/16	4.76	1 5/8	41.27
9/32	7.14	1/2	12.70	21/32	16.67	1 5/8	1 5/8	3/16	4.76	3/16	4.76	1 5/8	41.27
9/32	7.14	1/2	12.70	11/16	17.46	1 5/8	1 5/8	3/16	4.76	3/16	4.76	1 5/8	41.27
9/32	7.14	1/2	12.70	23/32	18.26	1 5/8	1 5/8	3/16	4.76	3/16	4.76	1 5/8	41.27
9/32	7.14	1/2	12.70	3/4	19.05	1 5/8	1 5/8	3/16	4.76	3/16	4.76	1 5/8	41.27
9/32	7.14	1/2	12.70	25/32	19.84	1 5/8	1 5/8	3/16	4.76	3/16	4.76	1 5/8	41.27
9/32	7.14	1/2	12.70	13/16	20.64	1 5/8	1 5/8	3/16	4.76	3/16	4.76	1 5/8	41.27
9/32	7.14	1/2	12.70	27/32	21.43	1 5/8	1 5/8	3/16	4.76	3/16	4.76	1 5/8	41.27
9/32	7.14	1/2	12.70	7/8	22.22	1 5/8	1 5/8	3/16	4.76	3/16	4.76	1 5/8	41.27
9/32	7.14	1/2	12.70	29/32	23.02	1 5/8	1 5/8	3/16	4.76	3/16	4.76	1 5/8	41.27
9/32	7.14	1/2	12.70	15/16	23.81	1 5/8	1 5/8	3/16	4.76	3/16	4.76	1 5/8	41.27
9/32	7.14	1/2	12.70	31/32	24.61	1 5/8	1 5/8	3/16	4.76	3/16	4.76	1 5/8	41.27
9/32	7.14	1/2	12.70	1	25.40	1 5/8	1 5/8	3/16	4.76	3/16	4.76	1 5/8	41.27
9/32	7.14	1/2	12.70	1 1/8	28.57	1 5/8	1 5/8	3/16	4.76	3/16	4.76	1 5/8	41.27
9/32	7.14	1/2	12.70	1 1/4	31.75	1 5/8	1 5/8	3/16	4.76	3/16	4.76	1 5/8	41.27
9/32	7.14	1/2	12.70	1 3/8	34.92	1 5/8	1 5/8	3/16	4.76	3/16	4.76	1 5/8	41.27
5/16	7.94	1/2	12.70	21/32	16.67	1 5/8	1 5/8	3/16	4.76	3/16	4.76	1 5/8	41.27
5/16	7.94	1/2	12.70	11/16	17.46	1 5/8	1 5/8	3/16	4.76	3/16	4.76	1 5/8	41.27
5/16	7.94	1/2	12.70	23/32	18.26	1 5/8	1 5/8	3/16	4.76	3/16	4.76	1 5/8	41.27
5/16	7.94	1/2	12.70	3/4	19.05	1 5/8	1 5/8	3/16	4.76	3/16	4.76	1 5/8	41.27
5/16	7.94	1/2	12.70	25/32	19.84	1 5/8	1 5/8	3/16	4.76	3/16	4.76	1 5/8	41.27
5/16	7.94	1/2	12.70	13/16	20.64	1 5/8	1 5/8	3/16	4.76	3/16	4.76	1 5/8	41.27
5/16	7.94	1/2	12.70	27/32	21.43	1 5/8	1 5/8	3/16	4.76	3/16	4.76	1 5/8	41.27
5/16	7.94	1/2	12.70	7/8	22.22	1 5/8	1 5/8	3/16	4.76	3/16	4.76	1 5/8	41.27
5/16	7.94	1/2	12.70	29/32	23.02	1 5/8	1 5/8	3/16	4.76	3/16	4.76	1 5/8	41.27
5/16	7.94	1/2	12.70	15/16	23.81	1 5/8	1 5/8	3/16	4.76	3/16	4.76	1 5/8	41.27
5/16	7.94	1/2	12.70	31/32	24.61	1 5/8	1 5/8	3/16	4.76	3/16	4.76	1 5/8	41.27
5/16	7.94	1/2	12.70	1	25.40	1 5/8	1 5/8	3/16	4.76	3/16	4.76	1 5/8	41.27
5/16	7.94	1/2	12.70	1 1/8	28.57	1 5/8	1 5/8	3/16	4.76	3/16	4.76	1 5/8	41.27
5/16	7.94	1/2	12.70	1 1/4	31.75	1 5/8	1 5/8	3/16	4.76	3/16	4.76	1 5/8	41.27
5/16	7.94	1/2	12.70	1 3/8	34.92	1 5/8	1 5/8	3/16	4.76	3/16	4.76	1 5/8	41.27
11/32	8.73	1/2	12.70	21/32	16.67	1 5/8	1 5/8	3/16	4.76	3/16	4.76	1 5/8	41.27
11/32	8.73	1/2	12.70	11/16	17.46	1 5/8	1 5/8	3/16	4.76	3/16	4.76	1 5/8	41.27
11/32	8.73	1/2	12.70	23/32	18.26	1 5/8	1 5/8	3/16	4.76	3/16	4.76	1 5/8	41.27
11/32	8.73	1/2	12.70	3/4	19.05	1 5/8	1 5/8	3/16	4.76	3/16	4.76	1 5/8	41.27
11/32	8.73	1/2	12.70	25/32	19.84	1 5/8	1 5/8	3/16	4.76	3/16	4.76	1 5/8	41.27
11/32	8.73	1/2	12.70	13/16	20.64	1 5/8	1 5/8	3/16	4.76	3/16	4.76	1 5/8	41.27
11/32	8.73	1/2	12.70	27/32	21.43	1 5/8	1 5/8	3/16	4.76	3/16	4.76	1 5/8	41.27
11/32	8.73	1/2	12.70	7/8	22.22	1 5/8	1 5/8	3/16	4.76	3/16	4.76	1 5/8	41.27
11/32	8.73	1/2	12.70	29/32	23.02	1 5/8	1 5/8	3/16	4.76	3/16	4.76	1 5/8	41.27
11/32	8.73	1/2	12.70	15/16	23.81	1 5/8	1 5/8	3/16	4.76	3/16	4.76	1 5/8	41.27
11/32	8.73	1/2	12.70	31/32	24.61	1 5/8	1 5/8	3/16	4.76	3/16	4.76	1 5/8	41.27

www.globaltungsten.com

B		E		D		M	A	L		T		C	
inch	mm	inch	mm	inch	mm	inch	inch	inch	mm	inch	mm	inch	mm
11/32	8.73	1/2	12.70	1	25.40	1 5/8	1 5/8	3/16	4.76	3/16	4.76	1 5/8	41.27
11/32	8.73	1/2	12.70	1 1/8	28.57	1 5/8	1 5/8	3/16	4.76	3/16	4.76	1 5/8	41.27
11/32	8.73	1/2	12.70	1 1/4	31.75	1 5/8	1 5/8	3/16	4.76	3/16	4.76	1 5/8	41.27
11/32	8.73	1/2	12.70	1 3/8	34.92	1 5/8	1 5/8	3/16	4.76	3/16	4.76	1 5/8	41.27
3/8	9.52	1/2	12.70	21/32	16.67	1 5/8	1 5/8	3/16	4.76	3/16	4.76	1 5/8	41.27
3/8	9.52	1/2	12.70	11/16	17.46	1 5/8	1 5/8	3/16	4.76	3/16	4.76	1 5/8	41.27
3/8	9.52	1/2	12.70	23/32	18.26	1 5/8	1 5/8	3/16	4.76	3/16	4.76	1 5/8	41.27
3/8	9.52	1/2	12.70	3/4	19.05	1 5/8	1 5/8	3/16	4.76	3/16	4.76	1 5/8	41.27
3/8	9.52	1/2	12.70	25/32	19.84	1 5/8	1 5/8	3/16	4.76	3/16	4.76	1 5/8	41.27
3/8	9.52	1/2	12.70	13/16	20.64	1 5/8	1 5/8	3/16	4.76	3/16	4.76	1 5/8	41.27
3/8	9.52	1/2	12.70	27/32	21.43	1 5/8	1 5/8	3/16	4.76	3/16	4.76	1 5/8	41.27
3/8	9.52	1/2	12.70	7/8	22.22	1 5/8	1 5/8	3/16	4.76	3/16	4.76	1 5/8	41.27
3/8	9.52	1/2	12.70	29/32	23.02	1 5/8	1 5/8	3/16	4.76	3/16	4.76	1 5/8	41.27
3/8	9.52	1/2	12.70	15/16	23.81	1 5/8	1 5/8	3/16	4.76	3/16	4.76	1 5/8	41.27
3/8	9.52	1/2	12.70	31/32	24.61	1 5/8	1 5/8	3/16	4.76	3/16	4.76	1 5/8	41.27
3/8	9.52	1/2	12.70	1	25.40	1 5/8	1 5/8	3/16	4.76	3/16	4.76	1 5/8	41.27
3/8	9.52	1/2	12.70	1 1/8	28.57	1 5/8	1 5/8	3/16	4.76	3/16	4.76	1 5/8	41.27
3/8	9.52	1/2	12.70	1 1/4	31.75	1 5/8	1 5/8	3/16	4.76	3/16	4.76	1 5/8	41.27
3/8	9.52	1/2	12.70	1 3/8	34.92	1 5/8	1 5/8	3/16	4.76	3/16	4.76	1 5/8	41.27
13/32	10.32	1/2	12.70	21/32	16.67	1 5/8	1 5/8	3/16	4.76	3/16	4.76	1 5/8	41.27
13/32	10.32	1/2	12.70	11/16	17.46	1 5/8	1 5/8	3/16	4.76	3/16	4.76	1 5/8	41.27
13/32	10.32	1/2	12.70	23/32	18.26	1 5/8	1 5/8	3/16	4.76	3/16	4.76	1 5/8	41.27
13/32	10.32	1/2	12.70	3/4	19.05	1 5/8	1 5/8	3/16	4.76	3/16	4.76	1 5/8	41.27
13/32	10.32	1/2	12.70	25/32	19.84	1 5/8	1 5/8	3/16	4.76	3/16	4.76	1 5/8	41.27
13/32	10.32	1/2	12.70	13/16	20.64	1 5/8	1 5/8	3/16	4.76	3/16	4.76	1 5/8	41.27
13/32	10.32	1/2	12.70	27/32	21.43	1 5/8	1 5/8	3/16	4.76	3/16	4.76	1 5/8	41.27
13/32	10.32	1/2	12.70	7/8	22.22	1 5/8	1 5/8	3/16	4.76	3/16	4.76	1 5/8	41.27
13/32	10.32	1/2	12.70	29/32	23.02	1 5/8	1 5/8	3/16	4.76	3/16	4.76	1 5/8	41.27
13/32	10.32	1/2	12.70	15/16	23.81	1 5/8	1 5/8	3/16	4.76	3/16	4.76	1 5/8	41.27
13/32	10.32	1/2	12.70	31/32	24.61	1 5/8	1 5/8	3/16	4.76	3/16	4.76	1 5/8	41.27
13/32	10.32	1/2	12.70	1	25.40	1 5/8	1 5/8	3/16	4.76	3/16	4.76	1 5/8	41.27
13/32	10.32	1/2	12.70	1 1/8	28.57	1 5/8	1 5/8	3/16	4.76	3/16	4.76	1 5/8	41.27
13/32	10.32	1/2	12.70	1 1/4	31.75	1 5/8	1 5/8	3/16	4.76	3/16	4.76	1 5/8	41.27
13/32	10.32	1/2	12.70	1 3/8	34.92	1 5/8	1 5/8	3/16	4.76	3/16	4.76	1 5/8	41.27
7/16	11.11	1/2	12.70	21/32	16.67	1 5/8	1 5/8	3/16	4.76	3/16	4.76	1 5/8	41.27
7/16	11.11	1/2	12.70	11/16	17.46	1 5/8	1 5/8	3/16	4.76	3/16	4.76	1 5/8	41.27
7/16	11.11	1/2	12.70	23/32	18.26	1 5/8	1 5/8	3/16	4.76	3/16	4.76	1 5/8	41.27
7/16	11.11	1/2	12.70	3/4	19.05	1 5/8	1 5/8	3/16	4.76	3/16	4.76	1 5/8	41.27
7/16	11.11	1/2	12.70	25/32	19.84	1 5/8	1 5/8	3/16	4.76	3/16	4.76	1 5/8	41.27
7/16	11.11	1/2	12.70	13/16	20.64	1 5/8	1 5/8	3/16	4.76	3/16	4.76	1 5/8	41.27
7/16	11.11	1/2	12.70	27/32	21.43	1 5/8	1 5/8	3/16	4.76	3/16	4.76	1 5/8	41.27
7/16	11.11	1/2	12.70	7/8	22.22	1 5/8	1 5/8	3/16	4.76	3/16	4.76	1 5/8	41.27
7/16	11.11	1/2	12.70	29/32	23.02	1 5/8	1 5/8	3/16	4.76	3/16	4.76	1 5/8	41.27
7/16	11.11	1/2	12.70	15/16	23.81	1 5/8	1 5/8	3/16	4.76	3/16	4.76	1 5/8	41.27
7/16	11.11	1/2	12.70	31/32	24.61	1 5/8	1 5/8	3/16	4.76	3/16	4.76	1 5/8	41.27

www.globaltungsten.com

B		E		D		M	A	L		T		C	
inch	mm	inch	mm	inch	mm	inch	inch	inch	mm	inch	mm	inch	mm
7/16	11.11	1/2	12.70	1	25.40	1 5/8	1 5/8	3/16	4.76	3/16	4.76	1 5/8	41.27
7/16	11.11	1/2	12.70	1 1/8	28.57	1 5/8	1 5/8	3/16	4.76	3/16	4.76	1 5/8	41.27
7/16	11.11	1/2	12.70	1 1/4	31.75	1 5/8	1 5/8	3/16	4.76	3/16	4.76	1 5/8	41.27
7/16	11.11	1/2	12.70	1 3/8	34.92	1 5/8	1 5/8	3/16	4.76	3/16	4.76	1 5/8	41.27
15/32	11.91	1/2	12.70	21/32	16.67	1 5/8	1 5/8	3/16	4.76	3/16	4.76	1 5/8	41.27
15/32	11.91	1/2	12.70	11/16	17.46	1 5/8	1 5/8	3/16	4.76	3/16	4.76	1 5/8	41.27
15/32	11.91	1/2	12.70	23/32	18.26	1 5/8	1 5/8	3/16	4.76	3/16	4.76	1 5/8	41.27
15/32	11.91	1/2	12.70	3/4	19.05	1 5/8	1 5/8	3/16	4.76	3/16	4.76	1 5/8	41.27
15/32	11.91	1/2	12.70	25/32	19.84	1 5/8	1 5/8	3/16	4.76	3/16	4.76	1 5/8	41.27
15/32	11.91	1/2	12.70	13/16	20.64	1 5/8	1 5/8	3/16	4.76	3/16	4.76	1 5/8	41.27
15/32	11.91	1/2	12.70	27/32	21.43	1 5/8	1 5/8	3/16	4.76	3/16	4.76	1 5/8	41.27
15/32	11.91	1/2	12.70	7/8	22.22	1 5/8	1 5/8	3/16	4.76	3/16	4.76	1 5/8	41.27
15/32	11.91	1/2	12.70	29/32	23.02	1 5/8	1 5/8	3/16	4.76	3/16	4.76	1 5/8	41.27
15/32	11.91	1/2	12.70	15/16	23.81	1 5/8	1 5/8	3/16	4.76	3/16	4.76	1 5/8	41.27
15/32	11.91	1/2	12.70	31/32	24.61	1 5/8	1 5/8	3/16	4.76	3/16	4.76	1 5/8	41.27
15/32	11.91	1/2	12.70	1	25.40	1 5/8	1 5/8	3/16	4.76	3/16	4.76	1 5/8	41.27
15/32	11.91	1/2	12.70	1 1/8	28.57	1 5/8	1 5/8	3/16	4.76	3/16	4.76	1 5/8	41.27
15/32	11.91	1/2	12.70	1 1/4	31.75	1 5/8	1 5/8	3/16	4.76	3/16	4.76	1 5/8	41.27
15/32	11.91	1/2	12.70	1 3/8	34.92	1 5/8	1 5/8	3/16	4.76	3/16	4.76	1 5/8	41.27
1/2	12.70	1/2	12.70	21/32	16.67	1 5/8	1 5/8	3/16	4.76	3/16	4.76	1 5/8	41.27
1/2	12.70	1/2	12.70	11/16	17.46	1 5/8	1 5/8	3/16	4.76	3/16	4.76	1 5/8	41.27
1/2	12.70	1/2	12.70	23/32	18.26	1 5/8	1 5/8	3/16	4.76	3/16	4.76	1 5/8	41.27
1/2	12.70	1/2	12.70	3/4	19.05	1 5/8	1 5/8	3/16	4.76	3/16	4.76	1 5/8	41.27
1/2	12.70	1/2	12.70	25/32	19.84	1 5/8	1 5/8	3/16	4.76	3/16	4.76	1 5/8	41.27
1/2	12.70	1/2	12.70	13/16	20.64	1 5/8	1 5/8	3/16	4.76	3/16	4.76	1 5/8	41.27
1/2	12.70	1/2	12.70	27/32	21.43	1 5/8	1 5/8	3/16	4.76	3/16	4.76	1 5/8	41.27
1/2	12.70	1/2	12.70	7/8	22.22	1 5/8	1 5/8	3/16	4.76	3/16	4.76	1 5/8	41.27
1/2	12.70	1/2	12.70	29/32	23.02	1 5/8	1 5/8	3/16	4.76	3/16	4.76	1 5/8	41.27
1/2	12.70	1/2	12.70	15/16	23.81	1 5/8	1 5/8	3/16	4.76	3/16	4.76	1 5/8	41.27
1/2	12.70	1/2	12.70	31/32	24.61	1 5/8	1 5/8	3/16	4.76	3/16	4.76	1 5/8	41.27
1/2	12.70	1/2	12.70	1	25.40	1 5/8	1 5/8	3/16	4.76	3/16	4.76	1 5/8	41.27
1/2	12.70	1/2	12.70	1 1/8	28.57	1 5/8	1 5/8	3/16	4.76	3/16	4.76	1 5/8	41.27
1/2	12.70	1/2	12.70	1 1/4	31.75	1 5/8	1 5/8	3/16	4.76	3/16	4.76	1 5/8	41.27
1/2	12.70	1/2	12.70	1 3/8	34.92	1 5/8	1 5/8	3/16	4.76	3/16	4.76	1 5/8	41.27
3/16	4.76	3/8	9.52	19/32	15.08	1 5/8	1 5/8	3/16	4.76	3/16	4.76	1 5/8	41.27
3/16	4.76	3/8	9.52	5/8	15.87	1 5/8	1 5/8	3/16	4.76	3/16	4.76	1 5/8	41.27
3/16	4.76	3/8	9.52	21/32	16.67	1 5/8	1 5/8	3/16	4.76	3/16	4.76	1 5/8	41.27
3/16	4.76	3/8	9.52	11/16	17.46	1 5/8	1 5/8	3/16	4.76	3/16	4.76	1 5/8	41.27
3/16	4.76	3/8	9.52	23/32	18.26	1 5/8	1 5/8	3/16	4.76	3/16	4.76	1 5/8	41.27
3/16	4.76	3/8	9.52	3/4	19.05	1 5/8	1 5/8	3/16	4.76	3/16	4.76	1 5/8	41.27
3/16	4.76	3/8	9.52	25/32	19.84	1 5/8	1 5/8	3/16	4.76	3/16	4.76	1 5/8	41.27
3/16	4.76	3/8	9.52	13/16	20.64	1 5/8	1 5/8	3/16	4.76	3/16	4.76	1 5/8	41.27
3/16	4.76	3/8	9.52	27/32	21.43	1 5/8	1 5/8	3/16	4.76	3/16	4.76	1 5/8	41.27
3/16	4.76	3/8	9.52	7/8	22.22	1 5/8	1 5/8	3/16	4.76	3/16	4.76	1 5/8	41.27
3/16	4.76	3/8	9.52	29/32	23.02	1 5/8	1 5/8	3/16	4.76	3/16	4.76	1 5/8	41.27

www.globaltungsteks.com

B		E		D		M	A	L		T		C	
inch	mm	inch	mm	inch	mm	inch	inch	inch	mm	inch	mm	inch	mm
3/16	4.76	3/8	9.52	15/16	23.81	1 5/8	1 5/8	3/16	4.76	3/16	4.76	1 5/8	41.27
3/16	4.76	3/8	9.52	31/32	24.61	1 5/8	1 5/8	3/16	4.76	3/16	4.76	1 5/8	41.27
3/16	4.76	3/8	9.52	1	25.40	1 5/8	1 5/8	3/16	4.76	3/16	4.76	1 5/8	41.27
3/16	4.76	3/8	9.52	1 1/8	28.57	1 5/8	1 5/8	3/16	4.76	3/16	4.76	1 5/8	41.27
3/16	4.76	3/8	9.52	1 1/4	31.75	1 5/8	1 5/8	3/16	4.76	3/16	4.76	1 5/8	41.27
3/16	4.76	3/8	9.52	1 3/8	34.92	1 5/8	1 5/8	3/16	4.76	3/16	4.76	1 5/8	41.27
7/32	5.56	3/8	9.52	19/32	15.08	1 5/8	1 5/8	3/16	4.76	3/16	4.76	1 5/8	41.27
7/32	5.56	3/8	9.52	5/8	15.87	1 5/8	1 5/8	3/16	4.76	3/16	4.76	1 5/8	41.27
7/32	5.56	3/8	9.52	21/32	16.67	1 5/8	1 5/8	3/16	4.76	3/16	4.76	1 5/8	41.27
7/32	5.56	3/8	9.52	11/16	17.46	1 5/8	1 5/8	3/16	4.76	3/16	4.76	1 5/8	41.27
7/32	5.56	3/8	9.52	23/32	18.26	1 5/8	1 5/8	3/16	4.76	3/16	4.76	1 5/8	41.27
7/32	5.56	3/8	9.52	3/4	19.05	1 5/8	1 5/8	3/16	4.76	3/16	4.76	1 5/8	41.27
7/32	5.56	3/8	9.52	25/32	19.84	1 5/8	1 5/8	3/16	4.76	3/16	4.76	1 5/8	41.27
7/32	5.56	3/8	9.52	13/16	20.64	1 5/8	1 5/8	3/16	4.76	3/16	4.76	1 5/8	41.27
7/32	5.56	3/8	9.52	27/32	21.43	1 5/8	1 5/8	3/16	4.76	3/16	4.76	1 5/8	41.27
7/32	5.56	3/8	9.52	7/8	22.22	1 5/8	1 5/8	3/16	4.76	3/16	4.76	1 5/8	41.27
7/32	5.56	3/8	9.52	29/32	23.02	1 5/8	1 5/8	3/16	4.76	3/16	4.76	1 5/8	41.27
7/32	5.56	3/8	9.52	15/16	23.81	1 5/8	1 5/8	3/16	4.76	3/16	4.76	1 5/8	41.27
7/32	5.56	3/8	9.52	31/32	24.61	1 5/8	1 5/8	3/16	4.76	3/16	4.76	1 5/8	41.27
7/32	5.56	3/8	9.52	1	25.40	1 5/8	1 5/8	3/16	4.76	3/16	4.76	1 5/8	41.27
7/32	5.56	3/8	9.52	1 1/8	28.57	1 5/8	1 5/8	3/16	4.76	3/16	4.76	1 5/8	41.27
7/32	5.56	3/8	9.52	1 1/4	31.75	1 5/8	1 5/8	3/16	4.76	3/16	4.76	1 5/8	41.27
7/32	5.56	3/8	9.52	1 3/8	34.92	1 5/8	1 5/8	3/16	4.76	3/16	4.76	1 5/8	41.27
1/4	6.35	3/8	9.52	19/32	15.08	1 5/8	1 5/8	3/16	4.76	3/16	4.76	1 5/8	41.27
1/4	6.35	3/8	9.52	5/8	15.87	1 5/8	1 5/8	3/16	4.76	3/16	4.76	1 5/8	41.27
1/4	6.35	3/8	9.52	21/32	16.67	1 5/8	1 5/8	3/16	4.76	3/16	4.76	1 5/8	41.27
1/4	6.35	3/8	9.52	11/16	17.46	1 5/8	1 5/8	3/16	4.76	3/16	4.76	1 5/8	41.27
1/4	6.35	3/8	9.52	23/32	18.26	1 5/8	1 5/8	3/16	4.76	3/16	4.76	1 5/8	41.27
1/4	6.35	3/8	9.52	3/4	19.05	1 5/8	1 5/8	3/16	4.76	3/16	4.76	1 5/8	41.27
1/4	6.35	3/8	9.52	25/32	19.84	1 5/8	1 5/8	3/16	4.76	3/16	4.76	1 5/8	41.27
1/4	6.35	3/8	9.52	13/16	20.64	1 5/8	1 5/8	3/16	4.76	3/16	4.76	1 5/8	41.27
1/4	6.35	3/8	9.52	27/32	21.43	1 5/8	1 5/8	3/16	4.76	3/16	4.76	1 5/8	41.27
1/4	6.35	3/8	9.52	7/8	22.22	1 5/8	1 5/8	3/16	4.76	3/16	4.76	1 5/8	41.27
1/4	6.35	3/8	9.52	29/32	23.02	1 5/8	1 5/8	3/16	4.76	3/16	4.76	1 5/8	41.27
1/4	6.35	3/8	9.52	15/16	23.81	1 5/8	1 5/8	3/16	4.76	3/16	4.76	1 5/8	41.27
1/4	6.35	3/8	9.52	31/32	24.61	1 5/8	1 5/8	3/16	4.76	3/16	4.76	1 5/8	41.27
1/4	6.35	3/8	9.52	1	25.40	1 5/8	1 5/8	3/16	4.76	3/16	4.76	1 5/8	41.27
1/4	6.35	3/8	9.52	1 1/8	28.57	1 5/8	1 5/8	3/16	4.76	3/16	4.76	1 5/8	41.27
1/4	6.35	3/8	9.52	1 1/4	31.75	1 5/8	1 5/8	3/16	4.76	3/16	4.76	1 5/8	41.27
1/4	6.35	3/8	9.52	1 3/8	34.92	1 5/8	1 5/8	3/16	4.76	3/16	4.76	1 5/8	41.27
9/32	7.14	3/8	9.52	19/32	15.08	1 5/8	1 5/8	3/16	4.76	3/16	4.76	1 5/8	41.27
9/32	7.14	3/8	9.52	5/8	15.87	1 5/8	1 5/8	3/16	4.76	3/16	4.76	1 5/8	41.27
9/32	7.14	3/8	9.52	21/32	16.67	1 5/8	1 5/8	3/16	4.76	3/16	4.76	1 5/8	41.27
9/32	7.14	3/8	9.52	11/16	17.46	1 5/8	1 5/8	3/16	4.76	3/16	4.76	1 5/8	41.27
9/32	7.14	3/8	9.52	23/32	18.26	1 5/8	1 5/8	3/16	4.76	3/16	4.76	1 5/8	41.27

www.globaltungsteps.com

B		E		D		M	A	L		T		C	
inch	mm	inch	mm	inch	mm	inch	inch	inch	mm	inch	mm	inch	mm
9/32	7.14	3/8	9.52	3/4	19.05	1 5/8	1 5/8	3/16	4.76	3/16	4.76	1 5/8	41.27
9/32	7.14	3/8	9.52	25/32	19.84	1 5/8	1 5/8	3/16	4.76	3/16	4.76	1 5/8	41.27
9/32	7.14	3/8	9.52	13/16	20.64	1 5/8	1 5/8	3/16	4.76	3/16	4.76	1 5/8	41.27
9/32	7.14	3/8	9.52	27/32	21.43	1 5/8	1 5/8	3/16	4.76	3/16	4.76	1 5/8	41.27
9/32	7.14	3/8	9.52	7/8	22.22	1 5/8	1 5/8	3/16	4.76	3/16	4.76	1 5/8	41.27
9/32	7.14	3/8	9.52	29/32	23.02	1 5/8	1 5/8	3/16	4.76	3/16	4.76	1 5/8	41.27
9/32	7.14	3/8	9.52	15/16	23.81	1 5/8	1 5/8	3/16	4.76	3/16	4.76	1 5/8	41.27
9/32	7.14	3/8	9.52	31/32	24.61	1 5/8	1 5/8	3/16	4.76	3/16	4.76	1 5/8	41.27
9/32	7.14	3/8	9.52	1	25.40	1 5/8	1 5/8	3/16	4.76	3/16	4.76	1 5/8	41.27
9/32	7.14	3/8	9.52	1 1/8	28.57	1 5/8	1 5/8	3/16	4.76	3/16	4.76	1 5/8	41.27
9/32	7.14	3/8	9.52	1 1/4	31.75	1 5/8	1 5/8	3/16	4.76	3/16	4.76	1 5/8	41.27
9/32	7.14	3/8	9.52	1 3/8	34.92	1 5/8	1 5/8	3/16	4.76	3/16	4.76	1 5/8	41.27
5/16	7.94	3/8	9.52	19/32	15.08	1 5/8	1 5/8	3/16	4.76	3/16	4.76	1 5/8	41.27
5/16	7.94	3/8	9.52	5/8	15.87	1 5/8	1 5/8	3/16	4.76	3/16	4.76	1 5/8	41.27
5/16	7.94	3/8	9.52	21/32	16.67	1 5/8	1 5/8	3/16	4.76	3/16	4.76	1 5/8	41.27
5/16	7.94	3/8	9.52	11/16	17.46	1 5/8	1 5/8	3/16	4.76	3/16	4.76	1 5/8	41.27
5/16	7.94	3/8	9.52	23/32	18.26	1 5/8	1 5/8	3/16	4.76	3/16	4.76	1 5/8	41.27
5/16	7.94	3/8	9.52	3/4	19.05	1 5/8	1 5/8	3/16	4.76	3/16	4.76	1 5/8	41.27
5/16	7.94	3/8	9.52	25/32	19.84	1 5/8	1 5/8	3/16	4.76	3/16	4.76	1 5/8	41.27
5/16	7.94	3/8	9.52	13/16	20.64	1 5/8	1 5/8	3/16	4.76	3/16	4.76	1 5/8	41.27
5/16	7.94	3/8	9.52	27/32	21.43	1 5/8	1 5/8	3/16	4.76	3/16	4.76	1 5/8	41.27
5/16	7.94	3/8	9.52	7/8	22.22	1 5/8	1 5/8	3/16	4.76	3/16	4.76	1 5/8	41.27
5/16	7.94	3/8	9.52	29/32	23.02	1 5/8	1 5/8	3/16	4.76	3/16	4.76	1 5/8	41.27
5/16	7.94	3/8	9.52	15/16	23.81	1 5/8	1 5/8	3/16	4.76	3/16	4.76	1 5/8	41.27
5/16	7.94	3/8	9.52	31/32	24.61	1 5/8	1 5/8	3/16	4.76	3/16	4.76	1 5/8	41.27
5/16	7.94	3/8	9.52	1	25.40	1 5/8	1 5/8	3/16	4.76	3/16	4.76	1 5/8	41.27
5/16	7.94	3/8	9.52	1 1/8	28.57	1 5/8	1 5/8	3/16	4.76	3/16	4.76	1 5/8	41.27
5/16	7.94	3/8	9.52	1 1/4	31.75	1 5/8	1 5/8	3/16	4.76	3/16	4.76	1 5/8	41.27
5/16	7.94	3/8	9.52	1 3/8	34.92	1 5/8	1 5/8	3/16	4.76	3/16	4.76	1 5/8	41.27
11/32	8.73	3/8	9.52	19/32	15.08	1 5/8	1 5/8	3/16	4.76	3/16	4.76	1 5/8	41.27
11/32	8.73	3/8	9.52	5/8	15.87	1 5/8	1 5/8	3/16	4.76	3/16	4.76	1 5/8	41.27
11/32	8.73	3/8	9.52	21/32	16.67	1 5/8	1 5/8	3/16	4.76	3/16	4.76	1 5/8	41.27
11/32	8.73	3/8	9.52	11/16	17.46	1 5/8	1 5/8	3/16	4.76	3/16	4.76	1 5/8	41.27
11/32	8.73	3/8	9.52	23/32	18.26	1 5/8	1 5/8	3/16	4.76	3/16	4.76	1 5/8	41.27
11/32	8.73	3/8	9.52	3/4	19.05	1 5/8	1 5/8	3/16	4.76	3/16	4.76	1 5/8	41.27
11/32	8.73	3/8	9.52	25/32	19.84	1 5/8	1 5/8	3/16	4.76	3/16	4.76	1 5/8	41.27
11/32	8.73	3/8	9.52	13/16	20.64	1 5/8	1 5/8	3/16	4.76	3/16	4.76	1 5/8	41.27
11/32	8.73	3/8	9.52	27/32	21.43	1 5/8	1 5/8	3/16	4.76	3/16	4.76	1 5/8	41.27
11/32	8.73	3/8	9.52	7/8	22.22	1 5/8	1 5/8	3/16	4.76	3/16	4.76	1 5/8	41.27
11/32	8.73	3/8	9.52	29/32	23.02	1 5/8	1 5/8	3/16	4.76	3/16	4.76	1 5/8	41.27
11/32	8.73	3/8	9.52	15/16	23.81	1 5/8	1 5/8	3/16	4.76	3/16	4.76	1 5/8	41.27
11/32	8.73	3/8	9.52	31/32	24.61	1 5/8	1 5/8	3/16	4.76	3/16	4.76	1 5/8	41.27
11/32	8.73	3/8	9.52	1	25.40	1 5/8	1 5/8	3/16	4.76	3/16	4.76	1 5/8	41.27
11/32	8.73	3/8	9.52	1 1/8	28.57	1 5/8	1 5/8	3/16	4.76	3/16	4.76	1 5/8	41.27
11/32	8.73	3/8	9.52	1 1/4	31.75	1 5/8	1 5/8	3/16	4.76	3/16	4.76	1 5/8	41.27

www.globaltungsten.com

B		E		D		M	A	L		T		C	
inch	mm	inch	mm	inch	mm	inch	inch	inch	mm	inch	mm	inch	mm
11/32	8.73	3/8	9.52	1 3/8	34.92	1 5/8	1 5/8	3/16	4.76	3/16	4.76	1 5/8	41.27
3/8	9.52	3/8	9.52	19/32	15.08	1 5/8	1 5/8	3/16	4.76	3/16	4.76	1 5/8	41.27
3/8	9.52	3/8	9.52	5/8	15.87	1 5/8	1 5/8	3/16	4.76	3/16	4.76	1 5/8	41.27
3/8	9.52	3/8	9.52	21/32	16.67	1 5/8	1 5/8	3/16	4.76	3/16	4.76	1 5/8	41.27
3/8	9.52	3/8	9.52	11/16	17.46	1 5/8	1 5/8	3/16	4.76	3/16	4.76	1 5/8	41.27
3/8	9.52	3/8	9.52	23/32	18.26	1 5/8	1 5/8	3/16	4.76	3/16	4.76	1 5/8	41.27
3/8	9.52	3/8	9.52	3/4	19.05	1 5/8	1 5/8	3/16	4.76	3/16	4.76	1 5/8	41.27
3/8	9.52	3/8	9.52	25/32	19.84	1 5/8	1 5/8	3/16	4.76	3/16	4.76	1 5/8	41.27
3/8	9.52	3/8	9.52	13/16	20.64	1 5/8	1 5/8	3/16	4.76	3/16	4.76	1 5/8	41.27
3/8	9.52	3/8	9.52	27/32	21.43	1 5/8	1 5/8	3/16	4.76	3/16	4.76	1 5/8	41.27
3/8	9.52	3/8	9.52	7/8	22.22	1 5/8	1 5/8	3/16	4.76	3/16	4.76	1 5/8	41.27
3/8	9.52	3/8	9.52	29/32	23.02	1 5/8	1 5/8	3/16	4.76	3/16	4.76	1 5/8	41.27
3/8	9.52	3/8	9.52	15/16	23.81	1 5/8	1 5/8	3/16	4.76	3/16	4.76	1 5/8	41.27
3/8	9.52	3/8	9.52	31/32	24.61	1 5/8	1 5/8	3/16	4.76	3/16	4.76	1 5/8	41.27
3/8	9.52	3/8	9.52	1	25.40	1 5/8	1 5/8	3/16	4.76	3/16	4.76	1 5/8	41.27
3/8	9.52	3/8	9.52	1 1/8	28.57	1 5/8	1 5/8	3/16	4.76	3/16	4.76	1 5/8	41.27
3/8	9.52	3/8	9.52	1 1/4	31.75	1 5/8	1 5/8	3/16	4.76	3/16	4.76	1 5/8	41.27
3/8	9.52	3/8	9.52	1 3/8	34.92	1 5/8	1 5/8	3/16	4.76	3/16	4.76	1 5/8	41.27
3/16	4.76	1	25.40	1 1/4	31.75	1 1/2	1 1/2	3/16	4.76	3/16	4.76	1 1/2	38.10
7/32	5.56	1	25.40	1 1/4	31.75	1 1/2	1 1/2	3/16	4.76	3/16	4.76	1 1/2	38.10
1/4	6.35	1	25.40	1 1/4	31.75	1 1/2	1 1/2	3/16	4.76	3/16	4.76	1 1/2	38.10
9/32	7.14	1	25.40	1 1/4	31.75	1 1/2	1 1/2	3/16	4.76	3/16	4.76	1 1/2	38.10
5/16	7.94	1	25.40	1 1/4	31.75	1 1/2	1 1/2	3/16	4.76	3/16	4.76	1 1/2	38.10
11/32	8.73	1	25.40	1 1/4	31.75	1 1/2	1 1/2	3/16	4.76	3/16	4.76	1 1/2	38.10
3/8	9.52	1	25.40	1 1/4	31.75	1 1/2	1 1/2	3/16	4.76	3/16	4.76	1 1/2	38.10
13/32	10.32	1	25.40	1 1/4	31.75	1 1/2	1 1/2	3/16	4.76	3/16	4.76	1 1/2	38.10
7/16	11.11	1	25.40	1 1/4	31.75	1 1/2	1 1/2	3/16	4.76	3/16	4.76	1 1/2	38.10
15/32	11.91	1	25.40	1 1/4	31.75	1 1/2	1 1/2	3/16	4.76	3/16	4.76	1 1/2	38.10
1/2	12.70	1	25.40	1 1/4	31.75	1 1/2	1 1/2	3/16	4.76	3/16	4.76	1 1/2	38.10
17/32	13.49	1	25.40	1 1/4	31.75	1 1/2	1 1/2	3/16	4.76	3/16	4.76	1 1/2	38.10
9/16	14.29	1	25.40	1 1/4	31.75	1 1/2	1 1/2	3/16	4.76	3/16	4.76	1 1/2	38.10
19/32	15.08	1	25.40	1 1/4	31.75	1 1/2	1 1/2	3/16	4.76	3/16	4.76	1 1/2	38.10
5/8	15.87	1	25.40	1 1/4	31.75	1 1/2	1 1/2	3/16	4.76	3/16	4.76	1 1/2	38.10
21/32	16.67	1	25.40	1 1/4	31.75	1 1/2	1 1/2	3/16	4.76	3/16	4.76	1 1/2	38.10
11/16	17.46	1	25.40	1 1/4	31.75	1 1/2	1 1/2	3/16	4.76	3/16	4.76	1 1/2	38.10
23/32	18.26	1	25.40	1 1/4	31.75	1 1/2	1 1/2	3/16	4.76	3/16	4.76	1 1/2	38.10
3/4	19.05	1	25.40	1 1/4	31.75	1 1/2	1 1/2	3/16	4.76	3/16	4.76	1 1/2	38.10
25/32	19.84	1	25.40	1 1/4	31.75	1 1/2	1 1/2	3/16	4.76	3/16	4.76	1 1/2	38.10
13/16	20.64	1	25.40	1 1/4	31.75	1 1/2	1 1/2	3/16	4.76	3/16	4.76	1 1/2	38.10
27/32	21.43	1	25.40	1 1/4	31.75	1 1/2	1 1/2	3/16	4.76	3/16	4.76	1 1/2	38.10
7/8	22.22	1	25.40	1 1/4	31.75	1 1/2	1 1/2	3/16	4.76	3/16	4.76	1 1/2	38.10
29/32	23.02	1	25.40	1 1/4	31.75	1 1/2	1 1/2	3/16	4.76	3/16	4.76	1 1/2	38.10
15/16	23.81	1	25.40	1 1/4	31.75	1 1/2	1 1/2	3/16	4.76	3/16	4.76	1 1/2	38.10
31/32	24.61	1	25.40	1 1/4	31.75	1 1/2	1 1/2	3/16	4.76	3/16	4.76	1 1/2	38.10
1	25.40	1	25.40	1 1/4	31.75	1 1/2	1 1/2	3/16	4.76	3/16	4.76	1 1/2	38.10

www.globaltungsten.com

B		E		D		M	A	L		T		C	
inch	mm	inch	mm	inch	mm	inch	inch	inch	mm	inch	mm	inch	mm
3/16	4.76	7/8	22.22	1 1/8	28.57	1 1/2	1 1/2	3/16	4.76	3/16	4.76	1 1/2	38.10
7/32	5.56	7/8	22.22	1 1/8	28.57	1 1/2	1 1/2	3/16	4.76	3/16	4.76	1 1/2	38.10
1/4	6.35	7/8	22.22	1 1/8	28.57	1 1/2	1 1/2	3/16	4.76	3/16	4.76	1 1/2	38.10
9/32	7.14	7/8	22.22	1 1/8	28.57	1 1/2	1 1/2	3/16	4.76	3/16	4.76	1 1/2	38.10
5/16	7.94	7/8	22.22	1 1/8	28.57	1 1/2	1 1/2	3/16	4.76	3/16	4.76	1 1/2	38.10
11/32	8.73	7/8	22.22	1 1/8	28.57	1 1/2	1 1/2	3/16	4.76	3/16	4.76	1 1/2	38.10
3/8	9.52	7/8	22.22	1 1/8	28.57	1 1/2	1 1/2	3/16	4.76	3/16	4.76	1 1/2	38.10
13/32	10.32	7/8	22.22	1 1/8	28.57	1 1/2	1 1/2	3/16	4.76	3/16	4.76	1 1/2	38.10
7/16	11.11	7/8	22.22	1 1/8	28.57	1 1/2	1 1/2	3/16	4.76	3/16	4.76	1 1/2	38.10
15/32	11.91	7/8	22.22	1 1/8	28.57	1 1/2	1 1/2	3/16	4.76	3/16	4.76	1 1/2	38.10
1/2	12.70	7/8	22.22	1 1/8	28.57	1 1/2	1 1/2	3/16	4.76	3/16	4.76	1 1/2	38.10
17/32	13.49	7/8	22.22	1 1/8	28.57	1 1/2	1 1/2	3/16	4.76	3/16	4.76	1 1/2	38.10
9/16	14.29	7/8	22.22	1 1/8	28.57	1 1/2	1 1/2	3/16	4.76	3/16	4.76	1 1/2	38.10
19/32	15.08	7/8	22.22	1 1/8	28.57	1 1/2	1 1/2	3/16	4.76	3/16	4.76	1 1/2	38.10
5/8	15.87	7/8	22.22	1 1/8	28.57	1 1/2	1 1/2	3/16	4.76	3/16	4.76	1 1/2	38.10
21/32	16.67	7/8	22.22	1 1/8	28.57	1 1/2	1 1/2	3/16	4.76	3/16	4.76	1 1/2	38.10
11/16	17.46	7/8	22.22	1 1/8	28.57	1 1/2	1 1/2	3/16	4.76	3/16	4.76	1 1/2	38.10
23/32	18.26	7/8	22.22	1 1/8	28.57	1 1/2	1 1/2	3/16	4.76	3/16	4.76	1 1/2	38.10
3/4	19.05	7/8	22.22	1 1/8	28.57	1 1/2	1 1/2	3/16	4.76	3/16	4.76	1 1/2	38.10
25/32	19.84	7/8	22.22	1 1/8	28.57	1 1/2	1 1/2	3/16	4.76	3/16	4.76	1 1/2	38.10
13/16	20.64	7/8	22.22	1 1/8	28.57	1 1/2	1 1/2	3/16	4.76	3/16	4.76	1 1/2	38.10
27/32	21.43	7/8	22.22	1 1/8	28.57	1 1/2	1 1/2	3/16	4.76	3/16	4.76	1 1/2	38.10
7/8	22.22	7/8	22.22	1 1/8	28.57	1 1/2	1 1/2	3/16	4.76	3/16	4.76	1 1/2	38.10
3/16	4.76	7/8	22.22	1 1/4	31.75	1 1/2	1 1/2	3/16	4.76	3/16	4.76	1 1/2	38.10
7/32	5.56	7/8	22.22	1 1/4	31.75	1 1/2	1 1/2	3/16	4.76	3/16	4.76	1 1/2	38.10
1/4	6.35	7/8	22.22	1 1/4	31.75	1 1/2	1 1/2	3/16	4.76	3/16	4.76	1 1/2	38.10
9/32	7.14	7/8	22.22	1 1/4	31.75	1 1/2	1 1/2	3/16	4.76	3/16	4.76	1 1/2	38.10
5/16	7.94	7/8	22.22	1 1/4	31.75	1 1/2	1 1/2	3/16	4.76	3/16	4.76	1 1/2	38.10
11/32	8.73	7/8	22.22	1 1/4	31.75	1 1/2	1 1/2	3/16	4.76	3/16	4.76	1 1/2	38.10
3/8	9.52	7/8	22.22	1 1/4	31.75	1 1/2	1 1/2	3/16	4.76	3/16	4.76	1 1/2	38.10
13/32	10.32	7/8	22.22	1 1/4	31.75	1 1/2	1 1/2	3/16	4.76	3/16	4.76	1 1/2	38.10
7/16	11.11	7/8	22.22	1 1/4	31.75	1 1/2	1 1/2	3/16	4.76	3/16	4.76	1 1/2	38.10
15/32	11.91	7/8	22.22	1 1/4	31.75	1 1/2	1 1/2	3/16	4.76	3/16	4.76	1 1/2	38.10
1/2	12.70	7/8	22.22	1 1/4	31.75	1 1/2	1 1/2	3/16	4.76	3/16	4.76	1 1/2	38.10
17/32	13.49	7/8	22.22	1 1/4	31.75	1 1/2	1 1/2	3/16	4.76	3/16	4.76	1 1/2	38.10
9/16	14.29	7/8	22.22	1 1/4	31.75	1 1/2	1 1/2	3/16	4.76	3/16	4.76	1 1/2	38.10
19/32	15.08	7/8	22.22	1 1/4	31.75	1 1/2	1 1/2	3/16	4.76	3/16	4.76	1 1/2	38.10
5/8	15.87	7/8	22.22	1 1/4	31.75	1 1/2	1 1/2	3/16	4.76	3/16	4.76	1 1/2	38.10
21/32	16.67	7/8	22.22	1 1/4	31.75	1 1/2	1 1/2	3/16	4.76	3/16	4.76	1 1/2	38.10
11/16	17.46	7/8	22.22	1 1/4	31.75	1 1/2	1 1/2	3/16	4.76	3/16	4.76	1 1/2	38.10
23/32	18.26	7/8	22.22	1 1/4	31.75	1 1/2	1 1/2	3/16	4.76	3/16	4.76	1 1/2	38.10
3/4	19.05	7/8	22.22	1 1/4	31.75	1 1/2	1 1/2	3/16	4.76	3/16	4.76	1 1/2	38.10
25/32	19.84	7/8	22.22	1 1/4	31.75	1 1/2	1 1/2	3/16	4.76	3/16	4.76	1 1/2	38.10
13/16	20.64	7/8	22.22	1 1/4	31.75	1 1/2	1 1/2	3/16	4.76	3/16	4.76	1 1/2	38.10
27/32	21.43	7/8	22.22	1 1/4	31.75	1 1/2	1 1/2	3/16	4.76	3/16	4.76	1 1/2	38.10

www.globaltungsten.com

B		E		D		M	A	L		T		C	
inch	mm	inch	mm	inch	mm	inch	inch	inch	mm	inch	mm	inch	mm
7/8	22.22	7/8	22.22	1 1/4	31.75	1 1/2	1 1/2	3/16	4.76	3/16	4.76	1 1/2	38.10
3/16	4.76	3/4	19.05	29/32	23.02	1 1/2	1 1/2	3/16	4.76	3/16	4.76	1 1/2	38.10
7/32	5.56	3/4	19.05	29/32	23.02	1 1/2	1 1/2	3/16	4.76	3/16	4.76	1 1/2	38.10
1/4	6.35	3/4	19.05	29/32	23.02	1 1/2	1 1/2	3/16	4.76	3/16	4.76	1 1/2	38.10
9/32	7.14	3/4	19.05	29/32	23.02	1 1/2	1 1/2	3/16	4.76	3/16	4.76	1 1/2	38.10
5/16	7.94	3/4	19.05	29/32	23.02	1 1/2	1 1/2	3/16	4.76	3/16	4.76	1 1/2	38.10
11/32	8.73	3/4	19.05	29/32	23.02	1 1/2	1 1/2	3/16	4.76	3/16	4.76	1 1/2	38.10
3/8	9.52	3/4	19.05	29/32	23.02	1 1/2	1 1/2	3/16	4.76	3/16	4.76	1 1/2	38.10
13/32	10.32	3/4	19.05	29/32	23.02	1 1/2	1 1/2	3/16	4.76	3/16	4.76	1 1/2	38.10
7/16	11.11	3/4	19.05	29/32	23.02	1 1/2	1 1/2	3/16	4.76	3/16	4.76	1 1/2	38.10
15/32	11.91	3/4	19.05	29/32	23.02	1 1/2	1 1/2	3/16	4.76	3/16	4.76	1 1/2	38.10
1/2	12.70	3/4	19.05	29/32	23.02	1 1/2	1 1/2	3/16	4.76	3/16	4.76	1 1/2	38.10
17/32	13.49	3/4	19.05	29/32	23.02	1 1/2	1 1/2	3/16	4.76	3/16	4.76	1 1/2	38.10
9/16	14.29	3/4	19.05	29/32	23.02	1 1/2	1 1/2	3/16	4.76	3/16	4.76	1 1/2	38.10
19/32	15.08	3/4	19.05	29/32	23.02	1 1/2	1 1/2	3/16	4.76	3/16	4.76	1 1/2	38.10
5/8	15.87	3/4	19.05	29/32	23.02	1 1/2	1 1/2	3/16	4.76	3/16	4.76	1 1/2	38.10
21/32	16.67	3/4	19.05	29/32	23.02	1 1/2	1 1/2	3/16	4.76	3/16	4.76	1 1/2	38.10
11/16	17.46	3/4	19.05	29/32	23.02	1 1/2	1 1/2	3/16	4.76	3/16	4.76	1 1/2	38.10
23/32	18.26	3/4	19.05	29/32	23.02	1 1/2	1 1/2	3/16	4.76	3/16	4.76	1 1/2	38.10
3/4	19.05	3/4	19.05	29/32	23.02	1 1/2	1 1/2	3/16	4.76	3/16	4.76	1 1/2	38.10
3/16	4.76	3/4	19.05	15/16	23.81	1 1/2	1 1/2	3/16	4.76	3/16	4.76	1 1/2	38.10
7/32	5.56	3/4	19.05	15/16	23.81	1 1/2	1 1/2	3/16	4.76	3/16	4.76	1 1/2	38.10
1/4	6.35	3/4	19.05	15/16	23.81	1 1/2	1 1/2	3/16	4.76	3/16	4.76	1 1/2	38.10
9/32	7.14	3/4	19.05	15/16	23.81	1 1/2	1 1/2	3/16	4.76	3/16	4.76	1 1/2	38.10
5/16	7.94	3/4	19.05	15/16	23.81	1 1/2	1 1/2	3/16	4.76	3/16	4.76	1 1/2	38.10
11/32	8.73	3/4	19.05	15/16	23.81	1 1/2	1 1/2	3/16	4.76	3/16	4.76	1 1/2	38.10
3/8	9.52	3/4	19.05	15/16	23.81	1 1/2	1 1/2	3/16	4.76	3/16	4.76	1 1/2	38.10
13/32	10.32	3/4	19.05	15/16	23.81	1 1/2	1 1/2	3/16	4.76	3/16	4.76	1 1/2	38.10
7/16	11.11	3/4	19.05	15/16	23.81	1 1/2	1 1/2	3/16	4.76	3/16	4.76	1 1/2	38.10
15/32	11.91	3/4	19.05	15/16	23.81	1 1/2	1 1/2	3/16	4.76	3/16	4.76	1 1/2	38.10
1/2	12.70	3/4	19.05	15/16	23.81	1 1/2	1 1/2	3/16	4.76	3/16	4.76	1 1/2	38.10
17/32	13.49	3/4	19.05	15/16	23.81	1 1/2	1 1/2	3/16	4.76	3/16	4.76	1 1/2	38.10
9/16	14.29	3/4	19.05	15/16	23.81	1 1/2	1 1/2	3/16	4.76	3/16	4.76	1 1/2	38.10
19/32	15.08	3/4	19.05	15/16	23.81	1 1/2	1 1/2	3/16	4.76	3/16	4.76	1 1/2	38.10
5/8	15.87	3/4	19.05	15/16	23.81	1 1/2	1 1/2	3/16	4.76	3/16	4.76	1 1/2	38.10
21/32	16.67	3/4	19.05	15/16	23.81	1 1/2	1 1/2	3/16	4.76	3/16	4.76	1 1/2	38.10
11/16	17.46	3/4	19.05	15/16	23.81	1 1/2	1 1/2	3/16	4.76	3/16	4.76	1 1/2	38.10
23/32	18.26	3/4	19.05	15/16	23.81	1 1/2	1 1/2	3/16	4.76	3/16	4.76	1 1/2	38.10
3/4	19.05	3/4	19.05	15/16	23.81	1 1/2	1 1/2	3/16	4.76	3/16	4.76	1 1/2	38.10
3/16	4.76	3/4	19.05	31/32	24.61	1 1/2	1 1/2	3/16	4.76	3/16	4.76	1 1/2	38.10
7/32	5.56	3/4	19.05	31/32	24.61	1 1/2	1 1/2	3/16	4.76	3/16	4.76	1 1/2	38.10
1/4	6.35	3/4	19.05	31/32	24.61	1 1/2	1 1/2	3/16	4.76	3/16	4.76	1 1/2	38.10
9/32	7.14	3/4	19.05	31/32	24.61	1 1/2	1 1/2	3/16	4.76	3/16	4.76	1 1/2	38.10
5/16	7.94	3/4	19.05	31/32	24.61	1 1/2	1 1/2	3/16	4.76	3/16	4.76	1 1/2	38.10
11/32	8.73	3/4	19.05	31/32	24.61	1 1/2	1 1/2	3/16	4.76	3/16	4.76	1 1/2	38.10

www.globaltungsteins.com

B		E		D		M	A	L		T		C	
inch	mm	inch	mm	inch	mm	inch	inch	inch	mm	inch	mm	inch	mm
3/8	9.52	3/4	19.05	31/32	24.61	1 1/2	1 1/2	3/16	4.76	3/16	4.76	1 1/2	38.10
13/32	10.32	3/4	19.05	31/32	24.61	1 1/2	1 1/2	3/16	4.76	3/16	4.76	1 1/2	38.10
7/16	11.11	3/4	19.05	31/32	24.61	1 1/2	1 1/2	3/16	4.76	3/16	4.76	1 1/2	38.10
15/32	11.91	3/4	19.05	31/32	24.61	1 1/2	1 1/2	3/16	4.76	3/16	4.76	1 1/2	38.10
1/2	12.70	3/4	19.05	31/32	24.61	1 1/2	1 1/2	3/16	4.76	3/16	4.76	1 1/2	38.10
17/32	13.49	3/4	19.05	31/32	24.61	1 1/2	1 1/2	3/16	4.76	3/16	4.76	1 1/2	38.10
9/16	14.29	3/4	19.05	31/32	24.61	1 1/2	1 1/2	3/16	4.76	3/16	4.76	1 1/2	38.10
19/32	15.08	3/4	19.05	31/32	24.61	1 1/2	1 1/2	3/16	4.76	3/16	4.76	1 1/2	38.10
5/8	15.87	3/4	19.05	31/32	24.61	1 1/2	1 1/2	3/16	4.76	3/16	4.76	1 1/2	38.10
21/32	16.67	3/4	19.05	31/32	24.61	1 1/2	1 1/2	3/16	4.76	3/16	4.76	1 1/2	38.10
11/16	17.46	3/4	19.05	31/32	24.61	1 1/2	1 1/2	3/16	4.76	3/16	4.76	1 1/2	38.10
23/32	18.26	3/4	19.05	31/32	24.61	1 1/2	1 1/2	3/16	4.76	3/16	4.76	1 1/2	38.10
3/4	19.05	3/4	19.05	31/32	24.61	1 1/2	1 1/2	3/16	4.76	3/16	4.76	1 1/2	38.10
3/16	4.76	3/4	19.05	1	25.40	1 1/2	1 1/2	3/16	4.76	3/16	4.76	1 1/2	38.10
7/32	5.56	3/4	19.05	1	25.40	1 1/2	1 1/2	3/16	4.76	3/16	4.76	1 1/2	38.10
1/4	6.35	3/4	19.05	1	25.40	1 1/2	1 1/2	3/16	4.76	3/16	4.76	1 1/2	38.10
9/32	7.14	3/4	19.05	1	25.40	1 1/2	1 1/2	3/16	4.76	3/16	4.76	1 1/2	38.10
5/16	7.94	3/4	19.05	1	25.40	1 1/2	1 1/2	3/16	4.76	3/16	4.76	1 1/2	38.10
11/32	8.73	3/4	19.05	1	25.40	1 1/2	1 1/2	3/16	4.76	3/16	4.76	1 1/2	38.10
3/8	9.52	3/4	19.05	1	25.40	1 1/2	1 1/2	3/16	4.76	3/16	4.76	1 1/2	38.10
13/32	10.32	3/4	19.05	1	25.40	1 1/2	1 1/2	3/16	4.76	3/16	4.76	1 1/2	38.10
7/16	11.11	3/4	19.05	1	25.40	1 1/2	1 1/2	3/16	4.76	3/16	4.76	1 1/2	38.10
15/32	11.91	3/4	19.05	1	25.40	1 1/2	1 1/2	3/16	4.76	3/16	4.76	1 1/2	38.10
1/2	12.70	3/4	19.05	1	25.40	1 1/2	1 1/2	3/16	4.76	3/16	4.76	1 1/2	38.10
17/32	13.49	3/4	19.05	1	25.40	1 1/2	1 1/2	3/16	4.76	3/16	4.76	1 1/2	38.10
9/16	14.29	3/4	19.05	1	25.40	1 1/2	1 1/2	3/16	4.76	3/16	4.76	1 1/2	38.10
19/32	15.08	3/4	19.05	1	25.40	1 1/2	1 1/2	3/16	4.76	3/16	4.76	1 1/2	38.10
5/8	15.87	3/4	19.05	1	25.40	1 1/2	1 1/2	3/16	4.76	3/16	4.76	1 1/2	38.10
21/32	16.67	3/4	19.05	1	25.40	1 1/2	1 1/2	3/16	4.76	3/16	4.76	1 1/2	38.10
11/16	17.46	3/4	19.05	1	25.40	1 1/2	1 1/2	3/16	4.76	3/16	4.76	1 1/2	38.10
23/32	18.26	3/4	19.05	1	25.40	1 1/2	1 1/2	3/16	4.76	3/16	4.76	1 1/2	38.10
3/4	19.05	3/4	19.05	1	25.40	1 1/2	1 1/2	3/16	4.76	3/16	4.76	1 1/2	38.10
3/16	4.76	3/4	19.05	1 1/8	28.57	1 1/2	1 1/2	3/16	4.76	3/16	4.76	1 1/2	38.10
7/32	5.56	3/4	19.05	1 1/8	28.57	1 1/2	1 1/2	3/16	4.76	3/16	4.76	1 1/2	38.10
1/4	6.35	3/4	19.05	1 1/8	28.57	1 1/2	1 1/2	3/16	4.76	3/16	4.76	1 1/2	38.10
9/32	7.14	3/4	19.05	1 1/8	28.57	1 1/2	1 1/2	3/16	4.76	3/16	4.76	1 1/2	38.10
5/16	7.94	3/4	19.05	1 1/8	28.57	1 1/2	1 1/2	3/16	4.76	3/16	4.76	1 1/2	38.10
11/32	8.73	3/4	19.05	1 1/8	28.57	1 1/2	1 1/2	3/16	4.76	3/16	4.76	1 1/2	38.10
3/8	9.52	3/4	19.05	1 1/8	28.57	1 1/2	1 1/2	3/16	4.76	3/16	4.76	1 1/2	38.10
13/32	10.32	3/4	19.05	1 1/8	28.57	1 1/2	1 1/2	3/16	4.76	3/16	4.76	1 1/2	38.10
7/16	11.11	3/4	19.05	1 1/8	28.57	1 1/2	1 1/2	3/16	4.76	3/16	4.76	1 1/2	38.10
15/32	11.91	3/4	19.05	1 1/8	28.57	1 1/2	1 1/2	3/16	4.76	3/16	4.76	1 1/2	38.10
1/2	12.70	3/4	19.05	1 1/8	28.57	1 1/2	1 1/2	3/16	4.76	3/16	4.76	1 1/2	38.10
17/32	13.49	3/4	19.05	1 1/8	28.57	1 1/2	1 1/2	3/16	4.76	3/16	4.76	1 1/2	38.10
9/16	14.29	3/4	19.05	1 1/8	28.57	1 1/2	1 1/2	3/16	4.76	3/16	4.76	1 1/2	38.10

www.globaltungsteins.com

B		E		D		M	A	L		T		C	
inch	mm	inch	mm	inch	mm	inch	inch	inch	mm	inch	mm	inch	mm
19/32	15.08	3/4	19.05	1 1/8	28.57	1 1/2	1 1/2	3/16	4.76	3/16	4.76	1 1/2	38.10
5/8	15.87	3/4	19.05	1 1/8	28.57	1 1/2	1 1/2	3/16	4.76	3/16	4.76	1 1/2	38.10
21/32	16.67	3/4	19.05	1 1/8	28.57	1 1/2	1 1/2	3/16	4.76	3/16	4.76	1 1/2	38.10
11/16	17.46	3/4	19.05	1 1/8	28.57	1 1/2	1 1/2	3/16	4.76	3/16	4.76	1 1/2	38.10
23/32	18.26	3/4	19.05	1 1/8	28.57	1 1/2	1 1/2	3/16	4.76	3/16	4.76	1 1/2	38.10
3/4	19.05	3/4	19.05	1 1/8	28.57	1 1/2	1 1/2	3/16	4.76	3/16	4.76	1 1/2	38.10
3/16	4.76	3/4	19.05	1 1/4	31.75	1 1/2	1 1/2	3/16	4.76	3/16	4.76	1 1/2	38.10
7/32	5.56	3/4	19.05	1 1/4	31.75	1 1/2	1 1/2	3/16	4.76	3/16	4.76	1 1/2	38.10
1/4	6.35	3/4	19.05	1 1/4	31.75	1 1/2	1 1/2	3/16	4.76	3/16	4.76	1 1/2	38.10
9/32	7.14	3/4	19.05	1 1/4	31.75	1 1/2	1 1/2	3/16	4.76	3/16	4.76	1 1/2	38.10
5/16	7.94	3/4	19.05	1 1/4	31.75	1 1/2	1 1/2	3/16	4.76	3/16	4.76	1 1/2	38.10
11/32	8.73	3/4	19.05	1 1/4	31.75	1 1/2	1 1/2	3/16	4.76	3/16	4.76	1 1/2	38.10
3/8	9.52	3/4	19.05	1 1/4	31.75	1 1/2	1 1/2	3/16	4.76	3/16	4.76	1 1/2	38.10
13/32	10.32	3/4	19.05	1 1/4	31.75	1 1/2	1 1/2	3/16	4.76	3/16	4.76	1 1/2	38.10
7/16	11.11	3/4	19.05	1 1/4	31.75	1 1/2	1 1/2	3/16	4.76	3/16	4.76	1 1/2	38.10
15/32	11.91	3/4	19.05	1 1/4	31.75	1 1/2	1 1/2	3/16	4.76	3/16	4.76	1 1/2	38.10
1/2	12.70	3/4	19.05	1 1/4	31.75	1 1/2	1 1/2	3/16	4.76	3/16	4.76	1 1/2	38.10
17/32	13.49	3/4	19.05	1 1/4	31.75	1 1/2	1 1/2	3/16	4.76	3/16	4.76	1 1/2	38.10
9/16	14.29	3/4	19.05	1 1/4	31.75	1 1/2	1 1/2	3/16	4.76	3/16	4.76	1 1/2	38.10
19/32	15.08	3/4	19.05	1 1/4	31.75	1 1/2	1 1/2	3/16	4.76	3/16	4.76	1 1/2	38.10
5/8	15.87	3/4	19.05	1 1/4	31.75	1 1/2	1 1/2	3/16	4.76	3/16	4.76	1 1/2	38.10
21/32	16.67	3/4	19.05	1 1/4	31.75	1 1/2	1 1/2	3/16	4.76	3/16	4.76	1 1/2	38.10
11/16	17.46	3/4	19.05	1 1/4	31.75	1 1/2	1 1/2	3/16	4.76	3/16	4.76	1 1/2	38.10
23/32	18.26	3/4	19.05	1 1/4	31.75	1 1/2	1 1/2	3/16	4.76	3/16	4.76	1 1/2	38.10
3/4	19.05	3/4	19.05	1 1/4	31.75	1 1/2	1 1/2	3/16	4.76	3/16	4.76	1 1/2	38.10
3/16	4.76	5/8	15.87	25/32	19.84	1 1/2	1 1/2	3/16	4.76	3/16	4.76	1 1/2	38.10
3/16	4.76	5/8	15.87	13/16	20.64	1 1/2	1 1/2	3/16	4.76	3/16	4.76	1 1/2	38.10
3/16	4.76	5/8	15.87	27/32	21.43	1 1/2	1 1/2	3/16	4.76	3/16	4.76	1 1/2	38.10
3/16	4.76	5/8	15.87	7/8	22.22	1 1/2	1 1/2	3/16	4.76	3/16	4.76	1 1/2	38.10
3/16	4.76	5/8	15.87	29/32	23.02	1 1/2	1 1/2	3/16	4.76	3/16	4.76	1 1/2	38.10
3/16	4.76	5/8	15.87	15/16	23.81	1 1/2	1 1/2	3/16	4.76	3/16	4.76	1 1/2	38.10
3/16	4.76	5/8	15.87	31/32	24.61	1 1/2	1 1/2	3/16	4.76	3/16	4.76	1 1/2	38.10
3/16	4.76	5/8	15.87	1	25.40	1 1/2	1 1/2	3/16	4.76	3/16	4.76	1 1/2	38.10
3/16	4.76	5/8	15.87	1 1/8	28.57	1 1/2	1 1/2	3/16	4.76	3/16	4.76	1 1/2	38.10
3/16	4.76	5/8	15.87	1 1/4	31.75	1 1/2	1 1/2	3/16	4.76	3/16	4.76	1 1/2	38.10
7/32	5.56	5/8	15.87	25/32	19.84	1 1/2	1 1/2	3/16	4.76	3/16	4.76	1 1/2	38.10
7/32	5.56	5/8	15.87	13/16	20.64	1 1/2	1 1/2	3/16	4.76	3/16	4.76	1 1/2	38.10
7/32	5.56	5/8	15.87	27/32	21.43	1 1/2	1 1/2	3/16	4.76	3/16	4.76	1 1/2	38.10
7/32	5.56	5/8	15.87	7/8	22.22	1 1/2	1 1/2	3/16	4.76	3/16	4.76	1 1/2	38.10
7/32	5.56	5/8	15.87	29/32	23.02	1 1/2	1 1/2	3/16	4.76	3/16	4.76	1 1/2	38.10
7/32	5.56	5/8	15.87	15/16	23.81	1 1/2	1 1/2	3/16	4.76	3/16	4.76	1 1/2	38.10
7/32	5.56	5/8	15.87	31/32	24.61	1 1/2	1 1/2	3/16	4.76	3/16	4.76	1 1/2	38.10
7/32	5.56	5/8	15.87	1	25.40	1 1/2	1 1/2	3/16	4.76	3/16	4.76	1 1/2	38.10
7/32	5.56	5/8	15.87	1 1/8	28.57	1 1/2	1 1/2	3/16	4.76	3/16	4.76	1 1/2	38.10
7/32	5.56	5/8	15.87	1 1/4	31.75	1 1/2	1 1/2	3/16	4.76	3/16	4.76	1 1/2	38.10

www.globaltungsten.com

B		E		D		M	A	L		T		C	
inch	mm	inch	mm	inch	mm	inch	inch	inch	mm	inch	mm	inch	mm
1/4	6.35	5/8	15.87	25/32	19.84	1 1/2	1 1/2	3/16	4.76	3/16	4.76	1 1/2	38.10
1/4	6.35	5/8	15.87	13/16	20.64	1 1/2	1 1/2	3/16	4.76	3/16	4.76	1 1/2	38.10
1/4	6.35	5/8	15.87	27/32	21.43	1 1/2	1 1/2	3/16	4.76	3/16	4.76	1 1/2	38.10
1/4	6.35	5/8	15.87	7/8	22.22	1 1/2	1 1/2	3/16	4.76	3/16	4.76	1 1/2	38.10
1/4	6.35	5/8	15.87	29/32	23.02	1 1/2	1 1/2	3/16	4.76	3/16	4.76	1 1/2	38.10
1/4	6.35	5/8	15.87	15/16	23.81	1 1/2	1 1/2	3/16	4.76	3/16	4.76	1 1/2	38.10
1/4	6.35	5/8	15.87	31/32	24.61	1 1/2	1 1/2	3/16	4.76	3/16	4.76	1 1/2	38.10
1/4	6.35	5/8	15.87	1	25.40	1 1/2	1 1/2	3/16	4.76	3/16	4.76	1 1/2	38.10
1/4	6.35	5/8	15.87	1 1/8	28.57	1 1/2	1 1/2	3/16	4.76	3/16	4.76	1 1/2	38.10
1/4	6.35	5/8	15.87	1 1/4	31.75	1 1/2	1 1/2	3/16	4.76	3/16	4.76	1 1/2	38.10
9/32	7.14	5/8	15.87	25/32	19.84	1 1/2	1 1/2	3/16	4.76	3/16	4.76	1 1/2	38.10
9/32	7.14	5/8	15.87	13/16	20.64	1 1/2	1 1/2	3/16	4.76	3/16	4.76	1 1/2	38.10
9/32	7.14	5/8	15.87	27/32	21.43	1 1/2	1 1/2	3/16	4.76	3/16	4.76	1 1/2	38.10
9/32	7.14	5/8	15.87	7/8	22.22	1 1/2	1 1/2	3/16	4.76	3/16	4.76	1 1/2	38.10
9/32	7.14	5/8	15.87	29/32	23.02	1 1/2	1 1/2	3/16	4.76	3/16	4.76	1 1/2	38.10
9/32	7.14	5/8	15.87	15/16	23.81	1 1/2	1 1/2	3/16	4.76	3/16	4.76	1 1/2	38.10
9/32	7.14	5/8	15.87	31/32	24.61	1 1/2	1 1/2	3/16	4.76	3/16	4.76	1 1/2	38.10
9/32	7.14	5/8	15.87	1	25.40	1 1/2	1 1/2	3/16	4.76	3/16	4.76	1 1/2	38.10
9/32	7.14	5/8	15.87	1 1/8	28.57	1 1/2	1 1/2	3/16	4.76	3/16	4.76	1 1/2	38.10
9/32	7.14	5/8	15.87	1 1/4	31.75	1 1/2	1 1/2	3/16	4.76	3/16	4.76	1 1/2	38.10
5/16	7.94	5/8	15.87	25/32	19.84	1 1/2	1 1/2	3/16	4.76	3/16	4.76	1 1/2	38.10
5/16	7.94	5/8	15.87	13/16	20.64	1 1/2	1 1/2	3/16	4.76	3/16	4.76	1 1/2	38.10
5/16	7.94	5/8	15.87	27/32	21.43	1 1/2	1 1/2	3/16	4.76	3/16	4.76	1 1/2	38.10
5/16	7.94	5/8	15.87	7/8	22.22	1 1/2	1 1/2	3/16	4.76	3/16	4.76	1 1/2	38.10
5/16	7.94	5/8	15.87	29/32	23.02	1 1/2	1 1/2	3/16	4.76	3/16	4.76	1 1/2	38.10
5/16	7.94	5/8	15.87	15/16	23.81	1 1/2	1 1/2	3/16	4.76	3/16	4.76	1 1/2	38.10
5/16	7.94	5/8	15.87	31/32	24.61	1 1/2	1 1/2	3/16	4.76	3/16	4.76	1 1/2	38.10
5/16	7.94	5/8	15.87	1	25.40	1 1/2	1 1/2	3/16	4.76	3/16	4.76	1 1/2	38.10
5/16	7.94	5/8	15.87	1 1/8	28.57	1 1/2	1 1/2	3/16	4.76	3/16	4.76	1 1/2	38.10
5/16	7.94	5/8	15.87	1 1/4	31.75	1 1/2	1 1/2	3/16	4.76	3/16	4.76	1 1/2	38.10
11/32	8.73	5/8	15.87	25/32	19.84	1 1/2	1 1/2	3/16	4.76	3/16	4.76	1 1/2	38.10
11/32	8.73	5/8	15.87	13/16	20.64	1 1/2	1 1/2	3/16	4.76	3/16	4.76	1 1/2	38.10
11/32	8.73	5/8	15.87	27/32	21.43	1 1/2	1 1/2	3/16	4.76	3/16	4.76	1 1/2	38.10
11/32	8.73	5/8	15.87	7/8	22.22	1 1/2	1 1/2	3/16	4.76	3/16	4.76	1 1/2	38.10
11/32	8.73	5/8	15.87	29/32	23.02	1 1/2	1 1/2	3/16	4.76	3/16	4.76	1 1/2	38.10
11/32	8.73	5/8	15.87	15/16	23.81	1 1/2	1 1/2	3/16	4.76	3/16	4.76	1 1/2	38.10
11/32	8.73	5/8	15.87	31/32	24.61	1 1/2	1 1/2	3/16	4.76	3/16	4.76	1 1/2	38.10
11/32	8.73	5/8	15.87	1	25.40	1 1/2	1 1/2	3/16	4.76	3/16	4.76	1 1/2	38.10
11/32	8.73	5/8	15.87	1 1/8	28.57	1 1/2	1 1/2	3/16	4.76	3/16	4.76	1 1/2	38.10
11/32	8.73	5/8	15.87	1 1/4	31.75	1 1/2	1 1/2	3/16	4.76	3/16	4.76	1 1/2	38.10
3/8	9.52	5/8	15.87	25/32	19.84	1 1/2	1 1/2	3/16	4.76	3/16	4.76	1 1/2	38.10
3/8	9.52	5/8	15.87	13/16	20.64	1 1/2	1 1/2	3/16	4.76	3/16	4.76	1 1/2	38.10
3/8	9.52	5/8	15.87	27/32	21.43	1 1/2	1 1/2	3/16	4.76	3/16	4.76	1 1/2	38.10
3/8	9.52	5/8	15.87	7/8	22.22	1 1/2	1 1/2	3/16	4.76	3/16	4.76	1 1/2	38.10
3/8	9.52	5/8	15.87	29/32	23.02	1 1/2	1 1/2	3/16	4.76	3/16	4.76	1 1/2	38.10

www.globaltungsteels.com

B		E		D		M	A	L		T		C	
inch	mm	inch	mm	inch	mm	inch	inch	inch	mm	inch	mm	inch	mm
3/8	9.52	5/8	15.87	15/16	23.81	1 1/2	1 1/2	3/16	4.76	3/16	4.76	1 1/2	38.10
3/8	9.52	5/8	15.87	31/32	24.61	1 1/2	1 1/2	3/16	4.76	3/16	4.76	1 1/2	38.10
3/8	9.52	5/8	15.87	1	25.40	1 1/2	1 1/2	3/16	4.76	3/16	4.76	1 1/2	38.10
3/8	9.52	5/8	15.87	1 1/8	28.57	1 1/2	1 1/2	3/16	4.76	3/16	4.76	1 1/2	38.10
3/8	9.52	5/8	15.87	1 1/4	31.75	1 1/2	1 1/2	3/16	4.76	3/16	4.76	1 1/2	38.10
13/32	10.32	5/8	15.87	25/32	19.84	1 1/2	1 1/2	3/16	4.76	3/16	4.76	1 1/2	38.10
13/32	10.32	5/8	15.87	13/16	20.64	1 1/2	1 1/2	3/16	4.76	3/16	4.76	1 1/2	38.10
13/32	10.32	5/8	15.87	27/32	21.43	1 1/2	1 1/2	3/16	4.76	3/16	4.76	1 1/2	38.10
13/32	10.32	5/8	15.87	7/8	22.22	1 1/2	1 1/2	3/16	4.76	3/16	4.76	1 1/2	38.10
13/32	10.32	5/8	15.87	29/32	23.02	1 1/2	1 1/2	3/16	4.76	3/16	4.76	1 1/2	38.10
13/32	10.32	5/8	15.87	15/16	23.81	1 1/2	1 1/2	3/16	4.76	3/16	4.76	1 1/2	38.10
13/32	10.32	5/8	15.87	31/32	24.61	1 1/2	1 1/2	3/16	4.76	3/16	4.76	1 1/2	38.10
13/32	10.32	5/8	15.87	1	25.40	1 1/2	1 1/2	3/16	4.76	3/16	4.76	1 1/2	38.10
13/32	10.32	5/8	15.87	1 1/8	28.57	1 1/2	1 1/2	3/16	4.76	3/16	4.76	1 1/2	38.10
13/32	10.32	5/8	15.87	1 1/4	31.75	1 1/2	1 1/2	3/16	4.76	3/16	4.76	1 1/2	38.10
7/16	11.11	5/8	15.87	25/32	19.84	1 1/2	1 1/2	3/16	4.76	3/16	4.76	1 1/2	38.10
7/16	11.11	5/8	15.87	13/16	20.64	1 1/2	1 1/2	3/16	4.76	3/16	4.76	1 1/2	38.10
7/16	11.11	5/8	15.87	27/32	21.43	1 1/2	1 1/2	3/16	4.76	3/16	4.76	1 1/2	38.10
7/16	11.11	5/8	15.87	7/8	22.22	1 1/2	1 1/2	3/16	4.76	3/16	4.76	1 1/2	38.10
7/16	11.11	5/8	15.87	29/32	23.02	1 1/2	1 1/2	3/16	4.76	3/16	4.76	1 1/2	38.10
7/16	11.11	5/8	15.87	15/16	23.81	1 1/2	1 1/2	3/16	4.76	3/16	4.76	1 1/2	38.10
7/16	11.11	5/8	15.87	31/32	24.61	1 1/2	1 1/2	3/16	4.76	3/16	4.76	1 1/2	38.10
7/16	11.11	5/8	15.87	1	25.40	1 1/2	1 1/2	3/16	4.76	3/16	4.76	1 1/2	38.10
7/16	11.11	5/8	15.87	1 1/8	28.57	1 1/2	1 1/2	3/16	4.76	3/16	4.76	1 1/2	38.10
7/16	11.11	5/8	15.87	1 1/4	31.75	1 1/2	1 1/2	3/16	4.76	3/16	4.76	1 1/2	38.10
15/32	11.91	5/8	15.87	25/32	19.84	1 1/2	1 1/2	3/16	4.76	3/16	4.76	1 1/2	38.10
15/32	11.91	5/8	15.87	13/16	20.64	1 1/2	1 1/2	3/16	4.76	3/16	4.76	1 1/2	38.10
15/32	11.91	5/8	15.87	27/32	21.43	1 1/2	1 1/2	3/16	4.76	3/16	4.76	1 1/2	38.10
15/32	11.91	5/8	15.87	7/8	22.22	1 1/2	1 1/2	3/16	4.76	3/16	4.76	1 1/2	38.10
15/32	11.91	5/8	15.87	29/32	23.02	1 1/2	1 1/2	3/16	4.76	3/16	4.76	1 1/2	38.10
15/32	11.91	5/8	15.87	15/16	23.81	1 1/2	1 1/2	3/16	4.76	3/16	4.76	1 1/2	38.10
15/32	11.91	5/8	15.87	31/32	24.61	1 1/2	1 1/2	3/16	4.76	3/16	4.76	1 1/2	38.10
15/32	11.91	5/8	15.87	1	25.40	1 1/2	1 1/2	3/16	4.76	3/16	4.76	1 1/2	38.10
15/32	11.91	5/8	15.87	1 1/8	28.57	1 1/2	1 1/2	3/16	4.76	3/16	4.76	1 1/2	38.10
15/32	11.91	5/8	15.87	1 1/4	31.75	1 1/2	1 1/2	3/16	4.76	3/16	4.76	1 1/2	38.10
1/2	12.70	5/8	15.87	25/32	19.84	1 1/2	1 1/2	3/16	4.76	3/16	4.76	1 1/2	38.10
1/2	12.70	5/8	15.87	13/16	20.64	1 1/2	1 1/2	3/16	4.76	3/16	4.76	1 1/2	38.10
1/2	12.70	5/8	15.87	27/32	21.43	1 1/2	1 1/2	3/16	4.76	3/16	4.76	1 1/2	38.10
1/2	12.70	5/8	15.87	7/8	22.22	1 1/2	1 1/2	3/16	4.76	3/16	4.76	1 1/2	38.10
1/2	12.70	5/8	15.87	29/32	23.02	1 1/2	1 1/2	3/16	4.76	3/16	4.76	1 1/2	38.10
1/2	12.70	5/8	15.87	15/16	23.81	1 1/2	1 1/2	3/16	4.76	3/16	4.76	1 1/2	38.10
1/2	12.70	5/8	15.87	31/32	24.61	1 1/2	1 1/2	3/16	4.76	3/16	4.76	1 1/2	38.10
1/2	12.70	5/8	15.87	1	25.40	1 1/2	1 1/2	3/16	4.76	3/16	4.76	1 1/2	38.10
1/2	12.70	5/8	15.87	1 1/8	28.57	1 1/2	1 1/2	3/16	4.76	3/16	4.76	1 1/2	38.10
1/2	12.70	5/8	15.87	1 1/4	31.75	1 1/2	1 1/2	3/16	4.76	3/16	4.76	1 1/2	38.10

www.globaltungsten.com

B		E		D		M	A	L		T		C	
inch	mm	inch	mm	inch	mm	inch	inch	inch	mm	inch	mm	inch	mm
17/32	13.49	5/8	15.87	25/32	19.84	1 1/2	1 1/2	3/16	4.76	3/16	4.76	1 1/2	38.10
17/32	13.49	5/8	15.87	13/16	20.64	1 1/2	1 1/2	3/16	4.76	3/16	4.76	1 1/2	38.10
17/32	13.49	5/8	15.87	27/32	21.43	1 1/2	1 1/2	3/16	4.76	3/16	4.76	1 1/2	38.10
17/32	13.49	5/8	15.87	7/8	22.22	1 1/2	1 1/2	3/16	4.76	3/16	4.76	1 1/2	38.10
17/32	13.49	5/8	15.87	29/32	23.02	1 1/2	1 1/2	3/16	4.76	3/16	4.76	1 1/2	38.10
17/32	13.49	5/8	15.87	15/16	23.81	1 1/2	1 1/2	3/16	4.76	3/16	4.76	1 1/2	38.10
17/32	13.49	5/8	15.87	31/32	24.61	1 1/2	1 1/2	3/16	4.76	3/16	4.76	1 1/2	38.10
17/32	13.49	5/8	15.87	1	25.40	1 1/2	1 1/2	3/16	4.76	3/16	4.76	1 1/2	38.10
17/32	13.49	5/8	15.87	1 1/8	28.57	1 1/2	1 1/2	3/16	4.76	3/16	4.76	1 1/2	38.10
17/32	13.49	5/8	15.87	1 1/4	31.75	1 1/2	1 1/2	3/16	4.76	3/16	4.76	1 1/2	38.10
9/16	14.29	5/8	15.87	25/32	19.84	1 1/2	1 1/2	3/16	4.76	3/16	4.76	1 1/2	38.10
9/16	14.29	5/8	15.87	13/16	20.64	1 1/2	1 1/2	3/16	4.76	3/16	4.76	1 1/2	38.10
9/16	14.29	5/8	15.87	27/32	21.43	1 1/2	1 1/2	3/16	4.76	3/16	4.76	1 1/2	38.10
9/16	14.29	5/8	15.87	7/8	22.22	1 1/2	1 1/2	3/16	4.76	3/16	4.76	1 1/2	38.10
9/16	14.29	5/8	15.87	29/32	23.02	1 1/2	1 1/2	3/16	4.76	3/16	4.76	1 1/2	38.10
9/16	14.29	5/8	15.87	15/16	23.81	1 1/2	1 1/2	3/16	4.76	3/16	4.76	1 1/2	38.10
9/16	14.29	5/8	15.87	31/32	24.61	1 1/2	1 1/2	3/16	4.76	3/16	4.76	1 1/2	38.10
9/16	14.29	5/8	15.87	1	25.40	1 1/2	1 1/2	3/16	4.76	3/16	4.76	1 1/2	38.10
9/16	14.29	5/8	15.87	1 1/8	28.57	1 1/2	1 1/2	3/16	4.76	3/16	4.76	1 1/2	38.10
9/16	14.29	5/8	15.87	1 1/4	31.75	1 1/2	1 1/2	3/16	4.76	3/16	4.76	1 1/2	38.10
19/32	15.08	5/8	15.87	25/32	19.84	1 1/2	1 1/2	3/16	4.76	3/16	4.76	1 1/2	38.10
19/32	15.08	5/8	15.87	13/16	20.64	1 1/2	1 1/2	3/16	4.76	3/16	4.76	1 1/2	38.10
19/32	15.08	5/8	15.87	27/32	21.43	1 1/2	1 1/2	3/16	4.76	3/16	4.76	1 1/2	38.10
19/32	15.08	5/8	15.87	7/8	22.22	1 1/2	1 1/2	3/16	4.76	3/16	4.76	1 1/2	38.10
19/32	15.08	5/8	15.87	29/32	23.02	1 1/2	1 1/2	3/16	4.76	3/16	4.76	1 1/2	38.10
19/32	15.08	5/8	15.87	15/16	23.81	1 1/2	1 1/2	3/16	4.76	3/16	4.76	1 1/2	38.10
19/32	15.08	5/8	15.87	31/32	24.61	1 1/2	1 1/2	3/16	4.76	3/16	4.76	1 1/2	38.10
19/32	15.08	5/8	15.87	1	25.40	1 1/2	1 1/2	3/16	4.76	3/16	4.76	1 1/2	38.10
19/32	15.08	5/8	15.87	1 1/8	28.57	1 1/2	1 1/2	3/16	4.76	3/16	4.76	1 1/2	38.10
19/32	15.08	5/8	15.87	1 1/4	31.75	1 1/2	1 1/2	3/16	4.76	3/16	4.76	1 1/2	38.10
5/8	15.87	5/8	15.87	25/32	19.84	1 1/2	1 1/2	3/16	4.76	3/16	4.76	1 1/2	38.10
5/8	15.87	5/8	15.87	13/16	20.64	1 1/2	1 1/2	3/16	4.76	3/16	4.76	1 1/2	38.10
5/8	15.87	5/8	15.87	27/32	21.43	1 1/2	1 1/2	3/16	4.76	3/16	4.76	1 1/2	38.10
5/8	15.87	5/8	15.87	7/8	22.22	1 1/2	1 1/2	3/16	4.76	3/16	4.76	1 1/2	38.10
5/8	15.87	5/8	15.87	29/32	23.02	1 1/2	1 1/2	3/16	4.76	3/16	4.76	1 1/2	38.10
5/8	15.87	5/8	15.87	15/16	23.81	1 1/2	1 1/2	3/16	4.76	3/16	4.76	1 1/2	38.10
5/8	15.87	5/8	15.87	31/32	24.61	1 1/2	1 1/2	3/16	4.76	3/16	4.76	1 1/2	38.10
5/8	15.87	5/8	15.87	1	25.40	1 1/2	1 1/2	3/16	4.76	3/16	4.76	1 1/2	38.10
5/8	15.87	5/8	15.87	1 1/8	28.57	1 1/2	1 1/2	3/16	4.76	3/16	4.76	1 1/2	38.10
5/8	15.87	5/8	15.87	1 1/4	31.75	1 1/2	1 1/2	3/16	4.76	3/16	4.76	1 1/2	38.10
3/16	4.76	1/2	12.70	21/32	16.67	1 1/2	1 1/2	3/16	4.76	3/16	4.76	1 1/2	38.10
3/16	4.76	1/2	12.70	11/16	17.46	1 1/2	1 1/2	3/16	4.76	3/16	4.76	1 1/2	38.10
3/16	4.76	1/2	12.70	23/32	18.26	1 1/2	1 1/2	3/16	4.76	3/16	4.76	1 1/2	38.10
3/16	4.76	1/2	12.70	3/4	19.05	1 1/2	1 1/2	3/16	4.76	3/16	4.76	1 1/2	38.10
3/16	4.76	1/2	12.70	25/32	19.84	1 1/2	1 1/2	3/16	4.76	3/16	4.76	1 1/2	38.10

www.globaltungsten.com

B		E		D		M	A	L		T		C	
inch	mm	inch	mm	inch	mm	inch	inch	inch	mm	inch	mm	inch	mm
3/16	4.76	1/2	12.70	13/16	20.64	1 1/2	1 1/2	3/16	4.76	3/16	4.76	1 1/2	38.10
3/16	4.76	1/2	12.70	27/32	21.43	1 1/2	1 1/2	3/16	4.76	3/16	4.76	1 1/2	38.10
3/16	4.76	1/2	12.70	7/8	22.22	1 1/2	1 1/2	3/16	4.76	3/16	4.76	1 1/2	38.10
3/16	4.76	1/2	12.70	29/32	23.02	1 1/2	1 1/2	3/16	4.76	3/16	4.76	1 1/2	38.10
3/16	4.76	1/2	12.70	15/16	23.81	1 1/2	1 1/2	3/16	4.76	3/16	4.76	1 1/2	38.10
3/16	4.76	1/2	12.70	31/32	24.61	1 1/2	1 1/2	3/16	4.76	3/16	4.76	1 1/2	38.10
3/16	4.76	1/2	12.70	1	25.40	1 1/2	1 1/2	3/16	4.76	3/16	4.76	1 1/2	38.10
3/16	4.76	1/2	12.70	1 1/8	28.57	1 1/2	1 1/2	3/16	4.76	3/16	4.76	1 1/2	38.10
3/16	4.76	1/2	12.70	1 1/4	31.75	1 1/2	1 1/2	3/16	4.76	3/16	4.76	1 1/2	38.10
7/32	5.56	1/2	12.70	21/32	16.67	1 1/2	1 1/2	3/16	4.76	3/16	4.76	1 1/2	38.10
7/32	5.56	1/2	12.70	11/16	17.46	1 1/2	1 1/2	3/16	4.76	3/16	4.76	1 1/2	38.10
7/32	5.56	1/2	12.70	23/32	18.26	1 1/2	1 1/2	3/16	4.76	3/16	4.76	1 1/2	38.10
7/32	5.56	1/2	12.70	3/4	19.05	1 1/2	1 1/2	3/16	4.76	3/16	4.76	1 1/2	38.10
7/32	5.56	1/2	12.70	25/32	19.84	1 1/2	1 1/2	3/16	4.76	3/16	4.76	1 1/2	38.10
7/32	5.56	1/2	12.70	13/16	20.64	1 1/2	1 1/2	3/16	4.76	3/16	4.76	1 1/2	38.10
7/32	5.56	1/2	12.70	27/32	21.43	1 1/2	1 1/2	3/16	4.76	3/16	4.76	1 1/2	38.10
7/32	5.56	1/2	12.70	7/8	22.22	1 1/2	1 1/2	3/16	4.76	3/16	4.76	1 1/2	38.10
7/32	5.56	1/2	12.70	29/32	23.02	1 1/2	1 1/2	3/16	4.76	3/16	4.76	1 1/2	38.10
7/32	5.56	1/2	12.70	15/16	23.81	1 1/2	1 1/2	3/16	4.76	3/16	4.76	1 1/2	38.10
7/32	5.56	1/2	12.70	31/32	24.61	1 1/2	1 1/2	3/16	4.76	3/16	4.76	1 1/2	38.10
7/32	5.56	1/2	12.70	1	25.40	1 1/2	1 1/2	3/16	4.76	3/16	4.76	1 1/2	38.10
7/32	5.56	1/2	12.70	1 1/8	28.57	1 1/2	1 1/2	3/16	4.76	3/16	4.76	1 1/2	38.10
7/32	5.56	1/2	12.70	1 1/4	31.75	1 1/2	1 1/2	3/16	4.76	3/16	4.76	1 1/2	38.10
1/4	6.35	1/2	12.70	21/32	16.67	1 1/2	1 1/2	3/16	4.76	3/16	4.76	1 1/2	38.10
1/4	6.35	1/2	12.70	11/16	17.46	1 1/2	1 1/2	3/16	4.76	3/16	4.76	1 1/2	38.10
1/4	6.35	1/2	12.70	23/32	18.26	1 1/2	1 1/2	3/16	4.76	3/16	4.76	1 1/2	38.10
1/4	6.35	1/2	12.70	3/4	19.05	1 1/2	1 1/2	3/16	4.76	3/16	4.76	1 1/2	38.10
1/4	6.35	1/2	12.70	25/32	19.84	1 1/2	1 1/2	3/16	4.76	3/16	4.76	1 1/2	38.10
1/4	6.35	1/2	12.70	13/16	20.64	1 1/2	1 1/2	3/16	4.76	3/16	4.76	1 1/2	38.10
1/4	6.35	1/2	12.70	27/32	21.43	1 1/2	1 1/2	3/16	4.76	3/16	4.76	1 1/2	38.10
1/4	6.35	1/2	12.70	7/8	22.22	1 1/2	1 1/2	3/16	4.76	3/16	4.76	1 1/2	38.10
1/4	6.35	1/2	12.70	29/32	23.02	1 1/2	1 1/2	3/16	4.76	3/16	4.76	1 1/2	38.10
1/4	6.35	1/2	12.70	15/16	23.81	1 1/2	1 1/2	3/16	4.76	3/16	4.76	1 1/2	38.10
1/4	6.35	1/2	12.70	31/32	24.61	1 1/2	1 1/2	3/16	4.76	3/16	4.76	1 1/2	38.10
1/4	6.35	1/2	12.70	1	25.40	1 1/2	1 1/2	3/16	4.76	3/16	4.76	1 1/2	38.10
1/4	6.35	1/2	12.70	1 1/8	28.57	1 1/2	1 1/2	3/16	4.76	3/16	4.76	1 1/2	38.10
1/4	6.35	1/2	12.70	1 1/4	31.75	1 1/2	1 1/2	3/16	4.76	3/16	4.76	1 1/2	38.10
9/32	7.14	1/2	12.70	21/32	16.67	1 1/2	1 1/2	3/16	4.76	3/16	4.76	1 1/2	38.10
9/32	7.14	1/2	12.70	11/16	17.46	1 1/2	1 1/2	3/16	4.76	3/16	4.76	1 1/2	38.10
9/32	7.14	1/2	12.70	23/32	18.26	1 1/2	1 1/2	3/16	4.76	3/16	4.76	1 1/2	38.10
9/32	7.14	1/2	12.70	3/4	19.05	1 1/2	1 1/2	3/16	4.76	3/16	4.76	1 1/2	38.10
9/32	7.14	1/2	12.70	25/32	19.84	1 1/2	1 1/2	3/16	4.76	3/16	4.76	1 1/2	38.10
9/32	7.14	1/2	12.70	13/16	20.64	1 1/2	1 1/2	3/16	4.76	3/16	4.76	1 1/2	38.10
9/32	7.14	1/2	12.70	27/32	21.43	1 1/2	1 1/2	3/16	4.76	3/16	4.76	1 1/2	38.10
9/32	7.14	1/2	12.70	7/8	22.22	1 1/2	1 1/2	3/16	4.76	3/16	4.76	1 1/2	38.10

www.globaltungsten.com

B		E		D		M	A	L		T		C	
inch	mm	inch	mm	inch	mm	inch	inch	inch	mm	inch	mm	inch	mm
9/32	7.14	1/2	12.70	29/32	23.02	1 1/2	1 1/2	3/16	4.76	3/16	4.76	1 1/2	38.10
9/32	7.14	1/2	12.70	15/16	23.81	1 1/2	1 1/2	3/16	4.76	3/16	4.76	1 1/2	38.10
9/32	7.14	1/2	12.70	31/32	24.61	1 1/2	1 1/2	3/16	4.76	3/16	4.76	1 1/2	38.10
9/32	7.14	1/2	12.70	1	25.40	1 1/2	1 1/2	3/16	4.76	3/16	4.76	1 1/2	38.10
9/32	7.14	1/2	12.70	1 1/8	28.57	1 1/2	1 1/2	3/16	4.76	3/16	4.76	1 1/2	38.10
9/32	7.14	1/2	12.70	1 1/4	31.75	1 1/2	1 1/2	3/16	4.76	3/16	4.76	1 1/2	38.10
5/16	7.94	1/2	12.70	21/32	16.67	1 1/2	1 1/2	3/16	4.76	3/16	4.76	1 1/2	38.10
5/16	7.94	1/2	12.70	11/16	17.46	1 1/2	1 1/2	3/16	4.76	3/16	4.76	1 1/2	38.10
5/16	7.94	1/2	12.70	23/32	18.26	1 1/2	1 1/2	3/16	4.76	3/16	4.76	1 1/2	38.10
5/16	7.94	1/2	12.70	3/4	19.05	1 1/2	1 1/2	3/16	4.76	3/16	4.76	1 1/2	38.10
5/16	7.94	1/2	12.70	25/32	19.84	1 1/2	1 1/2	3/16	4.76	3/16	4.76	1 1/2	38.10
5/16	7.94	1/2	12.70	13/16	20.64	1 1/2	1 1/2	3/16	4.76	3/16	4.76	1 1/2	38.10
5/16	7.94	1/2	12.70	27/32	21.43	1 1/2	1 1/2	3/16	4.76	3/16	4.76	1 1/2	38.10
5/16	7.94	1/2	12.70	7/8	22.22	1 1/2	1 1/2	3/16	4.76	3/16	4.76	1 1/2	38.10
5/16	7.94	1/2	12.70	29/32	23.02	1 1/2	1 1/2	3/16	4.76	3/16	4.76	1 1/2	38.10
5/16	7.94	1/2	12.70	15/16	23.81	1 1/2	1 1/2	3/16	4.76	3/16	4.76	1 1/2	38.10
5/16	7.94	1/2	12.70	31/32	24.61	1 1/2	1 1/2	3/16	4.76	3/16	4.76	1 1/2	38.10
5/16	7.94	1/2	12.70	1	25.40	1 1/2	1 1/2	3/16	4.76	3/16	4.76	1 1/2	38.10
5/16	7.94	1/2	12.70	1 1/8	28.57	1 1/2	1 1/2	3/16	4.76	3/16	4.76	1 1/2	38.10
5/16	7.94	1/2	12.70	1 1/4	31.75	1 1/2	1 1/2	3/16	4.76	3/16	4.76	1 1/2	38.10
11/32	8.73	1/2	12.70	21/32	16.67	1 1/2	1 1/2	3/16	4.76	3/16	4.76	1 1/2	38.10
11/32	8.73	1/2	12.70	11/16	17.46	1 1/2	1 1/2	3/16	4.76	3/16	4.76	1 1/2	38.10
11/32	8.73	1/2	12.70	23/32	18.26	1 1/2	1 1/2	3/16	4.76	3/16	4.76	1 1/2	38.10
11/32	8.73	1/2	12.70	3/4	19.05	1 1/2	1 1/2	3/16	4.76	3/16	4.76	1 1/2	38.10
11/32	8.73	1/2	12.70	25/32	19.84	1 1/2	1 1/2	3/16	4.76	3/16	4.76	1 1/2	38.10
11/32	8.73	1/2	12.70	13/16	20.64	1 1/2	1 1/2	3/16	4.76	3/16	4.76	1 1/2	38.10
11/32	8.73	1/2	12.70	27/32	21.43	1 1/2	1 1/2	3/16	4.76	3/16	4.76	1 1/2	38.10
11/32	8.73	1/2	12.70	7/8	22.22	1 1/2	1 1/2	3/16	4.76	3/16	4.76	1 1/2	38.10
11/32	8.73	1/2	12.70	29/32	23.02	1 1/2	1 1/2	3/16	4.76	3/16	4.76	1 1/2	38.10
11/32	8.73	1/2	12.70	15/16	23.81	1 1/2	1 1/2	3/16	4.76	3/16	4.76	1 1/2	38.10
11/32	8.73	1/2	12.70	31/32	24.61	1 1/2	1 1/2	3/16	4.76	3/16	4.76	1 1/2	38.10
11/32	8.73	1/2	12.70	1	25.40	1 1/2	1 1/2	3/16	4.76	3/16	4.76	1 1/2	38.10
11/32	8.73	1/2	12.70	1 1/8	28.57	1 1/2	1 1/2	3/16	4.76	3/16	4.76	1 1/2	38.10
11/32	8.73	1/2	12.70	1 1/4	31.75	1 1/2	1 1/2	3/16	4.76	3/16	4.76	1 1/2	38.10
3/8	9.52	1/2	12.70	21/32	16.67	1 1/2	1 1/2	3/16	4.76	3/16	4.76	1 1/2	38.10
3/8	9.52	1/2	12.70	11/16	17.46	1 1/2	1 1/2	3/16	4.76	3/16	4.76	1 1/2	38.10
3/8	9.52	1/2	12.70	23/32	18.26	1 1/2	1 1/2	3/16	4.76	3/16	4.76	1 1/2	38.10
3/8	9.52	1/2	12.70	3/4	19.05	1 1/2	1 1/2	3/16	4.76	3/16	4.76	1 1/2	38.10
3/8	9.52	1/2	12.70	25/32	19.84	1 1/2	1 1/2	3/16	4.76	3/16	4.76	1 1/2	38.10
3/8	9.52	1/2	12.70	13/16	20.64	1 1/2	1 1/2	3/16	4.76	3/16	4.76	1 1/2	38.10
3/8	9.52	1/2	12.70	27/32	21.43	1 1/2	1 1/2	3/16	4.76	3/16	4.76	1 1/2	38.10
3/8	9.52	1/2	12.70	7/8	22.22	1 1/2	1 1/2	3/16	4.76	3/16	4.76	1 1/2	38.10
3/8	9.52	1/2	12.70	29/32	23.02	1 1/2	1 1/2	3/16	4.76	3/16	4.76	1 1/2	38.10
3/8	9.52	1/2	12.70	15/16	23.81	1 1/2	1 1/2	3/16	4.76	3/16	4.76	1 1/2	38.10
3/8	9.52	1/2	12.70	31/32	24.61	1 1/2	1 1/2	3/16	4.76	3/16	4.76	1 1/2	38.10

www.globaltungsten.com

B		E		D		M	A	L		T		C	
inch	mm	inch	mm	inch	mm	inch	inch	inch	mm	inch	mm	inch	mm
3/8	9.52	1/2	12.70	1	25.40	1 1/2	1 1/2	3/16	4.76	3/16	4.76	1 1/2	38.10
3/8	9.52	1/2	12.70	1 1/8	28.57	1 1/2	1 1/2	3/16	4.76	3/16	4.76	1 1/2	38.10
3/8	9.52	1/2	12.70	1 1/4	31.75	1 1/2	1 1/2	3/16	4.76	3/16	4.76	1 1/2	38.10
13/32	10.32	1/2	12.70	21/32	16.67	1 1/2	1 1/2	3/16	4.76	3/16	4.76	1 1/2	38.10
13/32	10.32	1/2	12.70	11/16	17.46	1 1/2	1 1/2	3/16	4.76	3/16	4.76	1 1/2	38.10
13/32	10.32	1/2	12.70	23/32	18.26	1 1/2	1 1/2	3/16	4.76	3/16	4.76	1 1/2	38.10
13/32	10.32	1/2	12.70	3/4	19.05	1 1/2	1 1/2	3/16	4.76	3/16	4.76	1 1/2	38.10
13/32	10.32	1/2	12.70	25/32	19.84	1 1/2	1 1/2	3/16	4.76	3/16	4.76	1 1/2	38.10
13/32	10.32	1/2	12.70	13/16	20.64	1 1/2	1 1/2	3/16	4.76	3/16	4.76	1 1/2	38.10
13/32	10.32	1/2	12.70	27/32	21.43	1 1/2	1 1/2	3/16	4.76	3/16	4.76	1 1/2	38.10
13/32	10.32	1/2	12.70	7/8	22.22	1 1/2	1 1/2	3/16	4.76	3/16	4.76	1 1/2	38.10
13/32	10.32	1/2	12.70	29/32	23.02	1 1/2	1 1/2	3/16	4.76	3/16	4.76	1 1/2	38.10
13/32	10.32	1/2	12.70	15/16	23.81	1 1/2	1 1/2	3/16	4.76	3/16	4.76	1 1/2	38.10
13/32	10.32	1/2	12.70	31/32	24.61	1 1/2	1 1/2	3/16	4.76	3/16	4.76	1 1/2	38.10
13/32	10.32	1/2	12.70	1	25.40	1 1/2	1 1/2	3/16	4.76	3/16	4.76	1 1/2	38.10
13/32	10.32	1/2	12.70	1 1/8	28.57	1 1/2	1 1/2	3/16	4.76	3/16	4.76	1 1/2	38.10
13/32	10.32	1/2	12.70	1 1/4	31.75	1 1/2	1 1/2	3/16	4.76	3/16	4.76	1 1/2	38.10
7/16	11.11	1/2	12.70	21/32	16.67	1 1/2	1 1/2	3/16	4.76	3/16	4.76	1 1/2	38.10
7/16	11.11	1/2	12.70	11/16	17.46	1 1/2	1 1/2	3/16	4.76	3/16	4.76	1 1/2	38.10
7/16	11.11	1/2	12.70	23/32	18.26	1 1/2	1 1/2	3/16	4.76	3/16	4.76	1 1/2	38.10
7/16	11.11	1/2	12.70	3/4	19.05	1 1/2	1 1/2	3/16	4.76	3/16	4.76	1 1/2	38.10
7/16	11.11	1/2	12.70	25/32	19.84	1 1/2	1 1/2	3/16	4.76	3/16	4.76	1 1/2	38.10
7/16	11.11	1/2	12.70	13/16	20.64	1 1/2	1 1/2	3/16	4.76	3/16	4.76	1 1/2	38.10
7/16	11.11	1/2	12.70	27/32	21.43	1 1/2	1 1/2	3/16	4.76	3/16	4.76	1 1/2	38.10
7/16	11.11	1/2	12.70	7/8	22.22	1 1/2	1 1/2	3/16	4.76	3/16	4.76	1 1/2	38.10
7/16	11.11	1/2	12.70	29/32	23.02	1 1/2	1 1/2	3/16	4.76	3/16	4.76	1 1/2	38.10
7/16	11.11	1/2	12.70	15/16	23.81	1 1/2	1 1/2	3/16	4.76	3/16	4.76	1 1/2	38.10
7/16	11.11	1/2	12.70	31/32	24.61	1 1/2	1 1/2	3/16	4.76	3/16	4.76	1 1/2	38.10
7/16	11.11	1/2	12.70	1	25.40	1 1/2	1 1/2	3/16	4.76	3/16	4.76	1 1/2	38.10
7/16	11.11	1/2	12.70	1 1/8	28.57	1 1/2	1 1/2	3/16	4.76	3/16	4.76	1 1/2	38.10
7/16	11.11	1/2	12.70	1 1/4	31.75	1 1/2	1 1/2	3/16	4.76	3/16	4.76	1 1/2	38.10
15/32	11.91	1/2	12.70	21/32	16.67	1 1/2	1 1/2	3/16	4.76	3/16	4.76	1 1/2	38.10
15/32	11.91	1/2	12.70	11/16	17.46	1 1/2	1 1/2	3/16	4.76	3/16	4.76	1 1/2	38.10
15/32	11.91	1/2	12.70	23/32	18.26	1 1/2	1 1/2	3/16	4.76	3/16	4.76	1 1/2	38.10
15/32	11.91	1/2	12.70	3/4	19.05	1 1/2	1 1/2	3/16	4.76	3/16	4.76	1 1/2	38.10
15/32	11.91	1/2	12.70	25/32	19.84	1 1/2	1 1/2	3/16	4.76	3/16	4.76	1 1/2	38.10
15/32	11.91	1/2	12.70	13/16	20.64	1 1/2	1 1/2	3/16	4.76	3/16	4.76	1 1/2	38.10
15/32	11.91	1/2	12.70	27/32	21.43	1 1/2	1 1/2	3/16	4.76	3/16	4.76	1 1/2	38.10
15/32	11.91	1/2	12.70	7/8	22.22	1 1/2	1 1/2	3/16	4.76	3/16	4.76	1 1/2	38.10
15/32	11.91	1/2	12.70	29/32	23.02	1 1/2	1 1/2	3/16	4.76	3/16	4.76	1 1/2	38.10
15/32	11.91	1/2	12.70	15/16	23.81	1 1/2	1 1/2	3/16	4.76	3/16	4.76	1 1/2	38.10
15/32	11.91	1/2	12.70	31/32	24.61	1 1/2	1 1/2	3/16	4.76	3/16	4.76	1 1/2	38.10
15/32	11.91	1/2	12.70	1	25.40	1 1/2	1 1/2	3/16	4.76	3/16	4.76	1 1/2	38.10
15/32	11.91	1/2	12.70	1 1/8	28.57	1 1/2	1 1/2	3/16	4.76	3/16	4.76	1 1/2	38.10
15/32	11.91	1/2	12.70	1 1/4	31.75	1 1/2	1 1/2	3/16	4.76	3/16	4.76	1 1/2	38.10

www.globaltungsten.com

B		E		D		M	A	L		T		C	
inch	mm	inch	mm	inch	mm	inch	inch	inch	mm	inch	mm	inch	mm
1/2	12.70	1/2	12.70	21/32	16.67	1 1/2	1 1/2	3/16	4.76	3/16	4.76	1 1/2	38.10
1/2	12.70	1/2	12.70	11/16	17.46	1 1/2	1 1/2	3/16	4.76	3/16	4.76	1 1/2	38.10
1/2	12.70	1/2	12.70	23/32	18.26	1 1/2	1 1/2	3/16	4.76	3/16	4.76	1 1/2	38.10
1/2	12.70	1/2	12.70	3/4	19.05	1 1/2	1 1/2	3/16	4.76	3/16	4.76	1 1/2	38.10
1/2	12.70	1/2	12.70	25/32	19.84	1 1/2	1 1/2	3/16	4.76	3/16	4.76	1 1/2	38.10
1/2	12.70	1/2	12.70	13/16	20.64	1 1/2	1 1/2	3/16	4.76	3/16	4.76	1 1/2	38.10
1/2	12.70	1/2	12.70	27/32	21.43	1 1/2	1 1/2	3/16	4.76	3/16	4.76	1 1/2	38.10
1/2	12.70	1/2	12.70	7/8	22.22	1 1/2	1 1/2	3/16	4.76	3/16	4.76	1 1/2	38.10
1/2	12.70	1/2	12.70	29/32	23.02	1 1/2	1 1/2	3/16	4.76	3/16	4.76	1 1/2	38.10
1/2	12.70	1/2	12.70	15/16	23.81	1 1/2	1 1/2	3/16	4.76	3/16	4.76	1 1/2	38.10
1/2	12.70	1/2	12.70	31/32	24.61	1 1/2	1 1/2	3/16	4.76	3/16	4.76	1 1/2	38.10
1/2	12.70	1/2	12.70	1	25.40	1 1/2	1 1/2	3/16	4.76	3/16	4.76	1 1/2	38.10
1/2	12.70	1/2	12.70	1 1/8	28.57	1 1/2	1 1/2	3/16	4.76	3/16	4.76	1 1/2	38.10
1/2	12.70	1/2	12.70	1 1/4	31.75	1 1/2	1 1/2	3/16	4.76	3/16	4.76	1 1/2	38.10
3/16	4.76	3/8	9.52	19/32	15.08	1 1/2	1 1/2	3/16	4.76	3/16	4.76	1 1/2	38.10
3/16	4.76	3/8	9.52	5/8	15.87	1 1/2	1 1/2	3/16	4.76	3/16	4.76	1 1/2	38.10
3/16	4.76	3/8	9.52	21/32	16.67	1 1/2	1 1/2	3/16	4.76	3/16	4.76	1 1/2	38.10
3/16	4.76	3/8	9.52	11/16	17.46	1 1/2	1 1/2	3/16	4.76	3/16	4.76	1 1/2	38.10
3/16	4.76	3/8	9.52	23/32	18.26	1 1/2	1 1/2	3/16	4.76	3/16	4.76	1 1/2	38.10
3/16	4.76	3/8	9.52	3/4	19.05	1 1/2	1 1/2	3/16	4.76	3/16	4.76	1 1/2	38.10
3/16	4.76	3/8	9.52	25/32	19.84	1 1/2	1 1/2	3/16	4.76	3/16	4.76	1 1/2	38.10
3/16	4.76	3/8	9.52	13/16	20.64	1 1/2	1 1/2	3/16	4.76	3/16	4.76	1 1/2	38.10
3/16	4.76	3/8	9.52	27/32	21.43	1 1/2	1 1/2	3/16	4.76	3/16	4.76	1 1/2	38.10
3/16	4.76	3/8	9.52	7/8	22.22	1 1/2	1 1/2	3/16	4.76	3/16	4.76	1 1/2	38.10
3/16	4.76	3/8	9.52	29/32	23.02	1 1/2	1 1/2	3/16	4.76	3/16	4.76	1 1/2	38.10
3/16	4.76	3/8	9.52	15/16	23.81	1 1/2	1 1/2	3/16	4.76	3/16	4.76	1 1/2	38.10
3/16	4.76	3/8	9.52	31/32	24.61	1 1/2	1 1/2	3/16	4.76	3/16	4.76	1 1/2	38.10
3/16	4.76	3/8	9.52	1	25.40	1 1/2	1 1/2	3/16	4.76	3/16	4.76	1 1/2	38.10
3/16	4.76	3/8	9.52	1 1/8	28.57	1 1/2	1 1/2	3/16	4.76	3/16	4.76	1 1/2	38.10
3/16	4.76	3/8	9.52	1 1/4	31.75	1 1/2	1 1/2	3/16	4.76	3/16	4.76	1 1/2	38.10
7/32	5.56	3/8	9.52	19/32	15.08	1 1/2	1 1/2	3/16	4.76	3/16	4.76	1 1/2	38.10
7/32	5.56	3/8	9.52	5/8	15.87	1 1/2	1 1/2	3/16	4.76	3/16	4.76	1 1/2	38.10
7/32	5.56	3/8	9.52	21/32	16.67	1 1/2	1 1/2	3/16	4.76	3/16	4.76	1 1/2	38.10
7/32	5.56	3/8	9.52	11/16	17.46	1 1/2	1 1/2	3/16	4.76	3/16	4.76	1 1/2	38.10
7/32	5.56	3/8	9.52	23/32	18.26	1 1/2	1 1/2	3/16	4.76	3/16	4.76	1 1/2	38.10
7/32	5.56	3/8	9.52	3/4	19.05	1 1/2	1 1/2	3/16	4.76	3/16	4.76	1 1/2	38.10
7/32	5.56	3/8	9.52	25/32	19.84	1 1/2	1 1/2	3/16	4.76	3/16	4.76	1 1/2	38.10
7/32	5.56	3/8	9.52	13/16	20.64	1 1/2	1 1/2	3/16	4.76	3/16	4.76	1 1/2	38.10
7/32	5.56	3/8	9.52	27/32	21.43	1 1/2	1 1/2	3/16	4.76	3/16	4.76	1 1/2	38.10
7/32	5.56	3/8	9.52	7/8	22.22	1 1/2	1 1/2	3/16	4.76	3/16	4.76	1 1/2	38.10
7/32	5.56	3/8	9.52	29/32	23.02	1 1/2	1 1/2	3/16	4.76	3/16	4.76	1 1/2	38.10
7/32	5.56	3/8	9.52	15/16	23.81	1 1/2	1 1/2	3/16	4.76	3/16	4.76	1 1/2	38.10
7/32	5.56	3/8	9.52	31/32	24.61	1 1/2	1 1/2	3/16	4.76	3/16	4.76	1 1/2	38.10
7/32	5.56	3/8	9.52	1	25.40	1 1/2	1 1/2	3/16	4.76	3/16	4.76	1 1/2	38.10
7/32	5.56	3/8	9.52	1 1/8	28.57	1 1/2	1 1/2	3/16	4.76	3/16	4.76	1 1/2	38.10

www.globaltungsten.com

B		E		D		M	A	L		T		C	
inch	mm	inch	mm	inch	mm	inch	inch	inch	mm	inch	mm	inch	mm
7/32	5.56	3/8	9.52	1 1/4	31.75	1 1/2	1 1/2	3/16	4.76	3/16	4.76	1 1/2	38.10
1/4	6.35	3/8	9.52	19/32	15.08	1 1/2	1 1/2	3/16	4.76	3/16	4.76	1 1/2	38.10
1/4	6.35	3/8	9.52	5/8	15.87	1 1/2	1 1/2	3/16	4.76	3/16	4.76	1 1/2	38.10
1/4	6.35	3/8	9.52	21/32	16.67	1 1/2	1 1/2	3/16	4.76	3/16	4.76	1 1/2	38.10
1/4	6.35	3/8	9.52	11/16	17.46	1 1/2	1 1/2	3/16	4.76	3/16	4.76	1 1/2	38.10
1/4	6.35	3/8	9.52	23/32	18.26	1 1/2	1 1/2	3/16	4.76	3/16	4.76	1 1/2	38.10
1/4	6.35	3/8	9.52	3/4	19.05	1 1/2	1 1/2	3/16	4.76	3/16	4.76	1 1/2	38.10
1/4	6.35	3/8	9.52	25/32	19.84	1 1/2	1 1/2	3/16	4.76	3/16	4.76	1 1/2	38.10
1/4	6.35	3/8	9.52	13/16	20.64	1 1/2	1 1/2	3/16	4.76	3/16	4.76	1 1/2	38.10
1/4	6.35	3/8	9.52	27/32	21.43	1 1/2	1 1/2	3/16	4.76	3/16	4.76	1 1/2	38.10
1/4	6.35	3/8	9.52	7/8	22.22	1 1/2	1 1/2	3/16	4.76	3/16	4.76	1 1/2	38.10
1/4	6.35	3/8	9.52	29/32	23.02	1 1/2	1 1/2	3/16	4.76	3/16	4.76	1 1/2	38.10
1/4	6.35	3/8	9.52	15/16	23.81	1 1/2	1 1/2	3/16	4.76	3/16	4.76	1 1/2	38.10
1/4	6.35	3/8	9.52	31/32	24.61	1 1/2	1 1/2	3/16	4.76	3/16	4.76	1 1/2	38.10
1/4	6.35	3/8	9.52	1	25.40	1 1/2	1 1/2	3/16	4.76	3/16	4.76	1 1/2	38.10
1/4	6.35	3/8	9.52	1 1/8	28.57	1 1/2	1 1/2	3/16	4.76	3/16	4.76	1 1/2	38.10
1/4	6.35	3/8	9.52	1 1/4	31.75	1 1/2	1 1/2	3/16	4.76	3/16	4.76	1 1/2	38.10
9/32	7.14	3/8	9.52	19/32	15.08	1 1/2	1 1/2	3/16	4.76	3/16	4.76	1 1/2	38.10
9/32	7.14	3/8	9.52	5/8	15.87	1 1/2	1 1/2	3/16	4.76	3/16	4.76	1 1/2	38.10
9/32	7.14	3/8	9.52	21/32	16.67	1 1/2	1 1/2	3/16	4.76	3/16	4.76	1 1/2	38.10
9/32	7.14	3/8	9.52	11/16	17.46	1 1/2	1 1/2	3/16	4.76	3/16	4.76	1 1/2	38.10
9/32	7.14	3/8	9.52	23/32	18.26	1 1/2	1 1/2	3/16	4.76	3/16	4.76	1 1/2	38.10
9/32	7.14	3/8	9.52	3/4	19.05	1 1/2	1 1/2	3/16	4.76	3/16	4.76	1 1/2	38.10
9/32	7.14	3/8	9.52	25/32	19.84	1 1/2	1 1/2	3/16	4.76	3/16	4.76	1 1/2	38.10
9/32	7.14	3/8	9.52	13/16	20.64	1 1/2	1 1/2	3/16	4.76	3/16	4.76	1 1/2	38.10
9/32	7.14	3/8	9.52	27/32	21.43	1 1/2	1 1/2	3/16	4.76	3/16	4.76	1 1/2	38.10
9/32	7.14	3/8	9.52	7/8	22.22	1 1/2	1 1/2	3/16	4.76	3/16	4.76	1 1/2	38.10
9/32	7.14	3/8	9.52	29/32	23.02	1 1/2	1 1/2	3/16	4.76	3/16	4.76	1 1/2	38.10
9/32	7.14	3/8	9.52	15/16	23.81	1 1/2	1 1/2	3/16	4.76	3/16	4.76	1 1/2	38.10
9/32	7.14	3/8	9.52	31/32	24.61	1 1/2	1 1/2	3/16	4.76	3/16	4.76	1 1/2	38.10
9/32	7.14	3/8	9.52	1	25.40	1 1/2	1 1/2	3/16	4.76	3/16	4.76	1 1/2	38.10
9/32	7.14	3/8	9.52	1 1/8	28.57	1 1/2	1 1/2	3/16	4.76	3/16	4.76	1 1/2	38.10
9/32	7.14	3/8	9.52	1 1/4	31.75	1 1/2	1 1/2	3/16	4.76	3/16	4.76	1 1/2	38.10
5/16	7.94	3/8	9.52	19/32	15.08	1 1/2	1 1/2	3/16	4.76	3/16	4.76	1 1/2	38.10
5/16	7.94	3/8	9.52	5/8	15.87	1 1/2	1 1/2	3/16	4.76	3/16	4.76	1 1/2	38.10
5/16	7.94	3/8	9.52	21/32	16.67	1 1/2	1 1/2	3/16	4.76	3/16	4.76	1 1/2	38.10
5/16	7.94	3/8	9.52	11/16	17.46	1 1/2	1 1/2	3/16	4.76	3/16	4.76	1 1/2	38.10
5/16	7.94	3/8	9.52	23/32	18.26	1 1/2	1 1/2	3/16	4.76	3/16	4.76	1 1/2	38.10
5/16	7.94	3/8	9.52	3/4	19.05	1 1/2	1 1/2	3/16	4.76	3/16	4.76	1 1/2	38.10
5/16	7.94	3/8	9.52	25/32	19.84	1 1/2	1 1/2	3/16	4.76	3/16	4.76	1 1/2	38.10
5/16	7.94	3/8	9.52	13/16	20.64	1 1/2	1 1/2	3/16	4.76	3/16	4.76	1 1/2	38.10
5/16	7.94	3/8	9.52	27/32	21.43	1 1/2	1 1/2	3/16	4.76	3/16	4.76	1 1/2	38.10
5/16	7.94	3/8	9.52	7/8	22.22	1 1/2	1 1/2	3/16	4.76	3/16	4.76	1 1/2	38.10
5/16	7.94	3/8	9.52	29/32	23.02	1 1/2	1 1/2	3/16	4.76	3/16	4.76	1 1/2	38.10
5/16	7.94	3/8	9.52	15/16	23.81	1 1/2	1 1/2	3/16	4.76	3/16	4.76	1 1/2	38.10

www.globaltungsten.com

B		E		D		M	A	L		T		C	
inch	mm	inch	mm	inch	mm	inch	inch	inch	mm	inch	mm	inch	mm
5/16	7.94	3/8	9.52	31/32	24.61	1 1/2	1 1/2	3/16	4.76	3/16	4.76	1 1/2	38.10
5/16	7.94	3/8	9.52	1	25.40	1 1/2	1 1/2	3/16	4.76	3/16	4.76	1 1/2	38.10
5/16	7.94	3/8	9.52	1 1/8	28.57	1 1/2	1 1/2	3/16	4.76	3/16	4.76	1 1/2	38.10
5/16	7.94	3/8	9.52	1 1/4	31.75	1 1/2	1 1/2	3/16	4.76	3/16	4.76	1 1/2	38.10
11/32	8.73	3/8	9.52	19/32	15.08	1 1/2	1 1/2	3/16	4.76	3/16	4.76	1 1/2	38.10
11/32	8.73	3/8	9.52	5/8	15.87	1 1/2	1 1/2	3/16	4.76	3/16	4.76	1 1/2	38.10
11/32	8.73	3/8	9.52	21/32	16.67	1 1/2	1 1/2	3/16	4.76	3/16	4.76	1 1/2	38.10
11/32	8.73	3/8	9.52	11/16	17.46	1 1/2	1 1/2	3/16	4.76	3/16	4.76	1 1/2	38.10
11/32	8.73	3/8	9.52	23/32	18.26	1 1/2	1 1/2	3/16	4.76	3/16	4.76	1 1/2	38.10
11/32	8.73	3/8	9.52	3/4	19.05	1 1/2	1 1/2	3/16	4.76	3/16	4.76	1 1/2	38.10
11/32	8.73	3/8	9.52	25/32	19.84	1 1/2	1 1/2	3/16	4.76	3/16	4.76	1 1/2	38.10
11/32	8.73	3/8	9.52	13/16	20.64	1 1/2	1 1/2	3/16	4.76	3/16	4.76	1 1/2	38.10
11/32	8.73	3/8	9.52	27/32	21.43	1 1/2	1 1/2	3/16	4.76	3/16	4.76	1 1/2	38.10
11/32	8.73	3/8	9.52	7/8	22.22	1 1/2	1 1/2	3/16	4.76	3/16	4.76	1 1/2	38.10
11/32	8.73	3/8	9.52	29/32	23.02	1 1/2	1 1/2	3/16	4.76	3/16	4.76	1 1/2	38.10
11/32	8.73	3/8	9.52	15/16	23.81	1 1/2	1 1/2	3/16	4.76	3/16	4.76	1 1/2	38.10
11/32	8.73	3/8	9.52	31/32	24.61	1 1/2	1 1/2	3/16	4.76	3/16	4.76	1 1/2	38.10
11/32	8.73	3/8	9.52	1	25.40	1 1/2	1 1/2	3/16	4.76	3/16	4.76	1 1/2	38.10
11/32	8.73	3/8	9.52	1 1/8	28.57	1 1/2	1 1/2	3/16	4.76	3/16	4.76	1 1/2	38.10
11/32	8.73	3/8	9.52	1 1/4	31.75	1 1/2	1 1/2	3/16	4.76	3/16	4.76	1 1/2	38.10
3/8	9.52	3/8	9.52	19/32	15.08	1 1/2	1 1/2	3/16	4.76	3/16	4.76	1 1/2	38.10
3/8	9.52	3/8	9.52	5/8	15.87	1 1/2	1 1/2	3/16	4.76	3/16	4.76	1 1/2	38.10
3/8	9.52	3/8	9.52	21/32	16.67	1 1/2	1 1/2	3/16	4.76	3/16	4.76	1 1/2	38.10
3/8	9.52	3/8	9.52	11/16	17.46	1 1/2	1 1/2	3/16	4.76	3/16	4.76	1 1/2	38.10
3/8	9.52	3/8	9.52	23/32	18.26	1 1/2	1 1/2	3/16	4.76	3/16	4.76	1 1/2	38.10
3/8	9.52	3/8	9.52	3/4	19.05	1 1/2	1 1/2	3/16	4.76	3/16	4.76	1 1/2	38.10
3/8	9.52	3/8	9.52	25/32	19.84	1 1/2	1 1/2	3/16	4.76	3/16	4.76	1 1/2	38.10
3/8	9.52	3/8	9.52	13/16	20.64	1 1/2	1 1/2	3/16	4.76	3/16	4.76	1 1/2	38.10
3/8	9.52	3/8	9.52	27/32	21.43	1 1/2	1 1/2	3/16	4.76	3/16	4.76	1 1/2	38.10
3/8	9.52	3/8	9.52	7/8	22.22	1 1/2	1 1/2	3/16	4.76	3/16	4.76	1 1/2	38.10
3/8	9.52	3/8	9.52	29/32	23.02	1 1/2	1 1/2	3/16	4.76	3/16	4.76	1 1/2	38.10
3/8	9.52	3/8	9.52	15/16	23.81	1 1/2	1 1/2	3/16	4.76	3/16	4.76	1 1/2	38.10
3/8	9.52	3/8	9.52	31/32	24.61	1 1/2	1 1/2	3/16	4.76	3/16	4.76	1 1/2	38.10
3/8	9.52	3/8	9.52	1	25.40	1 1/2	1 1/2	3/16	4.76	3/16	4.76	1 1/2	38.10
3/8	9.52	3/8	9.52	1 1/8	28.57	1 1/2	1 1/2	3/16	4.76	3/16	4.76	1 1/2	38.10
3/8	9.52	3/8	9.52	1 1/4	31.75	1 1/2	1 1/2	3/16	4.76	3/16	4.76	1 1/2	38.10
3/16	4.76	7/8	22.22	1 1/8	28.57	1 3/8	1 3/8	3/16	4.76	3/16	4.76	1 1/2	38.10
7/32	5.56	7/8	22.22	1 1/8	28.57	1 3/8	1 3/8	3/16	4.76	3/16	4.76	1 1/2	38.10
1/4	6.35	7/8	22.22	1 1/8	28.57	1 3/8	1 3/8	3/16	4.76	3/16	4.76	1 1/2	38.10
9/32	7.14	7/8	22.22	1 1/8	28.57	1 3/8	1 3/8	3/16	4.76	3/16	4.76	1 1/2	38.10
5/16	7.94	7/8	22.22	1 1/8	28.57	1 3/8	1 3/8	3/16	4.76	3/16	4.76	1 1/2	38.10
11/32	8.73	7/8	22.22	1 1/8	28.57	1 3/8	1 3/8	3/16	4.76	3/16	4.76	1 1/2	38.10
3/8	9.52	7/8	22.22	1 1/8	28.57	1 3/8	1 3/8	3/16	4.76	3/16	4.76	1 1/2	38.10
13/32	10.32	7/8	22.22	1 1/8	28.57	1 3/8	1 3/8	3/16	4.76	3/16	4.76	1 1/2	38.10
7/16	11.11	7/8	22.22	1 1/8	28.57	1 3/8	1 3/8	3/16	4.76	3/16	4.76	1 1/2	38.10

www.globaltungsten.com

B		E		D		M	A	L		T		C	
inch	mm	inch	mm	inch	mm	inch	inch	inch	mm	inch	mm	inch	mm
15/32	11.91	7/8	22.22	1 1/8	28.57	1 3/8	1 3/8	3/16	4.76	3/16	4.76	1 1/2	38.10
1/2	12.70	7/8	22.22	1 1/8	28.57	1 3/8	1 3/8	3/16	4.76	3/16	4.76	1 1/2	38.10
17/32	13.49	7/8	22.22	1 1/8	28.57	1 3/8	1 3/8	3/16	4.76	3/16	4.76	1 1/2	38.10
9/16	14.29	7/8	22.22	1 1/8	28.57	1 3/8	1 3/8	3/16	4.76	3/16	4.76	1 1/2	38.10
19/32	15.08	7/8	22.22	1 1/8	28.57	1 3/8	1 3/8	3/16	4.76	3/16	4.76	1 1/2	38.10
5/8	15.87	7/8	22.22	1 1/8	28.57	1 3/8	1 3/8	3/16	4.76	3/16	4.76	1 1/2	38.10
21/32	16.67	7/8	22.22	1 1/8	28.57	1 3/8	1 3/8	3/16	4.76	3/16	4.76	1 1/2	38.10
11/16	17.46	7/8	22.22	1 1/8	28.57	1 3/8	1 3/8	3/16	4.76	3/16	4.76	1 1/2	38.10
23/32	18.26	7/8	22.22	1 1/8	28.57	1 3/8	1 3/8	3/16	4.76	3/16	4.76	1 1/2	38.10
3/4	19.05	7/8	22.22	1 1/8	28.57	1 3/8	1 3/8	3/16	4.76	3/16	4.76	1 1/2	38.10
25/32	19.84	7/8	22.22	1 1/8	28.57	1 3/8	1 3/8	3/16	4.76	3/16	4.76	1 1/2	38.10
13/16	20.64	7/8	22.22	1 1/8	28.57	1 3/8	1 3/8	3/16	4.76	3/16	4.76	1 1/2	38.10
27/32	21.43	7/8	22.22	1 1/8	28.57	1 3/8	1 3/8	3/16	4.76	3/16	4.76	1 1/2	38.10
7/8	22.22	7/8	22.22	1 1/8	28.57	1 3/8	1 3/8	3/16	4.76	3/16	4.76	1 1/2	38.10
3/16	4.76	3/4	19.05	29/32	23.02	1 3/8	1 3/8	3/16	4.76	3/16	4.76	1 1/2	38.10
7/32	5.56	3/4	19.05	29/32	23.02	1 3/8	1 3/8	3/16	4.76	3/16	4.76	1 1/2	38.10
1/4	6.35	3/4	19.05	29/32	23.02	1 3/8	1 3/8	3/16	4.76	3/16	4.76	1 1/2	38.10
9/32	7.14	3/4	19.05	29/32	23.02	1 3/8	1 3/8	3/16	4.76	3/16	4.76	1 1/2	38.10
5/16	7.94	3/4	19.05	29/32	23.02	1 3/8	1 3/8	3/16	4.76	3/16	4.76	1 1/2	38.10
11/32	8.73	3/4	19.05	29/32	23.02	1 3/8	1 3/8	3/16	4.76	3/16	4.76	1 1/2	38.10
3/8	9.52	3/4	19.05	29/32	23.02	1 3/8	1 3/8	3/16	4.76	3/16	4.76	1 1/2	38.10
13/32	10.32	3/4	19.05	29/32	23.02	1 3/8	1 3/8	3/16	4.76	3/16	4.76	1 1/2	38.10
7/16	11.11	3/4	19.05	29/32	23.02	1 3/8	1 3/8	3/16	4.76	3/16	4.76	1 1/2	38.10
15/32	11.91	3/4	19.05	29/32	23.02	1 3/8	1 3/8	3/16	4.76	3/16	4.76	1 1/2	38.10
1/2	12.70	3/4	19.05	29/32	23.02	1 3/8	1 3/8	3/16	4.76	3/16	4.76	1 1/2	38.10
17/32	13.49	3/4	19.05	29/32	23.02	1 3/8	1 3/8	3/16	4.76	3/16	4.76	1 1/2	38.10
9/16	14.29	3/4	19.05	29/32	23.02	1 3/8	1 3/8	3/16	4.76	3/16	4.76	1 1/2	38.10
19/32	15.08	3/4	19.05	29/32	23.02	1 3/8	1 3/8	3/16	4.76	3/16	4.76	1 1/2	38.10
5/8	15.87	3/4	19.05	29/32	23.02	1 3/8	1 3/8	3/16	4.76	3/16	4.76	1 1/2	38.10
21/32	16.67	3/4	19.05	29/32	23.02	1 3/8	1 3/8	3/16	4.76	3/16	4.76	1 1/2	38.10
11/16	17.46	3/4	19.05	29/32	23.02	1 3/8	1 3/8	3/16	4.76	3/16	4.76	1 1/2	38.10
23/32	18.26	3/4	19.05	29/32	23.02	1 3/8	1 3/8	3/16	4.76	3/16	4.76	1 1/2	38.10
3/4	19.05	3/4	19.05	29/32	23.02	1 3/8	1 3/8	3/16	4.76	3/16	4.76	1 1/2	38.10
3/16	4.76	3/4	19.05	15/16	23.81	1 3/8	1 3/8	3/16	4.76	3/16	4.76	1 1/2	38.10
7/32	5.56	3/4	19.05	15/16	23.81	1 3/8	1 3/8	3/16	4.76	3/16	4.76	1 1/2	38.10
1/4	6.35	3/4	19.05	15/16	23.81	1 3/8	1 3/8	3/16	4.76	3/16	4.76	1 1/2	38.10
9/32	7.14	3/4	19.05	15/16	23.81	1 3/8	1 3/8	3/16	4.76	3/16	4.76	1 1/2	38.10
5/16	7.94	3/4	19.05	15/16	23.81	1 3/8	1 3/8	3/16	4.76	3/16	4.76	1 1/2	38.10
11/32	8.73	3/4	19.05	15/16	23.81	1 3/8	1 3/8	3/16	4.76	3/16	4.76	1 1/2	38.10
3/8	9.52	3/4	19.05	15/16	23.81	1 3/8	1 3/8	3/16	4.76	3/16	4.76	1 1/2	38.10
13/32	10.32	3/4	19.05	15/16	23.81	1 3/8	1 3/8	3/16	4.76	3/16	4.76	1 1/2	38.10
7/16	11.11	3/4	19.05	15/16	23.81	1 3/8	1 3/8	3/16	4.76	3/16	4.76	1 1/2	38.10
15/32	11.91	3/4	19.05	15/16	23.81	1 3/8	1 3/8	3/16	4.76	3/16	4.76	1 1/2	38.10
1/2	12.70	3/4	19.05	15/16	23.81	1 3/8	1 3/8	3/16	4.76	3/16	4.76	1 1/2	38.10
17/32	13.49	3/4	19.05	15/16	23.81	1 3/8	1 3/8	3/16	4.76	3/16	4.76	1 1/2	38.10

www.globaltungsten.com

B		E		D		M	A	L		T		C	
inch	mm	inch	mm	inch	mm	inch	inch	inch	mm	inch	mm	inch	mm
9/16	14.29	3/4	19.05	15/16	23.81	1 3/8	1 3/8	3/16	4.76	3/16	4.76	1 1/2	38.10
19/32	15.08	3/4	19.05	15/16	23.81	1 3/8	1 3/8	3/16	4.76	3/16	4.76	1 1/2	38.10
5/8	15.87	3/4	19.05	15/16	23.81	1 3/8	1 3/8	3/16	4.76	3/16	4.76	1 1/2	38.10
21/32	16.67	3/4	19.05	15/16	23.81	1 3/8	1 3/8	3/16	4.76	3/16	4.76	1 1/2	38.10
11/16	17.46	3/4	19.05	15/16	23.81	1 3/8	1 3/8	3/16	4.76	3/16	4.76	1 1/2	38.10
23/32	18.26	3/4	19.05	15/16	23.81	1 3/8	1 3/8	3/16	4.76	3/16	4.76	1 1/2	38.10
3/4	19.05	3/4	19.05	15/16	23.81	1 3/8	1 3/8	3/16	4.76	3/16	4.76	1 1/2	38.10
3/16	4.76	3/4	19.05	31/32	24.61	1 3/8	1 3/8	3/16	4.76	3/16	4.76	1 1/2	38.10
7/32	5.56	3/4	19.05	31/32	24.61	1 3/8	1 3/8	3/16	4.76	3/16	4.76	1 1/2	38.10
1/4	6.35	3/4	19.05	31/32	24.61	1 3/8	1 3/8	3/16	4.76	3/16	4.76	1 1/2	38.10
9/32	7.14	3/4	19.05	31/32	24.61	1 3/8	1 3/8	3/16	4.76	3/16	4.76	1 1/2	38.10
5/16	7.94	3/4	19.05	31/32	24.61	1 3/8	1 3/8	3/16	4.76	3/16	4.76	1 1/2	38.10
11/32	8.73	3/4	19.05	31/32	24.61	1 3/8	1 3/8	3/16	4.76	3/16	4.76	1 1/2	38.10
3/8	9.52	3/4	19.05	31/32	24.61	1 3/8	1 3/8	3/16	4.76	3/16	4.76	1 1/2	38.10
13/32	10.32	3/4	19.05	31/32	24.61	1 3/8	1 3/8	3/16	4.76	3/16	4.76	1 1/2	38.10
7/16	11.11	3/4	19.05	31/32	24.61	1 3/8	1 3/8	3/16	4.76	3/16	4.76	1 1/2	38.10
15/32	11.91	3/4	19.05	31/32	24.61	1 3/8	1 3/8	3/16	4.76	3/16	4.76	1 1/2	38.10
1/2	12.70	3/4	19.05	31/32	24.61	1 3/8	1 3/8	3/16	4.76	3/16	4.76	1 1/2	38.10
17/32	13.49	3/4	19.05	31/32	24.61	1 3/8	1 3/8	3/16	4.76	3/16	4.76	1 1/2	38.10
9/16	14.29	3/4	19.05	31/32	24.61	1 3/8	1 3/8	3/16	4.76	3/16	4.76	1 1/2	38.10
19/32	15.08	3/4	19.05	31/32	24.61	1 3/8	1 3/8	3/16	4.76	3/16	4.76	1 1/2	38.10
5/8	15.87	3/4	19.05	31/32	24.61	1 3/8	1 3/8	3/16	4.76	3/16	4.76	1 1/2	38.10
21/32	16.67	3/4	19.05	31/32	24.61	1 3/8	1 3/8	3/16	4.76	3/16	4.76	1 1/2	38.10
11/16	17.46	3/4	19.05	31/32	24.61	1 3/8	1 3/8	3/16	4.76	3/16	4.76	1 1/2	38.10
23/32	18.26	3/4	19.05	31/32	24.61	1 3/8	1 3/8	3/16	4.76	3/16	4.76	1 1/2	38.10
3/4	19.05	3/4	19.05	31/32	24.61	1 3/8	1 3/8	3/16	4.76	3/16	4.76	1 1/2	38.10
3/16	4.76	3/4	19.05	1	25.40	1 3/8	1 3/8	3/16	4.76	3/16	4.76	1 1/2	38.10
7/32	5.56	3/4	19.05	1	25.40	1 3/8	1 3/8	3/16	4.76	3/16	4.76	1 1/2	38.10
1/4	6.35	3/4	19.05	1	25.40	1 3/8	1 3/8	3/16	4.76	3/16	4.76	1 1/2	38.10
9/32	7.14	3/4	19.05	1	25.40	1 3/8	1 3/8	3/16	4.76	3/16	4.76	1 1/2	38.10
5/16	7.94	3/4	19.05	1	25.40	1 3/8	1 3/8	3/16	4.76	3/16	4.76	1 1/2	38.10
11/32	8.73	3/4	19.05	1	25.40	1 3/8	1 3/8	3/16	4.76	3/16	4.76	1 1/2	38.10
3/8	9.52	3/4	19.05	1	25.40	1 3/8	1 3/8	3/16	4.76	3/16	4.76	1 1/2	38.10
13/32	10.32	3/4	19.05	1	25.40	1 3/8	1 3/8	3/16	4.76	3/16	4.76	1 1/2	38.10
7/16	11.11	3/4	19.05	1	25.40	1 3/8	1 3/8	3/16	4.76	3/16	4.76	1 1/2	38.10
15/32	11.91	3/4	19.05	1	25.40	1 3/8	1 3/8	3/16	4.76	3/16	4.76	1 1/2	38.10
1/2	12.70	3/4	19.05	1	25.40	1 3/8	1 3/8	3/16	4.76	3/16	4.76	1 1/2	38.10
17/32	13.49	3/4	19.05	1	25.40	1 3/8	1 3/8	3/16	4.76	3/16	4.76	1 1/2	38.10
9/16	14.29	3/4	19.05	1	25.40	1 3/8	1 3/8	3/16	4.76	3/16	4.76	1 1/2	38.10
19/32	15.08	3/4	19.05	1	25.40	1 3/8	1 3/8	3/16	4.76	3/16	4.76	1 1/2	38.10
5/8	15.87	3/4	19.05	1	25.40	1 3/8	1 3/8	3/16	4.76	3/16	4.76	1 1/2	38.10
21/32	16.67	3/4	19.05	1	25.40	1 3/8	1 3/8	3/16	4.76	3/16	4.76	1 1/2	38.10
11/16	17.46	3/4	19.05	1	25.40	1 3/8	1 3/8	3/16	4.76	3/16	4.76	1 1/2	38.10
23/32	18.26	3/4	19.05	1	25.40	1 3/8	1 3/8	3/16	4.76	3/16	4.76	1 1/2	38.10
3/4	19.05	3/4	19.05	1	25.40	1 3/8	1 3/8	3/16	4.76	3/16	4.76	1 1/2	38.10

www.globaltungsten.com

B		E		D		M	A	L		T		C	
inch	mm	inch	mm	inch	mm	inch	inch	inch	mm	inch	mm	inch	mm
3/16	4.76	3/4	19.05	1 1/8	28.57	1 3/8	1 3/8	3/16	4.76	3/16	4.76	1 1/2	38.10
7/32	5.56	3/4	19.05	1 1/8	28.57	1 3/8	1 3/8	3/16	4.76	3/16	4.76	1 1/2	38.10
1/4	6.35	3/4	19.05	1 1/8	28.57	1 3/8	1 3/8	3/16	4.76	3/16	4.76	1 1/2	38.10
9/32	7.14	3/4	19.05	1 1/8	28.57	1 3/8	1 3/8	3/16	4.76	3/16	4.76	1 1/2	38.10
5/16	7.94	3/4	19.05	1 1/8	28.57	1 3/8	1 3/8	3/16	4.76	3/16	4.76	1 1/2	38.10
11/32	8.73	3/4	19.05	1 1/8	28.57	1 3/8	1 3/8	3/16	4.76	3/16	4.76	1 1/2	38.10
3/8	9.52	3/4	19.05	1 1/8	28.57	1 3/8	1 3/8	3/16	4.76	3/16	4.76	1 1/2	38.10
13/32	10.32	3/4	19.05	1 1/8	28.57	1 3/8	1 3/8	3/16	4.76	3/16	4.76	1 1/2	38.10
7/16	11.11	3/4	19.05	1 1/8	28.57	1 3/8	1 3/8	3/16	4.76	3/16	4.76	1 1/2	38.10
15/32	11.91	3/4	19.05	1 1/8	28.57	1 3/8	1 3/8	3/16	4.76	3/16	4.76	1 1/2	38.10
1/2	12.70	3/4	19.05	1 1/8	28.57	1 3/8	1 3/8	3/16	4.76	3/16	4.76	1 1/2	38.10
17/32	13.49	3/4	19.05	1 1/8	28.57	1 3/8	1 3/8	3/16	4.76	3/16	4.76	1 1/2	38.10
9/16	14.29	3/4	19.05	1 1/8	28.57	1 3/8	1 3/8	3/16	4.76	3/16	4.76	1 1/2	38.10
19/32	15.08	3/4	19.05	1 1/8	28.57	1 3/8	1 3/8	3/16	4.76	3/16	4.76	1 1/2	38.10
5/8	15.87	3/4	19.05	1 1/8	28.57	1 3/8	1 3/8	3/16	4.76	3/16	4.76	1 1/2	38.10
21/32	16.67	3/4	19.05	1 1/8	28.57	1 3/8	1 3/8	3/16	4.76	3/16	4.76	1 1/2	38.10
11/16	17.46	3/4	19.05	1 1/8	28.57	1 3/8	1 3/8	3/16	4.76	3/16	4.76	1 1/2	38.10
23/32	18.26	3/4	19.05	1 1/8	28.57	1 3/8	1 3/8	3/16	4.76	3/16	4.76	1 1/2	38.10
3/4	19.05	3/4	19.05	1 1/8	28.57	1 3/8	1 3/8	3/16	4.76	3/16	4.76	1 1/2	38.10
3/16	4.76	5/8	15.87	25/32	19.84	1 3/8	1 3/8	3/16	4.76	3/16	4.76	1 1/2	38.10
3/16	4.76	5/8	15.87	13/16	20.64	1 3/8	1 3/8	3/16	4.76	3/16	4.76	1 1/2	38.10
3/16	4.76	5/8	15.87	27/32	21.43	1 3/8	1 3/8	3/16	4.76	3/16	4.76	1 1/2	38.10
3/16	4.76	5/8	15.87	7/8	22.22	1 3/8	1 3/8	3/16	4.76	3/16	4.76	1 1/2	38.10
3/16	4.76	5/8	15.87	29/32	23.02	1 3/8	1 3/8	3/16	4.76	3/16	4.76	1 1/2	38.10
3/16	4.76	5/8	15.87	15/16	23.81	1 3/8	1 3/8	3/16	4.76	3/16	4.76	1 1/2	38.10
3/16	4.76	5/8	15.87	31/32	24.61	1 3/8	1 3/8	3/16	4.76	3/16	4.76	1 1/2	38.10
3/16	4.76	5/8	15.87	1	25.40	1 3/8	1 3/8	3/16	4.76	3/16	4.76	1 1/2	38.10
3/16	4.76	5/8	15.87	1 1/8	28.57	1 3/8	1 3/8	3/16	4.76	3/16	4.76	1 1/2	38.10
7/32	5.56	5/8	15.87	25/32	19.84	1 3/8	1 3/8	3/16	4.76	3/16	4.76	1 1/2	38.10
7/32	5.56	5/8	15.87	13/16	20.64	1 3/8	1 3/8	3/16	4.76	3/16	4.76	1 1/2	38.10
7/32	5.56	5/8	15.87	27/32	21.43	1 3/8	1 3/8	3/16	4.76	3/16	4.76	1 1/2	38.10
7/32	5.56	5/8	15.87	7/8	22.22	1 3/8	1 3/8	3/16	4.76	3/16	4.76	1 1/2	38.10
7/32	5.56	5/8	15.87	29/32	23.02	1 3/8	1 3/8	3/16	4.76	3/16	4.76	1 1/2	38.10
7/32	5.56	5/8	15.87	15/16	23.81	1 3/8	1 3/8	3/16	4.76	3/16	4.76	1 1/2	38.10
7/32	5.56	5/8	15.87	31/32	24.61	1 3/8	1 3/8	3/16	4.76	3/16	4.76	1 1/2	38.10
7/32	5.56	5/8	15.87	1	25.40	1 3/8	1 3/8	3/16	4.76	3/16	4.76	1 1/2	38.10
7/32	5.56	5/8	15.87	1 1/8	28.57	1 3/8	1 3/8	3/16	4.76	3/16	4.76	1 1/2	38.10
1/4	6.35	5/8	15.87	25/32	19.84	1 3/8	1 3/8	3/16	4.76	3/16	4.76	1 1/2	38.10
1/4	6.35	5/8	15.87	13/16	20.64	1 3/8	1 3/8	3/16	4.76	3/16	4.76	1 1/2	38.10
1/4	6.35	5/8	15.87	27/32	21.43	1 3/8	1 3/8	3/16	4.76	3/16	4.76	1 1/2	38.10
1/4	6.35	5/8	15.87	7/8	22.22	1 3/8	1 3/8	3/16	4.76	3/16	4.76	1 1/2	38.10
1/4	6.35	5/8	15.87	29/32	23.02	1 3/8	1 3/8	3/16	4.76	3/16	4.76	1 1/2	38.10
1/4	6.35	5/8	15.87	15/16	23.81	1 3/8	1 3/8	3/16	4.76	3/16	4.76	1 1/2	38.10
1/4	6.35	5/8	15.87	31/32	24.61	1 3/8	1 3/8	3/16	4.76	3/16	4.76	1 1/2	38.10
1/4	6.35	5/8	15.87	1	25.40	1 3/8	1 3/8	3/16	4.76	3/16	4.76	1 1/2	38.10

www.globaltungsten.com

B		E		D		M	A	L		T		C	
inch	mm	inch	mm	inch	mm	inch	inch	inch	mm	inch	mm	inch	mm
1/4	6.35	5/8	15.87	1 1/8	28.57	1 3/8	1 3/8	3/16	4.76	3/16	4.76	1 1/2	38.10
9/32	7.14	5/8	15.87	25/32	19.84	1 3/8	1 3/8	3/16	4.76	3/16	4.76	1 1/2	38.10
9/32	7.14	5/8	15.87	13/16	20.64	1 3/8	1 3/8	3/16	4.76	3/16	4.76	1 1/2	38.10
9/32	7.14	5/8	15.87	27/32	21.43	1 3/8	1 3/8	3/16	4.76	3/16	4.76	1 1/2	38.10
9/32	7.14	5/8	15.87	7/8	22.22	1 3/8	1 3/8	3/16	4.76	3/16	4.76	1 1/2	38.10
9/32	7.14	5/8	15.87	29/32	23.02	1 3/8	1 3/8	3/16	4.76	3/16	4.76	1 1/2	38.10
9/32	7.14	5/8	15.87	15/16	23.81	1 3/8	1 3/8	3/16	4.76	3/16	4.76	1 1/2	38.10
9/32	7.14	5/8	15.87	31/32	24.61	1 3/8	1 3/8	3/16	4.76	3/16	4.76	1 1/2	38.10
9/32	7.14	5/8	15.87	1	25.40	1 3/8	1 3/8	3/16	4.76	3/16	4.76	1 1/2	38.10
9/32	7.14	5/8	15.87	1 1/8	28.57	1 3/8	1 3/8	3/16	4.76	3/16	4.76	1 1/2	38.10
5/16	7.94	5/8	15.87	25/32	19.84	1 3/8	1 3/8	3/16	4.76	3/16	4.76	1 1/2	38.10
5/16	7.94	5/8	15.87	13/16	20.64	1 3/8	1 3/8	3/16	4.76	3/16	4.76	1 1/2	38.10
5/16	7.94	5/8	15.87	27/32	21.43	1 3/8	1 3/8	3/16	4.76	3/16	4.76	1 1/2	38.10
5/16	7.94	5/8	15.87	7/8	22.22	1 3/8	1 3/8	3/16	4.76	3/16	4.76	1 1/2	38.10
5/16	7.94	5/8	15.87	29/32	23.02	1 3/8	1 3/8	3/16	4.76	3/16	4.76	1 1/2	38.10
5/16	7.94	5/8	15.87	15/16	23.81	1 3/8	1 3/8	3/16	4.76	3/16	4.76	1 1/2	38.10
5/16	7.94	5/8	15.87	31/32	24.61	1 3/8	1 3/8	3/16	4.76	3/16	4.76	1 1/2	38.10
5/16	7.94	5/8	15.87	1	25.40	1 3/8	1 3/8	3/16	4.76	3/16	4.76	1 1/2	38.10
5/16	7.94	5/8	15.87	1 1/8	28.57	1 3/8	1 3/8	3/16	4.76	3/16	4.76	1 1/2	38.10
11/32	8.73	5/8	15.87	25/32	19.84	1 3/8	1 3/8	3/16	4.76	3/16	4.76	1 1/2	38.10
11/32	8.73	5/8	15.87	13/16	20.64	1 3/8	1 3/8	3/16	4.76	3/16	4.76	1 1/2	38.10
11/32	8.73	5/8	15.87	27/32	21.43	1 3/8	1 3/8	3/16	4.76	3/16	4.76	1 1/2	38.10
11/32	8.73	5/8	15.87	7/8	22.22	1 3/8	1 3/8	3/16	4.76	3/16	4.76	1 1/2	38.10
11/32	8.73	5/8	15.87	29/32	23.02	1 3/8	1 3/8	3/16	4.76	3/16	4.76	1 1/2	38.10
11/32	8.73	5/8	15.87	15/16	23.81	1 3/8	1 3/8	3/16	4.76	3/16	4.76	1 1/2	38.10
11/32	8.73	5/8	15.87	31/32	24.61	1 3/8	1 3/8	3/16	4.76	3/16	4.76	1 1/2	38.10
11/32	8.73	5/8	15.87	1	25.40	1 3/8	1 3/8	3/16	4.76	3/16	4.76	1 1/2	38.10
11/32	8.73	5/8	15.87	1 1/8	28.57	1 3/8	1 3/8	3/16	4.76	3/16	4.76	1 1/2	38.10
3/8	9.52	5/8	15.87	25/32	19.84	1 3/8	1 3/8	3/16	4.76	3/16	4.76	1 1/2	38.10
3/8	9.52	5/8	15.87	13/16	20.64	1 3/8	1 3/8	3/16	4.76	3/16	4.76	1 1/2	38.10
3/8	9.52	5/8	15.87	27/32	21.43	1 3/8	1 3/8	3/16	4.76	3/16	4.76	1 1/2	38.10
3/8	9.52	5/8	15.87	7/8	22.22	1 3/8	1 3/8	3/16	4.76	3/16	4.76	1 1/2	38.10
3/8	9.52	5/8	15.87	29/32	23.02	1 3/8	1 3/8	3/16	4.76	3/16	4.76	1 1/2	38.10
3/8	9.52	5/8	15.87	15/16	23.81	1 3/8	1 3/8	3/16	4.76	3/16	4.76	1 1/2	38.10
3/8	9.52	5/8	15.87	31/32	24.61	1 3/8	1 3/8	3/16	4.76	3/16	4.76	1 1/2	38.10
3/8	9.52	5/8	15.87	1	25.40	1 3/8	1 3/8	3/16	4.76	3/16	4.76	1 1/2	38.10
3/8	9.52	5/8	15.87	1 1/8	28.57	1 3/8	1 3/8	3/16	4.76	3/16	4.76	1 1/2	38.10
13/32	10.32	5/8	15.87	25/32	19.84	1 3/8	1 3/8	3/16	4.76	3/16	4.76	1 1/2	38.10
13/32	10.32	5/8	15.87	13/16	20.64	1 3/8	1 3/8	3/16	4.76	3/16	4.76	1 1/2	38.10
13/32	10.32	5/8	15.87	27/32	21.43	1 3/8	1 3/8	3/16	4.76	3/16	4.76	1 1/2	38.10
13/32	10.32	5/8	15.87	7/8	22.22	1 3/8	1 3/8	3/16	4.76	3/16	4.76	1 1/2	38.10
13/32	10.32	5/8	15.87	29/32	23.02	1 3/8	1 3/8	3/16	4.76	3/16	4.76	1 1/2	38.10
13/32	10.32	5/8	15.87	15/16	23.81	1 3/8	1 3/8	3/16	4.76	3/16	4.76	1 1/2	38.10
13/32	10.32	5/8	15.87	31/32	24.61	1 3/8	1 3/8	3/16	4.76	3/16	4.76	1 1/2	38.10
13/32	10.32	5/8	15.87	1	25.40	1 3/8	1 3/8	3/16	4.76	3/16	4.76	1 1/2	38.10

www.globaltungsteels.com

B		E		D		M	A	L		T		C	
inch	mm	inch	mm	inch	mm	inch	inch	inch	mm	inch	mm	inch	mm
13/32	10.32	5/8	15.87	1 1/8	28.57	1 3/8	1 3/8	3/16	4.76	3/16	4.76	1 1/2	38.10
7/16	11.11	5/8	15.87	25/32	19.84	1 3/8	1 3/8	3/16	4.76	3/16	4.76	1 1/2	38.10
7/16	11.11	5/8	15.87	13/16	20.64	1 3/8	1 3/8	3/16	4.76	3/16	4.76	1 1/2	38.10
7/16	11.11	5/8	15.87	27/32	21.43	1 3/8	1 3/8	3/16	4.76	3/16	4.76	1 1/2	38.10
7/16	11.11	5/8	15.87	7/8	22.22	1 3/8	1 3/8	3/16	4.76	3/16	4.76	1 1/2	38.10
7/16	11.11	5/8	15.87	29/32	23.02	1 3/8	1 3/8	3/16	4.76	3/16	4.76	1 1/2	38.10
7/16	11.11	5/8	15.87	15/16	23.81	1 3/8	1 3/8	3/16	4.76	3/16	4.76	1 1/2	38.10
7/16	11.11	5/8	15.87	31/32	24.61	1 3/8	1 3/8	3/16	4.76	3/16	4.76	1 1/2	38.10
7/16	11.11	5/8	15.87	1	25.40	1 3/8	1 3/8	3/16	4.76	3/16	4.76	1 1/2	38.10
7/16	11.11	5/8	15.87	1 1/8	28.57	1 3/8	1 3/8	3/16	4.76	3/16	4.76	1 1/2	38.10
15/32	11.91	5/8	15.87	25/32	19.84	1 3/8	1 3/8	3/16	4.76	3/16	4.76	1 1/2	38.10
15/32	11.91	5/8	15.87	13/16	20.64	1 3/8	1 3/8	3/16	4.76	3/16	4.76	1 1/2	38.10
15/32	11.91	5/8	15.87	27/32	21.43	1 3/8	1 3/8	3/16	4.76	3/16	4.76	1 1/2	38.10
15/32	11.91	5/8	15.87	7/8	22.22	1 3/8	1 3/8	3/16	4.76	3/16	4.76	1 1/2	38.10
15/32	11.91	5/8	15.87	29/32	23.02	1 3/8	1 3/8	3/16	4.76	3/16	4.76	1 1/2	38.10
15/32	11.91	5/8	15.87	15/16	23.81	1 3/8	1 3/8	3/16	4.76	3/16	4.76	1 1/2	38.10
15/32	11.91	5/8	15.87	31/32	24.61	1 3/8	1 3/8	3/16	4.76	3/16	4.76	1 1/2	38.10
15/32	11.91	5/8	15.87	1	25.40	1 3/8	1 3/8	3/16	4.76	3/16	4.76	1 1/2	38.10
15/32	11.91	5/8	15.87	1 1/8	28.57	1 3/8	1 3/8	3/16	4.76	3/16	4.76	1 1/2	38.10
1/2	12.70	5/8	15.87	25/32	19.84	1 3/8	1 3/8	3/16	4.76	3/16	4.76	1 1/2	38.10
1/2	12.70	5/8	15.87	13/16	20.64	1 3/8	1 3/8	3/16	4.76	3/16	4.76	1 1/2	38.10
1/2	12.70	5/8	15.87	27/32	21.43	1 3/8	1 3/8	3/16	4.76	3/16	4.76	1 1/2	38.10
1/2	12.70	5/8	15.87	7/8	22.22	1 3/8	1 3/8	3/16	4.76	3/16	4.76	1 1/2	38.10
1/2	12.70	5/8	15.87	29/32	23.02	1 3/8	1 3/8	3/16	4.76	3/16	4.76	1 1/2	38.10
1/2	12.70	5/8	15.87	15/16	23.81	1 3/8	1 3/8	3/16	4.76	3/16	4.76	1 1/2	38.10
1/2	12.70	5/8	15.87	31/32	24.61	1 3/8	1 3/8	3/16	4.76	3/16	4.76	1 1/2	38.10
1/2	12.70	5/8	15.87	1	25.40	1 3/8	1 3/8	3/16	4.76	3/16	4.76	1 1/2	38.10
1/2	12.70	5/8	15.87	1 1/8	28.57	1 3/8	1 3/8	3/16	4.76	3/16	4.76	1 1/2	38.10
17/32	13.49	5/8	15.87	25/32	19.84	1 3/8	1 3/8	3/16	4.76	3/16	4.76	1 1/2	38.10
17/32	13.49	5/8	15.87	13/16	20.64	1 3/8	1 3/8	3/16	4.76	3/16	4.76	1 1/2	38.10
17/32	13.49	5/8	15.87	27/32	21.43	1 3/8	1 3/8	3/16	4.76	3/16	4.76	1 1/2	38.10
17/32	13.49	5/8	15.87	7/8	22.22	1 3/8	1 3/8	3/16	4.76	3/16	4.76	1 1/2	38.10
17/32	13.49	5/8	15.87	29/32	23.02	1 3/8	1 3/8	3/16	4.76	3/16	4.76	1 1/2	38.10
17/32	13.49	5/8	15.87	15/16	23.81	1 3/8	1 3/8	3/16	4.76	3/16	4.76	1 1/2	38.10
17/32	13.49	5/8	15.87	31/32	24.61	1 3/8	1 3/8	3/16	4.76	3/16	4.76	1 1/2	38.10
17/32	13.49	5/8	15.87	1	25.40	1 3/8	1 3/8	3/16	4.76	3/16	4.76	1 1/2	38.10
17/32	13.49	5/8	15.87	1 1/8	28.57	1 3/8	1 3/8	3/16	4.76	3/16	4.76	1 1/2	38.10
9/16	14.29	5/8	15.87	25/32	19.84	1 3/8	1 3/8	3/16	4.76	3/16	4.76	1 1/2	38.10
9/16	14.29	5/8	15.87	13/16	20.64	1 3/8	1 3/8	3/16	4.76	3/16	4.76	1 1/2	38.10
9/16	14.29	5/8	15.87	27/32	21.43	1 3/8	1 3/8	3/16	4.76	3/16	4.76	1 1/2	38.10
9/16	14.29	5/8	15.87	7/8	22.22	1 3/8	1 3/8	3/16	4.76	3/16	4.76	1 1/2	38.10
9/16	14.29	5/8	15.87	29/32	23.02	1 3/8	1 3/8	3/16	4.76	3/16	4.76	1 1/2	38.10
9/16	14.29	5/8	15.87	15/16	23.81	1 3/8	1 3/8	3/16	4.76	3/16	4.76	1 1/2	38.10
9/16	14.29	5/8	15.87	31/32	24.61	1 3/8	1 3/8	3/16	4.76	3/16	4.76	1 1/2	38.10
9/16	14.29	5/8	15.87	1	25.40	1 3/8	1 3/8	3/16	4.76	3/16	4.76	1 1/2	38.10

www.globaltungsten.com

B		E		D		M	A	L		T		C	
inch	mm	inch	mm	inch	mm	inch	inch	inch	mm	inch	mm	inch	mm
9/16	14.29	5/8	15.87	1 1/8	28.57	1 3/8	1 3/8	3/16	4.76	3/16	4.76	1 1/2	38.10
19/32	15.08	5/8	15.87	25/32	19.84	1 3/8	1 3/8	3/16	4.76	3/16	4.76	1 1/2	38.10
19/32	15.08	5/8	15.87	13/16	20.64	1 3/8	1 3/8	3/16	4.76	3/16	4.76	1 1/2	38.10
19/32	15.08	5/8	15.87	27/32	21.43	1 3/8	1 3/8	3/16	4.76	3/16	4.76	1 1/2	38.10
19/32	15.08	5/8	15.87	7/8	22.22	1 3/8	1 3/8	3/16	4.76	3/16	4.76	1 1/2	38.10
19/32	15.08	5/8	15.87	29/32	23.02	1 3/8	1 3/8	3/16	4.76	3/16	4.76	1 1/2	38.10
19/32	15.08	5/8	15.87	15/16	23.81	1 3/8	1 3/8	3/16	4.76	3/16	4.76	1 1/2	38.10
19/32	15.08	5/8	15.87	31/32	24.61	1 3/8	1 3/8	3/16	4.76	3/16	4.76	1 1/2	38.10
19/32	15.08	5/8	15.87	1	25.40	1 3/8	1 3/8	3/16	4.76	3/16	4.76	1 1/2	38.10
19/32	15.08	5/8	15.87	1 1/8	28.57	1 3/8	1 3/8	3/16	4.76	3/16	4.76	1 1/2	38.10
5/8	15.87	5/8	15.87	25/32	19.84	1 3/8	1 3/8	3/16	4.76	3/16	4.76	1 1/2	38.10
5/8	15.87	5/8	15.87	13/16	20.64	1 3/8	1 3/8	3/16	4.76	3/16	4.76	1 1/2	38.10
5/8	15.87	5/8	15.87	27/32	21.43	1 3/8	1 3/8	3/16	4.76	3/16	4.76	1 1/2	38.10
5/8	15.87	5/8	15.87	7/8	22.22	1 3/8	1 3/8	3/16	4.76	3/16	4.76	1 1/2	38.10
5/8	15.87	5/8	15.87	29/32	23.02	1 3/8	1 3/8	3/16	4.76	3/16	4.76	1 1/2	38.10
5/8	15.87	5/8	15.87	15/16	23.81	1 3/8	1 3/8	3/16	4.76	3/16	4.76	1 1/2	38.10
5/8	15.87	5/8	15.87	31/32	24.61	1 3/8	1 3/8	3/16	4.76	3/16	4.76	1 1/2	38.10
5/8	15.87	5/8	15.87	1	25.40	1 3/8	1 3/8	3/16	4.76	3/16	4.76	1 1/2	38.10
5/8	15.87	5/8	15.87	1 1/8	28.57	1 3/8	1 3/8	3/16	4.76	3/16	4.76	1 1/2	38.10
3/16	4.76	1/2	12.70	21/32	16.67	1 3/8	1 3/8	3/16	4.76	3/16	4.76	1 1/2	38.10
3/16	4.76	1/2	12.70	11/16	17.46	1 3/8	1 3/8	3/16	4.76	3/16	4.76	1 1/2	38.10
3/16	4.76	1/2	12.70	23/32	18.26	1 3/8	1 3/8	3/16	4.76	3/16	4.76	1 1/2	38.10
3/16	4.76	1/2	12.70	3/4	19.05	1 3/8	1 3/8	3/16	4.76	3/16	4.76	1 1/2	38.10
3/16	4.76	1/2	12.70	25/32	19.84	1 3/8	1 3/8	3/16	4.76	3/16	4.76	1 1/2	38.10
3/16	4.76	1/2	12.70	13/16	20.64	1 3/8	1 3/8	3/16	4.76	3/16	4.76	1 1/2	38.10
3/16	4.76	1/2	12.70	27/32	21.43	1 3/8	1 3/8	3/16	4.76	3/16	4.76	1 1/2	38.10
3/16	4.76	1/2	12.70	7/8	22.22	1 3/8	1 3/8	3/16	4.76	3/16	4.76	1 1/2	38.10
3/16	4.76	1/2	12.70	29/32	23.02	1 3/8	1 3/8	3/16	4.76	3/16	4.76	1 1/2	38.10
3/16	4.76	1/2	12.70	15/16	23.81	1 3/8	1 3/8	3/16	4.76	3/16	4.76	1 1/2	38.10
3/16	4.76	1/2	12.70	31/32	24.61	1 3/8	1 3/8	3/16	4.76	3/16	4.76	1 1/2	38.10
3/16	4.76	1/2	12.70	1	25.40	1 3/8	1 3/8	3/16	4.76	3/16	4.76	1 1/2	38.10
3/16	4.76	1/2	12.70	1 1/8	28.57	1 3/8	1 3/8	3/16	4.76	3/16	4.76	1 1/2	38.10
7/32	5.56	1/2	12.70	21/32	16.67	1 3/8	1 3/8	3/16	4.76	3/16	4.76	1 1/2	38.10
7/32	5.56	1/2	12.70	11/16	17.46	1 3/8	1 3/8	3/16	4.76	3/16	4.76	1 1/2	38.10
7/32	5.56	1/2	12.70	23/32	18.26	1 3/8	1 3/8	3/16	4.76	3/16	4.76	1 1/2	38.10
7/32	5.56	1/2	12.70	3/4	19.05	1 3/8	1 3/8	3/16	4.76	3/16	4.76	1 1/2	38.10
7/32	5.56	1/2	12.70	25/32	19.84	1 3/8	1 3/8	3/16	4.76	3/16	4.76	1 1/2	38.10
7/32	5.56	1/2	12.70	13/16	20.64	1 3/8	1 3/8	3/16	4.76	3/16	4.76	1 1/2	38.10
7/32	5.56	1/2	12.70	27/32	21.43	1 3/8	1 3/8	3/16	4.76	3/16	4.76	1 1/2	38.10
7/32	5.56	1/2	12.70	7/8	22.22	1 3/8	1 3/8	3/16	4.76	3/16	4.76	1 1/2	38.10
7/32	5.56	1/2	12.70	29/32	23.02	1 3/8	1 3/8	3/16	4.76	3/16	4.76	1 1/2	38.10
7/32	5.56	1/2	12.70	15/16	23.81	1 3/8	1 3/8	3/16	4.76	3/16	4.76	1 1/2	38.10
7/32	5.56	1/2	12.70	31/32	24.61	1 3/8	1 3/8	3/16	4.76	3/16	4.76	1 1/2	38.10
7/32	5.56	1/2	12.70	1	25.40	1 3/8	1 3/8	3/16	4.76	3/16	4.76	1 1/2	38.10
7/32	5.56	1/2	12.70	1 1/8	28.57	1 3/8	1 3/8	3/16	4.76	3/16	4.76	1 1/2	38.10

www.globaltungsten.com

B		E		D		M	A	L		T		C	
inch	mm	inch	mm	inch	mm	inch	inch	inch	mm	inch	mm	inch	mm
1/4	6.35	1/2	12.70	21/32	16.67	1 3/8	1 3/8	3/16	4.76	3/16	4.76	1 1/2	38.10
1/4	6.35	1/2	12.70	11/16	17.46	1 3/8	1 3/8	3/16	4.76	3/16	4.76	1 1/2	38.10
1/4	6.35	1/2	12.70	23/32	18.26	1 3/8	1 3/8	3/16	4.76	3/16	4.76	1 1/2	38.10
1/4	6.35	1/2	12.70	3/4	19.05	1 3/8	1 3/8	3/16	4.76	3/16	4.76	1 1/2	38.10
1/4	6.35	1/2	12.70	25/32	19.84	1 3/8	1 3/8	3/16	4.76	3/16	4.76	1 1/2	38.10
1/4	6.35	1/2	12.70	13/16	20.64	1 3/8	1 3/8	3/16	4.76	3/16	4.76	1 1/2	38.10
1/4	6.35	1/2	12.70	27/32	21.43	1 3/8	1 3/8	3/16	4.76	3/16	4.76	1 1/2	38.10
1/4	6.35	1/2	12.70	7/8	22.22	1 3/8	1 3/8	3/16	4.76	3/16	4.76	1 1/2	38.10
1/4	6.35	1/2	12.70	29/32	23.02	1 3/8	1 3/8	3/16	4.76	3/16	4.76	1 1/2	38.10
1/4	6.35	1/2	12.70	15/16	23.81	1 3/8	1 3/8	3/16	4.76	3/16	4.76	1 1/2	38.10
1/4	6.35	1/2	12.70	31/32	24.61	1 3/8	1 3/8	3/16	4.76	3/16	4.76	1 1/2	38.10
1/4	6.35	1/2	12.70	1	25.40	1 3/8	1 3/8	3/16	4.76	3/16	4.76	1 1/2	38.10
1/4	6.35	1/2	12.70	1 1/8	28.57	1 3/8	1 3/8	3/16	4.76	3/16	4.76	1 1/2	38.10
9/32	7.14	1/2	12.70	21/32	16.67	1 3/8	1 3/8	3/16	4.76	3/16	4.76	1 1/2	38.10
9/32	7.14	1/2	12.70	11/16	17.46	1 3/8	1 3/8	3/16	4.76	3/16	4.76	1 1/2	38.10
9/32	7.14	1/2	12.70	23/32	18.26	1 3/8	1 3/8	3/16	4.76	3/16	4.76	1 1/2	38.10
9/32	7.14	1/2	12.70	3/4	19.05	1 3/8	1 3/8	3/16	4.76	3/16	4.76	1 1/2	38.10
9/32	7.14	1/2	12.70	25/32	19.84	1 3/8	1 3/8	3/16	4.76	3/16	4.76	1 1/2	38.10
9/32	7.14	1/2	12.70	13/16	20.64	1 3/8	1 3/8	3/16	4.76	3/16	4.76	1 1/2	38.10
9/32	7.14	1/2	12.70	27/32	21.43	1 3/8	1 3/8	3/16	4.76	3/16	4.76	1 1/2	38.10
9/32	7.14	1/2	12.70	7/8	22.22	1 3/8	1 3/8	3/16	4.76	3/16	4.76	1 1/2	38.10
9/32	7.14	1/2	12.70	29/32	23.02	1 3/8	1 3/8	3/16	4.76	3/16	4.76	1 1/2	38.10
9/32	7.14	1/2	12.70	15/16	23.81	1 3/8	1 3/8	3/16	4.76	3/16	4.76	1 1/2	38.10
9/32	7.14	1/2	12.70	31/32	24.61	1 3/8	1 3/8	3/16	4.76	3/16	4.76	1 1/2	38.10
9/32	7.14	1/2	12.70	1	25.40	1 3/8	1 3/8	3/16	4.76	3/16	4.76	1 1/2	38.10
9/32	7.14	1/2	12.70	1 1/8	28.57	1 3/8	1 3/8	3/16	4.76	3/16	4.76	1 1/2	38.10
5/16	7.94	1/2	12.70	21/32	16.67	1 3/8	1 3/8	3/16	4.76	3/16	4.76	1 1/2	38.10
5/16	7.94	1/2	12.70	11/16	17.46	1 3/8	1 3/8	3/16	4.76	3/16	4.76	1 1/2	38.10
5/16	7.94	1/2	12.70	23/32	18.26	1 3/8	1 3/8	3/16	4.76	3/16	4.76	1 1/2	38.10
5/16	7.94	1/2	12.70	3/4	19.05	1 3/8	1 3/8	3/16	4.76	3/16	4.76	1 1/2	38.10
5/16	7.94	1/2	12.70	25/32	19.84	1 3/8	1 3/8	3/16	4.76	3/16	4.76	1 1/2	38.10
5/16	7.94	1/2	12.70	13/16	20.64	1 3/8	1 3/8	3/16	4.76	3/16	4.76	1 1/2	38.10
5/16	7.94	1/2	12.70	27/32	21.43	1 3/8	1 3/8	3/16	4.76	3/16	4.76	1 1/2	38.10
5/16	7.94	1/2	12.70	7/8	22.22	1 3/8	1 3/8	3/16	4.76	3/16	4.76	1 1/2	38.10
5/16	7.94	1/2	12.70	29/32	23.02	1 3/8	1 3/8	3/16	4.76	3/16	4.76	1 1/2	38.10
5/16	7.94	1/2	12.70	15/16	23.81	1 3/8	1 3/8	3/16	4.76	3/16	4.76	1 1/2	38.10
5/16	7.94	1/2	12.70	31/32	24.61	1 3/8	1 3/8	3/16	4.76	3/16	4.76	1 1/2	38.10
5/16	7.94	1/2	12.70	1	25.40	1 3/8	1 3/8	3/16	4.76	3/16	4.76	1 1/2	38.10
5/16	7.94	1/2	12.70	1 1/8	28.57	1 3/8	1 3/8	3/16	4.76	3/16	4.76	1 1/2	38.10
11/32	8.73	1/2	12.70	21/32	16.67	1 3/8	1 3/8	3/16	4.76	3/16	4.76	1 1/2	38.10
11/32	8.73	1/2	12.70	11/16	17.46	1 3/8	1 3/8	3/16	4.76	3/16	4.76	1 1/2	38.10
11/32	8.73	1/2	12.70	23/32	18.26	1 3/8	1 3/8	3/16	4.76	3/16	4.76	1 1/2	38.10
11/32	8.73	1/2	12.70	3/4	19.05	1 3/8	1 3/8	3/16	4.76	3/16	4.76	1 1/2	38.10
11/32	8.73	1/2	12.70	25/32	19.84	1 3/8	1 3/8	3/16	4.76	3/16	4.76	1 1/2	38.10
11/32	8.73	1/2	12.70	13/16	20.64	1 3/8	1 3/8	3/16	4.76	3/16	4.76	1 1/2	38.10

www.globaltungsten.com

B		E		D		M	A	L		T		C	
inch	mm	inch	mm	inch	mm	inch	inch	inch	mm	inch	mm	inch	mm
11/32	8.73	1/2	12.70	27/32	21.43	1 3/8	1 3/8	3/16	4.76	3/16	4.76	1 1/2	38.10
11/32	8.73	1/2	12.70	7/8	22.22	1 3/8	1 3/8	3/16	4.76	3/16	4.76	1 1/2	38.10
11/32	8.73	1/2	12.70	29/32	23.02	1 3/8	1 3/8	3/16	4.76	3/16	4.76	1 1/2	38.10
11/32	8.73	1/2	12.70	15/16	23.81	1 3/8	1 3/8	3/16	4.76	3/16	4.76	1 1/2	38.10
11/32	8.73	1/2	12.70	31/32	24.61	1 3/8	1 3/8	3/16	4.76	3/16	4.76	1 1/2	38.10
11/32	8.73	1/2	12.70	1	25.40	1 3/8	1 3/8	3/16	4.76	3/16	4.76	1 1/2	38.10
11/32	8.73	1/2	12.70	1 1/8	28.57	1 3/8	1 3/8	3/16	4.76	3/16	4.76	1 1/2	38.10
3/8	9.52	1/2	12.70	21/32	16.67	1 3/8	1 3/8	3/16	4.76	3/16	4.76	1 1/2	38.10
3/8	9.52	1/2	12.70	11/16	17.46	1 3/8	1 3/8	3/16	4.76	3/16	4.76	1 1/2	38.10
3/8	9.52	1/2	12.70	23/32	18.26	1 3/8	1 3/8	3/16	4.76	3/16	4.76	1 1/2	38.10
3/8	9.52	1/2	12.70	3/4	19.05	1 3/8	1 3/8	3/16	4.76	3/16	4.76	1 1/2	38.10
3/8	9.52	1/2	12.70	25/32	19.84	1 3/8	1 3/8	3/16	4.76	3/16	4.76	1 1/2	38.10
3/8	9.52	1/2	12.70	13/16	20.64	1 3/8	1 3/8	3/16	4.76	3/16	4.76	1 1/2	38.10
3/8	9.52	1/2	12.70	27/32	21.43	1 3/8	1 3/8	3/16	4.76	3/16	4.76	1 1/2	38.10
3/8	9.52	1/2	12.70	7/8	22.22	1 3/8	1 3/8	3/16	4.76	3/16	4.76	1 1/2	38.10
3/8	9.52	1/2	12.70	29/32	23.02	1 3/8	1 3/8	3/16	4.76	3/16	4.76	1 1/2	38.10
3/8	9.52	1/2	12.70	15/16	23.81	1 3/8	1 3/8	3/16	4.76	3/16	4.76	1 1/2	38.10
3/8	9.52	1/2	12.70	31/32	24.61	1 3/8	1 3/8	3/16	4.76	3/16	4.76	1 1/2	38.10
3/8	9.52	1/2	12.70	1	25.40	1 3/8	1 3/8	3/16	4.76	3/16	4.76	1 1/2	38.10
3/8	9.52	1/2	12.70	1 1/8	28.57	1 3/8	1 3/8	3/16	4.76	3/16	4.76	1 1/2	38.10
13/32	10.32	1/2	12.70	21/32	16.67	1 3/8	1 3/8	3/16	4.76	3/16	4.76	1 1/2	38.10
13/32	10.32	1/2	12.70	11/16	17.46	1 3/8	1 3/8	3/16	4.76	3/16	4.76	1 1/2	38.10
13/32	10.32	1/2	12.70	23/32	18.26	1 3/8	1 3/8	3/16	4.76	3/16	4.76	1 1/2	38.10
13/32	10.32	1/2	12.70	3/4	19.05	1 3/8	1 3/8	3/16	4.76	3/16	4.76	1 1/2	38.10
13/32	10.32	1/2	12.70	25/32	19.84	1 3/8	1 3/8	3/16	4.76	3/16	4.76	1 1/2	38.10
13/32	10.32	1/2	12.70	13/16	20.64	1 3/8	1 3/8	3/16	4.76	3/16	4.76	1 1/2	38.10
13/32	10.32	1/2	12.70	27/32	21.43	1 3/8	1 3/8	3/16	4.76	3/16	4.76	1 1/2	38.10
13/32	10.32	1/2	12.70	7/8	22.22	1 3/8	1 3/8	3/16	4.76	3/16	4.76	1 1/2	38.10
13/32	10.32	1/2	12.70	29/32	23.02	1 3/8	1 3/8	3/16	4.76	3/16	4.76	1 1/2	38.10
13/32	10.32	1/2	12.70	15/16	23.81	1 3/8	1 3/8	3/16	4.76	3/16	4.76	1 1/2	38.10
13/32	10.32	1/2	12.70	31/32	24.61	1 3/8	1 3/8	3/16	4.76	3/16	4.76	1 1/2	38.10
13/32	10.32	1/2	12.70	1	25.40	1 3/8	1 3/8	3/16	4.76	3/16	4.76	1 1/2	38.10
13/32	10.32	1/2	12.70	1 1/8	28.57	1 3/8	1 3/8	3/16	4.76	3/16	4.76	1 1/2	38.10
7/16	11.11	1/2	12.70	21/32	16.67	1 3/8	1 3/8	3/16	4.76	3/16	4.76	1 1/2	38.10
7/16	11.11	1/2	12.70	11/16	17.46	1 3/8	1 3/8	3/16	4.76	3/16	4.76	1 1/2	38.10
7/16	11.11	1/2	12.70	23/32	18.26	1 3/8	1 3/8	3/16	4.76	3/16	4.76	1 1/2	38.10
7/16	11.11	1/2	12.70	3/4	19.05	1 3/8	1 3/8	3/16	4.76	3/16	4.76	1 1/2	38.10
7/16	11.11	1/2	12.70	25/32	19.84	1 3/8	1 3/8	3/16	4.76	3/16	4.76	1 1/2	38.10
7/16	11.11	1/2	12.70	13/16	20.64	1 3/8	1 3/8	3/16	4.76	3/16	4.76	1 1/2	38.10
7/16	11.11	1/2	12.70	27/32	21.43	1 3/8	1 3/8	3/16	4.76	3/16	4.76	1 1/2	38.10
7/16	11.11	1/2	12.70	7/8	22.22	1 3/8	1 3/8	3/16	4.76	3/16	4.76	1 1/2	38.10
7/16	11.11	1/2	12.70	29/32	23.02	1 3/8	1 3/8	3/16	4.76	3/16	4.76	1 1/2	38.10
7/16	11.11	1/2	12.70	15/16	23.81	1 3/8	1 3/8	3/16	4.76	3/16	4.76	1 1/2	38.10
7/16	11.11	1/2	12.70	31/32	24.61	1 3/8	1 3/8	3/16	4.76	3/16	4.76	1 1/2	38.10
7/16	11.11	1/2	12.70	1	25.40	1 3/8	1 3/8	3/16	4.76	3/16	4.76	1 1/2	38.10

www.globaltungsten.com

B		E		D		M	A	L		T		C	
inch	mm	inch	mm	inch	mm	inch	inch	inch	mm	inch	mm	inch	mm
7/16	11.11	1/2	12.70	1 1/8	28.57	1 3/8	1 3/8	3/16	4.76	3/16	4.76	1 1/2	38.10
15/32	11.91	1/2	12.70	21/32	16.67	1 3/8	1 3/8	3/16	4.76	3/16	4.76	1 1/2	38.10
15/32	11.91	1/2	12.70	11/16	17.46	1 3/8	1 3/8	3/16	4.76	3/16	4.76	1 1/2	38.10
15/32	11.91	1/2	12.70	23/32	18.26	1 3/8	1 3/8	3/16	4.76	3/16	4.76	1 1/2	38.10
15/32	11.91	1/2	12.70	3/4	19.05	1 3/8	1 3/8	3/16	4.76	3/16	4.76	1 1/2	38.10
15/32	11.91	1/2	12.70	25/32	19.84	1 3/8	1 3/8	3/16	4.76	3/16	4.76	1 1/2	38.10
15/32	11.91	1/2	12.70	13/16	20.64	1 3/8	1 3/8	3/16	4.76	3/16	4.76	1 1/2	38.10
15/32	11.91	1/2	12.70	27/32	21.43	1 3/8	1 3/8	3/16	4.76	3/16	4.76	1 1/2	38.10
15/32	11.91	1/2	12.70	7/8	22.22	1 3/8	1 3/8	3/16	4.76	3/16	4.76	1 1/2	38.10
15/32	11.91	1/2	12.70	29/32	23.02	1 3/8	1 3/8	3/16	4.76	3/16	4.76	1 1/2	38.10
15/32	11.91	1/2	12.70	15/16	23.81	1 3/8	1 3/8	3/16	4.76	3/16	4.76	1 1/2	38.10
15/32	11.91	1/2	12.70	31/32	24.61	1 3/8	1 3/8	3/16	4.76	3/16	4.76	1 1/2	38.10
15/32	11.91	1/2	12.70	1	25.40	1 3/8	1 3/8	3/16	4.76	3/16	4.76	1 1/2	38.10
15/32	11.91	1/2	12.70	1 1/8	28.57	1 3/8	1 3/8	3/16	4.76	3/16	4.76	1 1/2	38.10
1/2	12.70	1/2	12.70	21/32	16.67	1 3/8	1 3/8	3/16	4.76	3/16	4.76	1 1/2	38.10
1/2	12.70	1/2	12.70	11/16	17.46	1 3/8	1 3/8	3/16	4.76	3/16	4.76	1 1/2	38.10
1/2	12.70	1/2	12.70	23/32	18.26	1 3/8	1 3/8	3/16	4.76	3/16	4.76	1 1/2	38.10
1/2	12.70	1/2	12.70	3/4	19.05	1 3/8	1 3/8	3/16	4.76	3/16	4.76	1 1/2	38.10
1/2	12.70	1/2	12.70	25/32	19.84	1 3/8	1 3/8	3/16	4.76	3/16	4.76	1 1/2	38.10
1/2	12.70	1/2	12.70	13/16	20.64	1 3/8	1 3/8	3/16	4.76	3/16	4.76	1 1/2	38.10
1/2	12.70	1/2	12.70	27/32	21.43	1 3/8	1 3/8	3/16	4.76	3/16	4.76	1 1/2	38.10
1/2	12.70	1/2	12.70	7/8	22.22	1 3/8	1 3/8	3/16	4.76	3/16	4.76	1 1/2	38.10
1/2	12.70	1/2	12.70	29/32	23.02	1 3/8	1 3/8	3/16	4.76	3/16	4.76	1 1/2	38.10
1/2	12.70	1/2	12.70	15/16	23.81	1 3/8	1 3/8	3/16	4.76	3/16	4.76	1 1/2	38.10
1/2	12.70	1/2	12.70	31/32	24.61	1 3/8	1 3/8	3/16	4.76	3/16	4.76	1 1/2	38.10
1/2	12.70	1/2	12.70	1	25.40	1 3/8	1 3/8	3/16	4.76	3/16	4.76	1 1/2	38.10
1/2	12.70	1/2	12.70	1 1/8	28.57	1 3/8	1 3/8	3/16	4.76	3/16	4.76	1 1/2	38.10
3/16	4.76	3/8	9.52	19/32	15.08	1 3/8	1 3/8	3/16	4.76	3/16	4.76	1 1/2	38.10
3/16	4.76	3/8	9.52	5/8	15.87	1 3/8	1 3/8	3/16	4.76	3/16	4.76	1 1/2	38.10
3/16	4.76	3/8	9.52	21/32	16.67	1 3/8	1 3/8	3/16	4.76	3/16	4.76	1 1/2	38.10
3/16	4.76	3/8	9.52	11/16	17.46	1 3/8	1 3/8	3/16	4.76	3/16	4.76	1 1/2	38.10
3/16	4.76	3/8	9.52	23/32	18.26	1 3/8	1 3/8	3/16	4.76	3/16	4.76	1 1/2	38.10
3/16	4.76	3/8	9.52	3/4	19.05	1 3/8	1 3/8	3/16	4.76	3/16	4.76	1 1/2	38.10
3/16	4.76	3/8	9.52	25/32	19.84	1 3/8	1 3/8	3/16	4.76	3/16	4.76	1 1/2	38.10
3/16	4.76	3/8	9.52	13/16	20.64	1 3/8	1 3/8	3/16	4.76	3/16	4.76	1 1/2	38.10
3/16	4.76	3/8	9.52	27/32	21.43	1 3/8	1 3/8	3/16	4.76	3/16	4.76	1 1/2	38.10
3/16	4.76	3/8	9.52	7/8	22.22	1 3/8	1 3/8	3/16	4.76	3/16	4.76	1 1/2	38.10
3/16	4.76	3/8	9.52	29/32	23.02	1 3/8	1 3/8	3/16	4.76	3/16	4.76	1 1/2	38.10
3/16	4.76	3/8	9.52	15/16	23.81	1 3/8	1 3/8	3/16	4.76	3/16	4.76	1 1/2	38.10
3/16	4.76	3/8	9.52	31/32	24.61	1 3/8	1 3/8	3/16	4.76	3/16	4.76	1 1/2	38.10
3/16	4.76	3/8	9.52	1	25.40	1 3/8	1 3/8	3/16	4.76	3/16	4.76	1 1/2	38.10
3/16	4.76	3/8	9.52	1 1/8	28.57	1 3/8	1 3/8	3/16	4.76	3/16	4.76	1 1/2	38.10
7/32	5.56	3/8	9.52	19/32	15.08	1 3/8	1 3/8	3/16	4.76	3/16	4.76	1 1/2	38.10
7/32	5.56	3/8	9.52	5/8	15.87	1 3/8	1 3/8	3/16	4.76	3/16	4.76	1 1/2	38.10
7/32	5.56	3/8	9.52	21/32	16.67	1 3/8	1 3/8	3/16	4.76	3/16	4.76	1 1/2	38.10

www.globaltungsteins.com

B		E		D		M	A	L		T		C	
inch	mm	inch	mm	inch	mm	inch	inch	inch	mm	inch	mm	inch	mm
7/32	5.56	3/8	9.52	11/16	17.46	1 3/8	1 3/8	3/16	4.76	3/16	4.76	1 1/2	38.10
7/32	5.56	3/8	9.52	23/32	18.26	1 3/8	1 3/8	3/16	4.76	3/16	4.76	1 1/2	38.10
7/32	5.56	3/8	9.52	3/4	19.05	1 3/8	1 3/8	3/16	4.76	3/16	4.76	1 1/2	38.10
7/32	5.56	3/8	9.52	25/32	19.84	1 3/8	1 3/8	3/16	4.76	3/16	4.76	1 1/2	38.10
7/32	5.56	3/8	9.52	13/16	20.64	1 3/8	1 3/8	3/16	4.76	3/16	4.76	1 1/2	38.10
7/32	5.56	3/8	9.52	27/32	21.43	1 3/8	1 3/8	3/16	4.76	3/16	4.76	1 1/2	38.10
7/32	5.56	3/8	9.52	7/8	22.22	1 3/8	1 3/8	3/16	4.76	3/16	4.76	1 1/2	38.10
7/32	5.56	3/8	9.52	29/32	23.02	1 3/8	1 3/8	3/16	4.76	3/16	4.76	1 1/2	38.10
7/32	5.56	3/8	9.52	15/16	23.81	1 3/8	1 3/8	3/16	4.76	3/16	4.76	1 1/2	38.10
7/32	5.56	3/8	9.52	31/32	24.61	1 3/8	1 3/8	3/16	4.76	3/16	4.76	1 1/2	38.10
7/32	5.56	3/8	9.52	1	25.40	1 3/8	1 3/8	3/16	4.76	3/16	4.76	1 1/2	38.10
7/32	5.56	3/8	9.52	1 1/8	28.57	1 3/8	1 3/8	3/16	4.76	3/16	4.76	1 1/2	38.10
1/4	6.35	3/8	9.52	19/32	15.08	1 3/8	1 3/8	3/16	4.76	3/16	4.76	1 1/2	38.10
1/4	6.35	3/8	9.52	5/8	15.87	1 3/8	1 3/8	3/16	4.76	3/16	4.76	1 1/2	38.10
1/4	6.35	3/8	9.52	21/32	16.67	1 3/8	1 3/8	3/16	4.76	3/16	4.76	1 1/2	38.10
1/4	6.35	3/8	9.52	11/16	17.46	1 3/8	1 3/8	3/16	4.76	3/16	4.76	1 1/2	38.10
1/4	6.35	3/8	9.52	23/32	18.26	1 3/8	1 3/8	3/16	4.76	3/16	4.76	1 1/2	38.10
1/4	6.35	3/8	9.52	3/4	19.05	1 3/8	1 3/8	3/16	4.76	3/16	4.76	1 1/2	38.10
1/4	6.35	3/8	9.52	25/32	19.84	1 3/8	1 3/8	3/16	4.76	3/16	4.76	1 1/2	38.10
1/4	6.35	3/8	9.52	13/16	20.64	1 3/8	1 3/8	3/16	4.76	3/16	4.76	1 1/2	38.10
1/4	6.35	3/8	9.52	27/32	21.43	1 3/8	1 3/8	3/16	4.76	3/16	4.76	1 1/2	38.10
1/4	6.35	3/8	9.52	7/8	22.22	1 3/8	1 3/8	3/16	4.76	3/16	4.76	1 1/2	38.10
1/4	6.35	3/8	9.52	29/32	23.02	1 3/8	1 3/8	3/16	4.76	3/16	4.76	1 1/2	38.10
1/4	6.35	3/8	9.52	15/16	23.81	1 3/8	1 3/8	3/16	4.76	3/16	4.76	1 1/2	38.10
1/4	6.35	3/8	9.52	31/32	24.61	1 3/8	1 3/8	3/16	4.76	3/16	4.76	1 1/2	38.10
1/4	6.35	3/8	9.52	1	25.40	1 3/8	1 3/8	3/16	4.76	3/16	4.76	1 1/2	38.10
1/4	6.35	3/8	9.52	1 1/8	28.57	1 3/8	1 3/8	3/16	4.76	3/16	4.76	1 1/2	38.10
9/32	7.14	3/8	9.52	19/32	15.08	1 3/8	1 3/8	3/16	4.76	3/16	4.76	1 1/2	38.10
9/32	7.14	3/8	9.52	5/8	15.87	1 3/8	1 3/8	3/16	4.76	3/16	4.76	1 1/2	38.10
9/32	7.14	3/8	9.52	21/32	16.67	1 3/8	1 3/8	3/16	4.76	3/16	4.76	1 1/2	38.10
9/32	7.14	3/8	9.52	11/16	17.46	1 3/8	1 3/8	3/16	4.76	3/16	4.76	1 1/2	38.10
9/32	7.14	3/8	9.52	23/32	18.26	1 3/8	1 3/8	3/16	4.76	3/16	4.76	1 1/2	38.10
9/32	7.14	3/8	9.52	3/4	19.05	1 3/8	1 3/8	3/16	4.76	3/16	4.76	1 1/2	38.10
9/32	7.14	3/8	9.52	25/32	19.84	1 3/8	1 3/8	3/16	4.76	3/16	4.76	1 1/2	38.10
9/32	7.14	3/8	9.52	13/16	20.64	1 3/8	1 3/8	3/16	4.76	3/16	4.76	1 1/2	38.10
9/32	7.14	3/8	9.52	27/32	21.43	1 3/8	1 3/8	3/16	4.76	3/16	4.76	1 1/2	38.10
9/32	7.14	3/8	9.52	7/8	22.22	1 3/8	1 3/8	3/16	4.76	3/16	4.76	1 1/2	38.10
9/32	7.14	3/8	9.52	29/32	23.02	1 3/8	1 3/8	3/16	4.76	3/16	4.76	1 1/2	38.10
9/32	7.14	3/8	9.52	15/16	23.81	1 3/8	1 3/8	3/16	4.76	3/16	4.76	1 1/2	38.10
9/32	7.14	3/8	9.52	31/32	24.61	1 3/8	1 3/8	3/16	4.76	3/16	4.76	1 1/2	38.10
9/32	7.14	3/8	9.52	1	25.40	1 3/8	1 3/8	3/16	4.76	3/16	4.76	1 1/2	38.10
9/32	7.14	3/8	9.52	1 1/8	28.57	1 3/8	1 3/8	3/16	4.76	3/16	4.76	1 1/2	38.10
5/16	7.94	3/8	9.52	19/32	15.08	1 3/8	1 3/8	3/16	4.76	3/16	4.76	1 1/2	38.10
5/16	7.94	3/8	9.52	5/8	15.87	1 3/8	1 3/8	3/16	4.76	3/16	4.76	1 1/2	38.10
5/16	7.94	3/8	9.52	21/32	16.67	1 3/8	1 3/8	3/16	4.76	3/16	4.76	1 1/2	38.10

www.globaltungsten.com

B		E		D		M	A	L		T		C	
inch	mm	inch	mm	inch	mm	inch	inch	inch	mm	inch	mm	inch	mm
5/16	7.94	3/8	9.52	11/16	17.46	1 3/8	1 3/8	3/16	4.76	3/16	4.76	1 1/2	38.10
5/16	7.94	3/8	9.52	23/32	18.26	1 3/8	1 3/8	3/16	4.76	3/16	4.76	1 1/2	38.10
5/16	7.94	3/8	9.52	3/4	19.05	1 3/8	1 3/8	3/16	4.76	3/16	4.76	1 1/2	38.10
5/16	7.94	3/8	9.52	25/32	19.84	1 3/8	1 3/8	3/16	4.76	3/16	4.76	1 1/2	38.10
5/16	7.94	3/8	9.52	13/16	20.64	1 3/8	1 3/8	3/16	4.76	3/16	4.76	1 1/2	38.10
5/16	7.94	3/8	9.52	27/32	21.43	1 3/8	1 3/8	3/16	4.76	3/16	4.76	1 1/2	38.10
5/16	7.94	3/8	9.52	7/8	22.22	1 3/8	1 3/8	3/16	4.76	3/16	4.76	1 1/2	38.10
5/16	7.94	3/8	9.52	29/32	23.02	1 3/8	1 3/8	3/16	4.76	3/16	4.76	1 1/2	38.10
5/16	7.94	3/8	9.52	15/16	23.81	1 3/8	1 3/8	3/16	4.76	3/16	4.76	1 1/2	38.10
5/16	7.94	3/8	9.52	31/32	24.61	1 3/8	1 3/8	3/16	4.76	3/16	4.76	1 1/2	38.10
5/16	7.94	3/8	9.52	1	25.40	1 3/8	1 3/8	3/16	4.76	3/16	4.76	1 1/2	38.10
5/16	7.94	3/8	9.52	1 1/8	28.57	1 3/8	1 3/8	3/16	4.76	3/16	4.76	1 1/2	38.10
11/32	8.73	3/8	9.52	19/32	15.08	1 3/8	1 3/8	3/16	4.76	3/16	4.76	1 1/2	38.10
11/32	8.73	3/8	9.52	5/8	15.87	1 3/8	1 3/8	3/16	4.76	3/16	4.76	1 1/2	38.10
11/32	8.73	3/8	9.52	21/32	16.67	1 3/8	1 3/8	3/16	4.76	3/16	4.76	1 1/2	38.10
11/32	8.73	3/8	9.52	11/16	17.46	1 3/8	1 3/8	3/16	4.76	3/16	4.76	1 1/2	38.10
11/32	8.73	3/8	9.52	23/32	18.26	1 3/8	1 3/8	3/16	4.76	3/16	4.76	1 1/2	38.10
11/32	8.73	3/8	9.52	3/4	19.05	1 3/8	1 3/8	3/16	4.76	3/16	4.76	1 1/2	38.10
11/32	8.73	3/8	9.52	25/32	19.84	1 3/8	1 3/8	3/16	4.76	3/16	4.76	1 1/2	38.10
11/32	8.73	3/8	9.52	13/16	20.64	1 3/8	1 3/8	3/16	4.76	3/16	4.76	1 1/2	38.10
11/32	8.73	3/8	9.52	27/32	21.43	1 3/8	1 3/8	3/16	4.76	3/16	4.76	1 1/2	38.10
11/32	8.73	3/8	9.52	7/8	22.22	1 3/8	1 3/8	3/16	4.76	3/16	4.76	1 1/2	38.10
11/32	8.73	3/8	9.52	29/32	23.02	1 3/8	1 3/8	3/16	4.76	3/16	4.76	1 1/2	38.10
11/32	8.73	3/8	9.52	15/16	23.81	1 3/8	1 3/8	3/16	4.76	3/16	4.76	1 1/2	38.10
11/32	8.73	3/8	9.52	31/32	24.61	1 3/8	1 3/8	3/16	4.76	3/16	4.76	1 1/2	38.10
11/32	8.73	3/8	9.52	1	25.40	1 3/8	1 3/8	3/16	4.76	3/16	4.76	1 1/2	38.10
11/32	8.73	3/8	9.52	1 1/8	28.57	1 3/8	1 3/8	3/16	4.76	3/16	4.76	1 1/2	38.10
3/8	9.52	3/8	9.52	19/32	15.08	1 3/8	1 3/8	3/16	4.76	3/16	4.76	1 1/2	38.10
3/8	9.52	3/8	9.52	5/8	15.87	1 3/8	1 3/8	3/16	4.76	3/16	4.76	1 1/2	38.10
3/8	9.52	3/8	9.52	21/32	16.67	1 3/8	1 3/8	3/16	4.76	3/16	4.76	1 1/2	38.10
3/8	9.52	3/8	9.52	11/16	17.46	1 3/8	1 3/8	3/16	4.76	3/16	4.76	1 1/2	38.10
3/8	9.52	3/8	9.52	23/32	18.26	1 3/8	1 3/8	3/16	4.76	3/16	4.76	1 1/2	38.10
3/8	9.52	3/8	9.52	3/4	19.05	1 3/8	1 3/8	3/16	4.76	3/16	4.76	1 1/2	38.10
3/8	9.52	3/8	9.52	25/32	19.84	1 3/8	1 3/8	3/16	4.76	3/16	4.76	1 1/2	38.10
3/8	9.52	3/8	9.52	13/16	20.64	1 3/8	1 3/8	3/16	4.76	3/16	4.76	1 1/2	38.10
3/8	9.52	3/8	9.52	27/32	21.43	1 3/8	1 3/8	3/16	4.76	3/16	4.76	1 1/2	38.10
3/8	9.52	3/8	9.52	7/8	22.22	1 3/8	1 3/8	3/16	4.76	3/16	4.76	1 1/2	38.10
3/8	9.52	3/8	9.52	29/32	23.02	1 3/8	1 3/8	3/16	4.76	3/16	4.76	1 1/2	38.10
3/8	9.52	3/8	9.52	15/16	23.81	1 3/8	1 3/8	3/16	4.76	3/16	4.76	1 1/2	38.10
3/8	9.52	3/8	9.52	31/32	24.61	1 3/8	1 3/8	3/16	4.76	3/16	4.76	1 1/2	38.10
3/8	9.52	3/8	9.52	1	25.40	1 3/8	1 3/8	3/16	4.76	3/16	4.76	1 1/2	38.10
3/8	9.52	3/8	9.52	1 1/8	28.57	1 3/8	1 3/8	3/16	4.76	3/16	4.76	1 1/2	38.10
3/16	4.76	3/4	19.05	29/32	23.02	1 1/4	1 1/4	3/16	4.76	3/16	4.76	1 1/4	31.75
7/32	5.56	3/4	19.05	29/32	23.02	1 1/4	1 1/4	3/16	4.76	3/16	4.76	1 1/4	31.75
1/4	6.35	3/4	19.05	29/32	23.02	1 1/4	1 1/4	3/16	4.76	3/16	4.76	1 1/4	31.75

www.globaltungsteels.com

B		E		D		M	A	L		T		C	
inch	mm	inch	mm	inch	mm	inch	inch	inch	mm	inch	mm	inch	mm
9/32	7.14	3/4	19.05	29/32	23.02	1 1/4	1 1/4	3/16	4.76	3/16	4.76	1 1/4	31.75
5/16	7.94	3/4	19.05	29/32	23.02	1 1/4	1 1/4	3/16	4.76	3/16	4.76	1 1/4	31.75
11/32	8.73	3/4	19.05	29/32	23.02	1 1/4	1 1/4	3/16	4.76	3/16	4.76	1 1/4	31.75
3/8	9.52	3/4	19.05	29/32	23.02	1 1/4	1 1/4	3/16	4.76	3/16	4.76	1 1/4	31.75
13/32	10.32	3/4	19.05	29/32	23.02	1 1/4	1 1/4	3/16	4.76	3/16	4.76	1 1/4	31.75
7/16	11.11	3/4	19.05	29/32	23.02	1 1/4	1 1/4	3/16	4.76	3/16	4.76	1 1/4	31.75
15/32	11.91	3/4	19.05	29/32	23.02	1 1/4	1 1/4	3/16	4.76	3/16	4.76	1 1/4	31.75
1/2	12.70	3/4	19.05	29/32	23.02	1 1/4	1 1/4	3/16	4.76	3/16	4.76	1 1/4	31.75
17/32	13.49	3/4	19.05	29/32	23.02	1 1/4	1 1/4	3/16	4.76	3/16	4.76	1 1/4	31.75
9/16	14.29	3/4	19.05	29/32	23.02	1 1/4	1 1/4	3/16	4.76	3/16	4.76	1 1/4	31.75
19/32	15.08	3/4	19.05	29/32	23.02	1 1/4	1 1/4	3/16	4.76	3/16	4.76	1 1/4	31.75
5/8	15.87	3/4	19.05	29/32	23.02	1 1/4	1 1/4	3/16	4.76	3/16	4.76	1 1/4	31.75
21/32	16.67	3/4	19.05	29/32	23.02	1 1/4	1 1/4	3/16	4.76	3/16	4.76	1 1/4	31.75
11/16	17.46	3/4	19.05	29/32	23.02	1 1/4	1 1/4	3/16	4.76	3/16	4.76	1 1/4	31.75
23/32	18.26	3/4	19.05	29/32	23.02	1 1/4	1 1/4	3/16	4.76	3/16	4.76	1 1/4	31.75
3/4	19.05	3/4	19.05	29/32	23.02	1 1/4	1 1/4	3/16	4.76	3/16	4.76	1 1/4	31.75
3/16	4.76	3/4	19.05	15/16	23.81	1 1/4	1 1/4	3/16	4.76	3/16	4.76	1 1/4	31.75
7/32	5.56	3/4	19.05	15/16	23.81	1 1/4	1 1/4	3/16	4.76	3/16	4.76	1 1/4	31.75
1/4	6.35	3/4	19.05	15/16	23.81	1 1/4	1 1/4	3/16	4.76	3/16	4.76	1 1/4	31.75
9/32	7.14	3/4	19.05	15/16	23.81	1 1/4	1 1/4	3/16	4.76	3/16	4.76	1 1/4	31.75
5/16	7.94	3/4	19.05	15/16	23.81	1 1/4	1 1/4	3/16	4.76	3/16	4.76	1 1/4	31.75
11/32	8.73	3/4	19.05	15/16	23.81	1 1/4	1 1/4	3/16	4.76	3/16	4.76	1 1/4	31.75
3/8	9.52	3/4	19.05	15/16	23.81	1 1/4	1 1/4	3/16	4.76	3/16	4.76	1 1/4	31.75
13/32	10.32	3/4	19.05	15/16	23.81	1 1/4	1 1/4	3/16	4.76	3/16	4.76	1 1/4	31.75
7/16	11.11	3/4	19.05	15/16	23.81	1 1/4	1 1/4	3/16	4.76	3/16	4.76	1 1/4	31.75
15/32	11.91	3/4	19.05	15/16	23.81	1 1/4	1 1/4	3/16	4.76	3/16	4.76	1 1/4	31.75
1/2	12.70	3/4	19.05	15/16	23.81	1 1/4	1 1/4	3/16	4.76	3/16	4.76	1 1/4	31.75
17/32	13.49	3/4	19.05	15/16	23.81	1 1/4	1 1/4	3/16	4.76	3/16	4.76	1 1/4	31.75
9/16	14.29	3/4	19.05	15/16	23.81	1 1/4	1 1/4	3/16	4.76	3/16	4.76	1 1/4	31.75
19/32	15.08	3/4	19.05	15/16	23.81	1 1/4	1 1/4	3/16	4.76	3/16	4.76	1 1/4	31.75
5/8	15.87	3/4	19.05	15/16	23.81	1 1/4	1 1/4	3/16	4.76	3/16	4.76	1 1/4	31.75
21/32	16.67	3/4	19.05	15/16	23.81	1 1/4	1 1/4	3/16	4.76	3/16	4.76	1 1/4	31.75
11/16	17.46	3/4	19.05	15/16	23.81	1 1/4	1 1/4	3/16	4.76	3/16	4.76	1 1/4	31.75
23/32	18.26	3/4	19.05	15/16	23.81	1 1/4	1 1/4	3/16	4.76	3/16	4.76	1 1/4	31.75
3/4	19.05	3/4	19.05	15/16	23.81	1 1/4	1 1/4	3/16	4.76	3/16	4.76	1 1/4	31.75
3/16	4.76	3/4	19.05	31/32	24.61	1 1/4	1 1/4	3/16	4.76	3/16	4.76	1 1/4	31.75
7/32	5.56	3/4	19.05	31/32	24.61	1 1/4	1 1/4	3/16	4.76	3/16	4.76	1 1/4	31.75
1/4	6.35	3/4	19.05	31/32	24.61	1 1/4	1 1/4	3/16	4.76	3/16	4.76	1 1/4	31.75
9/32	7.14	3/4	19.05	31/32	24.61	1 1/4	1 1/4	3/16	4.76	3/16	4.76	1 1/4	31.75
5/16	7.94	3/4	19.05	31/32	24.61	1 1/4	1 1/4	3/16	4.76	3/16	4.76	1 1/4	31.75
11/32	8.73	3/4	19.05	31/32	24.61	1 1/4	1 1/4	3/16	4.76	3/16	4.76	1 1/4	31.75
3/8	9.52	3/4	19.05	31/32	24.61	1 1/4	1 1/4	3/16	4.76	3/16	4.76	1 1/4	31.75
13/32	10.32	3/4	19.05	31/32	24.61	1 1/4	1 1/4	3/16	4.76	3/16	4.76	1 1/4	31.75
7/16	11.11	3/4	19.05	31/32	24.61	1 1/4	1 1/4	3/16	4.76	3/16	4.76	1 1/4	31.75
15/32	11.91	3/4	19.05	31/32	24.61	1 1/4	1 1/4	3/16	4.76	3/16	4.76	1 1/4	31.75

www.globaltungsten.com

B		E		D		M	A	L		T		C	
inch	mm	inch	mm	inch	mm	inch	inch	inch	mm	inch	mm	inch	mm
1/2	12.70	3/4	19.05	31/32	24.61	1 1/4	1 1/4	3/16	4.76	3/16	4.76	1 1/4	31.75
17/32	13.49	3/4	19.05	31/32	24.61	1 1/4	1 1/4	3/16	4.76	3/16	4.76	1 1/4	31.75
9/16	14.29	3/4	19.05	31/32	24.61	1 1/4	1 1/4	3/16	4.76	3/16	4.76	1 1/4	31.75
19/32	15.08	3/4	19.05	31/32	24.61	1 1/4	1 1/4	3/16	4.76	3/16	4.76	1 1/4	31.75
5/8	15.87	3/4	19.05	31/32	24.61	1 1/4	1 1/4	3/16	4.76	3/16	4.76	1 1/4	31.75
21/32	16.67	3/4	19.05	31/32	24.61	1 1/4	1 1/4	3/16	4.76	3/16	4.76	1 1/4	31.75
11/16	17.46	3/4	19.05	31/32	24.61	1 1/4	1 1/4	3/16	4.76	3/16	4.76	1 1/4	31.75
23/32	18.26	3/4	19.05	31/32	24.61	1 1/4	1 1/4	3/16	4.76	3/16	4.76	1 1/4	31.75
3/4	19.05	3/4	19.05	31/32	24.61	1 1/4	1 1/4	3/16	4.76	3/16	4.76	1 1/4	31.75
3/16	4.76	3/4	19.05	1	25.40	1 1/4	1 1/4	3/16	4.76	3/16	4.76	1 1/4	31.75
7/32	5.56	3/4	19.05	1	25.40	1 1/4	1 1/4	3/16	4.76	3/16	4.76	1 1/4	31.75
1/4	6.35	3/4	19.05	1	25.40	1 1/4	1 1/4	3/16	4.76	3/16	4.76	1 1/4	31.75
9/32	7.14	3/4	19.05	1	25.40	1 1/4	1 1/4	3/16	4.76	3/16	4.76	1 1/4	31.75
5/16	7.94	3/4	19.05	1	25.40	1 1/4	1 1/4	3/16	4.76	3/16	4.76	1 1/4	31.75
11/32	8.73	3/4	19.05	1	25.40	1 1/4	1 1/4	3/16	4.76	3/16	4.76	1 1/4	31.75
3/8	9.52	3/4	19.05	1	25.40	1 1/4	1 1/4	3/16	4.76	3/16	4.76	1 1/4	31.75
13/32	10.32	3/4	19.05	1	25.40	1 1/4	1 1/4	3/16	4.76	3/16	4.76	1 1/4	31.75
7/16	11.11	3/4	19.05	1	25.40	1 1/4	1 1/4	3/16	4.76	3/16	4.76	1 1/4	31.75
15/32	11.91	3/4	19.05	1	25.40	1 1/4	1 1/4	3/16	4.76	3/16	4.76	1 1/4	31.75
1/2	12.70	3/4	19.05	1	25.40	1 1/4	1 1/4	3/16	4.76	3/16	4.76	1 1/4	31.75
17/32	13.49	3/4	19.05	1	25.40	1 1/4	1 1/4	3/16	4.76	3/16	4.76	1 1/4	31.75
9/16	14.29	3/4	19.05	1	25.40	1 1/4	1 1/4	3/16	4.76	3/16	4.76	1 1/4	31.75
19/32	15.08	3/4	19.05	1	25.40	1 1/4	1 1/4	3/16	4.76	3/16	4.76	1 1/4	31.75
5/8	15.87	3/4	19.05	1	25.40	1 1/4	1 1/4	3/16	4.76	3/16	4.76	1 1/4	31.75
21/32	16.67	3/4	19.05	1	25.40	1 1/4	1 1/4	3/16	4.76	3/16	4.76	1 1/4	31.75
11/16	17.46	3/4	19.05	1	25.40	1 1/4	1 1/4	3/16	4.76	3/16	4.76	1 1/4	31.75
23/32	18.26	3/4	19.05	1	25.40	1 1/4	1 1/4	3/16	4.76	3/16	4.76	1 1/4	31.75
3/4	19.05	3/4	19.05	1	25.40	1 1/4	1 1/4	3/16	4.76	3/16	4.76	1 1/4	31.75
3/16	4.76	5/8	15.87	25/32	19.84	1 1/4	1 1/4	3/16	4.76	3/16	4.76	1 1/4	31.75
3/16	4.76	5/8	15.87	13/16	20.64	1 1/4	1 1/4	3/16	4.76	3/16	4.76	1 1/4	31.75
3/16	4.76	5/8	15.87	27/32	21.43	1 1/4	1 1/4	3/16	4.76	3/16	4.76	1 1/4	31.75
3/16	4.76	5/8	15.87	7/8	22.22	1 1/4	1 1/4	3/16	4.76	3/16	4.76	1 1/4	31.75
3/16	4.76	5/8	15.87	29/32	23.02	1 1/4	1 1/4	3/16	4.76	3/16	4.76	1 1/4	31.75
3/16	4.76	5/8	15.87	15/16	23.81	1 1/4	1 1/4	3/16	4.76	3/16	4.76	1 1/4	31.75
3/16	4.76	5/8	15.87	31/32	24.61	1 1/4	1 1/4	3/16	4.76	3/16	4.76	1 1/4	31.75
3/16	4.76	5/8	15.87	1	25.40	1 1/4	1 1/4	3/16	4.76	3/16	4.76	1 1/4	31.75
7/32	5.56	5/8	15.87	25/32	19.84	1 1/4	1 1/4	3/16	4.76	3/16	4.76	1 1/4	31.75
7/32	5.56	5/8	15.87	13/16	20.64	1 1/4	1 1/4	3/16	4.76	3/16	4.76	1 1/4	31.75
7/32	5.56	5/8	15.87	27/32	21.43	1 1/4	1 1/4	3/16	4.76	3/16	4.76	1 1/4	31.75
7/32	5.56	5/8	15.87	7/8	22.22	1 1/4	1 1/4	3/16	4.76	3/16	4.76	1 1/4	31.75
7/32	5.56	5/8	15.87	29/32	23.02	1 1/4	1 1/4	3/16	4.76	3/16	4.76	1 1/4	31.75
7/32	5.56	5/8	15.87	15/16	23.81	1 1/4	1 1/4	3/16	4.76	3/16	4.76	1 1/4	31.75
7/32	5.56	5/8	15.87	31/32	24.61	1 1/4	1 1/4	3/16	4.76	3/16	4.76	1 1/4	31.75
7/32	5.56	5/8	15.87	1	25.40	1 1/4	1 1/4	3/16	4.76	3/16	4.76	1 1/4	31.75
1/4	6.35	5/8	15.87	25/32	19.84	1 1/4	1 1/4	3/16	4.76	3/16	4.76	1 1/4	31.75

www.globaltungsten.com

B		E		D		M	A	L		T		C	
inch	mm	inch	mm	inch	mm	inch	inch	inch	mm	inch	mm	inch	mm
1/4	6.35	5/8	15.87	13/16	20.64	1 1/4	1 1/4	3/16	4.76	3/16	4.76	1 1/4	31.75
1/4	6.35	5/8	15.87	27/32	21.43	1 1/4	1 1/4	3/16	4.76	3/16	4.76	1 1/4	31.75
1/4	6.35	5/8	15.87	7/8	22.22	1 1/4	1 1/4	3/16	4.76	3/16	4.76	1 1/4	31.75
1/4	6.35	5/8	15.87	29/32	23.02	1 1/4	1 1/4	3/16	4.76	3/16	4.76	1 1/4	31.75
1/4	6.35	5/8	15.87	15/16	23.81	1 1/4	1 1/4	3/16	4.76	3/16	4.76	1 1/4	31.75
1/4	6.35	5/8	15.87	31/32	24.61	1 1/4	1 1/4	3/16	4.76	3/16	4.76	1 1/4	31.75
1/4	6.35	5/8	15.87	1	25.40	1 1/4	1 1/4	3/16	4.76	3/16	4.76	1 1/4	31.75
9/32	7.14	5/8	15.87	25/32	19.84	1 1/4	1 1/4	3/16	4.76	3/16	4.76	1 1/4	31.75
9/32	7.14	5/8	15.87	13/16	20.64	1 1/4	1 1/4	3/16	4.76	3/16	4.76	1 1/4	31.75
9/32	7.14	5/8	15.87	27/32	21.43	1 1/4	1 1/4	3/16	4.76	3/16	4.76	1 1/4	31.75
9/32	7.14	5/8	15.87	7/8	22.22	1 1/4	1 1/4	3/16	4.76	3/16	4.76	1 1/4	31.75
9/32	7.14	5/8	15.87	29/32	23.02	1 1/4	1 1/4	3/16	4.76	3/16	4.76	1 1/4	31.75
9/32	7.14	5/8	15.87	15/16	23.81	1 1/4	1 1/4	3/16	4.76	3/16	4.76	1 1/4	31.75
9/32	7.14	5/8	15.87	31/32	24.61	1 1/4	1 1/4	3/16	4.76	3/16	4.76	1 1/4	31.75
9/32	7.14	5/8	15.87	1	25.40	1 1/4	1 1/4	3/16	4.76	3/16	4.76	1 1/4	31.75
5/16	7.94	5/8	15.87	25/32	19.84	1 1/4	1 1/4	3/16	4.76	3/16	4.76	1 1/4	31.75
5/16	7.94	5/8	15.87	13/16	20.64	1 1/4	1 1/4	3/16	4.76	3/16	4.76	1 1/4	31.75
5/16	7.94	5/8	15.87	27/32	21.43	1 1/4	1 1/4	3/16	4.76	3/16	4.76	1 1/4	31.75
5/16	7.94	5/8	15.87	7/8	22.22	1 1/4	1 1/4	3/16	4.76	3/16	4.76	1 1/4	31.75
5/16	7.94	5/8	15.87	29/32	23.02	1 1/4	1 1/4	3/16	4.76	3/16	4.76	1 1/4	31.75
5/16	7.94	5/8	15.87	15/16	23.81	1 1/4	1 1/4	3/16	4.76	3/16	4.76	1 1/4	31.75
5/16	7.94	5/8	15.87	31/32	24.61	1 1/4	1 1/4	3/16	4.76	3/16	4.76	1 1/4	31.75
5/16	7.94	5/8	15.87	1	25.40	1 1/4	1 1/4	3/16	4.76	3/16	4.76	1 1/4	31.75
11/32	8.73	5/8	15.87	25/32	19.84	1 1/4	1 1/4	3/16	4.76	3/16	4.76	1 1/4	31.75
11/32	8.73	5/8	15.87	13/16	20.64	1 1/4	1 1/4	3/16	4.76	3/16	4.76	1 1/4	31.75
11/32	8.73	5/8	15.87	27/32	21.43	1 1/4	1 1/4	3/16	4.76	3/16	4.76	1 1/4	31.75
11/32	8.73	5/8	15.87	7/8	22.22	1 1/4	1 1/4	3/16	4.76	3/16	4.76	1 1/4	31.75
11/32	8.73	5/8	15.87	29/32	23.02	1 1/4	1 1/4	3/16	4.76	3/16	4.76	1 1/4	31.75
11/32	8.73	5/8	15.87	15/16	23.81	1 1/4	1 1/4	3/16	4.76	3/16	4.76	1 1/4	31.75
11/32	8.73	5/8	15.87	31/32	24.61	1 1/4	1 1/4	3/16	4.76	3/16	4.76	1 1/4	31.75
11/32	8.73	5/8	15.87	1	25.40	1 1/4	1 1/4	3/16	4.76	3/16	4.76	1 1/4	31.75
3/8	9.52	5/8	15.87	25/32	19.84	1 1/4	1 1/4	3/16	4.76	3/16	4.76	1 1/4	31.75
3/8	9.52	5/8	15.87	13/16	20.64	1 1/4	1 1/4	3/16	4.76	3/16	4.76	1 1/4	31.75
3/8	9.52	5/8	15.87	27/32	21.43	1 1/4	1 1/4	3/16	4.76	3/16	4.76	1 1/4	31.75
3/8	9.52	5/8	15.87	7/8	22.22	1 1/4	1 1/4	3/16	4.76	3/16	4.76	1 1/4	31.75
3/8	9.52	5/8	15.87	29/32	23.02	1 1/4	1 1/4	3/16	4.76	3/16	4.76	1 1/4	31.75
3/8	9.52	5/8	15.87	15/16	23.81	1 1/4	1 1/4	3/16	4.76	3/16	4.76	1 1/4	31.75
3/8	9.52	5/8	15.87	31/32	24.61	1 1/4	1 1/4	3/16	4.76	3/16	4.76	1 1/4	31.75
3/8	9.52	5/8	15.87	1	25.40	1 1/4	1 1/4	3/16	4.76	3/16	4.76	1 1/4	31.75
13/32	10.32	5/8	15.87	25/32	19.84	1 1/4	1 1/4	3/16	4.76	3/16	4.76	1 1/4	31.75
13/32	10.32	5/8	15.87	13/16	20.64	1 1/4	1 1/4	3/16	4.76	3/16	4.76	1 1/4	31.75
13/32	10.32	5/8	15.87	27/32	21.43	1 1/4	1 1/4	3/16	4.76	3/16	4.76	1 1/4	31.75
13/32	10.32	5/8	15.87	7/8	22.22	1 1/4	1 1/4	3/16	4.76	3/16	4.76	1 1/4	31.75
13/32	10.32	5/8	15.87	29/32	23.02	1 1/4	1 1/4	3/16	4.76	3/16	4.76	1 1/4	31.75
13/32	10.32	5/8	15.87	15/16	23.81	1 1/4	1 1/4	3/16	4.76	3/16	4.76	1 1/4	31.75

www.globaltungsteins.com

B		E		D		M	A	L		T		C	
inch	mm	inch	mm	inch	mm	inch	inch	inch	mm	inch	mm	inch	mm
13/32	10.32	5/8	15.87	31/32	24.61	1 1/4	1 1/4	3/16	4.76	3/16	4.76	1 1/4	31.75
13/32	10.32	5/8	15.87	1	25.40	1 1/4	1 1/4	3/16	4.76	3/16	4.76	1 1/4	31.75
7/16	11.11	5/8	15.87	25/32	19.84	1 1/4	1 1/4	3/16	4.76	3/16	4.76	1 1/4	31.75
7/16	11.11	5/8	15.87	13/16	20.64	1 1/4	1 1/4	3/16	4.76	3/16	4.76	1 1/4	31.75
7/16	11.11	5/8	15.87	27/32	21.43	1 1/4	1 1/4	3/16	4.76	3/16	4.76	1 1/4	31.75
7/16	11.11	5/8	15.87	7/8	22.22	1 1/4	1 1/4	3/16	4.76	3/16	4.76	1 1/4	31.75
7/16	11.11	5/8	15.87	29/32	23.02	1 1/4	1 1/4	3/16	4.76	3/16	4.76	1 1/4	31.75
7/16	11.11	5/8	15.87	15/16	23.81	1 1/4	1 1/4	3/16	4.76	3/16	4.76	1 1/4	31.75
7/16	11.11	5/8	15.87	31/32	24.61	1 1/4	1 1/4	3/16	4.76	3/16	4.76	1 1/4	31.75
7/16	11.11	5/8	15.87	1	25.40	1 1/4	1 1/4	3/16	4.76	3/16	4.76	1 1/4	31.75
15/32	11.91	5/8	15.87	25/32	19.84	1 1/4	1 1/4	3/16	4.76	3/16	4.76	1 1/4	31.75
15/32	11.91	5/8	15.87	13/16	20.64	1 1/4	1 1/4	3/16	4.76	3/16	4.76	1 1/4	31.75
15/32	11.91	5/8	15.87	27/32	21.43	1 1/4	1 1/4	3/16	4.76	3/16	4.76	1 1/4	31.75
15/32	11.91	5/8	15.87	7/8	22.22	1 1/4	1 1/4	3/16	4.76	3/16	4.76	1 1/4	31.75
15/32	11.91	5/8	15.87	29/32	23.02	1 1/4	1 1/4	3/16	4.76	3/16	4.76	1 1/4	31.75
15/32	11.91	5/8	15.87	15/16	23.81	1 1/4	1 1/4	3/16	4.76	3/16	4.76	1 1/4	31.75
15/32	11.91	5/8	15.87	31/32	24.61	1 1/4	1 1/4	3/16	4.76	3/16	4.76	1 1/4	31.75
15/32	11.91	5/8	15.87	1	25.40	1 1/4	1 1/4	3/16	4.76	3/16	4.76	1 1/4	31.75
1/2	12.70	5/8	15.87	25/32	19.84	1 1/4	1 1/4	3/16	4.76	3/16	4.76	1 1/4	31.75
1/2	12.70	5/8	15.87	13/16	20.64	1 1/4	1 1/4	3/16	4.76	3/16	4.76	1 1/4	31.75
1/2	12.70	5/8	15.87	27/32	21.43	1 1/4	1 1/4	3/16	4.76	3/16	4.76	1 1/4	31.75
1/2	12.70	5/8	15.87	7/8	22.22	1 1/4	1 1/4	3/16	4.76	3/16	4.76	1 1/4	31.75
1/2	12.70	5/8	15.87	29/32	23.02	1 1/4	1 1/4	3/16	4.76	3/16	4.76	1 1/4	31.75
1/2	12.70	5/8	15.87	15/16	23.81	1 1/4	1 1/4	3/16	4.76	3/16	4.76	1 1/4	31.75
1/2	12.70	5/8	15.87	31/32	24.61	1 1/4	1 1/4	3/16	4.76	3/16	4.76	1 1/4	31.75
1/2	12.70	5/8	15.87	1	25.40	1 1/4	1 1/4	3/16	4.76	3/16	4.76	1 1/4	31.75
17/32	13.49	5/8	15.87	25/32	19.84	1 1/4	1 1/4	3/16	4.76	3/16	4.76	1 1/4	31.75
17/32	13.49	5/8	15.87	13/16	20.64	1 1/4	1 1/4	3/16	4.76	3/16	4.76	1 1/4	31.75
17/32	13.49	5/8	15.87	27/32	21.43	1 1/4	1 1/4	3/16	4.76	3/16	4.76	1 1/4	31.75
17/32	13.49	5/8	15.87	7/8	22.22	1 1/4	1 1/4	3/16	4.76	3/16	4.76	1 1/4	31.75
17/32	13.49	5/8	15.87	29/32	23.02	1 1/4	1 1/4	3/16	4.76	3/16	4.76	1 1/4	31.75
17/32	13.49	5/8	15.87	15/16	23.81	1 1/4	1 1/4	3/16	4.76	3/16	4.76	1 1/4	31.75
17/32	13.49	5/8	15.87	31/32	24.61	1 1/4	1 1/4	3/16	4.76	3/16	4.76	1 1/4	31.75
17/32	13.49	5/8	15.87	1	25.40	1 1/4	1 1/4	3/16	4.76	3/16	4.76	1 1/4	31.75
9/16	14.29	5/8	15.87	25/32	19.84	1 1/4	1 1/4	3/16	4.76	3/16	4.76	1 1/4	31.75
9/16	14.29	5/8	15.87	13/16	20.64	1 1/4	1 1/4	3/16	4.76	3/16	4.76	1 1/4	31.75
9/16	14.29	5/8	15.87	27/32	21.43	1 1/4	1 1/4	3/16	4.76	3/16	4.76	1 1/4	31.75
9/16	14.29	5/8	15.87	7/8	22.22	1 1/4	1 1/4	3/16	4.76	3/16	4.76	1 1/4	31.75
9/16	14.29	5/8	15.87	29/32	23.02	1 1/4	1 1/4	3/16	4.76	3/16	4.76	1 1/4	31.75
9/16	14.29	5/8	15.87	15/16	23.81	1 1/4	1 1/4	3/16	4.76	3/16	4.76	1 1/4	31.75
9/16	14.29	5/8	15.87	31/32	24.61	1 1/4	1 1/4	3/16	4.76	3/16	4.76	1 1/4	31.75
9/16	14.29	5/8	15.87	1	25.40	1 1/4	1 1/4	3/16	4.76	3/16	4.76	1 1/4	31.75
19/32	15.08	5/8	15.87	25/32	19.84	1 1/4	1 1/4	3/16	4.76	3/16	4.76	1 1/4	31.75
19/32	15.08	5/8	15.87	13/16	20.64	1 1/4	1 1/4	3/16	4.76	3/16	4.76	1 1/4	31.75
19/32	15.08	5/8	15.87	27/32	21.43	1 1/4	1 1/4	3/16	4.76	3/16	4.76	1 1/4	31.75

www.globaltungsteins.com

B		E		D		M	A	L		T		C	
inch	mm	inch	mm	inch	mm	inch	inch	inch	mm	inch	mm	inch	mm
19/32	15.08	5/8	15.87	7/8	22.22	1 1/4	1 1/4	3/16	4.76	3/16	4.76	1 1/4	31.75
19/32	15.08	5/8	15.87	29/32	23.02	1 1/4	1 1/4	3/16	4.76	3/16	4.76	1 1/4	31.75
19/32	15.08	5/8	15.87	15/16	23.81	1 1/4	1 1/4	3/16	4.76	3/16	4.76	1 1/4	31.75
19/32	15.08	5/8	15.87	31/32	24.61	1 1/4	1 1/4	3/16	4.76	3/16	4.76	1 1/4	31.75
19/32	15.08	5/8	15.87	1	25.40	1 1/4	1 1/4	3/16	4.76	3/16	4.76	1 1/4	31.75
5/8	15.87	5/8	15.87	25/32	19.84	1 1/4	1 1/4	3/16	4.76	3/16	4.76	1 1/4	31.75
5/8	15.87	5/8	15.87	13/16	20.64	1 1/4	1 1/4	3/16	4.76	3/16	4.76	1 1/4	31.75
5/8	15.87	5/8	15.87	27/32	21.43	1 1/4	1 1/4	3/16	4.76	3/16	4.76	1 1/4	31.75
5/8	15.87	5/8	15.87	7/8	22.22	1 1/4	1 1/4	3/16	4.76	3/16	4.76	1 1/4	31.75
5/8	15.87	5/8	15.87	29/32	23.02	1 1/4	1 1/4	3/16	4.76	3/16	4.76	1 1/4	31.75
5/8	15.87	5/8	15.87	15/16	23.81	1 1/4	1 1/4	3/16	4.76	3/16	4.76	1 1/4	31.75
5/8	15.87	5/8	15.87	31/32	24.61	1 1/4	1 1/4	3/16	4.76	3/16	4.76	1 1/4	31.75
5/8	15.87	5/8	15.87	1	25.40	1 1/4	1 1/4	3/16	4.76	3/16	4.76	1 1/4	31.75
3/16	4.76	1/2	12.70	21/32	16.67	1 1/4	1 1/4	3/16	4.76	3/16	4.76	1 1/4	31.75
3/16	4.76	1/2	12.70	11/16	17.46	1 1/4	1 1/4	3/16	4.76	3/16	4.76	1 1/4	31.75
3/16	4.76	1/2	12.70	23/32	18.26	1 1/4	1 1/4	3/16	4.76	3/16	4.76	1 1/4	31.75
3/16	4.76	1/2	12.70	3/4	19.05	1 1/4	1 1/4	3/16	4.76	3/16	4.76	1 1/4	31.75
3/16	4.76	1/2	12.70	25/32	19.84	1 1/4	1 1/4	3/16	4.76	3/16	4.76	1 1/4	31.75
3/16	4.76	1/2	12.70	13/16	20.64	1 1/4	1 1/4	3/16	4.76	3/16	4.76	1 1/4	31.75
3/16	4.76	1/2	12.70	27/32	21.43	1 1/4	1 1/4	3/16	4.76	3/16	4.76	1 1/4	31.75
3/16	4.76	1/2	12.70	7/8	22.22	1 1/4	1 1/4	3/16	4.76	3/16	4.76	1 1/4	31.75
3/16	4.76	1/2	12.70	29/32	23.02	1 1/4	1 1/4	3/16	4.76	3/16	4.76	1 1/4	31.75
3/16	4.76	1/2	12.70	15/16	23.81	1 1/4	1 1/4	3/16	4.76	3/16	4.76	1 1/4	31.75
3/16	4.76	1/2	12.70	31/32	24.61	1 1/4	1 1/4	3/16	4.76	3/16	4.76	1 1/4	31.75
3/16	4.76	1/2	12.70	1	25.40	1 1/4	1 1/4	3/16	4.76	3/16	4.76	1 1/4	31.75
7/32	5.56	1/2	12.70	21/32	16.67	1 1/4	1 1/4	3/16	4.76	3/16	4.76	1 1/4	31.75
7/32	5.56	1/2	12.70	11/16	17.46	1 1/4	1 1/4	3/16	4.76	3/16	4.76	1 1/4	31.75
7/32	5.56	1/2	12.70	23/32	18.26	1 1/4	1 1/4	3/16	4.76	3/16	4.76	1 1/4	31.75
7/32	5.56	1/2	12.70	3/4	19.05	1 1/4	1 1/4	3/16	4.76	3/16	4.76	1 1/4	31.75
7/32	5.56	1/2	12.70	25/32	19.84	1 1/4	1 1/4	3/16	4.76	3/16	4.76	1 1/4	31.75
7/32	5.56	1/2	12.70	13/16	20.64	1 1/4	1 1/4	3/16	4.76	3/16	4.76	1 1/4	31.75
7/32	5.56	1/2	12.70	27/32	21.43	1 1/4	1 1/4	3/16	4.76	3/16	4.76	1 1/4	31.75
7/32	5.56	1/2	12.70	7/8	22.22	1 1/4	1 1/4	3/16	4.76	3/16	4.76	1 1/4	31.75
7/32	5.56	1/2	12.70	29/32	23.02	1 1/4	1 1/4	3/16	4.76	3/16	4.76	1 1/4	31.75
7/32	5.56	1/2	12.70	15/16	23.81	1 1/4	1 1/4	3/16	4.76	3/16	4.76	1 1/4	31.75
7/32	5.56	1/2	12.70	31/32	24.61	1 1/4	1 1/4	3/16	4.76	3/16	4.76	1 1/4	31.75
7/32	5.56	1/2	12.70	1	25.40	1 1/4	1 1/4	3/16	4.76	3/16	4.76	1 1/4	31.75
1/4	6.35	1/2	12.70	21/32	16.67	1 1/4	1 1/4	3/16	4.76	3/16	4.76	1 1/4	31.75
1/4	6.35	1/2	12.70	11/16	17.46	1 1/4	1 1/4	3/16	4.76	3/16	4.76	1 1/4	31.75
1/4	6.35	1/2	12.70	23/32	18.26	1 1/4	1 1/4	3/16	4.76	3/16	4.76	1 1/4	31.75
1/4	6.35	1/2	12.70	3/4	19.05	1 1/4	1 1/4	3/16	4.76	3/16	4.76	1 1/4	31.75
1/4	6.35	1/2	12.70	25/32	19.84	1 1/4	1 1/4	3/16	4.76	3/16	4.76	1 1/4	31.75
1/4	6.35	1/2	12.70	13/16	20.64	1 1/4	1 1/4	3/16	4.76	3/16	4.76	1 1/4	31.75
1/4	6.35	1/2	12.70	27/32	21.43	1 1/4	1 1/4	3/16	4.76	3/16	4.76	1 1/4	31.75
1/4	6.35	1/2	12.70	7/8	22.22	1 1/4	1 1/4	3/16	4.76	3/16	4.76	1 1/4	31.75

www.globaltungsten.com

B		E		D		M	A	L		T		C	
inch	mm	inch	mm	inch	mm	inch	inch	inch	mm	inch	mm	inch	mm
1/4	6.35	1/2	12.70	29/32	23.02	1 1/4	1 1/4	3/16	4.76	3/16	4.76	1 1/4	31.75
1/4	6.35	1/2	12.70	15/16	23.81	1 1/4	1 1/4	3/16	4.76	3/16	4.76	1 1/4	31.75
1/4	6.35	1/2	12.70	31/32	24.61	1 1/4	1 1/4	3/16	4.76	3/16	4.76	1 1/4	31.75
1/4	6.35	1/2	12.70	1	25.40	1 1/4	1 1/4	3/16	4.76	3/16	4.76	1 1/4	31.75
9/32	7.14	1/2	12.70	21/32	16.67	1 1/4	1 1/4	3/16	4.76	3/16	4.76	1 1/4	31.75
9/32	7.14	1/2	12.70	11/16	17.46	1 1/4	1 1/4	3/16	4.76	3/16	4.76	1 1/4	31.75
9/32	7.14	1/2	12.70	23/32	18.26	1 1/4	1 1/4	3/16	4.76	3/16	4.76	1 1/4	31.75
9/32	7.14	1/2	12.70	3/4	19.05	1 1/4	1 1/4	3/16	4.76	3/16	4.76	1 1/4	31.75
9/32	7.14	1/2	12.70	25/32	19.84	1 1/4	1 1/4	3/16	4.76	3/16	4.76	1 1/4	31.75
9/32	7.14	1/2	12.70	13/16	20.64	1 1/4	1 1/4	3/16	4.76	3/16	4.76	1 1/4	31.75
9/32	7.14	1/2	12.70	27/32	21.43	1 1/4	1 1/4	3/16	4.76	3/16	4.76	1 1/4	31.75
9/32	7.14	1/2	12.70	7/8	22.22	1 1/4	1 1/4	3/16	4.76	3/16	4.76	1 1/4	31.75
9/32	7.14	1/2	12.70	29/32	23.02	1 1/4	1 1/4	3/16	4.76	3/16	4.76	1 1/4	31.75
9/32	7.14	1/2	12.70	15/16	23.81	1 1/4	1 1/4	3/16	4.76	3/16	4.76	1 1/4	31.75
9/32	7.14	1/2	12.70	31/32	24.61	1 1/4	1 1/4	3/16	4.76	3/16	4.76	1 1/4	31.75
9/32	7.14	1/2	12.70	1	25.40	1 1/4	1 1/4	3/16	4.76	3/16	4.76	1 1/4	31.75
5/16	7.94	1/2	12.70	21/32	16.67	1 1/4	1 1/4	3/16	4.76	3/16	4.76	1 1/4	31.75
5/16	7.94	1/2	12.70	11/16	17.46	1 1/4	1 1/4	3/16	4.76	3/16	4.76	1 1/4	31.75
5/16	7.94	1/2	12.70	23/32	18.26	1 1/4	1 1/4	3/16	4.76	3/16	4.76	1 1/4	31.75
5/16	7.94	1/2	12.70	3/4	19.05	1 1/4	1 1/4	3/16	4.76	3/16	4.76	1 1/4	31.75
5/16	7.94	1/2	12.70	25/32	19.84	1 1/4	1 1/4	3/16	4.76	3/16	4.76	1 1/4	31.75
5/16	7.94	1/2	12.70	13/16	20.64	1 1/4	1 1/4	3/16	4.76	3/16	4.76	1 1/4	31.75
5/16	7.94	1/2	12.70	27/32	21.43	1 1/4	1 1/4	3/16	4.76	3/16	4.76	1 1/4	31.75
5/16	7.94	1/2	12.70	7/8	22.22	1 1/4	1 1/4	3/16	4.76	3/16	4.76	1 1/4	31.75
5/16	7.94	1/2	12.70	29/32	23.02	1 1/4	1 1/4	3/16	4.76	3/16	4.76	1 1/4	31.75
5/16	7.94	1/2	12.70	15/16	23.81	1 1/4	1 1/4	3/16	4.76	3/16	4.76	1 1/4	31.75
5/16	7.94	1/2	12.70	31/32	24.61	1 1/4	1 1/4	3/16	4.76	3/16	4.76	1 1/4	31.75
5/16	7.94	1/2	12.70	1	25.40	1 1/4	1 1/4	3/16	4.76	3/16	4.76	1 1/4	31.75
11/32	8.73	1/2	12.70	21/32	16.67	1 1/4	1 1/4	3/16	4.76	3/16	4.76	1 1/4	31.75
11/32	8.73	1/2	12.70	11/16	17.46	1 1/4	1 1/4	3/16	4.76	3/16	4.76	1 1/4	31.75
11/32	8.73	1/2	12.70	23/32	18.26	1 1/4	1 1/4	3/16	4.76	3/16	4.76	1 1/4	31.75
11/32	8.73	1/2	12.70	3/4	19.05	1 1/4	1 1/4	3/16	4.76	3/16	4.76	1 1/4	31.75
11/32	8.73	1/2	12.70	25/32	19.84	1 1/4	1 1/4	3/16	4.76	3/16	4.76	1 1/4	31.75
11/32	8.73	1/2	12.70	13/16	20.64	1 1/4	1 1/4	3/16	4.76	3/16	4.76	1 1/4	31.75
11/32	8.73	1/2	12.70	27/32	21.43	1 1/4	1 1/4	3/16	4.76	3/16	4.76	1 1/4	31.75
11/32	8.73	1/2	12.70	7/8	22.22	1 1/4	1 1/4	3/16	4.76	3/16	4.76	1 1/4	31.75
11/32	8.73	1/2	12.70	29/32	23.02	1 1/4	1 1/4	3/16	4.76	3/16	4.76	1 1/4	31.75
11/32	8.73	1/2	12.70	15/16	23.81	1 1/4	1 1/4	3/16	4.76	3/16	4.76	1 1/4	31.75
11/32	8.73	1/2	12.70	31/32	24.61	1 1/4	1 1/4	3/16	4.76	3/16	4.76	1 1/4	31.75
11/32	8.73	1/2	12.70	1	25.40	1 1/4	1 1/4	3/16	4.76	3/16	4.76	1 1/4	31.75
3/8	9.52	1/2	12.70	21/32	16.67	1 1/4	1 1/4	3/16	4.76	3/16	4.76	1 1/4	31.75
3/8	9.52	1/2	12.70	11/16	17.46	1 1/4	1 1/4	3/16	4.76	3/16	4.76	1 1/4	31.75
3/8	9.52	1/2	12.70	23/32	18.26	1 1/4	1 1/4	3/16	4.76	3/16	4.76	1 1/4	31.75
3/8	9.52	1/2	12.70	3/4	19.05	1 1/4	1 1/4	3/16	4.76	3/16	4.76	1 1/4	31.75
3/8	9.52	1/2	12.70	25/32	19.84	1 1/4	1 1/4	3/16	4.76	3/16	4.76	1 1/4	31.75

www.globaltungsten.com

B		E		D		M	A	L		T		C	
inch	mm	inch	mm	inch	mm	inch	inch	inch	mm	inch	mm	inch	mm
3/8	9.52	1/2	12.70	13/16	20.64	1 1/4	1 1/4	3/16	4.76	3/16	4.76	1 1/4	31.75
3/8	9.52	1/2	12.70	27/32	21.43	1 1/4	1 1/4	3/16	4.76	3/16	4.76	1 1/4	31.75
3/8	9.52	1/2	12.70	7/8	22.22	1 1/4	1 1/4	3/16	4.76	3/16	4.76	1 1/4	31.75
3/8	9.52	1/2	12.70	29/32	23.02	1 1/4	1 1/4	3/16	4.76	3/16	4.76	1 1/4	31.75
3/8	9.52	1/2	12.70	15/16	23.81	1 1/4	1 1/4	3/16	4.76	3/16	4.76	1 1/4	31.75
3/8	9.52	1/2	12.70	31/32	24.61	1 1/4	1 1/4	3/16	4.76	3/16	4.76	1 1/4	31.75
3/8	9.52	1/2	12.70	1	25.40	1 1/4	1 1/4	3/16	4.76	3/16	4.76	1 1/4	31.75
13/32	10.32	1/2	12.70	21/32	16.67	1 1/4	1 1/4	3/16	4.76	3/16	4.76	1 1/4	31.75
13/32	10.32	1/2	12.70	11/16	17.46	1 1/4	1 1/4	3/16	4.76	3/16	4.76	1 1/4	31.75
13/32	10.32	1/2	12.70	23/32	18.26	1 1/4	1 1/4	3/16	4.76	3/16	4.76	1 1/4	31.75
13/32	10.32	1/2	12.70	3/4	19.05	1 1/4	1 1/4	3/16	4.76	3/16	4.76	1 1/4	31.75
13/32	10.32	1/2	12.70	25/32	19.84	1 1/4	1 1/4	3/16	4.76	3/16	4.76	1 1/4	31.75
13/32	10.32	1/2	12.70	13/16	20.64	1 1/4	1 1/4	3/16	4.76	3/16	4.76	1 1/4	31.75
13/32	10.32	1/2	12.70	27/32	21.43	1 1/4	1 1/4	3/16	4.76	3/16	4.76	1 1/4	31.75
13/32	10.32	1/2	12.70	7/8	22.22	1 1/4	1 1/4	3/16	4.76	3/16	4.76	1 1/4	31.75
13/32	10.32	1/2	12.70	29/32	23.02	1 1/4	1 1/4	3/16	4.76	3/16	4.76	1 1/4	31.75
13/32	10.32	1/2	12.70	15/16	23.81	1 1/4	1 1/4	3/16	4.76	3/16	4.76	1 1/4	31.75
13/32	10.32	1/2	12.70	31/32	24.61	1 1/4	1 1/4	3/16	4.76	3/16	4.76	1 1/4	31.75
13/32	10.32	1/2	12.70	1	25.40	1 1/4	1 1/4	3/16	4.76	3/16	4.76	1 1/4	31.75
7/16	11.11	1/2	12.70	21/32	16.67	1 1/4	1 1/4	3/16	4.76	3/16	4.76	1 1/4	31.75
7/16	11.11	1/2	12.70	11/16	17.46	1 1/4	1 1/4	3/16	4.76	3/16	4.76	1 1/4	31.75
7/16	11.11	1/2	12.70	23/32	18.26	1 1/4	1 1/4	3/16	4.76	3/16	4.76	1 1/4	31.75
7/16	11.11	1/2	12.70	3/4	19.05	1 1/4	1 1/4	3/16	4.76	3/16	4.76	1 1/4	31.75
7/16	11.11	1/2	12.70	25/32	19.84	1 1/4	1 1/4	3/16	4.76	3/16	4.76	1 1/4	31.75
7/16	11.11	1/2	12.70	13/16	20.64	1 1/4	1 1/4	3/16	4.76	3/16	4.76	1 1/4	31.75
7/16	11.11	1/2	12.70	27/32	21.43	1 1/4	1 1/4	3/16	4.76	3/16	4.76	1 1/4	31.75
7/16	11.11	1/2	12.70	7/8	22.22	1 1/4	1 1/4	3/16	4.76	3/16	4.76	1 1/4	31.75
7/16	11.11	1/2	12.70	29/32	23.02	1 1/4	1 1/4	3/16	4.76	3/16	4.76	1 1/4	31.75
7/16	11.11	1/2	12.70	15/16	23.81	1 1/4	1 1/4	3/16	4.76	3/16	4.76	1 1/4	31.75
7/16	11.11	1/2	12.70	31/32	24.61	1 1/4	1 1/4	3/16	4.76	3/16	4.76	1 1/4	31.75
7/16	11.11	1/2	12.70	1	25.40	1 1/4	1 1/4	3/16	4.76	3/16	4.76	1 1/4	31.75
15/32	11.91	1/2	12.70	21/32	16.67	1 1/4	1 1/4	3/16	4.76	3/16	4.76	1 1/4	31.75
15/32	11.91	1/2	12.70	11/16	17.46	1 1/4	1 1/4	3/16	4.76	3/16	4.76	1 1/4	31.75
15/32	11.91	1/2	12.70	23/32	18.26	1 1/4	1 1/4	3/16	4.76	3/16	4.76	1 1/4	31.75
15/32	11.91	1/2	12.70	3/4	19.05	1 1/4	1 1/4	3/16	4.76	3/16	4.76	1 1/4	31.75
15/32	11.91	1/2	12.70	25/32	19.84	1 1/4	1 1/4	3/16	4.76	3/16	4.76	1 1/4	31.75
15/32	11.91	1/2	12.70	13/16	20.64	1 1/4	1 1/4	3/16	4.76	3/16	4.76	1 1/4	31.75
15/32	11.91	1/2	12.70	27/32	21.43	1 1/4	1 1/4	3/16	4.76	3/16	4.76	1 1/4	31.75
15/32	11.91	1/2	12.70	7/8	22.22	1 1/4	1 1/4	3/16	4.76	3/16	4.76	1 1/4	31.75
15/32	11.91	1/2	12.70	29/32	23.02	1 1/4	1 1/4	3/16	4.76	3/16	4.76	1 1/4	31.75
15/32	11.91	1/2	12.70	15/16	23.81	1 1/4	1 1/4	3/16	4.76	3/16	4.76	1 1/4	31.75
15/32	11.91	1/2	12.70	31/32	24.61	1 1/4	1 1/4	3/16	4.76	3/16	4.76	1 1/4	31.75
15/32	11.91	1/2	12.70	1	25.40	1 1/4	1 1/4	3/16	4.76	3/16	4.76	1 1/4	31.75
1/2	12.70	1/2	12.70	21/32	16.67	1 1/4	1 1/4	3/16	4.76	3/16	4.76	1 1/4	31.75
1/2	12.70	1/2	12.70	11/16	17.46	1 1/4	1 1/4	3/16	4.76	3/16	4.76	1 1/4	31.75

www.globaltungsten.com

B		E		D		M	A	L		T		C	
inch	mm	inch	mm	inch	mm	inch	inch	inch	mm	inch	mm	inch	mm
1/2	12.70	1/2	12.70	23/32	18.26	1 1/4	1 1/4	3/16	4.76	3/16	4.76	1 1/4	31.75
1/2	12.70	1/2	12.70	3/4	19.05	1 1/4	1 1/4	3/16	4.76	3/16	4.76	1 1/4	31.75
1/2	12.70	1/2	12.70	25/32	19.84	1 1/4	1 1/4	3/16	4.76	3/16	4.76	1 1/4	31.75
1/2	12.70	1/2	12.70	13/16	20.64	1 1/4	1 1/4	3/16	4.76	3/16	4.76	1 1/4	31.75
1/2	12.70	1/2	12.70	27/32	21.43	1 1/4	1 1/4	3/16	4.76	3/16	4.76	1 1/4	31.75
1/2	12.70	1/2	12.70	7/8	22.22	1 1/4	1 1/4	3/16	4.76	3/16	4.76	1 1/4	31.75
1/2	12.70	1/2	12.70	29/32	23.02	1 1/4	1 1/4	3/16	4.76	3/16	4.76	1 1/4	31.75
1/2	12.70	1/2	12.70	15/16	23.81	1 1/4	1 1/4	3/16	4.76	3/16	4.76	1 1/4	31.75
1/2	12.70	1/2	12.70	31/32	24.61	1 1/4	1 1/4	3/16	4.76	3/16	4.76	1 1/4	31.75
1/2	12.70	1/2	12.70	1	25.40	1 1/4	1 1/4	3/16	4.76	3/16	4.76	1 1/4	31.75
3/16	4.76	3/8	9.52	19/32	15.08	1 1/4	1 1/4	3/16	4.76	3/16	4.76	1 1/4	31.75
3/16	4.76	3/8	9.52	5/8	15.87	1 1/4	1 1/4	3/16	4.76	3/16	4.76	1 1/4	31.75
3/16	4.76	3/8	9.52	21/32	16.67	1 1/4	1 1/4	3/16	4.76	3/16	4.76	1 1/4	31.75
3/16	4.76	3/8	9.52	11/16	17.46	1 1/4	1 1/4	3/16	4.76	3/16	4.76	1 1/4	31.75
3/16	4.76	3/8	9.52	23/32	18.26	1 1/4	1 1/4	3/16	4.76	3/16	4.76	1 1/4	31.75
3/16	4.76	3/8	9.52	3/4	19.05	1 1/4	1 1/4	3/16	4.76	3/16	4.76	1 1/4	31.75
3/16	4.76	3/8	9.52	25/32	19.84	1 1/4	1 1/4	3/16	4.76	3/16	4.76	1 1/4	31.75
3/16	4.76	3/8	9.52	13/16	20.64	1 1/4	1 1/4	3/16	4.76	3/16	4.76	1 1/4	31.75
3/16	4.76	3/8	9.52	27/32	21.43	1 1/4	1 1/4	3/16	4.76	3/16	4.76	1 1/4	31.75
3/16	4.76	3/8	9.52	7/8	22.22	1 1/4	1 1/4	3/16	4.76	3/16	4.76	1 1/4	31.75
3/16	4.76	3/8	9.52	29/32	23.02	1 1/4	1 1/4	3/16	4.76	3/16	4.76	1 1/4	31.75
3/16	4.76	3/8	9.52	15/16	23.81	1 1/4	1 1/4	3/16	4.76	3/16	4.76	1 1/4	31.75
3/16	4.76	3/8	9.52	31/32	24.61	1 1/4	1 1/4	3/16	4.76	3/16	4.76	1 1/4	31.75
3/16	4.76	3/8	9.52	1	25.40	1 1/4	1 1/4	3/16	4.76	3/16	4.76	1 1/4	31.75
7/32	5.56	3/8	9.52	19/32	15.08	1 1/4	1 1/4	3/16	4.76	3/16	4.76	1 1/4	31.75
7/32	5.56	3/8	9.52	5/8	15.87	1 1/4	1 1/4	3/16	4.76	3/16	4.76	1 1/4	31.75
7/32	5.56	3/8	9.52	21/32	16.67	1 1/4	1 1/4	3/16	4.76	3/16	4.76	1 1/4	31.75
7/32	5.56	3/8	9.52	11/16	17.46	1 1/4	1 1/4	3/16	4.76	3/16	4.76	1 1/4	31.75
7/32	5.56	3/8	9.52	23/32	18.26	1 1/4	1 1/4	3/16	4.76	3/16	4.76	1 1/4	31.75
7/32	5.56	3/8	9.52	3/4	19.05	1 1/4	1 1/4	3/16	4.76	3/16	4.76	1 1/4	31.75
7/32	5.56	3/8	9.52	25/32	19.84	1 1/4	1 1/4	3/16	4.76	3/16	4.76	1 1/4	31.75
7/32	5.56	3/8	9.52	13/16	20.64	1 1/4	1 1/4	3/16	4.76	3/16	4.76	1 1/4	31.75
7/32	5.56	3/8	9.52	27/32	21.43	1 1/4	1 1/4	3/16	4.76	3/16	4.76	1 1/4	31.75
7/32	5.56	3/8	9.52	7/8	22.22	1 1/4	1 1/4	3/16	4.76	3/16	4.76	1 1/4	31.75
7/32	5.56	3/8	9.52	29/32	23.02	1 1/4	1 1/4	3/16	4.76	3/16	4.76	1 1/4	31.75
7/32	5.56	3/8	9.52	15/16	23.81	1 1/4	1 1/4	3/16	4.76	3/16	4.76	1 1/4	31.75
7/32	5.56	3/8	9.52	31/32	24.61	1 1/4	1 1/4	3/16	4.76	3/16	4.76	1 1/4	31.75
7/32	5.56	3/8	9.52	1	25.40	1 1/4	1 1/4	3/16	4.76	3/16	4.76	1 1/4	31.75
1/4	6.35	3/8	9.52	19/32	15.08	1 1/4	1 1/4	3/16	4.76	3/16	4.76	1 1/4	31.75
1/4	6.35	3/8	9.52	5/8	15.87	1 1/4	1 1/4	3/16	4.76	3/16	4.76	1 1/4	31.75
1/4	6.35	3/8	9.52	21/32	16.67	1 1/4	1 1/4	3/16	4.76	3/16	4.76	1 1/4	31.75
1/4	6.35	3/8	9.52	11/16	17.46	1 1/4	1 1/4	3/16	4.76	3/16	4.76	1 1/4	31.75
1/4	6.35	3/8	9.52	23/32	18.26	1 1/4	1 1/4	3/16	4.76	3/16	4.76	1 1/4	31.75
1/4	6.35	3/8	9.52	3/4	19.05	1 1/4	1 1/4	3/16	4.76	3/16	4.76	1 1/4	31.75
1/4	6.35	3/8	9.52	25/32	19.84	1 1/4	1 1/4	3/16	4.76	3/16	4.76	1 1/4	31.75

www.globaltungsten.com

B		E		D		M	A	L		T		C	
inch	mm	inch	mm	inch	mm	inch	inch	inch	mm	inch	mm	inch	mm
1/4	6.35	3/8	9.52	13/16	20.64	1 1/4	1 1/4	3/16	4.76	3/16	4.76	1 1/4	31.75
1/4	6.35	3/8	9.52	27/32	21.43	1 1/4	1 1/4	3/16	4.76	3/16	4.76	1 1/4	31.75
1/4	6.35	3/8	9.52	7/8	22.22	1 1/4	1 1/4	3/16	4.76	3/16	4.76	1 1/4	31.75
1/4	6.35	3/8	9.52	29/32	23.02	1 1/4	1 1/4	3/16	4.76	3/16	4.76	1 1/4	31.75
1/4	6.35	3/8	9.52	15/16	23.81	1 1/4	1 1/4	3/16	4.76	3/16	4.76	1 1/4	31.75
1/4	6.35	3/8	9.52	31/32	24.61	1 1/4	1 1/4	3/16	4.76	3/16	4.76	1 1/4	31.75
1/4	6.35	3/8	9.52	1	25.40	1 1/4	1 1/4	3/16	4.76	3/16	4.76	1 1/4	31.75
9/32	7.14	3/8	9.52	19/32	15.08	1 1/4	1 1/4	3/16	4.76	3/16	4.76	1 1/4	31.75
9/32	7.14	3/8	9.52	5/8	15.87	1 1/4	1 1/4	3/16	4.76	3/16	4.76	1 1/4	31.75
9/32	7.14	3/8	9.52	21/32	16.67	1 1/4	1 1/4	3/16	4.76	3/16	4.76	1 1/4	31.75
9/32	7.14	3/8	9.52	11/16	17.46	1 1/4	1 1/4	3/16	4.76	3/16	4.76	1 1/4	31.75
9/32	7.14	3/8	9.52	23/32	18.26	1 1/4	1 1/4	3/16	4.76	3/16	4.76	1 1/4	31.75
9/32	7.14	3/8	9.52	3/4	19.05	1 1/4	1 1/4	3/16	4.76	3/16	4.76	1 1/4	31.75
9/32	7.14	3/8	9.52	25/32	19.84	1 1/4	1 1/4	3/16	4.76	3/16	4.76	1 1/4	31.75
9/32	7.14	3/8	9.52	13/16	20.64	1 1/4	1 1/4	3/16	4.76	3/16	4.76	1 1/4	31.75
9/32	7.14	3/8	9.52	27/32	21.43	1 1/4	1 1/4	3/16	4.76	3/16	4.76	1 1/4	31.75
9/32	7.14	3/8	9.52	7/8	22.22	1 1/4	1 1/4	3/16	4.76	3/16	4.76	1 1/4	31.75
9/32	7.14	3/8	9.52	29/32	23.02	1 1/4	1 1/4	3/16	4.76	3/16	4.76	1 1/4	31.75
9/32	7.14	3/8	9.52	15/16	23.81	1 1/4	1 1/4	3/16	4.76	3/16	4.76	1 1/4	31.75
9/32	7.14	3/8	9.52	31/32	24.61	1 1/4	1 1/4	3/16	4.76	3/16	4.76	1 1/4	31.75
9/32	7.14	3/8	9.52	1	25.40	1 1/4	1 1/4	3/16	4.76	3/16	4.76	1 1/4	31.75
5/16	7.94	3/8	9.52	19/32	15.08	1 1/4	1 1/4	3/16	4.76	3/16	4.76	1 1/4	31.75
5/16	7.94	3/8	9.52	5/8	15.87	1 1/4	1 1/4	3/16	4.76	3/16	4.76	1 1/4	31.75
5/16	7.94	3/8	9.52	21/32	16.67	1 1/4	1 1/4	3/16	4.76	3/16	4.76	1 1/4	31.75
5/16	7.94	3/8	9.52	11/16	17.46	1 1/4	1 1/4	3/16	4.76	3/16	4.76	1 1/4	31.75
5/16	7.94	3/8	9.52	23/32	18.26	1 1/4	1 1/4	3/16	4.76	3/16	4.76	1 1/4	31.75
5/16	7.94	3/8	9.52	3/4	19.05	1 1/4	1 1/4	3/16	4.76	3/16	4.76	1 1/4	31.75
5/16	7.94	3/8	9.52	25/32	19.84	1 1/4	1 1/4	3/16	4.76	3/16	4.76	1 1/4	31.75
5/16	7.94	3/8	9.52	13/16	20.64	1 1/4	1 1/4	3/16	4.76	3/16	4.76	1 1/4	31.75
5/16	7.94	3/8	9.52	27/32	21.43	1 1/4	1 1/4	3/16	4.76	3/16	4.76	1 1/4	31.75
5/16	7.94	3/8	9.52	7/8	22.22	1 1/4	1 1/4	3/16	4.76	3/16	4.76	1 1/4	31.75
5/16	7.94	3/8	9.52	29/32	23.02	1 1/4	1 1/4	3/16	4.76	3/16	4.76	1 1/4	31.75
5/16	7.94	3/8	9.52	15/16	23.81	1 1/4	1 1/4	3/16	4.76	3/16	4.76	1 1/4	31.75
5/16	7.94	3/8	9.52	31/32	24.61	1 1/4	1 1/4	3/16	4.76	3/16	4.76	1 1/4	31.75
5/16	7.94	3/8	9.52	1	25.40	1 1/4	1 1/4	3/16	4.76	3/16	4.76	1 1/4	31.75
11/32	8.73	3/8	9.52	19/32	15.08	1 1/4	1 1/4	3/16	4.76	3/16	4.76	1 1/4	31.75
11/32	8.73	3/8	9.52	5/8	15.87	1 1/4	1 1/4	3/16	4.76	3/16	4.76	1 1/4	31.75
11/32	8.73	3/8	9.52	21/32	16.67	1 1/4	1 1/4	3/16	4.76	3/16	4.76	1 1/4	31.75
11/32	8.73	3/8	9.52	11/16	17.46	1 1/4	1 1/4	3/16	4.76	3/16	4.76	1 1/4	31.75
11/32	8.73	3/8	9.52	23/32	18.26	1 1/4	1 1/4	3/16	4.76	3/16	4.76	1 1/4	31.75
11/32	8.73	3/8	9.52	3/4	19.05	1 1/4	1 1/4	3/16	4.76	3/16	4.76	1 1/4	31.75
11/32	8.73	3/8	9.52	25/32	19.84	1 1/4	1 1/4	3/16	4.76	3/16	4.76	1 1/4	31.75
11/32	8.73	3/8	9.52	13/16	20.64	1 1/4	1 1/4	3/16	4.76	3/16	4.76	1 1/4	31.75
11/32	8.73	3/8	9.52	27/32	21.43	1 1/4	1 1/4	3/16	4.76	3/16	4.76	1 1/4	31.75
11/32	8.73	3/8	9.52	7/8	22.22	1 1/4	1 1/4	3/16	4.76	3/16	4.76	1 1/4	31.75

www.globaltungsten.com

B		E		D		M	A	L		T		C	
inch	mm	inch	mm	inch	mm	inch	inch	inch	mm	inch	mm	inch	mm
11/32	8.73	3/8	9.52	29/32	23.02	1 1/4	1 1/4	3/16	4.76	3/16	4.76	1 1/4	31.75
11/32	8.73	3/8	9.52	15/16	23.81	1 1/4	1 1/4	3/16	4.76	3/16	4.76	1 1/4	31.75
11/32	8.73	3/8	9.52	31/32	24.61	1 1/4	1 1/4	3/16	4.76	3/16	4.76	1 1/4	31.75
11/32	8.73	3/8	9.52	1	25.40	1 1/4	1 1/4	3/16	4.76	3/16	4.76	1 1/4	31.75
3/8	9.52	3/8	9.52	19/32	15.08	1 1/4	1 1/4	3/16	4.76	3/16	4.76	1 1/4	31.75
3/8	9.52	3/8	9.52	5/8	15.87	1 1/4	1 1/4	3/16	4.76	3/16	4.76	1 1/4	31.75
3/8	9.52	3/8	9.52	21/32	16.67	1 1/4	1 1/4	3/16	4.76	3/16	4.76	1 1/4	31.75
3/8	9.52	3/8	9.52	11/16	17.46	1 1/4	1 1/4	3/16	4.76	3/16	4.76	1 1/4	31.75
3/8	9.52	3/8	9.52	23/32	18.26	1 1/4	1 1/4	3/16	4.76	3/16	4.76	1 1/4	31.75
3/8	9.52	3/8	9.52	3/4	19.05	1 1/4	1 1/4	3/16	4.76	3/16	4.76	1 1/4	31.75
3/8	9.52	3/8	9.52	25/32	19.84	1 1/4	1 1/4	3/16	4.76	3/16	4.76	1 1/4	31.75
3/8	9.52	3/8	9.52	13/16	20.64	1 1/4	1 1/4	3/16	4.76	3/16	4.76	1 1/4	31.75
3/8	9.52	3/8	9.52	27/32	21.43	1 1/4	1 1/4	3/16	4.76	3/16	4.76	1 1/4	31.75
3/8	9.52	3/8	9.52	7/8	22.22	1 1/4	1 1/4	3/16	4.76	3/16	4.76	1 1/4	31.75
3/8	9.52	3/8	9.52	29/32	23.02	1 1/4	1 1/4	3/16	4.76	3/16	4.76	1 1/4	31.75
3/8	9.52	3/8	9.52	15/16	23.81	1 1/4	1 1/4	3/16	4.76	3/16	4.76	1 1/4	31.75
3/8	9.52	3/8	9.52	31/32	24.61	1 1/4	1 1/4	3/16	4.76	3/16	4.76	1 1/4	31.75
3/8	9.52	3/8	9.52	1	25.40	1 1/4	1 1/4	3/16	4.76	3/16	4.76	1 1/4	31.75
3/16	4.76	3/4	19.05	29/32	23.02	1 1/8	1 1/8	3/16	4.76	3/16	4.76	1 1/4	31.75
7/32	5.56	3/4	19.05	29/32	23.02	1 1/8	1 1/8	3/16	4.76	3/16	4.76	1 1/4	31.75
1/4	6.35	3/4	19.05	29/32	23.02	1 1/8	1 1/8	3/16	4.76	3/16	4.76	1 1/4	31.75
9/32	7.14	3/4	19.05	29/32	23.02	1 1/8	1 1/8	3/16	4.76	3/16	4.76	1 1/4	31.75
5/16	7.94	3/4	19.05	29/32	23.02	1 1/8	1 1/8	3/16	4.76	3/16	4.76	1 1/4	31.75
11/32	8.73	3/4	19.05	29/32	23.02	1 1/8	1 1/8	3/16	4.76	3/16	4.76	1 1/4	31.75
3/8	9.52	3/4	19.05	29/32	23.02	1 1/8	1 1/8	3/16	4.76	3/16	4.76	1 1/4	31.75
13/32	10.32	3/4	19.05	29/32	23.02	1 1/8	1 1/8	3/16	4.76	3/16	4.76	1 1/4	31.75
7/16	11.11	3/4	19.05	29/32	23.02	1 1/8	1 1/8	3/16	4.76	3/16	4.76	1 1/4	31.75
15/32	11.91	3/4	19.05	29/32	23.02	1 1/8	1 1/8	3/16	4.76	3/16	4.76	1 1/4	31.75
1/2	12.70	3/4	19.05	29/32	23.02	1 1/8	1 1/8	3/16	4.76	3/16	4.76	1 1/4	31.75
17/32	13.49	3/4	19.05	29/32	23.02	1 1/8	1 1/8	3/16	4.76	3/16	4.76	1 1/4	31.75
9/16	14.29	3/4	19.05	29/32	23.02	1 1/8	1 1/8	3/16	4.76	3/16	4.76	1 1/4	31.75
19/32	15.08	3/4	19.05	29/32	23.02	1 1/8	1 1/8	3/16	4.76	3/16	4.76	1 1/4	31.75
5/8	15.87	3/4	19.05	29/32	23.02	1 1/8	1 1/8	3/16	4.76	3/16	4.76	1 1/4	31.75
21/32	16.67	3/4	19.05	29/32	23.02	1 1/8	1 1/8	3/16	4.76	3/16	4.76	1 1/4	31.75
11/16	17.46	3/4	19.05	29/32	23.02	1 1/8	1 1/8	3/16	4.76	3/16	4.76	1 1/4	31.75
23/32	18.26	3/4	19.05	29/32	23.02	1 1/8	1 1/8	3/16	4.76	3/16	4.76	1 1/4	31.75
3/4	19.05	3/4	19.05	29/32	23.02	1 1/8	1 1/8	3/16	4.76	3/16	4.76	1 1/4	31.75
3/16	4.76	3/4	19.05	15/16	23.81	1 1/8	1 1/8	3/16	4.76	3/16	4.76	1 1/4	31.75
7/32	5.56	3/4	19.05	15/16	23.81	1 1/8	1 1/8	3/16	4.76	3/16	4.76	1 1/4	31.75
1/4	6.35	3/4	19.05	15/16	23.81	1 1/8	1 1/8	3/16	4.76	3/16	4.76	1 1/4	31.75
9/32	7.14	3/4	19.05	15/16	23.81	1 1/8	1 1/8	3/16	4.76	3/16	4.76	1 1/4	31.75
5/16	7.94	3/4	19.05	15/16	23.81	1 1/8	1 1/8	3/16	4.76	3/16	4.76	1 1/4	31.75
11/32	8.73	3/4	19.05	15/16	23.81	1 1/8	1 1/8	3/16	4.76	3/16	4.76	1 1/4	31.75
3/8	9.52	3/4	19.05	15/16	23.81	1 1/8	1 1/8	3/16	4.76	3/16	4.76	1 1/4	31.75
13/32	10.32	3/4	19.05	15/16	23.81	1 1/8	1 1/8	3/16	4.76	3/16	4.76	1 1/4	31.75

www.globaltungsten.com

B		E		D		M	A	L		T		C	
inch	mm	inch	mm	inch	mm	inch	inch	inch	mm	inch	mm	inch	mm
7/16	11.11	3/4	19.05	15/16	23.81	1 1/8	1 1/8	3/16	4.76	3/16	4.76	1 1/4	31.75
15/32	11.91	3/4	19.05	15/16	23.81	1 1/8	1 1/8	3/16	4.76	3/16	4.76	1 1/4	31.75
1/2	12.70	3/4	19.05	15/16	23.81	1 1/8	1 1/8	3/16	4.76	3/16	4.76	1 1/4	31.75
17/32	13.49	3/4	19.05	15/16	23.81	1 1/8	1 1/8	3/16	4.76	3/16	4.76	1 1/4	31.75
9/16	14.29	3/4	19.05	15/16	23.81	1 1/8	1 1/8	3/16	4.76	3/16	4.76	1 1/4	31.75
19/32	15.08	3/4	19.05	15/16	23.81	1 1/8	1 1/8	3/16	4.76	3/16	4.76	1 1/4	31.75
5/8	15.87	3/4	19.05	15/16	23.81	1 1/8	1 1/8	3/16	4.76	3/16	4.76	1 1/4	31.75
21/32	16.67	3/4	19.05	15/16	23.81	1 1/8	1 1/8	3/16	4.76	3/16	4.76	1 1/4	31.75
11/16	17.46	3/4	19.05	15/16	23.81	1 1/8	1 1/8	3/16	4.76	3/16	4.76	1 1/4	31.75
23/32	18.26	3/4	19.05	15/16	23.81	1 1/8	1 1/8	3/16	4.76	3/16	4.76	1 1/4	31.75
3/4	19.05	3/4	19.05	15/16	23.81	1 1/8	1 1/8	3/16	4.76	3/16	4.76	1 1/4	31.75
3/16	4.76	5/8	15.87	25/32	19.84	1 1/8	1 1/8	3/16	4.76	3/16	4.76	1 1/4	31.75
3/16	4.76	5/8	15.87	13/16	20.64	1 1/8	1 1/8	3/16	4.76	3/16	4.76	1 1/4	31.75
3/16	4.76	5/8	15.87	27/32	21.43	1 1/8	1 1/8	3/16	4.76	3/16	4.76	1 1/4	31.75
3/16	4.76	5/8	15.87	7/8	22.22	1 1/8	1 1/8	3/16	4.76	3/16	4.76	1 1/4	31.75
3/16	4.76	5/8	15.87	29/32	23.02	1 1/8	1 1/8	3/16	4.76	3/16	4.76	1 1/4	31.75
3/16	4.76	5/8	15.87	15/16	23.81	1 1/8	1 1/8	3/16	4.76	3/16	4.76	1 1/4	31.75
7/32	5.56	5/8	15.87	25/32	19.84	1 1/8	1 1/8	3/16	4.76	3/16	4.76	1 1/4	31.75
7/32	5.56	5/8	15.87	13/16	20.64	1 1/8	1 1/8	3/16	4.76	3/16	4.76	1 1/4	31.75
7/32	5.56	5/8	15.87	27/32	21.43	1 1/8	1 1/8	3/16	4.76	3/16	4.76	1 1/4	31.75
7/32	5.56	5/8	15.87	7/8	22.22	1 1/8	1 1/8	3/16	4.76	3/16	4.76	1 1/4	31.75
7/32	5.56	5/8	15.87	29/32	23.02	1 1/8	1 1/8	3/16	4.76	3/16	4.76	1 1/4	31.75
7/32	5.56	5/8	15.87	15/16	23.81	1 1/8	1 1/8	3/16	4.76	3/16	4.76	1 1/4	31.75
1/4	6.35	5/8	15.87	25/32	19.84	1 1/8	1 1/8	3/16	4.76	3/16	4.76	1 1/4	31.75
1/4	6.35	5/8	15.87	13/16	20.64	1 1/8	1 1/8	3/16	4.76	3/16	4.76	1 1/4	31.75
1/4	6.35	5/8	15.87	27/32	21.43	1 1/8	1 1/8	3/16	4.76	3/16	4.76	1 1/4	31.75
1/4	6.35	5/8	15.87	7/8	22.22	1 1/8	1 1/8	3/16	4.76	3/16	4.76	1 1/4	31.75
1/4	6.35	5/8	15.87	29/32	23.02	1 1/8	1 1/8	3/16	4.76	3/16	4.76	1 1/4	31.75
1/4	6.35	5/8	15.87	15/16	23.81	1 1/8	1 1/8	3/16	4.76	3/16	4.76	1 1/4	31.75
9/32	7.14	5/8	15.87	25/32	19.84	1 1/8	1 1/8	3/16	4.76	3/16	4.76	1 1/4	31.75
9/32	7.14	5/8	15.87	13/16	20.64	1 1/8	1 1/8	3/16	4.76	3/16	4.76	1 1/4	31.75
9/32	7.14	5/8	15.87	27/32	21.43	1 1/8	1 1/8	3/16	4.76	3/16	4.76	1 1/4	31.75
9/32	7.14	5/8	15.87	7/8	22.22	1 1/8	1 1/8	3/16	4.76	3/16	4.76	1 1/4	31.75
9/32	7.14	5/8	15.87	29/32	23.02	1 1/8	1 1/8	3/16	4.76	3/16	4.76	1 1/4	31.75
9/32	7.14	5/8	15.87	15/16	23.81	1 1/8	1 1/8	3/16	4.76	3/16	4.76	1 1/4	31.75
5/16	7.94	5/8	15.87	25/32	19.84	1 1/8	1 1/8	3/16	4.76	3/16	4.76	1 1/4	31.75
5/16	7.94	5/8	15.87	13/16	20.64	1 1/8	1 1/8	3/16	4.76	3/16	4.76	1 1/4	31.75
5/16	7.94	5/8	15.87	27/32	21.43	1 1/8	1 1/8	3/16	4.76	3/16	4.76	1 1/4	31.75
5/16	7.94	5/8	15.87	7/8	22.22	1 1/8	1 1/8	3/16	4.76	3/16	4.76	1 1/4	31.75
5/16	7.94	5/8	15.87	29/32	23.02	1 1/8	1 1/8	3/16	4.76	3/16	4.76	1 1/4	31.75
5/16	7.94	5/8	15.87	15/16	23.81	1 1/8	1 1/8	3/16	4.76	3/16	4.76	1 1/4	31.75
11/32	8.73	5/8	15.87	25/32	19.84	1 1/8	1 1/8	3/16	4.76	3/16	4.76	1 1/4	31.75
11/32	8.73	5/8	15.87	13/16	20.64	1 1/8	1 1/8	3/16	4.76	3/16	4.76	1 1/4	31.75
11/32	8.73	5/8	15.87	27/32	21.43	1 1/8	1 1/8	3/16	4.76	3/16	4.76	1 1/4	31.75
11/32	8.73	5/8	15.87	7/8	22.22	1 1/8	1 1/8	3/16	4.76	3/16	4.76	1 1/4	31.75

www.globaltungsten.com

B		E		D		M	A	L		T		C	
inch	mm	inch	mm	inch	mm	inch	inch	inch	mm	inch	mm	inch	mm
11/32	8.73	5/8	15.87	29/32	23.02	1 1/8	1 1/8	3/16	4.76	3/16	4.76	1 1/4	31.75
11/32	8.73	5/8	15.87	15/16	23.81	1 1/8	1 1/8	3/16	4.76	3/16	4.76	1 1/4	31.75
3/8	9.52	5/8	15.87	25/32	19.84	1 1/8	1 1/8	3/16	4.76	3/16	4.76	1 1/4	31.75
3/8	9.52	5/8	15.87	13/16	20.64	1 1/8	1 1/8	3/16	4.76	3/16	4.76	1 1/4	31.75
3/8	9.52	5/8	15.87	27/32	21.43	1 1/8	1 1/8	3/16	4.76	3/16	4.76	1 1/4	31.75
3/8	9.52	5/8	15.87	7/8	22.22	1 1/8	1 1/8	3/16	4.76	3/16	4.76	1 1/4	31.75
3/8	9.52	5/8	15.87	29/32	23.02	1 1/8	1 1/8	3/16	4.76	3/16	4.76	1 1/4	31.75
3/8	9.52	5/8	15.87	15/16	23.81	1 1/8	1 1/8	3/16	4.76	3/16	4.76	1 1/4	31.75
13/32	10.32	5/8	15.87	25/32	19.84	1 1/8	1 1/8	3/16	4.76	3/16	4.76	1 1/4	31.75
13/32	10.32	5/8	15.87	13/16	20.64	1 1/8	1 1/8	3/16	4.76	3/16	4.76	1 1/4	31.75
13/32	10.32	5/8	15.87	27/32	21.43	1 1/8	1 1/8	3/16	4.76	3/16	4.76	1 1/4	31.75
13/32	10.32	5/8	15.87	7/8	22.22	1 1/8	1 1/8	3/16	4.76	3/16	4.76	1 1/4	31.75
13/32	10.32	5/8	15.87	29/32	23.02	1 1/8	1 1/8	3/16	4.76	3/16	4.76	1 1/4	31.75
13/32	10.32	5/8	15.87	15/16	23.81	1 1/8	1 1/8	3/16	4.76	3/16	4.76	1 1/4	31.75
7/16	11.11	5/8	15.87	25/32	19.84	1 1/8	1 1/8	3/16	4.76	3/16	4.76	1 1/4	31.75
7/16	11.11	5/8	15.87	13/16	20.64	1 1/8	1 1/8	3/16	4.76	3/16	4.76	1 1/4	31.75
7/16	11.11	5/8	15.87	27/32	21.43	1 1/8	1 1/8	3/16	4.76	3/16	4.76	1 1/4	31.75
7/16	11.11	5/8	15.87	7/8	22.22	1 1/8	1 1/8	3/16	4.76	3/16	4.76	1 1/4	31.75
7/16	11.11	5/8	15.87	29/32	23.02	1 1/8	1 1/8	3/16	4.76	3/16	4.76	1 1/4	31.75
7/16	11.11	5/8	15.87	15/16	23.81	1 1/8	1 1/8	3/16	4.76	3/16	4.76	1 1/4	31.75
15/32	11.91	5/8	15.87	25/32	19.84	1 1/8	1 1/8	3/16	4.76	3/16	4.76	1 1/4	31.75
15/32	11.91	5/8	15.87	13/16	20.64	1 1/8	1 1/8	3/16	4.76	3/16	4.76	1 1/4	31.75
15/32	11.91	5/8	15.87	27/32	21.43	1 1/8	1 1/8	3/16	4.76	3/16	4.76	1 1/4	31.75
15/32	11.91	5/8	15.87	7/8	22.22	1 1/8	1 1/8	3/16	4.76	3/16	4.76	1 1/4	31.75
15/32	11.91	5/8	15.87	29/32	23.02	1 1/8	1 1/8	3/16	4.76	3/16	4.76	1 1/4	31.75
15/32	11.91	5/8	15.87	15/16	23.81	1 1/8	1 1/8	3/16	4.76	3/16	4.76	1 1/4	31.75
1/2	12.70	5/8	15.87	25/32	19.84	1 1/8	1 1/8	3/16	4.76	3/16	4.76	1 1/4	31.75
1/2	12.70	5/8	15.87	13/16	20.64	1 1/8	1 1/8	3/16	4.76	3/16	4.76	1 1/4	31.75
1/2	12.70	5/8	15.87	27/32	21.43	1 1/8	1 1/8	3/16	4.76	3/16	4.76	1 1/4	31.75
1/2	12.70	5/8	15.87	7/8	22.22	1 1/8	1 1/8	3/16	4.76	3/16	4.76	1 1/4	31.75
1/2	12.70	5/8	15.87	29/32	23.02	1 1/8	1 1/8	3/16	4.76	3/16	4.76	1 1/4	31.75
1/2	12.70	5/8	15.87	15/16	23.81	1 1/8	1 1/8	3/16	4.76	3/16	4.76	1 1/4	31.75
17/32	13.49	5/8	15.87	25/32	19.84	1 1/8	1 1/8	3/16	4.76	3/16	4.76	1 1/4	31.75
17/32	13.49	5/8	15.87	13/16	20.64	1 1/8	1 1/8	3/16	4.76	3/16	4.76	1 1/4	31.75
17/32	13.49	5/8	15.87	27/32	21.43	1 1/8	1 1/8	3/16	4.76	3/16	4.76	1 1/4	31.75
17/32	13.49	5/8	15.87	7/8	22.22	1 1/8	1 1/8	3/16	4.76	3/16	4.76	1 1/4	31.75
17/32	13.49	5/8	15.87	29/32	23.02	1 1/8	1 1/8	3/16	4.76	3/16	4.76	1 1/4	31.75
17/32	13.49	5/8	15.87	15/16	23.81	1 1/8	1 1/8	3/16	4.76	3/16	4.76	1 1/4	31.75
9/16	14.29	5/8	15.87	25/32	19.84	1 1/8	1 1/8	3/16	4.76	3/16	4.76	1 1/4	31.75
9/16	14.29	5/8	15.87	13/16	20.64	1 1/8	1 1/8	3/16	4.76	3/16	4.76	1 1/4	31.75
9/16	14.29	5/8	15.87	27/32	21.43	1 1/8	1 1/8	3/16	4.76	3/16	4.76	1 1/4	31.75
9/16	14.29	5/8	15.87	7/8	22.22	1 1/8	1 1/8	3/16	4.76	3/16	4.76	1 1/4	31.75
9/16	14.29	5/8	15.87	29/32	23.02	1 1/8	1 1/8	3/16	4.76	3/16	4.76	1 1/4	31.75
9/16	14.29	5/8	15.87	15/16	23.81	1 1/8	1 1/8	3/16	4.76	3/16	4.76	1 1/4	31.75
19/32	15.08	5/8	15.87	25/32	19.84	1 1/8	1 1/8	3/16	4.76	3/16	4.76	1 1/4	31.75

www.globaltungsten.com

B		E		D		M	A	L		T		C	
inch	mm	inch	mm	inch	mm	inch	inch	inch	mm	inch	mm	inch	mm
19/32	15.08	5/8	15.87	13/16	20.64	1 1/8	1 1/8	3/16	4.76	3/16	4.76	1 1/4	31.75
19/32	15.08	5/8	15.87	27/32	21.43	1 1/8	1 1/8	3/16	4.76	3/16	4.76	1 1/4	31.75
19/32	15.08	5/8	15.87	7/8	22.22	1 1/8	1 1/8	3/16	4.76	3/16	4.76	1 1/4	31.75
19/32	15.08	5/8	15.87	29/32	23.02	1 1/8	1 1/8	3/16	4.76	3/16	4.76	1 1/4	31.75
19/32	15.08	5/8	15.87	15/16	23.81	1 1/8	1 1/8	3/16	4.76	3/16	4.76	1 1/4	31.75
5/8	15.87	5/8	15.87	25/32	19.84	1 1/8	1 1/8	3/16	4.76	3/16	4.76	1 1/4	31.75
5/8	15.87	5/8	15.87	13/16	20.64	1 1/8	1 1/8	3/16	4.76	3/16	4.76	1 1/4	31.75
5/8	15.87	5/8	15.87	27/32	21.43	1 1/8	1 1/8	3/16	4.76	3/16	4.76	1 1/4	31.75
5/8	15.87	5/8	15.87	7/8	22.22	1 1/8	1 1/8	3/16	4.76	3/16	4.76	1 1/4	31.75
5/8	15.87	5/8	15.87	29/32	23.02	1 1/8	1 1/8	3/16	4.76	3/16	4.76	1 1/4	31.75
5/8	15.87	5/8	15.87	15/16	23.81	1 1/8	1 1/8	3/16	4.76	3/16	4.76	1 1/4	31.75
3/16	4.76	1/2	12.70	21/32	16.67	1 1/8	1 1/8	3/16	4.76	3/16	4.76	1 1/4	31.75
3/16	4.76	1/2	12.70	11/16	17.46	1 1/8	1 1/8	3/16	4.76	3/16	4.76	1 1/4	31.75
3/16	4.76	1/2	12.70	23/32	18.26	1 1/8	1 1/8	3/16	4.76	3/16	4.76	1 1/4	31.75
3/16	4.76	1/2	12.70	3/4	19.05	1 1/8	1 1/8	3/16	4.76	3/16	4.76	1 1/4	31.75
3/16	4.76	1/2	12.70	25/32	19.84	1 1/8	1 1/8	3/16	4.76	3/16	4.76	1 1/4	31.75
3/16	4.76	1/2	12.70	13/16	20.64	1 1/8	1 1/8	3/16	4.76	3/16	4.76	1 1/4	31.75
3/16	4.76	1/2	12.70	27/32	21.43	1 1/8	1 1/8	3/16	4.76	3/16	4.76	1 1/4	31.75
3/16	4.76	1/2	12.70	7/8	22.22	1 1/8	1 1/8	3/16	4.76	3/16	4.76	1 1/4	31.75
3/16	4.76	1/2	12.70	29/32	23.02	1 1/8	1 1/8	3/16	4.76	3/16	4.76	1 1/4	31.75
3/16	4.76	1/2	12.70	15/16	23.81	1 1/8	1 1/8	3/16	4.76	3/16	4.76	1 1/4	31.75
7/32	5.56	1/2	12.70	21/32	16.67	1 1/8	1 1/8	3/16	4.76	3/16	4.76	1 1/4	31.75
7/32	5.56	1/2	12.70	11/16	17.46	1 1/8	1 1/8	3/16	4.76	3/16	4.76	1 1/4	31.75
7/32	5.56	1/2	12.70	23/32	18.26	1 1/8	1 1/8	3/16	4.76	3/16	4.76	1 1/4	31.75
7/32	5.56	1/2	12.70	3/4	19.05	1 1/8	1 1/8	3/16	4.76	3/16	4.76	1 1/4	31.75
7/32	5.56	1/2	12.70	25/32	19.84	1 1/8	1 1/8	3/16	4.76	3/16	4.76	1 1/4	31.75
7/32	5.56	1/2	12.70	13/16	20.64	1 1/8	1 1/8	3/16	4.76	3/16	4.76	1 1/4	31.75
7/32	5.56	1/2	12.70	27/32	21.43	1 1/8	1 1/8	3/16	4.76	3/16	4.76	1 1/4	31.75
7/32	5.56	1/2	12.70	7/8	22.22	1 1/8	1 1/8	3/16	4.76	3/16	4.76	1 1/4	31.75
7/32	5.56	1/2	12.70	29/32	23.02	1 1/8	1 1/8	3/16	4.76	3/16	4.76	1 1/4	31.75
7/32	5.56	1/2	12.70	15/16	23.81	1 1/8	1 1/8	3/16	4.76	3/16	4.76	1 1/4	31.75
1/4	6.35	1/2	12.70	21/32	16.67	1 1/8	1 1/8	3/16	4.76	3/16	4.76	1 1/4	31.75
1/4	6.35	1/2	12.70	11/16	17.46	1 1/8	1 1/8	3/16	4.76	3/16	4.76	1 1/4	31.75
1/4	6.35	1/2	12.70	23/32	18.26	1 1/8	1 1/8	3/16	4.76	3/16	4.76	1 1/4	31.75
1/4	6.35	1/2	12.70	3/4	19.05	1 1/8	1 1/8	3/16	4.76	3/16	4.76	1 1/4	31.75
1/4	6.35	1/2	12.70	25/32	19.84	1 1/8	1 1/8	3/16	4.76	3/16	4.76	1 1/4	31.75
1/4	6.35	1/2	12.70	13/16	20.64	1 1/8	1 1/8	3/16	4.76	3/16	4.76	1 1/4	31.75
1/4	6.35	1/2	12.70	27/32	21.43	1 1/8	1 1/8	3/16	4.76	3/16	4.76	1 1/4	31.75
1/4	6.35	1/2	12.70	7/8	22.22	1 1/8	1 1/8	3/16	4.76	3/16	4.76	1 1/4	31.75
1/4	6.35	1/2	12.70	29/32	23.02	1 1/8	1 1/8	3/16	4.76	3/16	4.76	1 1/4	31.75
1/4	6.35	1/2	12.70	15/16	23.81	1 1/8	1 1/8	3/16	4.76	3/16	4.76	1 1/4	31.75
9/32	7.14	1/2	12.70	21/32	16.67	1 1/8	1 1/8	3/16	4.76	3/16	4.76	1 1/4	31.75
9/32	7.14	1/2	12.70	11/16	17.46	1 1/8	1 1/8	3/16	4.76	3/16	4.76	1 1/4	31.75
9/32	7.14	1/2	12.70	23/32	18.26	1 1/8	1 1/8	3/16	4.76	3/16	4.76	1 1/4	31.75
9/32	7.14	1/2	12.70	3/4	19.05	1 1/8	1 1/8	3/16	4.76	3/16	4.76	1 1/4	31.75

www.globaltungsters.com

B		E		D		M	A	L		T		C	
inch	mm	inch	mm	inch	mm	inch	inch	inch	mm	inch	mm	inch	mm
9/32	7.14	1/2	12.70	25/32	19.84	1 1/8	1 1/8	3/16	4.76	3/16	4.76	1 1/4	31.75
9/32	7.14	1/2	12.70	13/16	20.64	1 1/8	1 1/8	3/16	4.76	3/16	4.76	1 1/4	31.75
9/32	7.14	1/2	12.70	27/32	21.43	1 1/8	1 1/8	3/16	4.76	3/16	4.76	1 1/4	31.75
9/32	7.14	1/2	12.70	7/8	22.22	1 1/8	1 1/8	3/16	4.76	3/16	4.76	1 1/4	31.75
9/32	7.14	1/2	12.70	29/32	23.02	1 1/8	1 1/8	3/16	4.76	3/16	4.76	1 1/4	31.75
9/32	7.14	1/2	12.70	15/16	23.81	1 1/8	1 1/8	3/16	4.76	3/16	4.76	1 1/4	31.75
5/16	7.94	1/2	12.70	21/32	16.67	1 1/8	1 1/8	3/16	4.76	3/16	4.76	1 1/4	31.75
5/16	7.94	1/2	12.70	11/16	17.46	1 1/8	1 1/8	3/16	4.76	3/16	4.76	1 1/4	31.75
5/16	7.94	1/2	12.70	23/32	18.26	1 1/8	1 1/8	3/16	4.76	3/16	4.76	1 1/4	31.75
5/16	7.94	1/2	12.70	3/4	19.05	1 1/8	1 1/8	3/16	4.76	3/16	4.76	1 1/4	31.75
5/16	7.94	1/2	12.70	25/32	19.84	1 1/8	1 1/8	3/16	4.76	3/16	4.76	1 1/4	31.75
5/16	7.94	1/2	12.70	13/16	20.64	1 1/8	1 1/8	3/16	4.76	3/16	4.76	1 1/4	31.75
5/16	7.94	1/2	12.70	27/32	21.43	1 1/8	1 1/8	3/16	4.76	3/16	4.76	1 1/4	31.75
5/16	7.94	1/2	12.70	7/8	22.22	1 1/8	1 1/8	3/16	4.76	3/16	4.76	1 1/4	31.75
5/16	7.94	1/2	12.70	29/32	23.02	1 1/8	1 1/8	3/16	4.76	3/16	4.76	1 1/4	31.75
5/16	7.94	1/2	12.70	15/16	23.81	1 1/8	1 1/8	3/16	4.76	3/16	4.76	1 1/4	31.75
11/32	8.73	1/2	12.70	21/32	16.67	1 1/8	1 1/8	3/16	4.76	3/16	4.76	1 1/4	31.75
11/32	8.73	1/2	12.70	11/16	17.46	1 1/8	1 1/8	3/16	4.76	3/16	4.76	1 1/4	31.75
11/32	8.73	1/2	12.70	23/32	18.26	1 1/8	1 1/8	3/16	4.76	3/16	4.76	1 1/4	31.75
11/32	8.73	1/2	12.70	3/4	19.05	1 1/8	1 1/8	3/16	4.76	3/16	4.76	1 1/4	31.75
11/32	8.73	1/2	12.70	25/32	19.84	1 1/8	1 1/8	3/16	4.76	3/16	4.76	1 1/4	31.75
11/32	8.73	1/2	12.70	13/16	20.64	1 1/8	1 1/8	3/16	4.76	3/16	4.76	1 1/4	31.75
11/32	8.73	1/2	12.70	27/32	21.43	1 1/8	1 1/8	3/16	4.76	3/16	4.76	1 1/4	31.75
11/32	8.73	1/2	12.70	7/8	22.22	1 1/8	1 1/8	3/16	4.76	3/16	4.76	1 1/4	31.75
11/32	8.73	1/2	12.70	29/32	23.02	1 1/8	1 1/8	3/16	4.76	3/16	4.76	1 1/4	31.75
11/32	8.73	1/2	12.70	15/16	23.81	1 1/8	1 1/8	3/16	4.76	3/16	4.76	1 1/4	31.75
3/8	9.52	1/2	12.70	21/32	16.67	1 1/8	1 1/8	3/16	4.76	3/16	4.76	1 1/4	31.75
3/8	9.52	1/2	12.70	11/16	17.46	1 1/8	1 1/8	3/16	4.76	3/16	4.76	1 1/4	31.75
3/8	9.52	1/2	12.70	23/32	18.26	1 1/8	1 1/8	3/16	4.76	3/16	4.76	1 1/4	31.75
3/8	9.52	1/2	12.70	3/4	19.05	1 1/8	1 1/8	3/16	4.76	3/16	4.76	1 1/4	31.75
3/8	9.52	1/2	12.70	25/32	19.84	1 1/8	1 1/8	3/16	4.76	3/16	4.76	1 1/4	31.75
3/8	9.52	1/2	12.70	13/16	20.64	1 1/8	1 1/8	3/16	4.76	3/16	4.76	1 1/4	31.75
3/8	9.52	1/2	12.70	27/32	21.43	1 1/8	1 1/8	3/16	4.76	3/16	4.76	1 1/4	31.75
3/8	9.52	1/2	12.70	7/8	22.22	1 1/8	1 1/8	3/16	4.76	3/16	4.76	1 1/4	31.75
3/8	9.52	1/2	12.70	29/32	23.02	1 1/8	1 1/8	3/16	4.76	3/16	4.76	1 1/4	31.75
3/8	9.52	1/2	12.70	15/16	23.81	1 1/8	1 1/8	3/16	4.76	3/16	4.76	1 1/4	31.75
13/32	10.32	1/2	12.70	21/32	16.67	1 1/8	1 1/8	3/16	4.76	3/16	4.76	1 1/4	31.75
13/32	10.32	1/2	12.70	11/16	17.46	1 1/8	1 1/8	3/16	4.76	3/16	4.76	1 1/4	31.75
13/32	10.32	1/2	12.70	23/32	18.26	1 1/8	1 1/8	3/16	4.76	3/16	4.76	1 1/4	31.75
13/32	10.32	1/2	12.70	3/4	19.05	1 1/8	1 1/8	3/16	4.76	3/16	4.76	1 1/4	31.75
13/32	10.32	1/2	12.70	25/32	19.84	1 1/8	1 1/8	3/16	4.76	3/16	4.76	1 1/4	31.75
13/32	10.32	1/2	12.70	13/16	20.64	1 1/8	1 1/8	3/16	4.76	3/16	4.76	1 1/4	31.75
13/32	10.32	1/2	12.70	27/32	21.43	1 1/8	1 1/8	3/16	4.76	3/16	4.76	1 1/4	31.75
13/32	10.32	1/2	12.70	7/8	22.22	1 1/8	1 1/8	3/16	4.76	3/16	4.76	1 1/4	31.75
13/32	10.32	1/2	12.70	29/32	23.02	1 1/8	1 1/8	3/16	4.76	3/16	4.76	1 1/4	31.75

www.globaltungsteels.com

B		E		D		M	A	L		T		C	
inch	mm	inch	mm	inch	mm	inch	inch	inch	mm	inch	mm	inch	mm
13/32	10.32	1/2	12.70	15/16	23.81	1 1/8	1 1/8	3/16	4.76	3/16	4.76	1 1/4	31.75
7/16	11.11	1/2	12.70	21/32	16.67	1 1/8	1 1/8	3/16	4.76	3/16	4.76	1 1/4	31.75
7/16	11.11	1/2	12.70	11/16	17.46	1 1/8	1 1/8	3/16	4.76	3/16	4.76	1 1/4	31.75
7/16	11.11	1/2	12.70	23/32	18.26	1 1/8	1 1/8	3/16	4.76	3/16	4.76	1 1/4	31.75
7/16	11.11	1/2	12.70	3/4	19.05	1 1/8	1 1/8	3/16	4.76	3/16	4.76	1 1/4	31.75
7/16	11.11	1/2	12.70	25/32	19.84	1 1/8	1 1/8	3/16	4.76	3/16	4.76	1 1/4	31.75
7/16	11.11	1/2	12.70	13/16	20.64	1 1/8	1 1/8	3/16	4.76	3/16	4.76	1 1/4	31.75
7/16	11.11	1/2	12.70	27/32	21.43	1 1/8	1 1/8	3/16	4.76	3/16	4.76	1 1/4	31.75
7/16	11.11	1/2	12.70	7/8	22.22	1 1/8	1 1/8	3/16	4.76	3/16	4.76	1 1/4	31.75
7/16	11.11	1/2	12.70	29/32	23.02	1 1/8	1 1/8	3/16	4.76	3/16	4.76	1 1/4	31.75
7/16	11.11	1/2	12.70	15/16	23.81	1 1/8	1 1/8	3/16	4.76	3/16	4.76	1 1/4	31.75
15/32	11.91	1/2	12.70	21/32	16.67	1 1/8	1 1/8	3/16	4.76	3/16	4.76	1 1/4	31.75
15/32	11.91	1/2	12.70	11/16	17.46	1 1/8	1 1/8	3/16	4.76	3/16	4.76	1 1/4	31.75
15/32	11.91	1/2	12.70	23/32	18.26	1 1/8	1 1/8	3/16	4.76	3/16	4.76	1 1/4	31.75
15/32	11.91	1/2	12.70	3/4	19.05	1 1/8	1 1/8	3/16	4.76	3/16	4.76	1 1/4	31.75
15/32	11.91	1/2	12.70	25/32	19.84	1 1/8	1 1/8	3/16	4.76	3/16	4.76	1 1/4	31.75
15/32	11.91	1/2	12.70	13/16	20.64	1 1/8	1 1/8	3/16	4.76	3/16	4.76	1 1/4	31.75
15/32	11.91	1/2	12.70	27/32	21.43	1 1/8	1 1/8	3/16	4.76	3/16	4.76	1 1/4	31.75
15/32	11.91	1/2	12.70	7/8	22.22	1 1/8	1 1/8	3/16	4.76	3/16	4.76	1 1/4	31.75
15/32	11.91	1/2	12.70	29/32	23.02	1 1/8	1 1/8	3/16	4.76	3/16	4.76	1 1/4	31.75
15/32	11.91	1/2	12.70	15/16	23.81	1 1/8	1 1/8	3/16	4.76	3/16	4.76	1 1/4	31.75
1/2	12.70	1/2	12.70	21/32	16.67	1 1/8	1 1/8	3/16	4.76	3/16	4.76	1 1/4	31.75
1/2	12.70	1/2	12.70	11/16	17.46	1 1/8	1 1/8	3/16	4.76	3/16	4.76	1 1/4	31.75
1/2	12.70	1/2	12.70	23/32	18.26	1 1/8	1 1/8	3/16	4.76	3/16	4.76	1 1/4	31.75
1/2	12.70	1/2	12.70	3/4	19.05	1 1/8	1 1/8	3/16	4.76	3/16	4.76	1 1/4	31.75
1/2	12.70	1/2	12.70	25/32	19.84	1 1/8	1 1/8	3/16	4.76	3/16	4.76	1 1/4	31.75
1/2	12.70	1/2	12.70	13/16	20.64	1 1/8	1 1/8	3/16	4.76	3/16	4.76	1 1/4	31.75
1/2	12.70	1/2	12.70	27/32	21.43	1 1/8	1 1/8	3/16	4.76	3/16	4.76	1 1/4	31.75
1/2	12.70	1/2	12.70	7/8	22.22	1 1/8	1 1/8	3/16	4.76	3/16	4.76	1 1/4	31.75
1/2	12.70	1/2	12.70	29/32	23.02	1 1/8	1 1/8	3/16	4.76	3/16	4.76	1 1/4	31.75
1/2	12.70	1/2	12.70	15/16	23.81	1 1/8	1 1/8	3/16	4.76	3/16	4.76	1 1/4	31.75
3/16	4.76	3/8	9.52	19/32	15.08	1 1/8	1 1/8	3/16	4.76	3/16	4.76	1 1/4	31.75
3/16	4.76	3/8	9.52	5/8	15.87	1 1/8	1 1/8	3/16	4.76	3/16	4.76	1 1/4	31.75
3/16	4.76	3/8	9.52	21/32	16.67	1 1/8	1 1/8	3/16	4.76	3/16	4.76	1 1/4	31.75
3/16	4.76	3/8	9.52	11/16	17.46	1 1/8	1 1/8	3/16	4.76	3/16	4.76	1 1/4	31.75
3/16	4.76	3/8	9.52	23/32	18.26	1 1/8	1 1/8	3/16	4.76	3/16	4.76	1 1/4	31.75
3/16	4.76	3/8	9.52	3/4	19.05	1 1/8	1 1/8	3/16	4.76	3/16	4.76	1 1/4	31.75
3/16	4.76	3/8	9.52	25/32	19.84	1 1/8	1 1/8	3/16	4.76	3/16	4.76	1 1/4	31.75
3/16	4.76	3/8	9.52	13/16	20.64	1 1/8	1 1/8	3/16	4.76	3/16	4.76	1 1/4	31.75
3/16	4.76	3/8	9.52	27/32	21.43	1 1/8	1 1/8	3/16	4.76	3/16	4.76	1 1/4	31.75
3/16	4.76	3/8	9.52	7/8	22.22	1 1/8	1 1/8	3/16	4.76	3/16	4.76	1 1/4	31.75
3/16	4.76	3/8	9.52	29/32	23.02	1 1/8	1 1/8	3/16	4.76	3/16	4.76	1 1/4	31.75
3/16	4.76	3/8	9.52	15/16	23.81	1 1/8	1 1/8	3/16	4.76	3/16	4.76	1 1/4	31.75
7/32	5.56	3/8	9.52	19/32	15.08	1 1/8	1 1/8	3/16	4.76	3/16	4.76	1 1/4	31.75
7/32	5.56	3/8	9.52	5/8	15.87	1 1/8	1 1/8	3/16	4.76	3/16	4.76	1 1/4	31.75

www.globaltungsteels.com

B		E		D		M	A	L		T		C	
inch	mm	inch	mm	inch	mm	inch	inch	inch	mm	inch	mm	inch	mm
7/32	5.56	3/8	9.52	21/32	16.67	1 1/8	1 1/8	3/16	4.76	3/16	4.76	1 1/4	31.75
7/32	5.56	3/8	9.52	11/16	17.46	1 1/8	1 1/8	3/16	4.76	3/16	4.76	1 1/4	31.75
7/32	5.56	3/8	9.52	23/32	18.26	1 1/8	1 1/8	3/16	4.76	3/16	4.76	1 1/4	31.75
7/32	5.56	3/8	9.52	3/4	19.05	1 1/8	1 1/8	3/16	4.76	3/16	4.76	1 1/4	31.75
7/32	5.56	3/8	9.52	25/32	19.84	1 1/8	1 1/8	3/16	4.76	3/16	4.76	1 1/4	31.75
7/32	5.56	3/8	9.52	13/16	20.64	1 1/8	1 1/8	3/16	4.76	3/16	4.76	1 1/4	31.75
7/32	5.56	3/8	9.52	27/32	21.43	1 1/8	1 1/8	3/16	4.76	3/16	4.76	1 1/4	31.75
7/32	5.56	3/8	9.52	7/8	22.22	1 1/8	1 1/8	3/16	4.76	3/16	4.76	1 1/4	31.75
7/32	5.56	3/8	9.52	29/32	23.02	1 1/8	1 1/8	3/16	4.76	3/16	4.76	1 1/4	31.75
7/32	5.56	3/8	9.52	15/16	23.81	1 1/8	1 1/8	3/16	4.76	3/16	4.76	1 1/4	31.75
1/4	6.35	3/8	9.52	19/32	15.08	1 1/8	1 1/8	3/16	4.76	3/16	4.76	1 1/4	31.75
1/4	6.35	3/8	9.52	5/8	15.87	1 1/8	1 1/8	3/16	4.76	3/16	4.76	1 1/4	31.75
1/4	6.35	3/8	9.52	21/32	16.67	1 1/8	1 1/8	3/16	4.76	3/16	4.76	1 1/4	31.75
1/4	6.35	3/8	9.52	11/16	17.46	1 1/8	1 1/8	3/16	4.76	3/16	4.76	1 1/4	31.75
1/4	6.35	3/8	9.52	23/32	18.26	1 1/8	1 1/8	3/16	4.76	3/16	4.76	1 1/4	31.75
1/4	6.35	3/8	9.52	3/4	19.05	1 1/8	1 1/8	3/16	4.76	3/16	4.76	1 1/4	31.75
1/4	6.35	3/8	9.52	25/32	19.84	1 1/8	1 1/8	3/16	4.76	3/16	4.76	1 1/4	31.75
1/4	6.35	3/8	9.52	13/16	20.64	1 1/8	1 1/8	3/16	4.76	3/16	4.76	1 1/4	31.75
1/4	6.35	3/8	9.52	27/32	21.43	1 1/8	1 1/8	3/16	4.76	3/16	4.76	1 1/4	31.75
1/4	6.35	3/8	9.52	7/8	22.22	1 1/8	1 1/8	3/16	4.76	3/16	4.76	1 1/4	31.75
1/4	6.35	3/8	9.52	29/32	23.02	1 1/8	1 1/8	3/16	4.76	3/16	4.76	1 1/4	31.75
1/4	6.35	3/8	9.52	15/16	23.81	1 1/8	1 1/8	3/16	4.76	3/16	4.76	1 1/4	31.75
9/32	7.14	3/8	9.52	19/32	15.08	1 1/8	1 1/8	3/16	4.76	3/16	4.76	1 1/4	31.75
9/32	7.14	3/8	9.52	5/8	15.87	1 1/8	1 1/8	3/16	4.76	3/16	4.76	1 1/4	31.75
9/32	7.14	3/8	9.52	21/32	16.67	1 1/8	1 1/8	3/16	4.76	3/16	4.76	1 1/4	31.75
9/32	7.14	3/8	9.52	11/16	17.46	1 1/8	1 1/8	3/16	4.76	3/16	4.76	1 1/4	31.75
9/32	7.14	3/8	9.52	23/32	18.26	1 1/8	1 1/8	3/16	4.76	3/16	4.76	1 1/4	31.75
9/32	7.14	3/8	9.52	3/4	19.05	1 1/8	1 1/8	3/16	4.76	3/16	4.76	1 1/4	31.75
9/32	7.14	3/8	9.52	25/32	19.84	1 1/8	1 1/8	3/16	4.76	3/16	4.76	1 1/4	31.75
9/32	7.14	3/8	9.52	13/16	20.64	1 1/8	1 1/8	3/16	4.76	3/16	4.76	1 1/4	31.75
9/32	7.14	3/8	9.52	27/32	21.43	1 1/8	1 1/8	3/16	4.76	3/16	4.76	1 1/4	31.75
9/32	7.14	3/8	9.52	7/8	22.22	1 1/8	1 1/8	3/16	4.76	3/16	4.76	1 1/4	31.75
9/32	7.14	3/8	9.52	29/32	23.02	1 1/8	1 1/8	3/16	4.76	3/16	4.76	1 1/4	31.75
9/32	7.14	3/8	9.52	15/16	23.81	1 1/8	1 1/8	3/16	4.76	3/16	4.76	1 1/4	31.75
5/16	7.94	3/8	9.52	19/32	15.08	1 1/8	1 1/8	3/16	4.76	3/16	4.76	1 1/4	31.75
5/16	7.94	3/8	9.52	5/8	15.87	1 1/8	1 1/8	3/16	4.76	3/16	4.76	1 1/4	31.75
5/16	7.94	3/8	9.52	21/32	16.67	1 1/8	1 1/8	3/16	4.76	3/16	4.76	1 1/4	31.75
5/16	7.94	3/8	9.52	11/16	17.46	1 1/8	1 1/8	3/16	4.76	3/16	4.76	1 1/4	31.75
5/16	7.94	3/8	9.52	23/32	18.26	1 1/8	1 1/8	3/16	4.76	3/16	4.76	1 1/4	31.75
5/16	7.94	3/8	9.52	3/4	19.05	1 1/8	1 1/8	3/16	4.76	3/16	4.76	1 1/4	31.75
5/16	7.94	3/8	9.52	25/32	19.84	1 1/8	1 1/8	3/16	4.76	3/16	4.76	1 1/4	31.75
5/16	7.94	3/8	9.52	13/16	20.64	1 1/8	1 1/8	3/16	4.76	3/16	4.76	1 1/4	31.75
5/16	7.94	3/8	9.52	27/32	21.43	1 1/8	1 1/8	3/16	4.76	3/16	4.76	1 1/4	31.75
5/16	7.94	3/8	9.52	7/8	22.22	1 1/8	1 1/8	3/16	4.76	3/16	4.76	1 1/4	31.75
5/16	7.94	3/8	9.52	29/32	23.02	1 1/8	1 1/8	3/16	4.76	3/16	4.76	1 1/4	31.75

www.globaltungsteins.com

B		E		D		M	A	L		T		C	
inch	mm	inch	mm	inch	mm	inch	inch	inch	mm	inch	mm	inch	mm
5/16	7.94	3/8	9.52	15/16	23.81	1 1/8	1 1/8	3/16	4.76	3/16	4.76	1 1/4	31.75
11/32	8.73	3/8	9.52	19/32	15.08	1 1/8	1 1/8	3/16	4.76	3/16	4.76	1 1/4	31.75
11/32	8.73	3/8	9.52	5/8	15.87	1 1/8	1 1/8	3/16	4.76	3/16	4.76	1 1/4	31.75
11/32	8.73	3/8	9.52	21/32	16.67	1 1/8	1 1/8	3/16	4.76	3/16	4.76	1 1/4	31.75
11/32	8.73	3/8	9.52	11/16	17.46	1 1/8	1 1/8	3/16	4.76	3/16	4.76	1 1/4	31.75
11/32	8.73	3/8	9.52	23/32	18.26	1 1/8	1 1/8	3/16	4.76	3/16	4.76	1 1/4	31.75
11/32	8.73	3/8	9.52	3/4	19.05	1 1/8	1 1/8	3/16	4.76	3/16	4.76	1 1/4	31.75
11/32	8.73	3/8	9.52	25/32	19.84	1 1/8	1 1/8	3/16	4.76	3/16	4.76	1 1/4	31.75
11/32	8.73	3/8	9.52	13/16	20.64	1 1/8	1 1/8	3/16	4.76	3/16	4.76	1 1/4	31.75
11/32	8.73	3/8	9.52	27/32	21.43	1 1/8	1 1/8	3/16	4.76	3/16	4.76	1 1/4	31.75
11/32	8.73	3/8	9.52	7/8	22.22	1 1/8	1 1/8	3/16	4.76	3/16	4.76	1 1/4	31.75
11/32	8.73	3/8	9.52	29/32	23.02	1 1/8	1 1/8	3/16	4.76	3/16	4.76	1 1/4	31.75
11/32	8.73	3/8	9.52	15/16	23.81	1 1/8	1 1/8	3/16	4.76	3/16	4.76	1 1/4	31.75
3/8	9.52	3/8	9.52	19/32	15.08	1 1/8	1 1/8	3/16	4.76	3/16	4.76	1 1/4	31.75
3/8	9.52	3/8	9.52	5/8	15.87	1 1/8	1 1/8	3/16	4.76	3/16	4.76	1 1/4	31.75
3/8	9.52	3/8	9.52	21/32	16.67	1 1/8	1 1/8	3/16	4.76	3/16	4.76	1 1/4	31.75
3/8	9.52	3/8	9.52	11/16	17.46	1 1/8	1 1/8	3/16	4.76	3/16	4.76	1 1/4	31.75
3/8	9.52	3/8	9.52	23/32	18.26	1 1/8	1 1/8	3/16	4.76	3/16	4.76	1 1/4	31.75
3/8	9.52	3/8	9.52	3/4	19.05	1 1/8	1 1/8	3/16	4.76	3/16	4.76	1 1/4	31.75
3/8	9.52	3/8	9.52	25/32	19.84	1 1/8	1 1/8	3/16	4.76	3/16	4.76	1 1/4	31.75
3/8	9.52	3/8	9.52	13/16	20.64	1 1/8	1 1/8	3/16	4.76	3/16	4.76	1 1/4	31.75
3/8	9.52	3/8	9.52	27/32	21.43	1 1/8	1 1/8	3/16	4.76	3/16	4.76	1 1/4	31.75
3/8	9.52	3/8	9.52	7/8	22.22	1 1/8	1 1/8	3/16	4.76	3/16	4.76	1 1/4	31.75
3/8	9.52	3/8	9.52	29/32	23.02	1 1/8	1 1/8	3/16	4.76	3/16	4.76	1 1/4	31.75
3/8	9.52	3/8	9.52	15/16	23.81	1 1/8	1 1/8	3/16	4.76	3/16	4.76	1 1/4	31.75
3/16	4.76	5/8	15.87	25/32	19.84	1	1	3/16	4.76	3/16	4.76	1 1/4	31.75
3/16	4.76	5/8	15.87	13/16	20.64	1	1	3/16	4.76	3/16	4.76	1 1/4	31.75
3/16	4.76	5/8	15.87	27/32	21.43	1	1	3/16	4.76	3/16	4.76	1 1/4	31.75
7/32	5.56	5/8	15.87	25/32	19.84	1	1	3/16	4.76	3/16	4.76	1 1/4	31.75
7/32	5.56	5/8	15.87	13/16	20.64	1	1	3/16	4.76	3/16	4.76	1 1/4	31.75
7/32	5.56	5/8	15.87	27/32	21.43	1	1	3/16	4.76	3/16	4.76	1 1/4	31.75
1/4	6.35	5/8	15.87	25/32	19.84	1	1	3/16	4.76	3/16	4.76	1 1/4	31.75
1/4	6.35	5/8	15.87	13/16	20.64	1	1	3/16	4.76	3/16	4.76	1 1/4	31.75
1/4	6.35	5/8	15.87	27/32	21.43	1	1	3/16	4.76	3/16	4.76	1 1/4	31.75
9/32	7.14	5/8	15.87	25/32	19.84	1	1	3/16	4.76	3/16	4.76	1 1/4	31.75
9/32	7.14	5/8	15.87	13/16	20.64	1	1	3/16	4.76	3/16	4.76	1 1/4	31.75
9/32	7.14	5/8	15.87	27/32	21.43	1	1	3/16	4.76	3/16	4.76	1 1/4	31.75
5/16	7.94	5/8	15.87	25/32	19.84	1	1	3/16	4.76	3/16	4.76	1 1/4	31.75
5/16	7.94	5/8	15.87	13/16	20.64	1	1	3/16	4.76	3/16	4.76	1 1/4	31.75
5/16	7.94	5/8	15.87	27/32	21.43	1	1	3/16	4.76	3/16	4.76	1 1/4	31.75
11/32	8.73	5/8	15.87	25/32	19.84	1	1	3/16	4.76	3/16	4.76	1 1/4	31.75
11/32	8.73	5/8	15.87	13/16	20.64	1	1	3/16	4.76	3/16	4.76	1 1/4	31.75
11/32	8.73	5/8	15.87	27/32	21.43	1	1	3/16	4.76	3/16	4.76	1 1/4	31.75
3/8	9.52	5/8	15.87	25/32	19.84	1	1	3/16	4.76	3/16	4.76	1 1/4	31.75
3/8	9.52	5/8	15.87	13/16	20.64	1	1	3/16	4.76	3/16	4.76	1 1/4	31.75

www.globaltungsten.com

B		E		D		M	A	L		T		C	
inch	mm	inch	mm	inch	mm	inch	inch	inch	mm	inch	mm	inch	mm
3/8	9.52	5/8	15.87	27/32	21.43	1	1	3/16	4.76	3/16	4.76	1 1/4	31.75
13/32	10.32	5/8	15.87	25/32	19.84	1	1	3/16	4.76	3/16	4.76	1 1/4	31.75
13/32	10.32	5/8	15.87	13/16	20.64	1	1	3/16	4.76	3/16	4.76	1 1/4	31.75
13/32	10.32	5/8	15.87	27/32	21.43	1	1	3/16	4.76	3/16	4.76	1 1/4	31.75
7/16	11.11	5/8	15.87	25/32	19.84	1	1	3/16	4.76	3/16	4.76	1 1/4	31.75
7/16	11.11	5/8	15.87	13/16	20.64	1	1	3/16	4.76	3/16	4.76	1 1/4	31.75
7/16	11.11	5/8	15.87	27/32	21.43	1	1	3/16	4.76	3/16	4.76	1 1/4	31.75
15/32	11.91	5/8	15.87	25/32	19.84	1	1	3/16	4.76	3/16	4.76	1 1/4	31.75
15/32	11.91	5/8	15.87	13/16	20.64	1	1	3/16	4.76	3/16	4.76	1 1/4	31.75
15/32	11.91	5/8	15.87	27/32	21.43	1	1	3/16	4.76	3/16	4.76	1 1/4	31.75
1/2	12.70	5/8	15.87	25/32	19.84	1	1	3/16	4.76	3/16	4.76	1 1/4	31.75
1/2	12.70	5/8	15.87	13/16	20.64	1	1	3/16	4.76	3/16	4.76	1 1/4	31.75
1/2	12.70	5/8	15.87	27/32	21.43	1	1	3/16	4.76	3/16	4.76	1 1/4	31.75
17/32	13.49	5/8	15.87	25/32	19.84	1	1	3/16	4.76	3/16	4.76	1 1/4	31.75
17/32	13.49	5/8	15.87	13/16	20.64	1	1	3/16	4.76	3/16	4.76	1 1/4	31.75
17/32	13.49	5/8	15.87	27/32	21.43	1	1	3/16	4.76	3/16	4.76	1 1/4	31.75
9/16	14.29	5/8	15.87	25/32	19.84	1	1	3/16	4.76	3/16	4.76	1 1/4	31.75
9/16	14.29	5/8	15.87	13/16	20.64	1	1	3/16	4.76	3/16	4.76	1 1/4	31.75
9/16	14.29	5/8	15.87	27/32	21.43	1	1	3/16	4.76	3/16	4.76	1 1/4	31.75
19/32	15.08	5/8	15.87	25/32	19.84	1	1	3/16	4.76	3/16	4.76	1 1/4	31.75
19/32	15.08	5/8	15.87	13/16	20.64	1	1	3/16	4.76	3/16	4.76	1 1/4	31.75
19/32	15.08	5/8	15.87	27/32	21.43	1	1	3/16	4.76	3/16	4.76	1 1/4	31.75
5/8	15.87	5/8	15.87	25/32	19.84	1	1	3/16	4.76	3/16	4.76	1 1/4	31.75
5/8	15.87	5/8	15.87	13/16	20.64	1	1	3/16	4.76	3/16	4.76	1 1/4	31.75
5/8	15.87	5/8	15.87	27/32	21.43	1	1	3/16	4.76	3/16	4.76	1 1/4	31.75
3/16	4.76	1/2	12.70	21/32	16.67	1	1	3/16	4.76	3/16	4.76	1 1/4	31.75
3/16	4.76	1/2	12.70	11/16	17.46	1	1	3/16	4.76	3/16	4.76	1 1/4	31.75
3/16	4.76	1/2	12.70	23/32	18.26	1	1	3/16	4.76	3/16	4.76	1 1/4	31.75
3/16	4.76	1/2	12.70	3/4	19.05	1	1	3/16	4.76	3/16	4.76	1 1/4	31.75
3/16	4.76	1/2	12.70	25/32	19.84	1	1	3/16	4.76	3/16	4.76	1 1/4	31.75
3/16	4.76	1/2	12.70	13/16	20.64	1	1	3/16	4.76	3/16	4.76	1 1/4	31.75
3/16	4.76	1/2	12.70	27/32	21.43	1	1	3/16	4.76	3/16	4.76	1 1/4	31.75
7/32	5.56	1/2	12.70	21/32	16.67	1	1	3/16	4.76	3/16	4.76	1 1/4	31.75
7/32	5.56	1/2	12.70	11/16	17.46	1	1	3/16	4.76	3/16	4.76	1 1/4	31.75
7/32	5.56	1/2	12.70	23/32	18.26	1	1	3/16	4.76	3/16	4.76	1 1/4	31.75
7/32	5.56	1/2	12.70	3/4	19.05	1	1	3/16	4.76	3/16	4.76	1 1/4	31.75
7/32	5.56	1/2	12.70	25/32	19.84	1	1	3/16	4.76	3/16	4.76	1 1/4	31.75
7/32	5.56	1/2	12.70	13/16	20.64	1	1	3/16	4.76	3/16	4.76	1 1/4	31.75
7/32	5.56	1/2	12.70	27/32	21.43	1	1	3/16	4.76	3/16	4.76	1 1/4	31.75
1/4	6.35	1/2	12.70	21/32	16.67	1	1	3/16	4.76	3/16	4.76	1 1/4	31.75
1/4	6.35	1/2	12.70	11/16	17.46	1	1	3/16	4.76	3/16	4.76	1 1/4	31.75
1/4	6.35	1/2	12.70	23/32	18.26	1	1	3/16	4.76	3/16	4.76	1 1/4	31.75
1/4	6.35	1/2	12.70	3/4	19.05	1	1	3/16	4.76	3/16	4.76	1 1/4	31.75
1/4	6.35	1/2	12.70	25/32	19.84	1	1	3/16	4.76	3/16	4.76	1 1/4	31.75
1/4	6.35	1/2	12.70	13/16	20.64	1	1	3/16	4.76	3/16	4.76	1 1/4	31.75

www.globaltungsten.com

B		E		D		M	A	L		T		C	
inch	mm	inch	mm	inch	mm	inch	inch	inch	mm	inch	mm	inch	mm
1/4	6.35	1/2	12.70	27/32	21.43	1	1	3/16	4.76	3/16	4.76	1 1/4	31.75
9/32	7.14	1/2	12.70	21/32	16.67	1	1	3/16	4.76	3/16	4.76	1 1/4	31.75
9/32	7.14	1/2	12.70	11/16	17.46	1	1	3/16	4.76	3/16	4.76	1 1/4	31.75
9/32	7.14	1/2	12.70	23/32	18.26	1	1	3/16	4.76	3/16	4.76	1 1/4	31.75
9/32	7.14	1/2	12.70	3/4	19.05	1	1	3/16	4.76	3/16	4.76	1 1/4	31.75
9/32	7.14	1/2	12.70	25/32	19.84	1	1	3/16	4.76	3/16	4.76	1 1/4	31.75
9/32	7.14	1/2	12.70	13/16	20.64	1	1	3/16	4.76	3/16	4.76	1 1/4	31.75
9/32	7.14	1/2	12.70	27/32	21.43	1	1	3/16	4.76	3/16	4.76	1 1/4	31.75
5/16	7.94	1/2	12.70	21/32	16.67	1	1	3/16	4.76	3/16	4.76	1 1/4	31.75
5/16	7.94	1/2	12.70	11/16	17.46	1	1	3/16	4.76	3/16	4.76	1 1/4	31.75
5/16	7.94	1/2	12.70	23/32	18.26	1	1	3/16	4.76	3/16	4.76	1 1/4	31.75
5/16	7.94	1/2	12.70	3/4	19.05	1	1	3/16	4.76	3/16	4.76	1 1/4	31.75
5/16	7.94	1/2	12.70	25/32	19.84	1	1	3/16	4.76	3/16	4.76	1 1/4	31.75
5/16	7.94	1/2	12.70	13/16	20.64	1	1	3/16	4.76	3/16	4.76	1 1/4	31.75
5/16	7.94	1/2	12.70	27/32	21.43	1	1	3/16	4.76	3/16	4.76	1 1/4	31.75
11/32	8.73	1/2	12.70	21/32	16.67	1	1	3/16	4.76	3/16	4.76	1 1/4	31.75
11/32	8.73	1/2	12.70	11/16	17.46	1	1	3/16	4.76	3/16	4.76	1 1/4	31.75
11/32	8.73	1/2	12.70	23/32	18.26	1	1	3/16	4.76	3/16	4.76	1 1/4	31.75
11/32	8.73	1/2	12.70	3/4	19.05	1	1	3/16	4.76	3/16	4.76	1 1/4	31.75
11/32	8.73	1/2	12.70	25/32	19.84	1	1	3/16	4.76	3/16	4.76	1 1/4	31.75
11/32	8.73	1/2	12.70	13/16	20.64	1	1	3/16	4.76	3/16	4.76	1 1/4	31.75
11/32	8.73	1/2	12.70	27/32	21.43	1	1	3/16	4.76	3/16	4.76	1 1/4	31.75
3/8	9.52	1/2	12.70	21/32	16.67	1	1	3/16	4.76	3/16	4.76	1 1/4	31.75
3/8	9.52	1/2	12.70	11/16	17.46	1	1	3/16	4.76	3/16	4.76	1 1/4	31.75
3/8	9.52	1/2	12.70	23/32	18.26	1	1	3/16	4.76	3/16	4.76	1 1/4	31.75
3/8	9.52	1/2	12.70	3/4	19.05	1	1	3/16	4.76	3/16	4.76	1 1/4	31.75
3/8	9.52	1/2	12.70	25/32	19.84	1	1	3/16	4.76	3/16	4.76	1 1/4	31.75
3/8	9.52	1/2	12.70	13/16	20.64	1	1	3/16	4.76	3/16	4.76	1 1/4	31.75
3/8	9.52	1/2	12.70	27/32	21.43	1	1	3/16	4.76	3/16	4.76	1 1/4	31.75
13/32	10.32	1/2	12.70	21/32	16.67	1	1	3/16	4.76	3/16	4.76	1 1/4	31.75
13/32	10.32	1/2	12.70	11/16	17.46	1	1	3/16	4.76	3/16	4.76	1 1/4	31.75
13/32	10.32	1/2	12.70	23/32	18.26	1	1	3/16	4.76	3/16	4.76	1 1/4	31.75
13/32	10.32	1/2	12.70	3/4	19.05	1	1	3/16	4.76	3/16	4.76	1 1/4	31.75
13/32	10.32	1/2	12.70	25/32	19.84	1	1	3/16	4.76	3/16	4.76	1 1/4	31.75
13/32	10.32	1/2	12.70	13/16	20.64	1	1	3/16	4.76	3/16	4.76	1 1/4	31.75
13/32	10.32	1/2	12.70	27/32	21.43	1	1	3/16	4.76	3/16	4.76	1 1/4	31.75
7/16	11.11	1/2	12.70	21/32	16.67	1	1	3/16	4.76	3/16	4.76	1 1/4	31.75
7/16	11.11	1/2	12.70	11/16	17.46	1	1	3/16	4.76	3/16	4.76	1 1/4	31.75
7/16	11.11	1/2	12.70	23/32	18.26	1	1	3/16	4.76	3/16	4.76	1 1/4	31.75
7/16	11.11	1/2	12.70	3/4	19.05	1	1	3/16	4.76	3/16	4.76	1 1/4	31.75
7/16	11.11	1/2	12.70	25/32	19.84	1	1	3/16	4.76	3/16	4.76	1 1/4	31.75
7/16	11.11	1/2	12.70	13/16	20.64	1	1	3/16	4.76	3/16	4.76	1 1/4	31.75
7/16	11.11	1/2	12.70	27/32	21.43	1	1	3/16	4.76	3/16	4.76	1 1/4	31.75
15/32	11.91	1/2	12.70	21/32	16.67	1	1	3/16	4.76	3/16	4.76	1 1/4	31.75
15/32	11.91	1/2	12.70	11/16	17.46	1	1	3/16	4.76	3/16	4.76	1 1/4	31.75

www.globaltungsten.com

B		E		D		M	A	L		T		C	
inch	mm	inch	mm	inch	mm	inch	inch	inch	mm	inch	mm	inch	mm
15/32	11.91	1/2	12.70	23/32	18.26	1	1	3/16	4.76	3/16	4.76	1 1/4	31.75
15/32	11.91	1/2	12.70	3/4	19.05	1	1	3/16	4.76	3/16	4.76	1 1/4	31.75
15/32	11.91	1/2	12.70	25/32	19.84	1	1	3/16	4.76	3/16	4.76	1 1/4	31.75
15/32	11.91	1/2	12.70	13/16	20.64	1	1	3/16	4.76	3/16	4.76	1 1/4	31.75
15/32	11.91	1/2	12.70	27/32	21.43	1	1	3/16	4.76	3/16	4.76	1 1/4	31.75
1/2	12.70	1/2	12.70	21/32	16.67	1	1	3/16	4.76	3/16	4.76	1 1/4	31.75
1/2	12.70	1/2	12.70	11/16	17.46	1	1	3/16	4.76	3/16	4.76	1 1/4	31.75
1/2	12.70	1/2	12.70	23/32	18.26	1	1	3/16	4.76	3/16	4.76	1 1/4	31.75
1/2	12.70	1/2	12.70	3/4	19.05	1	1	3/16	4.76	3/16	4.76	1 1/4	31.75
1/2	12.70	1/2	12.70	25/32	19.84	1	1	3/16	4.76	3/16	4.76	1 1/4	31.75
1/2	12.70	1/2	12.70	13/16	20.64	1	1	3/16	4.76	3/16	4.76	1 1/4	31.75
1/2	12.70	1/2	12.70	27/32	21.43	1	1	3/16	4.76	3/16	4.76	1 1/4	31.75
3/16	4.76	3/8	9.52	19/32	15.08	1	1	3/16	4.76	3/16	4.76	1 1/4	31.75
3/16	4.76	3/8	9.52	5/8	15.87	1	1	3/16	4.76	3/16	4.76	1 1/4	31.75
3/16	4.76	3/8	9.52	21/32	16.67	1	1	3/16	4.76	3/16	4.76	1 1/4	31.75
3/16	4.76	3/8	9.52	11/16	17.46	1	1	3/16	4.76	3/16	4.76	1 1/4	31.75
3/16	4.76	3/8	9.52	23/32	18.26	1	1	3/16	4.76	3/16	4.76	1 1/4	31.75
3/16	4.76	3/8	9.52	3/4	19.05	1	1	3/16	4.76	3/16	4.76	1 1/4	31.75
3/16	4.76	3/8	9.52	25/32	19.84	1	1	3/16	4.76	3/16	4.76	1 1/4	31.75
3/16	4.76	3/8	9.52	13/16	20.64	1	1	3/16	4.76	3/16	4.76	1 1/4	31.75
3/16	4.76	3/8	9.52	27/32	21.43	1	1	3/16	4.76	3/16	4.76	1 1/4	31.75
7/32	5.56	3/8	9.52	19/32	15.08	1	1	3/16	4.76	3/16	4.76	1 1/4	31.75
7/32	5.56	3/8	9.52	5/8	15.87	1	1	3/16	4.76	3/16	4.76	1 1/4	31.75
7/32	5.56	3/8	9.52	21/32	16.67	1	1	3/16	4.76	3/16	4.76	1 1/4	31.75
7/32	5.56	3/8	9.52	11/16	17.46	1	1	3/16	4.76	3/16	4.76	1 1/4	31.75
7/32	5.56	3/8	9.52	23/32	18.26	1	1	3/16	4.76	3/16	4.76	1 1/4	31.75
7/32	5.56	3/8	9.52	3/4	19.05	1	1	3/16	4.76	3/16	4.76	1 1/4	31.75
7/32	5.56	3/8	9.52	25/32	19.84	1	1	3/16	4.76	3/16	4.76	1 1/4	31.75
7/32	5.56	3/8	9.52	13/16	20.64	1	1	3/16	4.76	3/16	4.76	1 1/4	31.75
7/32	5.56	3/8	9.52	27/32	21.43	1	1	3/16	4.76	3/16	4.76	1 1/4	31.75
1/4	6.35	3/8	9.52	19/32	15.08	1	1	3/16	4.76	3/16	4.76	1 1/4	31.75
1/4	6.35	3/8	9.52	5/8	15.87	1	1	3/16	4.76	3/16	4.76	1 1/4	31.75
1/4	6.35	3/8	9.52	21/32	16.67	1	1	3/16	4.76	3/16	4.76	1 1/4	31.75
1/4	6.35	3/8	9.52	11/16	17.46	1	1	3/16	4.76	3/16	4.76	1 1/4	31.75
1/4	6.35	3/8	9.52	23/32	18.26	1	1	3/16	4.76	3/16	4.76	1 1/4	31.75
1/4	6.35	3/8	9.52	3/4	19.05	1	1	3/16	4.76	3/16	4.76	1 1/4	31.75
1/4	6.35	3/8	9.52	25/32	19.84	1	1	3/16	4.76	3/16	4.76	1 1/4	31.75
1/4	6.35	3/8	9.52	13/16	20.64	1	1	3/16	4.76	3/16	4.76	1 1/4	31.75
1/4	6.35	3/8	9.52	27/32	21.43	1	1	3/16	4.76	3/16	4.76	1 1/4	31.75
9/32	7.14	3/8	9.52	19/32	15.08	1	1	3/16	4.76	3/16	4.76	1 1/4	31.75
9/32	7.14	3/8	9.52	5/8	15.87	1	1	3/16	4.76	3/16	4.76	1 1/4	31.75
9/32	7.14	3/8	9.52	21/32	16.67	1	1	3/16	4.76	3/16	4.76	1 1/4	31.75
9/32	7.14	3/8	9.52	11/16	17.46	1	1	3/16	4.76	3/16	4.76	1 1/4	31.75
9/32	7.14	3/8	9.52	23/32	18.26	1	1	3/16	4.76	3/16	4.76	1 1/4	31.75
9/32	7.14	3/8	9.52	3/4	19.05	1	1	3/16	4.76	3/16	4.76	1 1/4	31.75

www.globaltungsten.com

B		E		D		M	A	L		T		C	
inch	mm	inch	mm	inch	mm	inch	inch	inch	mm	inch	mm	inch	mm
9/32	7.14	3/8	9.52	25/32	19.84	1	1	3/16	4.76	3/16	4.76	1 1/4	31.75
9/32	7.14	3/8	9.52	13/16	20.64	1	1	3/16	4.76	3/16	4.76	1 1/4	31.75
9/32	7.14	3/8	9.52	27/32	21.43	1	1	3/16	4.76	3/16	4.76	1 1/4	31.75
5/16	7.94	3/8	9.52	19/32	15.08	1	1	3/16	4.76	3/16	4.76	1 1/4	31.75
5/16	7.94	3/8	9.52	5/8	15.87	1	1	3/16	4.76	3/16	4.76	1 1/4	31.75
5/16	7.94	3/8	9.52	21/32	16.67	1	1	3/16	4.76	3/16	4.76	1 1/4	31.75
5/16	7.94	3/8	9.52	11/16	17.46	1	1	3/16	4.76	3/16	4.76	1 1/4	31.75
5/16	7.94	3/8	9.52	23/32	18.26	1	1	3/16	4.76	3/16	4.76	1 1/4	31.75
5/16	7.94	3/8	9.52	3/4	19.05	1	1	3/16	4.76	3/16	4.76	1 1/4	31.75
5/16	7.94	3/8	9.52	25/32	19.84	1	1	3/16	4.76	3/16	4.76	1 1/4	31.75
5/16	7.94	3/8	9.52	13/16	20.64	1	1	3/16	4.76	3/16	4.76	1 1/4	31.75
5/16	7.94	3/8	9.52	27/32	21.43	1	1	3/16	4.76	3/16	4.76	1 1/4	31.75
11/32	8.73	3/8	9.52	19/32	15.08	1	1	3/16	4.76	3/16	4.76	1 1/4	31.75
11/32	8.73	3/8	9.52	5/8	15.87	1	1	3/16	4.76	3/16	4.76	1 1/4	31.75
11/32	8.73	3/8	9.52	21/32	16.67	1	1	3/16	4.76	3/16	4.76	1 1/4	31.75
11/32	8.73	3/8	9.52	11/16	17.46	1	1	3/16	4.76	3/16	4.76	1 1/4	31.75
11/32	8.73	3/8	9.52	23/32	18.26	1	1	3/16	4.76	3/16	4.76	1 1/4	31.75
11/32	8.73	3/8	9.52	3/4	19.05	1	1	3/16	4.76	3/16	4.76	1 1/4	31.75
11/32	8.73	3/8	9.52	25/32	19.84	1	1	3/16	4.76	3/16	4.76	1 1/4	31.75
11/32	8.73	3/8	9.52	13/16	20.64	1	1	3/16	4.76	3/16	4.76	1 1/4	31.75
11/32	8.73	3/8	9.52	27/32	21.43	1	1	3/16	4.76	3/16	4.76	1 1/4	31.75
3/8	9.52	3/8	9.52	19/32	15.08	1	1	3/16	4.76	3/16	4.76	1 1/4	31.75
3/8	9.52	3/8	9.52	5/8	15.87	1	1	3/16	4.76	3/16	4.76	1 1/4	31.75
3/8	9.52	3/8	9.52	21/32	16.67	1	1	3/16	4.76	3/16	4.76	1 1/4	31.75
3/8	9.52	3/8	9.52	11/16	17.46	1	1	3/16	4.76	3/16	4.76	1 1/4	31.75
3/8	9.52	3/8	9.52	23/32	18.26	1	1	3/16	4.76	3/16	4.76	1 1/4	31.75
3/8	9.52	3/8	9.52	3/4	19.05	1	1	3/16	4.76	3/16	4.76	1 1/4	31.75
3/8	9.52	3/8	9.52	25/32	19.84	1	1	3/16	4.76	3/16	4.76	1 1/4	31.75
3/8	9.52	3/8	9.52	13/16	20.64	1	1	3/16	4.76	3/16	4.76	1 1/4	31.75
3/8	9.52	3/8	9.52	27/32	21.43	1	1	3/16	4.76	3/16	4.76	1 1/4	31.75
3/16	4.76	1/2	12.70	21/32	16.67	7/8	7/8	3/16	4.76	3/16	4.76	1 1/8	28.57
3/16	4.76	1/2	12.70	11/16	17.46	7/8	7/8	3/16	4.76	3/16	4.76	1 1/8	28.57
3/16	4.76	1/2	12.70	23/32	18.26	7/8	7/8	3/16	4.76	3/16	4.76	1 1/8	28.57
3/16	4.76	1/2	12.70	3/4	19.05	7/8	7/8	3/16	4.76	3/16	4.76	1 1/8	28.57
7/32	5.56	1/2	12.70	21/32	16.67	7/8	7/8	3/16	4.76	3/16	4.76	1 1/8	28.57
7/32	5.56	1/2	12.70	11/16	17.46	7/8	7/8	3/16	4.76	3/16	4.76	1 1/8	28.57
7/32	5.56	1/2	12.70	23/32	18.26	7/8	7/8	3/16	4.76	3/16	4.76	1 1/8	28.57
7/32	5.56	1/2	12.70	3/4	19.05	7/8	7/8	3/16	4.76	3/16	4.76	1 1/8	28.57
1/4	6.35	1/2	12.70	21/32	16.67	7/8	7/8	3/16	4.76	3/16	4.76	1 1/8	28.57
1/4	6.35	1/2	12.70	11/16	17.46	7/8	7/8	3/16	4.76	3/16	4.76	1 1/8	28.57
1/4	6.35	1/2	12.70	23/32	18.26	7/8	7/8	3/16	4.76	3/16	4.76	1 1/8	28.57
1/4	6.35	1/2	12.70	3/4	19.05	7/8	7/8	3/16	4.76	3/16	4.76	1 1/8	28.57
9/32	7.14	1/2	12.70	21/32	16.67	7/8	7/8	3/16	4.76	3/16	4.76	1 1/8	28.57
9/32	7.14	1/2	12.70	11/16	17.46	7/8	7/8	3/16	4.76	3/16	4.76	1 1/8	28.57
9/32	7.14	1/2	12.70	23/32	18.26	7/8	7/8	3/16	4.76	3/16	4.76	1 1/8	28.57

www.globaltungsten.com

B		E		D		M	A	L		T		C	
inch	mm	inch	mm	inch	mm	inch	inch	inch	mm	inch	mm	inch	mm
9/32	7.14	1/2	12.70	3/4	19.05	7/8	7/8	3/16	4.76	3/16	4.76	1 1/8	28.57
5/16	7.94	1/2	12.70	21/32	16.67	7/8	7/8	3/16	4.76	3/16	4.76	1 1/8	28.57
5/16	7.94	1/2	12.70	11/16	17.46	7/8	7/8	3/16	4.76	3/16	4.76	1 1/8	28.57
5/16	7.94	1/2	12.70	23/32	18.26	7/8	7/8	3/16	4.76	3/16	4.76	1 1/8	28.57
5/16	7.94	1/2	12.70	3/4	19.05	7/8	7/8	3/16	4.76	3/16	4.76	1 1/8	28.57
11/32	8.73	1/2	12.70	21/32	16.67	7/8	7/8	3/16	4.76	3/16	4.76	1 1/8	28.57
11/32	8.73	1/2	12.70	11/16	17.46	7/8	7/8	3/16	4.76	3/16	4.76	1 1/8	28.57
11/32	8.73	1/2	12.70	23/32	18.26	7/8	7/8	3/16	4.76	3/16	4.76	1 1/8	28.57
11/32	8.73	1/2	12.70	3/4	19.05	7/8	7/8	3/16	4.76	3/16	4.76	1 1/8	28.57
3/8	9.52	1/2	12.70	21/32	16.67	7/8	7/8	3/16	4.76	3/16	4.76	1 1/8	28.57
3/8	9.52	1/2	12.70	11/16	17.46	7/8	7/8	3/16	4.76	3/16	4.76	1 1/8	28.57
3/8	9.52	1/2	12.70	23/32	18.26	7/8	7/8	3/16	4.76	3/16	4.76	1 1/8	28.57
3/8	9.52	1/2	12.70	3/4	19.05	7/8	7/8	3/16	4.76	3/16	4.76	1 1/8	28.57
13/32	10.32	1/2	12.70	21/32	16.67	7/8	7/8	3/16	4.76	3/16	4.76	1 1/8	28.57
13/32	10.32	1/2	12.70	11/16	17.46	7/8	7/8	3/16	4.76	3/16	4.76	1 1/8	28.57
13/32	10.32	1/2	12.70	23/32	18.26	7/8	7/8	3/16	4.76	3/16	4.76	1 1/8	28.57
13/32	10.32	1/2	12.70	3/4	19.05	7/8	7/8	3/16	4.76	3/16	4.76	1 1/8	28.57
7/16	11.11	1/2	12.70	21/32	16.67	7/8	7/8	3/16	4.76	3/16	4.76	1 1/8	28.57
7/16	11.11	1/2	12.70	11/16	17.46	7/8	7/8	3/16	4.76	3/16	4.76	1 1/8	28.57
7/16	11.11	1/2	12.70	23/32	18.26	7/8	7/8	3/16	4.76	3/16	4.76	1 1/8	28.57
7/16	11.11	1/2	12.70	3/4	19.05	7/8	7/8	3/16	4.76	3/16	4.76	1 1/8	28.57
15/32	11.91	1/2	12.70	21/32	16.67	7/8	7/8	3/16	4.76	3/16	4.76	1 1/8	28.57
15/32	11.91	1/2	12.70	11/16	17.46	7/8	7/8	3/16	4.76	3/16	4.76	1 1/8	28.57
15/32	11.91	1/2	12.70	23/32	18.26	7/8	7/8	3/16	4.76	3/16	4.76	1 1/8	28.57
15/32	11.91	1/2	12.70	3/4	19.05	7/8	7/8	3/16	4.76	3/16	4.76	1 1/8	28.57
1/2	12.70	1/2	12.70	21/32	16.67	7/8	7/8	3/16	4.76	3/16	4.76	1 1/8	28.57
1/2	12.70	1/2	12.70	11/16	17.46	7/8	7/8	3/16	4.76	3/16	4.76	1 1/8	28.57
1/2	12.70	1/2	12.70	23/32	18.26	7/8	7/8	3/16	4.76	3/16	4.76	1 1/8	28.57
1/2	12.70	1/2	12.70	3/4	19.05	7/8	7/8	3/16	4.76	3/16	4.76	1 1/8	28.57
3/16	4.76	3/8	9.52	19/32	15.08	7/8	7/8	3/16	4.76	3/16	4.76	1 1/8	28.57
3/16	4.76	3/8	9.52	5/8	15.87	7/8	7/8	3/16	4.76	3/16	4.76	1 1/8	28.57
3/16	4.76	3/8	9.52	21/32	16.67	7/8	7/8	3/16	4.76	3/16	4.76	1 1/8	28.57
3/16	4.76	3/8	9.52	11/16	17.46	7/8	7/8	3/16	4.76	3/16	4.76	1 1/8	28.57
3/16	4.76	3/8	9.52	23/32	18.26	7/8	7/8	3/16	4.76	3/16	4.76	1 1/8	28.57
3/16	4.76	3/8	9.52	3/4	19.05	7/8	7/8	3/16	4.76	3/16	4.76	1 1/8	28.57
7/32	5.56	3/8	9.52	19/32	15.08	7/8	7/8	3/16	4.76	3/16	4.76	1 1/8	28.57
7/32	5.56	3/8	9.52	5/8	15.87	7/8	7/8	3/16	4.76	3/16	4.76	1 1/8	28.57
7/32	5.56	3/8	9.52	21/32	16.67	7/8	7/8	3/16	4.76	3/16	4.76	1 1/8	28.57
7/32	5.56	3/8	9.52	11/16	17.46	7/8	7/8	3/16	4.76	3/16	4.76	1 1/8	28.57
7/32	5.56	3/8	9.52	23/32	18.26	7/8	7/8	3/16	4.76	3/16	4.76	1 1/8	28.57
7/32	5.56	3/8	9.52	3/4	19.05	7/8	7/8	3/16	4.76	3/16	4.76	1 1/8	28.57
1/4	6.35	3/8	9.52	19/32	15.08	7/8	7/8	3/16	4.76	3/16	4.76	1 1/8	28.57
1/4	6.35	3/8	9.52	5/8	15.87	7/8	7/8	3/16	4.76	3/16	4.76	1 1/8	28.57
1/4	6.35	3/8	9.52	21/32	16.67	7/8	7/8	3/16	4.76	3/16	4.76	1 1/8	28.57
1/4	6.35	3/8	9.52	11/16	17.46	7/8	7/8	3/16	4.76	3/16	4.76	1 1/8	28.57

www.globaltungsten.com

B		E		D		M	A	L		T		C	
inch	mm	inch	mm	inch	mm	inch	inch	inch	mm	inch	mm	inch	mm
1/4	6.35	3/8	9.52	23/32	18.26	7/8	7/8	3/16	4.76	3/16	4.76	1 1/8	28.57
1/4	6.35	3/8	9.52	3/4	19.05	7/8	7/8	3/16	4.76	3/16	4.76	1 1/8	28.57
9/32	7.14	3/8	9.52	19/32	15.08	7/8	7/8	3/16	4.76	3/16	4.76	1 1/8	28.57
9/32	7.14	3/8	9.52	5/8	15.87	7/8	7/8	3/16	4.76	3/16	4.76	1 1/8	28.57
9/32	7.14	3/8	9.52	21/32	16.67	7/8	7/8	3/16	4.76	3/16	4.76	1 1/8	28.57
9/32	7.14	3/8	9.52	11/16	17.46	7/8	7/8	3/16	4.76	3/16	4.76	1 1/8	28.57
9/32	7.14	3/8	9.52	23/32	18.26	7/8	7/8	3/16	4.76	3/16	4.76	1 1/8	28.57
9/32	7.14	3/8	9.52	3/4	19.05	7/8	7/8	3/16	4.76	3/16	4.76	1 1/8	28.57
5/16	7.94	3/8	9.52	19/32	15.08	7/8	7/8	3/16	4.76	3/16	4.76	1 1/8	28.57
5/16	7.94	3/8	9.52	5/8	15.87	7/8	7/8	3/16	4.76	3/16	4.76	1 1/8	28.57
5/16	7.94	3/8	9.52	21/32	16.67	7/8	7/8	3/16	4.76	3/16	4.76	1 1/8	28.57
5/16	7.94	3/8	9.52	11/16	17.46	7/8	7/8	3/16	4.76	3/16	4.76	1 1/8	28.57
5/16	7.94	3/8	9.52	23/32	18.26	7/8	7/8	3/16	4.76	3/16	4.76	1 1/8	28.57
5/16	7.94	3/8	9.52	3/4	19.05	7/8	7/8	3/16	4.76	3/16	4.76	1 1/8	28.57
11/32	8.73	3/8	9.52	19/32	15.08	7/8	7/8	3/16	4.76	3/16	4.76	1 1/8	28.57
11/32	8.73	3/8	9.52	5/8	15.87	7/8	7/8	3/16	4.76	3/16	4.76	1 1/8	28.57
11/32	8.73	3/8	9.52	21/32	16.67	7/8	7/8	3/16	4.76	3/16	4.76	1 1/8	28.57
11/32	8.73	3/8	9.52	11/16	17.46	7/8	7/8	3/16	4.76	3/16	4.76	1 1/8	28.57
11/32	8.73	3/8	9.52	23/32	18.26	7/8	7/8	3/16	4.76	3/16	4.76	1 1/8	28.57
11/32	8.73	3/8	9.52	3/4	19.05	7/8	7/8	3/16	4.76	3/16	4.76	1 1/8	28.57
3/8	9.52	3/8	9.52	19/32	15.08	7/8	7/8	3/16	4.76	3/16	4.76	1 1/8	28.57
3/8	9.52	3/8	9.52	5/8	15.87	7/8	7/8	3/16	4.76	3/16	4.76	1 1/8	28.57
3/8	9.52	3/8	9.52	21/32	16.67	7/8	7/8	3/16	4.76	3/16	4.76	1 1/8	28.57
3/8	9.52	3/8	9.52	11/16	17.46	7/8	7/8	3/16	4.76	3/16	4.76	1 1/8	28.57
3/8	9.52	3/8	9.52	23/32	18.26	7/8	7/8	3/16	4.76	3/16	4.76	1 1/8	28.57
3/8	9.52	3/8	9.52	3/4	19.05	7/8	7/8	3/16	4.76	3/16	4.76	1 1/8	28.57
3/16	4.76	3/8	9.52	19/32	15.08	3/4	3/4	3/16	4.76	3/16	4.76	1	24.40
3/16	4.76	3/8	9.52	5/8	15.87	3/4	3/4	3/16	4.76	3/16	4.76	1	24.40
7/32	5.56	3/8	9.52	19/32	15.08	3/4	3/4	3/16	4.76	3/16	4.76	1	24.40
7/32	5.56	3/8	9.52	5/8	15.87	3/4	3/4	3/16	4.76	3/16	4.76	1	24.40
1/4	6.35	3/8	9.52	19/32	15.08	3/4	3/4	3/16	4.76	3/16	4.76	1	24.40
1/4	6.35	3/8	9.52	5/8	15.87	3/4	3/4	3/16	4.76	3/16	4.76	1	24.40
9/32	7.14	3/8	9.52	19/32	15.08	3/4	3/4	3/16	4.76	3/16	4.76	1	24.40
9/32	7.14	3/8	9.52	5/8	15.87	3/4	3/4	3/16	4.76	3/16	4.76	1	24.40
5/16	7.94	3/8	9.52	19/32	15.08	3/4	3/4	3/16	4.76	3/16	4.76	1	24.40
5/16	7.94	3/8	9.52	5/8	15.87	3/4	3/4	3/16	4.76	3/16	4.76	1	24.40
11/32	8.73	3/8	9.52	19/32	15.08	3/4	3/4	3/16	4.76	3/16	4.76	1	24.40
11/32	8.73	3/8	9.52	5/8	15.87	3/4	3/4	3/16	4.76	3/16	4.76	1	24.40
3/8	9.52	3/8	9.52	19/32	15.08	3/4	3/4	3/16	4.76	3/16	4.76	1	24.40
3/8	9.52	3/8	9.52	5/8	15.87	3/4	3/4	3/16	4.76	3/16	4.76	1	24.40
3/16	4.76	1 1/8	28.57	1 3/8	34.92	1 3/4	1 3/4	7/32	5.56	7/32	5.56	1 5/8	41.27
7/32	5.56	1 1/8	28.57	1 3/8	34.92	1 3/4	1 3/4	7/32	5.56	7/32	5.56	1 5/8	41.27
1/4	6.35	1 1/8	28.57	1 3/8	34.92	1 3/4	1 3/4	7/32	5.56	7/32	5.56	1 5/8	41.27
9/32	7.14	1 1/8	28.57	1 3/8	34.92	1 3/4	1 3/4	7/32	5.56	7/32	5.56	1 5/8	41.27
5/16	7.94	1 1/8	28.57	1 3/8	34.92	1 3/4	1 3/4	7/32	5.56	7/32	5.56	1 5/8	41.27

www.globaltungsten.com

B		E		D		M	A	L		T		C	
inch	mm	inch	mm	inch	mm	inch	inch	inch	mm	inch	mm	inch	mm
11/32	8.73	1 1/8	28.57	1 3/8	34.92	1 3/4	1 3/4	7/32	5.56	7/32	5.56	1 5/8	41.27
3/8	9.52	1 1/8	28.57	1 3/8	34.92	1 3/4	1 3/4	7/32	5.56	7/32	5.56	1 5/8	41.27
13/32	10.32	1 1/8	28.57	1 3/8	34.92	1 3/4	1 3/4	7/32	5.56	7/32	5.56	1 5/8	41.27
7/16	11.11	1 1/8	28.57	1 3/8	34.92	1 3/4	1 3/4	7/32	5.56	7/32	5.56	1 5/8	41.27
15/32	11.91	1 1/8	28.57	1 3/8	34.92	1 3/4	1 3/4	7/32	5.56	7/32	5.56	1 5/8	41.27
1/2	12.70	1 1/8	28.57	1 3/8	34.92	1 3/4	1 3/4	7/32	5.56	7/32	5.56	1 5/8	41.27
17/32	13.49	1 1/8	28.57	1 3/8	34.92	1 3/4	1 3/4	7/32	5.56	7/32	5.56	1 5/8	41.27
9/16	14.29	1 1/8	28.57	1 3/8	34.92	1 3/4	1 3/4	7/32	5.56	7/32	5.56	1 5/8	41.27
19/32	15.08	1 1/8	28.57	1 3/8	34.92	1 3/4	1 3/4	7/32	5.56	7/32	5.56	1 5/8	41.27
5/8	15.87	1 1/8	28.57	1 3/8	34.92	1 3/4	1 3/4	7/32	5.56	7/32	5.56	1 5/8	41.27
21/32	16.67	1 1/8	28.57	1 3/8	34.92	1 3/4	1 3/4	7/32	5.56	7/32	5.56	1 5/8	41.27
11/16	17.46	1 1/8	28.57	1 3/8	34.92	1 3/4	1 3/4	7/32	5.56	7/32	5.56	1 5/8	41.27
23/32	18.26	1 1/8	28.57	1 3/8	34.92	1 3/4	1 3/4	7/32	5.56	7/32	5.56	1 5/8	41.27
3/4	19.05	1 1/8	28.57	1 3/8	34.92	1 3/4	1 3/4	7/32	5.56	7/32	5.56	1 5/8	41.27
25/32	19.84	1 1/8	28.57	1 3/8	34.92	1 3/4	1 3/4	7/32	5.56	7/32	5.56	1 5/8	41.27
13/16	20.64	1 1/8	28.57	1 3/8	34.92	1 3/4	1 3/4	7/32	5.56	7/32	5.56	1 5/8	41.27
27/32	21.43	1 1/8	28.57	1 3/8	34.92	1 3/4	1 3/4	7/32	5.56	7/32	5.56	1 5/8	41.27
7/8	22.22	1 1/8	28.57	1 3/8	34.92	1 3/4	1 3/4	7/32	5.56	7/32	5.56	1 5/8	41.27
29/32	23.02	1 1/8	28.57	1 3/8	34.92	1 3/4	1 3/4	7/32	5.56	7/32	5.56	1 5/8	41.27
15/16	23.81	1 1/8	28.57	1 3/8	34.92	1 3/4	1 3/4	7/32	5.56	7/32	5.56	1 5/8	41.27
31/32	24.61	1 1/8	28.57	1 3/8	34.92	1 3/4	1 3/4	7/32	5.56	7/32	5.56	1 5/8	41.27
1	25.40	1 1/8	28.57	1 3/8	34.92	1 3/4	1 3/4	7/32	5.56	7/32	5.56	1 5/8	41.27
3/16	4.76	1 1/8	28.57	1 1/2	38.10	1 3/4	1 3/4	7/32	5.56	7/32	5.56	1 5/8	41.27
7/32	5.56	1 1/8	28.57	1 1/2	38.10	1 3/4	1 3/4	7/32	5.56	7/32	5.56	1 5/8	41.27
1/4	6.35	1 1/8	28.57	1 1/2	38.10	1 3/4	1 3/4	7/32	5.56	7/32	5.56	1 5/8	41.27
9/32	7.14	1 1/8	28.57	1 1/2	38.10	1 3/4	1 3/4	7/32	5.56	7/32	5.56	1 5/8	41.27
5/16	7.94	1 1/8	28.57	1 1/2	38.10	1 3/4	1 3/4	7/32	5.56	7/32	5.56	1 5/8	41.27
11/32	8.73	1 1/8	28.57	1 1/2	38.10	1 3/4	1 3/4	7/32	5.56	7/32	5.56	1 5/8	41.27
3/8	9.52	1 1/8	28.57	1 1/2	38.10	1 3/4	1 3/4	7/32	5.56	7/32	5.56	1 5/8	41.27
13/32	10.32	1 1/8	28.57	1 1/2	38.10	1 3/4	1 3/4	7/32	5.56	7/32	5.56	1 5/8	41.27
7/16	11.11	1 1/8	28.57	1 1/2	38.10	1 3/4	1 3/4	7/32	5.56	7/32	5.56	1 5/8	41.27
15/32	11.91	1 1/8	28.57	1 1/2	38.10	1 3/4	1 3/4	7/32	5.56	7/32	5.56	1 5/8	41.27
1/2	12.70	1 1/8	28.57	1 1/2	38.10	1 3/4	1 3/4	7/32	5.56	7/32	5.56	1 5/8	41.27
17/32	13.49	1 1/8	28.57	1 1/2	38.10	1 3/4	1 3/4	7/32	5.56	7/32	5.56	1 5/8	41.27
9/16	14.29	1 1/8	28.57	1 1/2	38.10	1 3/4	1 3/4	7/32	5.56	7/32	5.56	1 5/8	41.27
19/32	15.08	1 1/8	28.57	1 1/2	38.10	1 3/4	1 3/4	7/32	5.56	7/32	5.56	1 5/8	41.27
5/8	15.87	1 1/8	28.57	1 1/2	38.10	1 3/4	1 3/4	7/32	5.56	7/32	5.56	1 5/8	41.27
21/32	16.67	1 1/8	28.57	1 1/2	38.10	1 3/4	1 3/4	7/32	5.56	7/32	5.56	1 5/8	41.27
11/16	17.46	1 1/8	28.57	1 1/2	38.10	1 3/4	1 3/4	7/32	5.56	7/32	5.56	1 5/8	41.27
23/32	18.26	1 1/8	28.57	1 1/2	38.10	1 3/4	1 3/4	7/32	5.56	7/32	5.56	1 5/8	41.27
3/4	19.05	1 1/8	28.57	1 1/2	38.10	1 3/4	1 3/4	7/32	5.56	7/32	5.56	1 5/8	41.27
25/32	19.84	1 1/8	28.57	1 1/2	38.10	1 3/4	1 3/4	7/32	5.56	7/32	5.56	1 5/8	41.27
13/16	20.64	1 1/8	28.57	1 1/2	38.10	1 3/4	1 3/4	7/32	5.56	7/32	5.56	1 5/8	41.27
27/32	21.43	1 1/8	28.57	1 1/2	38.10	1 3/4	1 3/4	7/32	5.56	7/32	5.56	1 5/8	41.27
7/8	22.22	1 1/8	28.57	1 1/2	38.10	1 3/4	1 3/4	7/32	5.56	7/32	5.56	1 5/8	41.27

www.globaltungsten.com

B		E		D		M	A	L		T		C	
inch	mm	inch	mm	inch	mm	inch	inch	inch	mm	inch	mm	inch	mm
29/32	23.02	1 1/8	28.57	1 1/2	38.10	1 3/4	1 3/4	7/32	5.56	7/32	5.56	1 5/8	41.27
15/16	23.81	1 1/8	28.57	1 1/2	38.10	1 3/4	1 3/4	7/32	5.56	7/32	5.56	1 5/8	41.27
31/32	24.61	1 1/8	28.57	1 1/2	38.10	1 3/4	1 3/4	7/32	5.56	7/32	5.56	1 5/8	41.27
1	25.40	1 1/8	28.57	1 1/2	38.10	1 3/4	1 3/4	7/32	5.56	7/32	5.56	1 5/8	41.27
3/16	4.76	1	25.40	1 1/4	31.75	1 3/4	1 3/4	7/32	5.56	7/32	5.56	1 5/8	41.27
7/32	5.56	1	25.40	1 1/4	31.75	1 3/4	1 3/4	7/32	5.56	7/32	5.56	1 5/8	41.27
1/4	6.35	1	25.40	1 1/4	31.75	1 3/4	1 3/4	7/32	5.56	7/32	5.56	1 5/8	41.27
9/32	7.14	1	25.40	1 1/4	31.75	1 3/4	1 3/4	7/32	5.56	7/32	5.56	1 5/8	41.27
5/16	7.94	1	25.40	1 1/4	31.75	1 3/4	1 3/4	7/32	5.56	7/32	5.56	1 5/8	41.27
11/32	8.73	1	25.40	1 1/4	31.75	1 3/4	1 3/4	7/32	5.56	7/32	5.56	1 5/8	41.27
3/8	9.52	1	25.40	1 1/4	31.75	1 3/4	1 3/4	7/32	5.56	7/32	5.56	1 5/8	41.27
13/32	10.32	1	25.40	1 1/4	31.75	1 3/4	1 3/4	7/32	5.56	7/32	5.56	1 5/8	41.27
7/16	11.11	1	25.40	1 1/4	31.75	1 3/4	1 3/4	7/32	5.56	7/32	5.56	1 5/8	41.27
15/32	11.91	1	25.40	1 1/4	31.75	1 3/4	1 3/4	7/32	5.56	7/32	5.56	1 5/8	41.27
1/2	12.70	1	25.40	1 1/4	31.75	1 3/4	1 3/4	7/32	5.56	7/32	5.56	1 5/8	41.27
17/32	13.49	1	25.40	1 1/4	31.75	1 3/4	1 3/4	7/32	5.56	7/32	5.56	1 5/8	41.27
9/16	14.29	1	25.40	1 1/4	31.75	1 3/4	1 3/4	7/32	5.56	7/32	5.56	1 5/8	41.27
19/32	15.08	1	25.40	1 1/4	31.75	1 3/4	1 3/4	7/32	5.56	7/32	5.56	1 5/8	41.27
5/8	15.87	1	25.40	1 1/4	31.75	1 3/4	1 3/4	7/32	5.56	7/32	5.56	1 5/8	41.27
21/32	16.67	1	25.40	1 1/4	31.75	1 3/4	1 3/4	7/32	5.56	7/32	5.56	1 5/8	41.27
11/16	17.46	1	25.40	1 1/4	31.75	1 3/4	1 3/4	7/32	5.56	7/32	5.56	1 5/8	41.27
23/32	18.26	1	25.40	1 1/4	31.75	1 3/4	1 3/4	7/32	5.56	7/32	5.56	1 5/8	41.27
3/4	19.05	1	25.40	1 1/4	31.75	1 3/4	1 3/4	7/32	5.56	7/32	5.56	1 5/8	41.27
25/32	19.84	1	25.40	1 1/4	31.75	1 3/4	1 3/4	7/32	5.56	7/32	5.56	1 5/8	41.27
13/16	20.64	1	25.40	1 1/4	31.75	1 3/4	1 3/4	7/32	5.56	7/32	5.56	1 5/8	41.27
27/32	21.43	1	25.40	1 1/4	31.75	1 3/4	1 3/4	7/32	5.56	7/32	5.56	1 5/8	41.27
7/8	22.22	1	25.40	1 1/4	31.75	1 3/4	1 3/4	7/32	5.56	7/32	5.56	1 5/8	41.27
29/32	23.02	1	25.40	1 1/4	31.75	1 3/4	1 3/4	7/32	5.56	7/32	5.56	1 5/8	41.27
15/16	23.81	1	25.40	1 1/4	31.75	1 3/4	1 3/4	7/32	5.56	7/32	5.56	1 5/8	41.27
31/32	24.61	1	25.40	1 1/4	31.75	1 3/4	1 3/4	7/32	5.56	7/32	5.56	1 5/8	41.27
1	25.40	1	25.40	1 1/4	31.75	1 3/4	1 3/4	7/32	5.56	7/32	5.56	1 5/8	41.27
3/16	4.76	1	25.40	1 3/8	34.92	1 3/4	1 3/4	7/32	5.56	7/32	5.56	1 5/8	41.27
7/32	5.56	1	25.40	1 3/8	34.92	1 3/4	1 3/4	7/32	5.56	7/32	5.56	1 5/8	41.27
1/4	6.35	1	25.40	1 3/8	34.92	1 3/4	1 3/4	7/32	5.56	7/32	5.56	1 5/8	41.27
9/32	7.14	1	25.40	1 3/8	34.92	1 3/4	1 3/4	7/32	5.56	7/32	5.56	1 5/8	41.27
5/16	7.94	1	25.40	1 3/8	34.92	1 3/4	1 3/4	7/32	5.56	7/32	5.56	1 5/8	41.27
11/32	8.73	1	25.40	1 3/8	34.92	1 3/4	1 3/4	7/32	5.56	7/32	5.56	1 5/8	41.27
3/8	9.52	1	25.40	1 3/8	34.92	1 3/4	1 3/4	7/32	5.56	7/32	5.56	1 5/8	41.27
13/32	10.32	1	25.40	1 3/8	34.92	1 3/4	1 3/4	7/32	5.56	7/32	5.56	1 5/8	41.27
7/16	11.11	1	25.40	1 3/8	34.92	1 3/4	1 3/4	7/32	5.56	7/32	5.56	1 5/8	41.27
15/32	11.91	1	25.40	1 3/8	34.92	1 3/4	1 3/4	7/32	5.56	7/32	5.56	1 5/8	41.27
1/2	12.70	1	25.40	1 3/8	34.92	1 3/4	1 3/4	7/32	5.56	7/32	5.56	1 5/8	41.27
17/32	13.49	1	25.40	1 3/8	34.92	1 3/4	1 3/4	7/32	5.56	7/32	5.56	1 5/8	41.27
9/16	14.29	1	25.40	1 3/8	34.92	1 3/4	1 3/4	7/32	5.56	7/32	5.56	1 5/8	41.27
19/32	15.08	1	25.40	1 3/8	34.92	1 3/4	1 3/4	7/32	5.56	7/32	5.56	1 5/8	41.27

www.globaltungsten.com

B		E		D		M	A	L		T		C	
inch	mm	inch	mm	inch	mm	inch	inch	inch	mm	inch	mm	inch	mm
5/8	15.87	1	25.40	1 3/8	34.92	1 3/4	1 3/4	7/32	5.56	7/32	5.56	1 5/8	41.27
21/32	16.67	1	25.40	1 3/8	34.92	1 3/4	1 3/4	7/32	5.56	7/32	5.56	1 5/8	41.27
11/16	17.46	1	25.40	1 3/8	34.92	1 3/4	1 3/4	7/32	5.56	7/32	5.56	1 5/8	41.27
23/32	18.26	1	25.40	1 3/8	34.92	1 3/4	1 3/4	7/32	5.56	7/32	5.56	1 5/8	41.27
3/4	19.05	1	25.40	1 3/8	34.92	1 3/4	1 3/4	7/32	5.56	7/32	5.56	1 5/8	41.27
25/32	19.84	1	25.40	1 3/8	34.92	1 3/4	1 3/4	7/32	5.56	7/32	5.56	1 5/8	41.27
13/16	20.64	1	25.40	1 3/8	34.92	1 3/4	1 3/4	7/32	5.56	7/32	5.56	1 5/8	41.27
27/32	21.43	1	25.40	1 3/8	34.92	1 3/4	1 3/4	7/32	5.56	7/32	5.56	1 5/8	41.27
7/8	22.22	1	25.40	1 3/8	34.92	1 3/4	1 3/4	7/32	5.56	7/32	5.56	1 5/8	41.27
29/32	23.02	1	25.40	1 3/8	34.92	1 3/4	1 3/4	7/32	5.56	7/32	5.56	1 5/8	41.27
15/16	23.81	1	25.40	1 3/8	34.92	1 3/4	1 3/4	7/32	5.56	7/32	5.56	1 5/8	41.27
31/32	24.61	1	25.40	1 3/8	34.92	1 3/4	1 3/4	7/32	5.56	7/32	5.56	1 5/8	41.27
1	25.40	1	25.40	1 3/8	34.92	1 3/4	1 3/4	7/32	5.56	7/32	5.56	1 5/8	41.27
3/16	4.76	1	25.40	1 1/2	38.10	1 3/4	1 3/4	7/32	5.56	7/32	5.56	1 5/8	41.27
7/32	5.56	1	25.40	1 1/2	38.10	1 3/4	1 3/4	7/32	5.56	7/32	5.56	1 5/8	41.27
1/4	6.35	1	25.40	1 1/2	38.10	1 3/4	1 3/4	7/32	5.56	7/32	5.56	1 5/8	41.27
9/32	7.14	1	25.40	1 1/2	38.10	1 3/4	1 3/4	7/32	5.56	7/32	5.56	1 5/8	41.27
5/16	7.94	1	25.40	1 1/2	38.10	1 3/4	1 3/4	7/32	5.56	7/32	5.56	1 5/8	41.27
11/32	8.73	1	25.40	1 1/2	38.10	1 3/4	1 3/4	7/32	5.56	7/32	5.56	1 5/8	41.27
3/8	9.52	1	25.40	1 1/2	38.10	1 3/4	1 3/4	7/32	5.56	7/32	5.56	1 5/8	41.27
13/32	10.32	1	25.40	1 1/2	38.10	1 3/4	1 3/4	7/32	5.56	7/32	5.56	1 5/8	41.27
7/16	11.11	1	25.40	1 1/2	38.10	1 3/4	1 3/4	7/32	5.56	7/32	5.56	1 5/8	41.27
15/32	11.91	1	25.40	1 1/2	38.10	1 3/4	1 3/4	7/32	5.56	7/32	5.56	1 5/8	41.27
1/2	12.70	1	25.40	1 1/2	38.10	1 3/4	1 3/4	7/32	5.56	7/32	5.56	1 5/8	41.27
17/32	13.49	1	25.40	1 1/2	38.10	1 3/4	1 3/4	7/32	5.56	7/32	5.56	1 5/8	41.27
9/16	14.29	1	25.40	1 1/2	38.10	1 3/4	1 3/4	7/32	5.56	7/32	5.56	1 5/8	41.27
19/32	15.08	1	25.40	1 1/2	38.10	1 3/4	1 3/4	7/32	5.56	7/32	5.56	1 5/8	41.27
5/8	15.87	1	25.40	1 1/2	38.10	1 3/4	1 3/4	7/32	5.56	7/32	5.56	1 5/8	41.27
21/32	16.67	1	25.40	1 1/2	38.10	1 3/4	1 3/4	7/32	5.56	7/32	5.56	1 5/8	41.27
11/16	17.46	1	25.40	1 1/2	38.10	1 3/4	1 3/4	7/32	5.56	7/32	5.56	1 5/8	41.27
23/32	18.26	1	25.40	1 1/2	38.10	1 3/4	1 3/4	7/32	5.56	7/32	5.56	1 5/8	41.27
3/4	19.05	1	25.40	1 1/2	38.10	1 3/4	1 3/4	7/32	5.56	7/32	5.56	1 5/8	41.27
25/32	19.84	1	25.40	1 1/2	38.10	1 3/4	1 3/4	7/32	5.56	7/32	5.56	1 5/8	41.27
13/16	20.64	1	25.40	1 1/2	38.10	1 3/4	1 3/4	7/32	5.56	7/32	5.56	1 5/8	41.27
27/32	21.43	1	25.40	1 1/2	38.10	1 3/4	1 3/4	7/32	5.56	7/32	5.56	1 5/8	41.27
7/8	22.22	1	25.40	1 1/2	38.10	1 3/4	1 3/4	7/32	5.56	7/32	5.56	1 5/8	41.27
29/32	23.02	1	25.40	1 1/2	38.10	1 3/4	1 3/4	7/32	5.56	7/32	5.56	1 5/8	41.27
15/16	23.81	1	25.40	1 1/2	38.10	1 3/4	1 3/4	7/32	5.56	7/32	5.56	1 5/8	41.27
31/32	24.61	1	25.40	1 1/2	38.10	1 3/4	1 3/4	7/32	5.56	7/32	5.56	1 5/8	41.27
1	25.40	1	25.40	1 1/2	38.10	1 3/4	1 3/4	7/32	5.56	7/32	5.56	1 5/8	41.27
3/16	4.76	7/8	22.22	1 1/8	28.57	1 3/4	1 3/4	7/32	5.56	7/32	5.56	1 5/8	41.27
7/32	5.56	7/8	22.22	1 1/8	28.57	1 3/4	1 3/4	7/32	5.56	7/32	5.56	1 5/8	41.27
1/4	6.35	7/8	22.22	1 1/8	28.57	1 3/4	1 3/4	7/32	5.56	7/32	5.56	1 5/8	41.27
9/32	7.14	7/8	22.22	1 1/8	28.57	1 3/4	1 3/4	7/32	5.56	7/32	5.56	1 5/8	41.27
5/16	7.94	7/8	22.22	1 1/8	28.57	1 3/4	1 3/4	7/32	5.56	7/32	5.56	1 5/8	41.27

www.globaltungsten.com

B		E		D		M	A	L		T		C	
inch	mm	inch	mm	inch	mm	inch	inch	inch	mm	inch	mm	inch	mm
11/32	8.73	7/8	22.22	1 1/8	28.57	1 3/4	1 3/4	7/32	5.56	7/32	5.56	1 5/8	41.27
3/8	9.52	7/8	22.22	1 1/8	28.57	1 3/4	1 3/4	7/32	5.56	7/32	5.56	1 5/8	41.27
13/32	10.32	7/8	22.22	1 1/8	28.57	1 3/4	1 3/4	7/32	5.56	7/32	5.56	1 5/8	41.27
7/16	11.11	7/8	22.22	1 1/8	28.57	1 3/4	1 3/4	7/32	5.56	7/32	5.56	1 5/8	41.27
15/32	11.91	7/8	22.22	1 1/8	28.57	1 3/4	1 3/4	7/32	5.56	7/32	5.56	1 5/8	41.27
1/2	12.70	7/8	22.22	1 1/8	28.57	1 3/4	1 3/4	7/32	5.56	7/32	5.56	1 5/8	41.27
17/32	13.49	7/8	22.22	1 1/8	28.57	1 3/4	1 3/4	7/32	5.56	7/32	5.56	1 5/8	41.27
9/16	14.29	7/8	22.22	1 1/8	28.57	1 3/4	1 3/4	7/32	5.56	7/32	5.56	1 5/8	41.27
19/32	15.08	7/8	22.22	1 1/8	28.57	1 3/4	1 3/4	7/32	5.56	7/32	5.56	1 5/8	41.27
5/8	15.87	7/8	22.22	1 1/8	28.57	1 3/4	1 3/4	7/32	5.56	7/32	5.56	1 5/8	41.27
21/32	16.67	7/8	22.22	1 1/8	28.57	1 3/4	1 3/4	7/32	5.56	7/32	5.56	1 5/8	41.27
11/16	17.46	7/8	22.22	1 1/8	28.57	1 3/4	1 3/4	7/32	5.56	7/32	5.56	1 5/8	41.27
23/32	18.26	7/8	22.22	1 1/8	28.57	1 3/4	1 3/4	7/32	5.56	7/32	5.56	1 5/8	41.27
3/4	19.05	7/8	22.22	1 1/8	28.57	1 3/4	1 3/4	7/32	5.56	7/32	5.56	1 5/8	41.27
25/32	19.84	7/8	22.22	1 1/8	28.57	1 3/4	1 3/4	7/32	5.56	7/32	5.56	1 5/8	41.27
13/16	20.64	7/8	22.22	1 1/8	28.57	1 3/4	1 3/4	7/32	5.56	7/32	5.56	1 5/8	41.27
27/32	21.43	7/8	22.22	1 1/8	28.57	1 3/4	1 3/4	7/32	5.56	7/32	5.56	1 5/8	41.27
7/8	22.22	7/8	22.22	1 1/8	28.57	1 3/4	1 3/4	7/32	5.56	7/32	5.56	1 5/8	41.27
3/16	4.76	7/8	22.22	1 1/4	31.75	1 3/4	1 3/4	7/32	5.56	7/32	5.56	1 5/8	41.27
7/32	5.56	7/8	22.22	1 1/4	31.75	1 3/4	1 3/4	7/32	5.56	7/32	5.56	1 5/8	41.27
1/4	6.35	7/8	22.22	1 1/4	31.75	1 3/4	1 3/4	7/32	5.56	7/32	5.56	1 5/8	41.27
9/32	7.14	7/8	22.22	1 1/4	31.75	1 3/4	1 3/4	7/32	5.56	7/32	5.56	1 5/8	41.27
5/16	7.94	7/8	22.22	1 1/4	31.75	1 3/4	1 3/4	7/32	5.56	7/32	5.56	1 5/8	41.27
11/32	8.73	7/8	22.22	1 1/4	31.75	1 3/4	1 3/4	7/32	5.56	7/32	5.56	1 5/8	41.27
3/8	9.52	7/8	22.22	1 1/4	31.75	1 3/4	1 3/4	7/32	5.56	7/32	5.56	1 5/8	41.27
13/32	10.32	7/8	22.22	1 1/4	31.75	1 3/4	1 3/4	7/32	5.56	7/32	5.56	1 5/8	41.27
7/16	11.11	7/8	22.22	1 1/4	31.75	1 3/4	1 3/4	7/32	5.56	7/32	5.56	1 5/8	41.27
15/32	11.91	7/8	22.22	1 1/4	31.75	1 3/4	1 3/4	7/32	5.56	7/32	5.56	1 5/8	41.27
1/2	12.70	7/8	22.22	1 1/4	31.75	1 3/4	1 3/4	7/32	5.56	7/32	5.56	1 5/8	41.27
17/32	13.49	7/8	22.22	1 1/4	31.75	1 3/4	1 3/4	7/32	5.56	7/32	5.56	1 5/8	41.27
9/16	14.29	7/8	22.22	1 1/4	31.75	1 3/4	1 3/4	7/32	5.56	7/32	5.56	1 5/8	41.27
19/32	15.08	7/8	22.22	1 1/4	31.75	1 3/4	1 3/4	7/32	5.56	7/32	5.56	1 5/8	41.27
5/8	15.87	7/8	22.22	1 1/4	31.75	1 3/4	1 3/4	7/32	5.56	7/32	5.56	1 5/8	41.27
21/32	16.67	7/8	22.22	1 1/4	31.75	1 3/4	1 3/4	7/32	5.56	7/32	5.56	1 5/8	41.27
11/16	17.46	7/8	22.22	1 1/4	31.75	1 3/4	1 3/4	7/32	5.56	7/32	5.56	1 5/8	41.27
23/32	18.26	7/8	22.22	1 1/4	31.75	1 3/4	1 3/4	7/32	5.56	7/32	5.56	1 5/8	41.27
3/4	19.05	7/8	22.22	1 1/4	31.75	1 3/4	1 3/4	7/32	5.56	7/32	5.56	1 5/8	41.27
25/32	19.84	7/8	22.22	1 1/4	31.75	1 3/4	1 3/4	7/32	5.56	7/32	5.56	1 5/8	41.27
13/16	20.64	7/8	22.22	1 1/4	31.75	1 3/4	1 3/4	7/32	5.56	7/32	5.56	1 5/8	41.27
27/32	21.43	7/8	22.22	1 1/4	31.75	1 3/4	1 3/4	7/32	5.56	7/32	5.56	1 5/8	41.27
7/8	22.22	7/8	22.22	1 1/4	31.75	1 3/4	1 3/4	7/32	5.56	7/32	5.56	1 5/8	41.27
3/16	4.76	7/8	22.22	1 3/8	34.92	1 3/4	1 3/4	7/32	5.56	7/32	5.56	1 5/8	41.27
7/32	5.56	7/8	22.22	1 3/8	34.92	1 3/4	1 3/4	7/32	5.56	7/32	5.56	1 5/8	41.27
1/4	6.35	7/8	22.22	1 3/8	34.92	1 3/4	1 3/4	7/32	5.56	7/32	5.56	1 5/8	41.27
9/32	7.14	7/8	22.22	1 3/8	34.92	1 3/4	1 3/4	7/32	5.56	7/32	5.56	1 5/8	41.27

www.globaltungsters.com

B		E		D		M	A	L		T		C	
inch	mm	inch	mm	inch	mm	inch	inch	inch	mm	inch	mm	inch	mm
5/16	7.94	7/8	22.22	1 3/8	34.92	1 3/4	1 3/4	7/32	5.56	7/32	5.56	1 5/8	41.27
11/32	8.73	7/8	22.22	1 3/8	34.92	1 3/4	1 3/4	7/32	5.56	7/32	5.56	1 5/8	41.27
3/8	9.52	7/8	22.22	1 3/8	34.92	1 3/4	1 3/4	7/32	5.56	7/32	5.56	1 5/8	41.27
13/32	10.32	7/8	22.22	1 3/8	34.92	1 3/4	1 3/4	7/32	5.56	7/32	5.56	1 5/8	41.27
7/16	11.11	7/8	22.22	1 3/8	34.92	1 3/4	1 3/4	7/32	5.56	7/32	5.56	1 5/8	41.27
15/32	11.91	7/8	22.22	1 3/8	34.92	1 3/4	1 3/4	7/32	5.56	7/32	5.56	1 5/8	41.27
1/2	12.70	7/8	22.22	1 3/8	34.92	1 3/4	1 3/4	7/32	5.56	7/32	5.56	1 5/8	41.27
17/32	13.49	7/8	22.22	1 3/8	34.92	1 3/4	1 3/4	7/32	5.56	7/32	5.56	1 5/8	41.27
9/16	14.29	7/8	22.22	1 3/8	34.92	1 3/4	1 3/4	7/32	5.56	7/32	5.56	1 5/8	41.27
19/32	15.08	7/8	22.22	1 3/8	34.92	1 3/4	1 3/4	7/32	5.56	7/32	5.56	1 5/8	41.27
5/8	15.87	7/8	22.22	1 3/8	34.92	1 3/4	1 3/4	7/32	5.56	7/32	5.56	1 5/8	41.27
21/32	16.67	7/8	22.22	1 3/8	34.92	1 3/4	1 3/4	7/32	5.56	7/32	5.56	1 5/8	41.27
11/16	17.46	7/8	22.22	1 3/8	34.92	1 3/4	1 3/4	7/32	5.56	7/32	5.56	1 5/8	41.27
23/32	18.26	7/8	22.22	1 3/8	34.92	1 3/4	1 3/4	7/32	5.56	7/32	5.56	1 5/8	41.27
3/4	19.05	7/8	22.22	1 3/8	34.92	1 3/4	1 3/4	7/32	5.56	7/32	5.56	1 5/8	41.27
25/32	19.84	7/8	22.22	1 3/8	34.92	1 3/4	1 3/4	7/32	5.56	7/32	5.56	1 5/8	41.27
13/16	20.64	7/8	22.22	1 3/8	34.92	1 3/4	1 3/4	7/32	5.56	7/32	5.56	1 5/8	41.27
27/32	21.43	7/8	22.22	1 3/8	34.92	1 3/4	1 3/4	7/32	5.56	7/32	5.56	1 5/8	41.27
7/8	22.22	7/8	22.22	1 3/8	34.92	1 3/4	1 3/4	7/32	5.56	7/32	5.56	1 5/8	41.27
3/16	4.76	7/8	22.22	1 1/2	38.10	1 3/4	1 3/4	7/32	5.56	7/32	5.56	1 5/8	41.27
7/32	5.56	7/8	22.22	1 1/2	38.10	1 3/4	1 3/4	7/32	5.56	7/32	5.56	1 5/8	41.27
1/4	6.35	7/8	22.22	1 1/2	38.10	1 3/4	1 3/4	7/32	5.56	7/32	5.56	1 5/8	41.27
9/32	7.14	7/8	22.22	1 1/2	38.10	1 3/4	1 3/4	7/32	5.56	7/32	5.56	1 5/8	41.27
5/16	7.94	7/8	22.22	1 1/2	38.10	1 3/4	1 3/4	7/32	5.56	7/32	5.56	1 5/8	41.27
11/32	8.73	7/8	22.22	1 1/2	38.10	1 3/4	1 3/4	7/32	5.56	7/32	5.56	1 5/8	41.27
3/8	9.52	7/8	22.22	1 1/2	38.10	1 3/4	1 3/4	7/32	5.56	7/32	5.56	1 5/8	41.27
13/32	10.32	7/8	22.22	1 1/2	38.10	1 3/4	1 3/4	7/32	5.56	7/32	5.56	1 5/8	41.27
7/16	11.11	7/8	22.22	1 1/2	38.10	1 3/4	1 3/4	7/32	5.56	7/32	5.56	1 5/8	41.27
15/32	11.91	7/8	22.22	1 1/2	38.10	1 3/4	1 3/4	7/32	5.56	7/32	5.56	1 5/8	41.27
1/2	12.70	7/8	22.22	1 1/2	38.10	1 3/4	1 3/4	7/32	5.56	7/32	5.56	1 5/8	41.27
17/32	13.49	7/8	22.22	1 1/2	38.10	1 3/4	1 3/4	7/32	5.56	7/32	5.56	1 5/8	41.27
9/16	14.29	7/8	22.22	1 1/2	38.10	1 3/4	1 3/4	7/32	5.56	7/32	5.56	1 5/8	41.27
19/32	15.08	7/8	22.22	1 1/2	38.10	1 3/4	1 3/4	7/32	5.56	7/32	5.56	1 5/8	41.27
5/8	15.87	7/8	22.22	1 1/2	38.10	1 3/4	1 3/4	7/32	5.56	7/32	5.56	1 5/8	41.27
21/32	16.67	7/8	22.22	1 1/2	38.10	1 3/4	1 3/4	7/32	5.56	7/32	5.56	1 5/8	41.27
11/16	17.46	7/8	22.22	1 1/2	38.10	1 3/4	1 3/4	7/32	5.56	7/32	5.56	1 5/8	41.27
23/32	18.26	7/8	22.22	1 1/2	38.10	1 3/4	1 3/4	7/32	5.56	7/32	5.56	1 5/8	41.27
3/4	19.05	7/8	22.22	1 1/2	38.10	1 3/4	1 3/4	7/32	5.56	7/32	5.56	1 5/8	41.27
25/32	19.84	7/8	22.22	1 1/2	38.10	1 3/4	1 3/4	7/32	5.56	7/32	5.56	1 5/8	41.27
13/16	20.64	7/8	22.22	1 1/2	38.10	1 3/4	1 3/4	7/32	5.56	7/32	5.56	1 5/8	41.27
27/32	21.43	7/8	22.22	1 1/2	38.10	1 3/4	1 3/4	7/32	5.56	7/32	5.56	1 5/8	41.27
7/8	22.22	7/8	22.22	1 1/2	38.10	1 3/4	1 3/4	7/32	5.56	7/32	5.56	1 5/8	41.27
3/16	4.76	3/4	19.05	29/32	23.02	1 3/4	1 3/4	7/32	5.56	7/32	5.56	1 5/8	41.27
7/32	5.56	3/4	19.05	29/32	23.02	1 3/4	1 3/4	7/32	5.56	7/32	5.56	1 5/8	41.27
1/4	6.35	3/4	19.05	29/32	23.02	1 3/4	1 3/4	7/32	5.56	7/32	5.56	1 5/8	41.27

www.globaltungsteels.com

B		E		D		M	A	L		T		C	
inch	mm	inch	mm	inch	mm	inch	inch	inch	mm	inch	mm	inch	mm
9/32	7.14	3/4	19.05	29/32	23.02	1 3/4	1 3/4	7/32	5.56	7/32	5.56	1 5/8	41.27
5/16	7.94	3/4	19.05	29/32	23.02	1 3/4	1 3/4	7/32	5.56	7/32	5.56	1 5/8	41.27
11/32	8.73	3/4	19.05	29/32	23.02	1 3/4	1 3/4	7/32	5.56	7/32	5.56	1 5/8	41.27
3/8	9.52	3/4	19.05	29/32	23.02	1 3/4	1 3/4	7/32	5.56	7/32	5.56	1 5/8	41.27
13/32	10.32	3/4	19.05	29/32	23.02	1 3/4	1 3/4	7/32	5.56	7/32	5.56	1 5/8	41.27
7/16	11.11	3/4	19.05	29/32	23.02	1 3/4	1 3/4	7/32	5.56	7/32	5.56	1 5/8	41.27
15/32	11.91	3/4	19.05	29/32	23.02	1 3/4	1 3/4	7/32	5.56	7/32	5.56	1 5/8	41.27
1/2	12.70	3/4	19.05	29/32	23.02	1 3/4	1 3/4	7/32	5.56	7/32	5.56	1 5/8	41.27
17/32	13.49	3/4	19.05	29/32	23.02	1 3/4	1 3/4	7/32	5.56	7/32	5.56	1 5/8	41.27
9/16	14.29	3/4	19.05	29/32	23.02	1 3/4	1 3/4	7/32	5.56	7/32	5.56	1 5/8	41.27
19/32	15.08	3/4	19.05	29/32	23.02	1 3/4	1 3/4	7/32	5.56	7/32	5.56	1 5/8	41.27
5/8	15.87	3/4	19.05	29/32	23.02	1 3/4	1 3/4	7/32	5.56	7/32	5.56	1 5/8	41.27
21/32	16.67	3/4	19.05	29/32	23.02	1 3/4	1 3/4	7/32	5.56	7/32	5.56	1 5/8	41.27
11/16	17.46	3/4	19.05	29/32	23.02	1 3/4	1 3/4	7/32	5.56	7/32	5.56	1 5/8	41.27
23/32	18.26	3/4	19.05	29/32	23.02	1 3/4	1 3/4	7/32	5.56	7/32	5.56	1 5/8	41.27
3/4	19.05	3/4	19.05	29/32	23.02	1 3/4	1 3/4	7/32	5.56	7/32	5.56	1 5/8	41.27
3/16	4.76	3/4	19.05	15/16	23.81	1 3/4	1 3/4	7/32	5.56	7/32	5.56	1 5/8	41.27
7/32	5.56	3/4	19.05	15/16	23.81	1 3/4	1 3/4	7/32	5.56	7/32	5.56	1 5/8	41.27
1/4	6.35	3/4	19.05	15/16	23.81	1 3/4	1 3/4	7/32	5.56	7/32	5.56	1 5/8	41.27
9/32	7.14	3/4	19.05	15/16	23.81	1 3/4	1 3/4	7/32	5.56	7/32	5.56	1 5/8	41.27
5/16	7.94	3/4	19.05	15/16	23.81	1 3/4	1 3/4	7/32	5.56	7/32	5.56	1 5/8	41.27
11/32	8.73	3/4	19.05	15/16	23.81	1 3/4	1 3/4	7/32	5.56	7/32	5.56	1 5/8	41.27
3/8	9.52	3/4	19.05	15/16	23.81	1 3/4	1 3/4	7/32	5.56	7/32	5.56	1 5/8	41.27
13/32	10.32	3/4	19.05	15/16	23.81	1 3/4	1 3/4	7/32	5.56	7/32	5.56	1 5/8	41.27
7/16	11.11	3/4	19.05	15/16	23.81	1 3/4	1 3/4	7/32	5.56	7/32	5.56	1 5/8	41.27
15/32	11.91	3/4	19.05	15/16	23.81	1 3/4	1 3/4	7/32	5.56	7/32	5.56	1 5/8	41.27
1/2	12.70	3/4	19.05	15/16	23.81	1 3/4	1 3/4	7/32	5.56	7/32	5.56	1 5/8	41.27
17/32	13.49	3/4	19.05	15/16	23.81	1 3/4	1 3/4	7/32	5.56	7/32	5.56	1 5/8	41.27
9/16	14.29	3/4	19.05	15/16	23.81	1 3/4	1 3/4	7/32	5.56	7/32	5.56	1 5/8	41.27
19/32	15.08	3/4	19.05	15/16	23.81	1 3/4	1 3/4	7/32	5.56	7/32	5.56	1 5/8	41.27
5/8	15.87	3/4	19.05	15/16	23.81	1 3/4	1 3/4	7/32	5.56	7/32	5.56	1 5/8	41.27
21/32	16.67	3/4	19.05	15/16	23.81	1 3/4	1 3/4	7/32	5.56	7/32	5.56	1 5/8	41.27
11/16	17.46	3/4	19.05	15/16	23.81	1 3/4	1 3/4	7/32	5.56	7/32	5.56	1 5/8	41.27
23/32	18.26	3/4	19.05	15/16	23.81	1 3/4	1 3/4	7/32	5.56	7/32	5.56	1 5/8	41.27
3/4	19.05	3/4	19.05	15/16	23.81	1 3/4	1 3/4	7/32	5.56	7/32	5.56	1 5/8	41.27
3/16	4.76	3/4	19.05	31/32	24.61	1 3/4	1 3/4	7/32	5.56	7/32	5.56	1 5/8	41.27
7/32	5.56	3/4	19.05	31/32	24.61	1 3/4	1 3/4	7/32	5.56	7/32	5.56	1 5/8	41.27
1/4	6.35	3/4	19.05	31/32	24.61	1 3/4	1 3/4	7/32	5.56	7/32	5.56	1 5/8	41.27
9/32	7.14	3/4	19.05	31/32	24.61	1 3/4	1 3/4	7/32	5.56	7/32	5.56	1 5/8	41.27
5/16	7.94	3/4	19.05	31/32	24.61	1 3/4	1 3/4	7/32	5.56	7/32	5.56	1 5/8	41.27
11/32	8.73	3/4	19.05	31/32	24.61	1 3/4	1 3/4	7/32	5.56	7/32	5.56	1 5/8	41.27
3/8	9.52	3/4	19.05	31/32	24.61	1 3/4	1 3/4	7/32	5.56	7/32	5.56	1 5/8	41.27
13/32	10.32	3/4	19.05	31/32	24.61	1 3/4	1 3/4	7/32	5.56	7/32	5.56	1 5/8	41.27
7/16	11.11	3/4	19.05	31/32	24.61	1 3/4	1 3/4	7/32	5.56	7/32	5.56	1 5/8	41.27
15/32	11.91	3/4	19.05	31/32	24.61	1 3/4	1 3/4	7/32	5.56	7/32	5.56	1 5/8	41.27

www.globaltungsten.com

B		E		D		M	A	L		T		C	
inch	mm	inch	mm	inch	mm	inch	inch	inch	mm	inch	mm	inch	mm
1/2	12.70	3/4	19.05	31/32	24.61	1 3/4	1 3/4	7/32	5.56	7/32	5.56	1 5/8	41.27
17/32	13.49	3/4	19.05	31/32	24.61	1 3/4	1 3/4	7/32	5.56	7/32	5.56	1 5/8	41.27
9/16	14.29	3/4	19.05	31/32	24.61	1 3/4	1 3/4	7/32	5.56	7/32	5.56	1 5/8	41.27
19/32	15.08	3/4	19.05	31/32	24.61	1 3/4	1 3/4	7/32	5.56	7/32	5.56	1 5/8	41.27
5/8	15.87	3/4	19.05	31/32	24.61	1 3/4	1 3/4	7/32	5.56	7/32	5.56	1 5/8	41.27
21/32	16.67	3/4	19.05	31/32	24.61	1 3/4	1 3/4	7/32	5.56	7/32	5.56	1 5/8	41.27
11/16	17.46	3/4	19.05	31/32	24.61	1 3/4	1 3/4	7/32	5.56	7/32	5.56	1 5/8	41.27
23/32	18.26	3/4	19.05	31/32	24.61	1 3/4	1 3/4	7/32	5.56	7/32	5.56	1 5/8	41.27
3/4	19.05	3/4	19.05	31/32	24.61	1 3/4	1 3/4	7/32	5.56	7/32	5.56	1 5/8	41.27
3/16	4.76	3/4	19.05	1	25.40	1 3/4	1 3/4	7/32	5.56	7/32	5.56	1 5/8	41.27
7/32	5.56	3/4	19.05	1	25.40	1 3/4	1 3/4	7/32	5.56	7/32	5.56	1 5/8	41.27
1/4	6.35	3/4	19.05	1	25.40	1 3/4	1 3/4	7/32	5.56	7/32	5.56	1 5/8	41.27
9/32	7.14	3/4	19.05	1	25.40	1 3/4	1 3/4	7/32	5.56	7/32	5.56	1 5/8	41.27
5/16	7.94	3/4	19.05	1	25.40	1 3/4	1 3/4	7/32	5.56	7/32	5.56	1 5/8	41.27
11/32	8.73	3/4	19.05	1	25.40	1 3/4	1 3/4	7/32	5.56	7/32	5.56	1 5/8	41.27
3/8	9.52	3/4	19.05	1	25.40	1 3/4	1 3/4	7/32	5.56	7/32	5.56	1 5/8	41.27
13/32	10.32	3/4	19.05	1	25.40	1 3/4	1 3/4	7/32	5.56	7/32	5.56	1 5/8	41.27
7/16	11.11	3/4	19.05	1	25.40	1 3/4	1 3/4	7/32	5.56	7/32	5.56	1 5/8	41.27
15/32	11.91	3/4	19.05	1	25.40	1 3/4	1 3/4	7/32	5.56	7/32	5.56	1 5/8	41.27
1/2	12.70	3/4	19.05	1	25.40	1 3/4	1 3/4	7/32	5.56	7/32	5.56	1 5/8	41.27
17/32	13.49	3/4	19.05	1	25.40	1 3/4	1 3/4	7/32	5.56	7/32	5.56	1 5/8	41.27
9/16	14.29	3/4	19.05	1	25.40	1 3/4	1 3/4	7/32	5.56	7/32	5.56	1 5/8	41.27
19/32	15.08	3/4	19.05	1	25.40	1 3/4	1 3/4	7/32	5.56	7/32	5.56	1 5/8	41.27
5/8	15.87	3/4	19.05	1	25.40	1 3/4	1 3/4	7/32	5.56	7/32	5.56	1 5/8	41.27
21/32	16.67	3/4	19.05	1	25.40	1 3/4	1 3/4	7/32	5.56	7/32	5.56	1 5/8	41.27
11/16	17.46	3/4	19.05	1	25.40	1 3/4	1 3/4	7/32	5.56	7/32	5.56	1 5/8	41.27
23/32	18.26	3/4	19.05	1	25.40	1 3/4	1 3/4	7/32	5.56	7/32	5.56	1 5/8	41.27
3/4	19.05	3/4	19.05	1	25.40	1 3/4	1 3/4	7/32	5.56	7/32	5.56	1 5/8	41.27
3/16	4.76	3/4	19.05	1 1/8	28.57	1 3/4	1 3/4	7/32	5.56	7/32	5.56	1 5/8	41.27
7/32	5.56	3/4	19.05	1 1/8	28.57	1 3/4	1 3/4	7/32	5.56	7/32	5.56	1 5/8	41.27
1/4	6.35	3/4	19.05	1 1/8	28.57	1 3/4	1 3/4	7/32	5.56	7/32	5.56	1 5/8	41.27
9/32	7.14	3/4	19.05	1 1/8	28.57	1 3/4	1 3/4	7/32	5.56	7/32	5.56	1 5/8	41.27
5/16	7.94	3/4	19.05	1 1/8	28.57	1 3/4	1 3/4	7/32	5.56	7/32	5.56	1 5/8	41.27
11/32	8.73	3/4	19.05	1 1/8	28.57	1 3/4	1 3/4	7/32	5.56	7/32	5.56	1 5/8	41.27
3/8	9.52	3/4	19.05	1 1/8	28.57	1 3/4	1 3/4	7/32	5.56	7/32	5.56	1 5/8	41.27
13/32	10.32	3/4	19.05	1 1/8	28.57	1 3/4	1 3/4	7/32	5.56	7/32	5.56	1 5/8	41.27
7/16	11.11	3/4	19.05	1 1/8	28.57	1 3/4	1 3/4	7/32	5.56	7/32	5.56	1 5/8	41.27
15/32	11.91	3/4	19.05	1 1/8	28.57	1 3/4	1 3/4	7/32	5.56	7/32	5.56	1 5/8	41.27
1/2	12.70	3/4	19.05	1 1/8	28.57	1 3/4	1 3/4	7/32	5.56	7/32	5.56	1 5/8	41.27
17/32	13.49	3/4	19.05	1 1/8	28.57	1 3/4	1 3/4	7/32	5.56	7/32	5.56	1 5/8	41.27
9/16	14.29	3/4	19.05	1 1/8	28.57	1 3/4	1 3/4	7/32	5.56	7/32	5.56	1 5/8	41.27
19/32	15.08	3/4	19.05	1 1/8	28.57	1 3/4	1 3/4	7/32	5.56	7/32	5.56	1 5/8	41.27
5/8	15.87	3/4	19.05	1 1/8	28.57	1 3/4	1 3/4	7/32	5.56	7/32	5.56	1 5/8	41.27
21/32	16.67	3/4	19.05	1 1/8	28.57	1 3/4	1 3/4	7/32	5.56	7/32	5.56	1 5/8	41.27
11/16	17.46	3/4	19.05	1 1/8	28.57	1 3/4	1 3/4	7/32	5.56	7/32	5.56	1 5/8	41.27

www.globaltungsten.com

B		E		D		M	A	L		T		C	
inch	mm	inch	mm	inch	mm	inch	inch	inch	mm	inch	mm	inch	mm
23/32	18.26	3/4	19.05	1 1/8	28.57	1 3/4	1 3/4	7/32	5.56	7/32	5.56	1 5/8	41.27
3/4	19.05	3/4	19.05	1 1/8	28.57	1 3/4	1 3/4	7/32	5.56	7/32	5.56	1 5/8	41.27
3/16	4.76	3/4	19.05	1 1/4	31.75	1 3/4	1 3/4	7/32	5.56	7/32	5.56	1 5/8	41.27
7/32	5.56	3/4	19.05	1 1/4	31.75	1 3/4	1 3/4	7/32	5.56	7/32	5.56	1 5/8	41.27
1/4	6.35	3/4	19.05	1 1/4	31.75	1 3/4	1 3/4	7/32	5.56	7/32	5.56	1 5/8	41.27
9/32	7.14	3/4	19.05	1 1/4	31.75	1 3/4	1 3/4	7/32	5.56	7/32	5.56	1 5/8	41.27
5/16	7.94	3/4	19.05	1 1/4	31.75	1 3/4	1 3/4	7/32	5.56	7/32	5.56	1 5/8	41.27
11/32	8.73	3/4	19.05	1 1/4	31.75	1 3/4	1 3/4	7/32	5.56	7/32	5.56	1 5/8	41.27
3/8	9.52	3/4	19.05	1 1/4	31.75	1 3/4	1 3/4	7/32	5.56	7/32	5.56	1 5/8	41.27
13/32	10.32	3/4	19.05	1 1/4	31.75	1 3/4	1 3/4	7/32	5.56	7/32	5.56	1 5/8	41.27
7/16	11.11	3/4	19.05	1 1/4	31.75	1 3/4	1 3/4	7/32	5.56	7/32	5.56	1 5/8	41.27
15/32	11.91	3/4	19.05	1 1/4	31.75	1 3/4	1 3/4	7/32	5.56	7/32	5.56	1 5/8	41.27
1/2	12.70	3/4	19.05	1 1/4	31.75	1 3/4	1 3/4	7/32	5.56	7/32	5.56	1 5/8	41.27
17/32	13.49	3/4	19.05	1 1/4	31.75	1 3/4	1 3/4	7/32	5.56	7/32	5.56	1 5/8	41.27
9/16	14.29	3/4	19.05	1 1/4	31.75	1 3/4	1 3/4	7/32	5.56	7/32	5.56	1 5/8	41.27
19/32	15.08	3/4	19.05	1 1/4	31.75	1 3/4	1 3/4	7/32	5.56	7/32	5.56	1 5/8	41.27
5/8	15.87	3/4	19.05	1 1/4	31.75	1 3/4	1 3/4	7/32	5.56	7/32	5.56	1 5/8	41.27
21/32	16.67	3/4	19.05	1 1/4	31.75	1 3/4	1 3/4	7/32	5.56	7/32	5.56	1 5/8	41.27
11/16	17.46	3/4	19.05	1 1/4	31.75	1 3/4	1 3/4	7/32	5.56	7/32	5.56	1 5/8	41.27
23/32	18.26	3/4	19.05	1 1/4	31.75	1 3/4	1 3/4	7/32	5.56	7/32	5.56	1 5/8	41.27
3/4	19.05	3/4	19.05	1 1/4	31.75	1 3/4	1 3/4	7/32	5.56	7/32	5.56	1 5/8	41.27
3/16	4.76	3/4	19.05	1 3/8	34.92	1 3/4	1 3/4	7/32	5.56	7/32	5.56	1 5/8	41.27
7/32	5.56	3/4	19.05	1 3/8	34.92	1 3/4	1 3/4	7/32	5.56	7/32	5.56	1 5/8	41.27
1/4	6.35	3/4	19.05	1 3/8	34.92	1 3/4	1 3/4	7/32	5.56	7/32	5.56	1 5/8	41.27
9/32	7.14	3/4	19.05	1 3/8	34.92	1 3/4	1 3/4	7/32	5.56	7/32	5.56	1 5/8	41.27
5/16	7.94	3/4	19.05	1 3/8	34.92	1 3/4	1 3/4	7/32	5.56	7/32	5.56	1 5/8	41.27
11/32	8.73	3/4	19.05	1 3/8	34.92	1 3/4	1 3/4	7/32	5.56	7/32	5.56	1 5/8	41.27
3/8	9.52	3/4	19.05	1 3/8	34.92	1 3/4	1 3/4	7/32	5.56	7/32	5.56	1 5/8	41.27
13/32	10.32	3/4	19.05	1 3/8	34.92	1 3/4	1 3/4	7/32	5.56	7/32	5.56	1 5/8	41.27
7/16	11.11	3/4	19.05	1 3/8	34.92	1 3/4	1 3/4	7/32	5.56	7/32	5.56	1 5/8	41.27
15/32	11.91	3/4	19.05	1 3/8	34.92	1 3/4	1 3/4	7/32	5.56	7/32	5.56	1 5/8	41.27
1/2	12.70	3/4	19.05	1 3/8	34.92	1 3/4	1 3/4	7/32	5.56	7/32	5.56	1 5/8	41.27
17/32	13.49	3/4	19.05	1 3/8	34.92	1 3/4	1 3/4	7/32	5.56	7/32	5.56	1 5/8	41.27
9/16	14.29	3/4	19.05	1 3/8	34.92	1 3/4	1 3/4	7/32	5.56	7/32	5.56	1 5/8	41.27
19/32	15.08	3/4	19.05	1 3/8	34.92	1 3/4	1 3/4	7/32	5.56	7/32	5.56	1 5/8	41.27
5/8	15.87	3/4	19.05	1 3/8	34.92	1 3/4	1 3/4	7/32	5.56	7/32	5.56	1 5/8	41.27
21/32	16.67	3/4	19.05	1 3/8	34.92	1 3/4	1 3/4	7/32	5.56	7/32	5.56	1 5/8	41.27
11/16	17.46	3/4	19.05	1 3/8	34.92	1 3/4	1 3/4	7/32	5.56	7/32	5.56	1 5/8	41.27
23/32	18.26	3/4	19.05	1 3/8	34.92	1 3/4	1 3/4	7/32	5.56	7/32	5.56	1 5/8	41.27
3/4	19.05	3/4	19.05	1 3/8	34.92	1 3/4	1 3/4	7/32	5.56	7/32	5.56	1 5/8	41.27
3/16	4.76	3/4	19.05	1 1/2	38.10	1 3/4	1 3/4	7/32	5.56	7/32	5.56	1 5/8	41.27
7/32	5.56	3/4	19.05	1 1/2	38.10	1 3/4	1 3/4	7/32	5.56	7/32	5.56	1 5/8	41.27
1/4	6.35	3/4	19.05	1 1/2	38.10	1 3/4	1 3/4	7/32	5.56	7/32	5.56	1 5/8	41.27
9/32	7.14	3/4	19.05	1 1/2	38.10	1 3/4	1 3/4	7/32	5.56	7/32	5.56	1 5/8	41.27
5/16	7.94	3/4	19.05	1 1/2	38.10	1 3/4	1 3/4	7/32	5.56	7/32	5.56	1 5/8	41.27

www.globaltungsten.com

B		E		D		M	A	L		T		C	
inch	mm	inch	mm	inch	mm	inch	inch	inch	mm	inch	mm	inch	mm
11/32	8.73	3/4	19.05	1 1/2	38.10	1 3/4	1 3/4	7/32	5.56	7/32	5.56	1 5/8	41.27
3/8	9.52	3/4	19.05	1 1/2	38.10	1 3/4	1 3/4	7/32	5.56	7/32	5.56	1 5/8	41.27
13/32	10.32	3/4	19.05	1 1/2	38.10	1 3/4	1 3/4	7/32	5.56	7/32	5.56	1 5/8	41.27
7/16	11.11	3/4	19.05	1 1/2	38.10	1 3/4	1 3/4	7/32	5.56	7/32	5.56	1 5/8	41.27
15/32	11.91	3/4	19.05	1 1/2	38.10	1 3/4	1 3/4	7/32	5.56	7/32	5.56	1 5/8	41.27
1/2	12.70	3/4	19.05	1 1/2	38.10	1 3/4	1 3/4	7/32	5.56	7/32	5.56	1 5/8	41.27
17/32	13.49	3/4	19.05	1 1/2	38.10	1 3/4	1 3/4	7/32	5.56	7/32	5.56	1 5/8	41.27
9/16	14.29	3/4	19.05	1 1/2	38.10	1 3/4	1 3/4	7/32	5.56	7/32	5.56	1 5/8	41.27
19/32	15.08	3/4	19.05	1 1/2	38.10	1 3/4	1 3/4	7/32	5.56	7/32	5.56	1 5/8	41.27
5/8	15.87	3/4	19.05	1 1/2	38.10	1 3/4	1 3/4	7/32	5.56	7/32	5.56	1 5/8	41.27
21/32	16.67	3/4	19.05	1 1/2	38.10	1 3/4	1 3/4	7/32	5.56	7/32	5.56	1 5/8	41.27
11/16	17.46	3/4	19.05	1 1/2	38.10	1 3/4	1 3/4	7/32	5.56	7/32	5.56	1 5/8	41.27
23/32	18.26	3/4	19.05	1 1/2	38.10	1 3/4	1 3/4	7/32	5.56	7/32	5.56	1 5/8	41.27
3/4	19.05	3/4	19.05	1 1/2	38.10	1 3/4	1 3/4	7/32	5.56	7/32	5.56	1 5/8	41.27
3/16	4.76	5/8	15.87	25/32	19.84	1 3/4	1 3/4	7/32	5.56	7/32	5.56	1 5/8	41.27
3/16	4.76	5/8	15.87	13/16	20.64	1 3/4	1 3/4	7/32	5.56	7/32	5.56	1 5/8	41.27
3/16	4.76	5/8	15.87	27/32	21.43	1 3/4	1 3/4	7/32	5.56	7/32	5.56	1 5/8	41.27
3/16	4.76	5/8	15.87	7/8	22.22	1 3/4	1 3/4	7/32	5.56	7/32	5.56	1 5/8	41.27
3/16	4.76	5/8	15.87	29/32	23.02	1 3/4	1 3/4	7/32	5.56	7/32	5.56	1 5/8	41.27
3/16	4.76	5/8	15.87	15/16	23.81	1 3/4	1 3/4	7/32	5.56	7/32	5.56	1 5/8	41.27
3/16	4.76	5/8	15.87	31/32	24.61	1 3/4	1 3/4	7/32	5.56	7/32	5.56	1 5/8	41.27
3/16	4.76	5/8	15.87	1	25.40	1 3/4	1 3/4	7/32	5.56	7/32	5.56	1 5/8	41.27
3/16	4.76	5/8	15.87	1 1/8	28.57	1 3/4	1 3/4	7/32	5.56	7/32	5.56	1 5/8	41.27
3/16	4.76	5/8	15.87	1 1/4	31.75	1 3/4	1 3/4	7/32	5.56	7/32	5.56	1 5/8	41.27
3/16	4.76	5/8	15.87	1 3/8	34.92	1 3/4	1 3/4	7/32	5.56	7/32	5.56	1 5/8	41.27
3/16	4.76	5/8	15.87	1 1/2	38.10	1 3/4	1 3/4	7/32	5.56	7/32	5.56	1 5/8	41.27
7/32	5.56	5/8	15.87	25/32	19.84	1 3/4	1 3/4	7/32	5.56	7/32	5.56	1 5/8	41.27
7/32	5.56	5/8	15.87	13/16	20.64	1 3/4	1 3/4	7/32	5.56	7/32	5.56	1 5/8	41.27
7/32	5.56	5/8	15.87	27/32	21.43	1 3/4	1 3/4	7/32	5.56	7/32	5.56	1 5/8	41.27
7/32	5.56	5/8	15.87	7/8	22.22	1 3/4	1 3/4	7/32	5.56	7/32	5.56	1 5/8	41.27
7/32	5.56	5/8	15.87	29/32	23.02	1 3/4	1 3/4	7/32	5.56	7/32	5.56	1 5/8	41.27
7/32	5.56	5/8	15.87	15/16	23.81	1 3/4	1 3/4	7/32	5.56	7/32	5.56	1 5/8	41.27
7/32	5.56	5/8	15.87	31/32	24.61	1 3/4	1 3/4	7/32	5.56	7/32	5.56	1 5/8	41.27
7/32	5.56	5/8	15.87	1	25.40	1 3/4	1 3/4	7/32	5.56	7/32	5.56	1 5/8	41.27
7/32	5.56	5/8	15.87	1 1/8	28.57	1 3/4	1 3/4	7/32	5.56	7/32	5.56	1 5/8	41.27
7/32	5.56	5/8	15.87	1 1/4	31.75	1 3/4	1 3/4	7/32	5.56	7/32	5.56	1 5/8	41.27
7/32	5.56	5/8	15.87	1 3/8	34.92	1 3/4	1 3/4	7/32	5.56	7/32	5.56	1 5/8	41.27
7/32	5.56	5/8	15.87	1 1/2	38.10	1 3/4	1 3/4	7/32	5.56	7/32	5.56	1 5/8	41.27
1/4	6.35	5/8	15.87	25/32	19.84	1 3/4	1 3/4	7/32	5.56	7/32	5.56	1 5/8	41.27
1/4	6.35	5/8	15.87	13/16	20.64	1 3/4	1 3/4	7/32	5.56	7/32	5.56	1 5/8	41.27
1/4	6.35	5/8	15.87	27/32	21.43	1 3/4	1 3/4	7/32	5.56	7/32	5.56	1 5/8	41.27
1/4	6.35	5/8	15.87	7/8	22.22	1 3/4	1 3/4	7/32	5.56	7/32	5.56	1 5/8	41.27
1/4	6.35	5/8	15.87	29/32	23.02	1 3/4	1 3/4	7/32	5.56	7/32	5.56	1 5/8	41.27
1/4	6.35	5/8	15.87	15/16	23.81	1 3/4	1 3/4	7/32	5.56	7/32	5.56	1 5/8	41.27
1/4	6.35	5/8	15.87	31/32	24.61	1 3/4	1 3/4	7/32	5.56	7/32	5.56	1 5/8	41.27

www.globaltungsten.com

B		E		D		M	A	L		T		C	
inch	mm	inch	mm	inch	mm	inch	inch	inch	mm	inch	mm	inch	mm
1/4	6.35	5/8	15.87	1	25.40	1 3/4	1 3/4	7/32	5.56	7/32	5.56	1 5/8	41.27
1/4	6.35	5/8	15.87	1 1/8	28.57	1 3/4	1 3/4	7/32	5.56	7/32	5.56	1 5/8	41.27
1/4	6.35	5/8	15.87	1 1/4	31.75	1 3/4	1 3/4	7/32	5.56	7/32	5.56	1 5/8	41.27
1/4	6.35	5/8	15.87	1 3/8	34.92	1 3/4	1 3/4	7/32	5.56	7/32	5.56	1 5/8	41.27
1/4	6.35	5/8	15.87	1 1/2	38.10	1 3/4	1 3/4	7/32	5.56	7/32	5.56	1 5/8	41.27
9/32	7.14	5/8	15.87	25/32	19.84	1 3/4	1 3/4	7/32	5.56	7/32	5.56	1 5/8	41.27
9/32	7.14	5/8	15.87	13/16	20.64	1 3/4	1 3/4	7/32	5.56	7/32	5.56	1 5/8	41.27
9/32	7.14	5/8	15.87	27/32	21.43	1 3/4	1 3/4	7/32	5.56	7/32	5.56	1 5/8	41.27
9/32	7.14	5/8	15.87	7/8	22.22	1 3/4	1 3/4	7/32	5.56	7/32	5.56	1 5/8	41.27
9/32	7.14	5/8	15.87	29/32	23.02	1 3/4	1 3/4	7/32	5.56	7/32	5.56	1 5/8	41.27
9/32	7.14	5/8	15.87	15/16	23.81	1 3/4	1 3/4	7/32	5.56	7/32	5.56	1 5/8	41.27
9/32	7.14	5/8	15.87	31/32	24.61	1 3/4	1 3/4	7/32	5.56	7/32	5.56	1 5/8	41.27
9/32	7.14	5/8	15.87	1	25.40	1 3/4	1 3/4	7/32	5.56	7/32	5.56	1 5/8	41.27
9/32	7.14	5/8	15.87	1 1/8	28.57	1 3/4	1 3/4	7/32	5.56	7/32	5.56	1 5/8	41.27
9/32	7.14	5/8	15.87	1 1/4	31.75	1 3/4	1 3/4	7/32	5.56	7/32	5.56	1 5/8	41.27
9/32	7.14	5/8	15.87	1 3/8	34.92	1 3/4	1 3/4	7/32	5.56	7/32	5.56	1 5/8	41.27
9/32	7.14	5/8	15.87	1 1/2	38.10	1 3/4	1 3/4	7/32	5.56	7/32	5.56	1 5/8	41.27
5/16	7.94	5/8	15.87	25/32	19.84	1 3/4	1 3/4	7/32	5.56	7/32	5.56	1 5/8	41.27
5/16	7.94	5/8	15.87	13/16	20.64	1 3/4	1 3/4	7/32	5.56	7/32	5.56	1 5/8	41.27
5/16	7.94	5/8	15.87	27/32	21.43	1 3/4	1 3/4	7/32	5.56	7/32	5.56	1 5/8	41.27
5/16	7.94	5/8	15.87	7/8	22.22	1 3/4	1 3/4	7/32	5.56	7/32	5.56	1 5/8	41.27
5/16	7.94	5/8	15.87	29/32	23.02	1 3/4	1 3/4	7/32	5.56	7/32	5.56	1 5/8	41.27
5/16	7.94	5/8	15.87	15/16	23.81	1 3/4	1 3/4	7/32	5.56	7/32	5.56	1 5/8	41.27
5/16	7.94	5/8	15.87	31/32	24.61	1 3/4	1 3/4	7/32	5.56	7/32	5.56	1 5/8	41.27
5/16	7.94	5/8	15.87	1	25.40	1 3/4	1 3/4	7/32	5.56	7/32	5.56	1 5/8	41.27
5/16	7.94	5/8	15.87	1 1/8	28.57	1 3/4	1 3/4	7/32	5.56	7/32	5.56	1 5/8	41.27
5/16	7.94	5/8	15.87	1 1/4	31.75	1 3/4	1 3/4	7/32	5.56	7/32	5.56	1 5/8	41.27
5/16	7.94	5/8	15.87	1 3/8	34.92	1 3/4	1 3/4	7/32	5.56	7/32	5.56	1 5/8	41.27
5/16	7.94	5/8	15.87	1 1/2	38.10	1 3/4	1 3/4	7/32	5.56	7/32	5.56	1 5/8	41.27
11/32	8.73	5/8	15.87	25/32	19.84	1 3/4	1 3/4	7/32	5.56	7/32	5.56	1 5/8	41.27
11/32	8.73	5/8	15.87	13/16	20.64	1 3/4	1 3/4	7/32	5.56	7/32	5.56	1 5/8	41.27
11/32	8.73	5/8	15.87	27/32	21.43	1 3/4	1 3/4	7/32	5.56	7/32	5.56	1 5/8	41.27
11/32	8.73	5/8	15.87	7/8	22.22	1 3/4	1 3/4	7/32	5.56	7/32	5.56	1 5/8	41.27
11/32	8.73	5/8	15.87	29/32	23.02	1 3/4	1 3/4	7/32	5.56	7/32	5.56	1 5/8	41.27
11/32	8.73	5/8	15.87	15/16	23.81	1 3/4	1 3/4	7/32	5.56	7/32	5.56	1 5/8	41.27
11/32	8.73	5/8	15.87	31/32	24.61	1 3/4	1 3/4	7/32	5.56	7/32	5.56	1 5/8	41.27
11/32	8.73	5/8	15.87	1	25.40	1 3/4	1 3/4	7/32	5.56	7/32	5.56	1 5/8	41.27
11/32	8.73	5/8	15.87	1 1/8	28.57	1 3/4	1 3/4	7/32	5.56	7/32	5.56	1 5/8	41.27
11/32	8.73	5/8	15.87	1 1/4	31.75	1 3/4	1 3/4	7/32	5.56	7/32	5.56	1 5/8	41.27
11/32	8.73	5/8	15.87	1 3/8	34.92	1 3/4	1 3/4	7/32	5.56	7/32	5.56	1 5/8	41.27
11/32	8.73	5/8	15.87	1 1/2	38.10	1 3/4	1 3/4	7/32	5.56	7/32	5.56	1 5/8	41.27
3/8	9.52	5/8	15.87	25/32	19.84	1 3/4	1 3/4	7/32	5.56	7/32	5.56	1 5/8	41.27
3/8	9.52	5/8	15.87	13/16	20.64	1 3/4	1 3/4	7/32	5.56	7/32	5.56	1 5/8	41.27
3/8	9.52	5/8	15.87	27/32	21.43	1 3/4	1 3/4	7/32	5.56	7/32	5.56	1 5/8	41.27
3/8	9.52	5/8	15.87	7/8	22.22	1 3/4	1 3/4	7/32	5.56	7/32	5.56	1 5/8	41.27

www.globaltungsters.com

B		E		D		M	A	L		T		C	
inch	mm	inch	mm	inch	mm	inch	inch	inch	mm	inch	mm	inch	mm
3/8	9.52	5/8	15.87	29/32	23.02	1 3/4	1 3/4	7/32	5.56	7/32	5.56	1 5/8	41.27
3/8	9.52	5/8	15.87	15/16	23.81	1 3/4	1 3/4	7/32	5.56	7/32	5.56	1 5/8	41.27
3/8	9.52	5/8	15.87	31/32	24.61	1 3/4	1 3/4	7/32	5.56	7/32	5.56	1 5/8	41.27
3/8	9.52	5/8	15.87	1	25.40	1 3/4	1 3/4	7/32	5.56	7/32	5.56	1 5/8	41.27
3/8	9.52	5/8	15.87	1 1/8	28.57	1 3/4	1 3/4	7/32	5.56	7/32	5.56	1 5/8	41.27
3/8	9.52	5/8	15.87	1 1/4	31.75	1 3/4	1 3/4	7/32	5.56	7/32	5.56	1 5/8	41.27
3/8	9.52	5/8	15.87	1 3/8	34.92	1 3/4	1 3/4	7/32	5.56	7/32	5.56	1 5/8	41.27
3/8	9.52	5/8	15.87	1 1/2	38.10	1 3/4	1 3/4	7/32	5.56	7/32	5.56	1 5/8	41.27
13/32	10.32	5/8	15.87	25/32	19.84	1 3/4	1 3/4	7/32	5.56	7/32	5.56	1 5/8	41.27
13/32	10.32	5/8	15.87	13/16	20.64	1 3/4	1 3/4	7/32	5.56	7/32	5.56	1 5/8	41.27
13/32	10.32	5/8	15.87	27/32	21.43	1 3/4	1 3/4	7/32	5.56	7/32	5.56	1 5/8	41.27
13/32	10.32	5/8	15.87	7/8	22.22	1 3/4	1 3/4	7/32	5.56	7/32	5.56	1 5/8	41.27
13/32	10.32	5/8	15.87	29/32	23.02	1 3/4	1 3/4	7/32	5.56	7/32	5.56	1 5/8	41.27
13/32	10.32	5/8	15.87	15/16	23.81	1 3/4	1 3/4	7/32	5.56	7/32	5.56	1 5/8	41.27
13/32	10.32	5/8	15.87	31/32	24.61	1 3/4	1 3/4	7/32	5.56	7/32	5.56	1 5/8	41.27
13/32	10.32	5/8	15.87	1	25.40	1 3/4	1 3/4	7/32	5.56	7/32	5.56	1 5/8	41.27
13/32	10.32	5/8	15.87	1 1/8	28.57	1 3/4	1 3/4	7/32	5.56	7/32	5.56	1 5/8	41.27
13/32	10.32	5/8	15.87	1 1/4	31.75	1 3/4	1 3/4	7/32	5.56	7/32	5.56	1 5/8	41.27
13/32	10.32	5/8	15.87	1 3/8	34.92	1 3/4	1 3/4	7/32	5.56	7/32	5.56	1 5/8	41.27
13/32	10.32	5/8	15.87	1 1/2	38.10	1 3/4	1 3/4	7/32	5.56	7/32	5.56	1 5/8	41.27
7/16	11.11	5/8	15.87	25/32	19.84	1 3/4	1 3/4	7/32	5.56	7/32	5.56	1 5/8	41.27
7/16	11.11	5/8	15.87	13/16	20.64	1 3/4	1 3/4	7/32	5.56	7/32	5.56	1 5/8	41.27
7/16	11.11	5/8	15.87	27/32	21.43	1 3/4	1 3/4	7/32	5.56	7/32	5.56	1 5/8	41.27
7/16	11.11	5/8	15.87	7/8	22.22	1 3/4	1 3/4	7/32	5.56	7/32	5.56	1 5/8	41.27
7/16	11.11	5/8	15.87	29/32	23.02	1 3/4	1 3/4	7/32	5.56	7/32	5.56	1 5/8	41.27
7/16	11.11	5/8	15.87	15/16	23.81	1 3/4	1 3/4	7/32	5.56	7/32	5.56	1 5/8	41.27
7/16	11.11	5/8	15.87	31/32	24.61	1 3/4	1 3/4	7/32	5.56	7/32	5.56	1 5/8	41.27
7/16	11.11	5/8	15.87	1	25.40	1 3/4	1 3/4	7/32	5.56	7/32	5.56	1 5/8	41.27
7/16	11.11	5/8	15.87	1 1/8	28.57	1 3/4	1 3/4	7/32	5.56	7/32	5.56	1 5/8	41.27
7/16	11.11	5/8	15.87	1 1/4	31.75	1 3/4	1 3/4	7/32	5.56	7/32	5.56	1 5/8	41.27
7/16	11.11	5/8	15.87	1 3/8	34.92	1 3/4	1 3/4	7/32	5.56	7/32	5.56	1 5/8	41.27
7/16	11.11	5/8	15.87	1 1/2	38.10	1 3/4	1 3/4	7/32	5.56	7/32	5.56	1 5/8	41.27
15/32	11.91	5/8	15.87	25/32	19.84	1 3/4	1 3/4	7/32	5.56	7/32	5.56	1 5/8	41.27
15/32	11.91	5/8	15.87	13/16	20.64	1 3/4	1 3/4	7/32	5.56	7/32	5.56	1 5/8	41.27
15/32	11.91	5/8	15.87	27/32	21.43	1 3/4	1 3/4	7/32	5.56	7/32	5.56	1 5/8	41.27
15/32	11.91	5/8	15.87	7/8	22.22	1 3/4	1 3/4	7/32	5.56	7/32	5.56	1 5/8	41.27
15/32	11.91	5/8	15.87	29/32	23.02	1 3/4	1 3/4	7/32	5.56	7/32	5.56	1 5/8	41.27
15/32	11.91	5/8	15.87	15/16	23.81	1 3/4	1 3/4	7/32	5.56	7/32	5.56	1 5/8	41.27
15/32	11.91	5/8	15.87	31/32	24.61	1 3/4	1 3/4	7/32	5.56	7/32	5.56	1 5/8	41.27
15/32	11.91	5/8	15.87	1	25.40	1 3/4	1 3/4	7/32	5.56	7/32	5.56	1 5/8	41.27
15/32	11.91	5/8	15.87	1 1/8	28.57	1 3/4	1 3/4	7/32	5.56	7/32	5.56	1 5/8	41.27
15/32	11.91	5/8	15.87	1 1/4	31.75	1 3/4	1 3/4	7/32	5.56	7/32	5.56	1 5/8	41.27
15/32	11.91	5/8	15.87	1 3/8	34.92	1 3/4	1 3/4	7/32	5.56	7/32	5.56	1 5/8	41.27
15/32	11.91	5/8	15.87	1 1/2	38.10	1 3/4	1 3/4	7/32	5.56	7/32	5.56	1 5/8	41.27
1/2	12.70	5/8	15.87	25/32	19.84	1 3/4	1 3/4	7/32	5.56	7/32	5.56	1 5/8	41.27

www.globaltungsten.com

B		E		D		M	A	L		T		C	
inch	mm	inch	mm	inch	mm	inch	inch	inch	mm	inch	mm	inch	mm
1/2	12.70	5/8	15.87	13/16	20.64	1 3/4	1 3/4	7/32	5.56	7/32	5.56	1 5/8	41.27
1/2	12.70	5/8	15.87	27/32	21.43	1 3/4	1 3/4	7/32	5.56	7/32	5.56	1 5/8	41.27
1/2	12.70	5/8	15.87	7/8	22.22	1 3/4	1 3/4	7/32	5.56	7/32	5.56	1 5/8	41.27
1/2	12.70	5/8	15.87	29/32	23.02	1 3/4	1 3/4	7/32	5.56	7/32	5.56	1 5/8	41.27
1/2	12.70	5/8	15.87	15/16	23.81	1 3/4	1 3/4	7/32	5.56	7/32	5.56	1 5/8	41.27
1/2	12.70	5/8	15.87	31/32	24.61	1 3/4	1 3/4	7/32	5.56	7/32	5.56	1 5/8	41.27
1/2	12.70	5/8	15.87	1	25.40	1 3/4	1 3/4	7/32	5.56	7/32	5.56	1 5/8	41.27
1/2	12.70	5/8	15.87	1 1/8	28.57	1 3/4	1 3/4	7/32	5.56	7/32	5.56	1 5/8	41.27
1/2	12.70	5/8	15.87	1 1/4	31.75	1 3/4	1 3/4	7/32	5.56	7/32	5.56	1 5/8	41.27
1/2	12.70	5/8	15.87	1 3/8	34.92	1 3/4	1 3/4	7/32	5.56	7/32	5.56	1 5/8	41.27
1/2	12.70	5/8	15.87	1 1/2	38.10	1 3/4	1 3/4	7/32	5.56	7/32	5.56	1 5/8	41.27
17/32	13.49	5/8	15.87	25/32	19.84	1 3/4	1 3/4	7/32	5.56	7/32	5.56	1 5/8	41.27
17/32	13.49	5/8	15.87	13/16	20.64	1 3/4	1 3/4	7/32	5.56	7/32	5.56	1 5/8	41.27
17/32	13.49	5/8	15.87	27/32	21.43	1 3/4	1 3/4	7/32	5.56	7/32	5.56	1 5/8	41.27
17/32	13.49	5/8	15.87	7/8	22.22	1 3/4	1 3/4	7/32	5.56	7/32	5.56	1 5/8	41.27
17/32	13.49	5/8	15.87	29/32	23.02	1 3/4	1 3/4	7/32	5.56	7/32	5.56	1 5/8	41.27
17/32	13.49	5/8	15.87	15/16	23.81	1 3/4	1 3/4	7/32	5.56	7/32	5.56	1 5/8	41.27
17/32	13.49	5/8	15.87	31/32	24.61	1 3/4	1 3/4	7/32	5.56	7/32	5.56	1 5/8	41.27
17/32	13.49	5/8	15.87	1	25.40	1 3/4	1 3/4	7/32	5.56	7/32	5.56	1 5/8	41.27
17/32	13.49	5/8	15.87	1 1/8	28.57	1 3/4	1 3/4	7/32	5.56	7/32	5.56	1 5/8	41.27
17/32	13.49	5/8	15.87	1 1/4	31.75	1 3/4	1 3/4	7/32	5.56	7/32	5.56	1 5/8	41.27
17/32	13.49	5/8	15.87	1 3/8	34.92	1 3/4	1 3/4	7/32	5.56	7/32	5.56	1 5/8	41.27
17/32	13.49	5/8	15.87	1 1/2	38.10	1 3/4	1 3/4	7/32	5.56	7/32	5.56	1 5/8	41.27
9/16	14.29	5/8	15.87	25/32	19.84	1 3/4	1 3/4	7/32	5.56	7/32	5.56	1 5/8	41.27
9/16	14.29	5/8	15.87	13/16	20.64	1 3/4	1 3/4	7/32	5.56	7/32	5.56	1 5/8	41.27
9/16	14.29	5/8	15.87	27/32	21.43	1 3/4	1 3/4	7/32	5.56	7/32	5.56	1 5/8	41.27
9/16	14.29	5/8	15.87	7/8	22.22	1 3/4	1 3/4	7/32	5.56	7/32	5.56	1 5/8	41.27
9/16	14.29	5/8	15.87	29/32	23.02	1 3/4	1 3/4	7/32	5.56	7/32	5.56	1 5/8	41.27
9/16	14.29	5/8	15.87	15/16	23.81	1 3/4	1 3/4	7/32	5.56	7/32	5.56	1 5/8	41.27
9/16	14.29	5/8	15.87	31/32	24.61	1 3/4	1 3/4	7/32	5.56	7/32	5.56	1 5/8	41.27
9/16	14.29	5/8	15.87	1	25.40	1 3/4	1 3/4	7/32	5.56	7/32	5.56	1 5/8	41.27
9/16	14.29	5/8	15.87	1 1/8	28.57	1 3/4	1 3/4	7/32	5.56	7/32	5.56	1 5/8	41.27
9/16	14.29	5/8	15.87	1 1/4	31.75	1 3/4	1 3/4	7/32	5.56	7/32	5.56	1 5/8	41.27
9/16	14.29	5/8	15.87	1 3/8	34.92	1 3/4	1 3/4	7/32	5.56	7/32	5.56	1 5/8	41.27
9/16	14.29	5/8	15.87	1 1/2	38.10	1 3/4	1 3/4	7/32	5.56	7/32	5.56	1 5/8	41.27
19/32	15.08	5/8	15.87	25/32	19.84	1 3/4	1 3/4	7/32	5.56	7/32	5.56	1 5/8	41.27
19/32	15.08	5/8	15.87	13/16	20.64	1 3/4	1 3/4	7/32	5.56	7/32	5.56	1 5/8	41.27
19/32	15.08	5/8	15.87	27/32	21.43	1 3/4	1 3/4	7/32	5.56	7/32	5.56	1 5/8	41.27
19/32	15.08	5/8	15.87	7/8	22.22	1 3/4	1 3/4	7/32	5.56	7/32	5.56	1 5/8	41.27
19/32	15.08	5/8	15.87	29/32	23.02	1 3/4	1 3/4	7/32	5.56	7/32	5.56	1 5/8	41.27
19/32	15.08	5/8	15.87	15/16	23.81	1 3/4	1 3/4	7/32	5.56	7/32	5.56	1 5/8	41.27
19/32	15.08	5/8	15.87	31/32	24.61	1 3/4	1 3/4	7/32	5.56	7/32	5.56	1 5/8	41.27
19/32	15.08	5/8	15.87	1	25.40	1 3/4	1 3/4	7/32	5.56	7/32	5.56	1 5/8	41.27
19/32	15.08	5/8	15.87	1 1/8	28.57	1 3/4	1 3/4	7/32	5.56	7/32	5.56	1 5/8	41.27
19/32	15.08	5/8	15.87	1 1/4	31.75	1 3/4	1 3/4	7/32	5.56	7/32	5.56	1 5/8	41.27

www.globaltungsten.com

B		E		D		M	A	L		T		C	
inch	mm	inch	mm	inch	mm	inch	inch	inch	mm	inch	mm	inch	mm
19/32	15.08	5/8	15.87	1 3/8	34.92	1 3/4	1 3/4	7/32	5.56	7/32	5.56	1 5/8	41.27
19/32	15.08	5/8	15.87	1 1/2	38.10	1 3/4	1 3/4	7/32	5.56	7/32	5.56	1 5/8	41.27
5/8	15.87	5/8	15.87	25/32	19.84	1 3/4	1 3/4	7/32	5.56	7/32	5.56	1 5/8	41.27
5/8	15.87	5/8	15.87	13/16	20.64	1 3/4	1 3/4	7/32	5.56	7/32	5.56	1 5/8	41.27
5/8	15.87	5/8	15.87	27/32	21.43	1 3/4	1 3/4	7/32	5.56	7/32	5.56	1 5/8	41.27
5/8	15.87	5/8	15.87	7/8	22.22	1 3/4	1 3/4	7/32	5.56	7/32	5.56	1 5/8	41.27
5/8	15.87	5/8	15.87	29/32	23.02	1 3/4	1 3/4	7/32	5.56	7/32	5.56	1 5/8	41.27
5/8	15.87	5/8	15.87	15/16	23.81	1 3/4	1 3/4	7/32	5.56	7/32	5.56	1 5/8	41.27
5/8	15.87	5/8	15.87	31/32	24.61	1 3/4	1 3/4	7/32	5.56	7/32	5.56	1 5/8	41.27
5/8	15.87	5/8	15.87	1	25.40	1 3/4	1 3/4	7/32	5.56	7/32	5.56	1 5/8	41.27
5/8	15.87	5/8	15.87	1 1/8	28.57	1 3/4	1 3/4	7/32	5.56	7/32	5.56	1 5/8	41.27
5/8	15.87	5/8	15.87	1 1/4	31.75	1 3/4	1 3/4	7/32	5.56	7/32	5.56	1 5/8	41.27
5/8	15.87	5/8	15.87	1 3/8	34.92	1 3/4	1 3/4	7/32	5.56	7/32	5.56	1 5/8	41.27
5/8	15.87	5/8	15.87	1 1/2	38.10	1 3/4	1 3/4	7/32	5.56	7/32	5.56	1 5/8	41.27
3/16	4.76	1/2	12.70	21/32	16.67	1 3/4	1 3/4	7/32	5.56	7/32	5.56	1 5/8	41.27
3/16	4.76	1/2	12.70	11/16	17.46	1 3/4	1 3/4	7/32	5.56	7/32	5.56	1 5/8	41.27
3/16	4.76	1/2	12.70	23/32	18.26	1 3/4	1 3/4	7/32	5.56	7/32	5.56	1 5/8	41.27
3/16	4.76	1/2	12.70	3/4	19.05	1 3/4	1 3/4	7/32	5.56	7/32	5.56	1 5/8	41.27
3/16	4.76	1/2	12.70	25/32	19.84	1 3/4	1 3/4	7/32	5.56	7/32	5.56	1 5/8	41.27
3/16	4.76	1/2	12.70	13/16	20.64	1 3/4	1 3/4	7/32	5.56	7/32	5.56	1 5/8	41.27
3/16	4.76	1/2	12.70	27/32	21.43	1 3/4	1 3/4	7/32	5.56	7/32	5.56	1 5/8	41.27
3/16	4.76	1/2	12.70	7/8	22.22	1 3/4	1 3/4	7/32	5.56	7/32	5.56	1 5/8	41.27
3/16	4.76	1/2	12.70	29/32	23.02	1 3/4	1 3/4	7/32	5.56	7/32	5.56	1 5/8	41.27
3/16	4.76	1/2	12.70	15/16	23.81	1 3/4	1 3/4	7/32	5.56	7/32	5.56	1 5/8	41.27
3/16	4.76	1/2	12.70	31/32	24.61	1 3/4	1 3/4	7/32	5.56	7/32	5.56	1 5/8	41.27
3/16	4.76	1/2	12.70	1	25.40	1 3/4	1 3/4	7/32	5.56	7/32	5.56	1 5/8	41.27
3/16	4.76	1/2	12.70	1 1/8	28.57	1 3/4	1 3/4	7/32	5.56	7/32	5.56	1 5/8	41.27
3/16	4.76	1/2	12.70	1 1/4	31.75	1 3/4	1 3/4	7/32	5.56	7/32	5.56	1 5/8	41.27
3/16	4.76	1/2	12.70	1 3/8	34.92	1 3/4	1 3/4	7/32	5.56	7/32	5.56	1 5/8	41.27
3/16	4.76	1/2	12.70	1 1/2	38.10	1 3/4	1 3/4	7/32	5.56	7/32	5.56	1 5/8	41.27
7/32	5.56	1/2	12.70	21/32	16.67	1 3/4	1 3/4	7/32	5.56	7/32	5.56	1 5/8	41.27
7/32	5.56	1/2	12.70	11/16	17.46	1 3/4	1 3/4	7/32	5.56	7/32	5.56	1 5/8	41.27
7/32	5.56	1/2	12.70	23/32	18.26	1 3/4	1 3/4	7/32	5.56	7/32	5.56	1 5/8	41.27
7/32	5.56	1/2	12.70	3/4	19.05	1 3/4	1 3/4	7/32	5.56	7/32	5.56	1 5/8	41.27
7/32	5.56	1/2	12.70	25/32	19.84	1 3/4	1 3/4	7/32	5.56	7/32	5.56	1 5/8	41.27
7/32	5.56	1/2	12.70	13/16	20.64	1 3/4	1 3/4	7/32	5.56	7/32	5.56	1 5/8	41.27
7/32	5.56	1/2	12.70	27/32	21.43	1 3/4	1 3/4	7/32	5.56	7/32	5.56	1 5/8	41.27
7/32	5.56	1/2	12.70	7/8	22.22	1 3/4	1 3/4	7/32	5.56	7/32	5.56	1 5/8	41.27
7/32	5.56	1/2	12.70	29/32	23.02	1 3/4	1 3/4	7/32	5.56	7/32	5.56	1 5/8	41.27
7/32	5.56	1/2	12.70	15/16	23.81	1 3/4	1 3/4	7/32	5.56	7/32	5.56	1 5/8	41.27
7/32	5.56	1/2	12.70	31/32	24.61	1 3/4	1 3/4	7/32	5.56	7/32	5.56	1 5/8	41.27
7/32	5.56	1/2	12.70	1	25.40	1 3/4	1 3/4	7/32	5.56	7/32	5.56	1 5/8	41.27
7/32	5.56	1/2	12.70	1 1/8	28.57	1 3/4	1 3/4	7/32	5.56	7/32	5.56	1 5/8	41.27
7/32	5.56	1/2	12.70	1 1/4	31.75	1 3/4	1 3/4	7/32	5.56	7/32	5.56	1 5/8	41.27
7/32	5.56	1/2	12.70	1 3/8	34.92	1 3/4	1 3/4	7/32	5.56	7/32	5.56	1 5/8	41.27

www.globaltungsten.com

B		E		D		M	A	L		T		C	
inch	mm	inch	mm	inch	mm	inch	inch	inch	mm	inch	mm	inch	mm
7/32	5.56	1/2	12.70	1 1/2	38.10	1 3/4	1 3/4	7/32	5.56	7/32	5.56	1 5/8	41.27
1/4	6.35	1/2	12.70	21/32	16.67	1 3/4	1 3/4	7/32	5.56	7/32	5.56	1 5/8	41.27
1/4	6.35	1/2	12.70	11/16	17.46	1 3/4	1 3/4	7/32	5.56	7/32	5.56	1 5/8	41.27
1/4	6.35	1/2	12.70	23/32	18.26	1 3/4	1 3/4	7/32	5.56	7/32	5.56	1 5/8	41.27
1/4	6.35	1/2	12.70	3/4	19.05	1 3/4	1 3/4	7/32	5.56	7/32	5.56	1 5/8	41.27
1/4	6.35	1/2	12.70	25/32	19.84	1 3/4	1 3/4	7/32	5.56	7/32	5.56	1 5/8	41.27
1/4	6.35	1/2	12.70	13/16	20.64	1 3/4	1 3/4	7/32	5.56	7/32	5.56	1 5/8	41.27
1/4	6.35	1/2	12.70	27/32	21.43	1 3/4	1 3/4	7/32	5.56	7/32	5.56	1 5/8	41.27
1/4	6.35	1/2	12.70	7/8	22.22	1 3/4	1 3/4	7/32	5.56	7/32	5.56	1 5/8	41.27
1/4	6.35	1/2	12.70	29/32	23.02	1 3/4	1 3/4	7/32	5.56	7/32	5.56	1 5/8	41.27
1/4	6.35	1/2	12.70	15/16	23.81	1 3/4	1 3/4	7/32	5.56	7/32	5.56	1 5/8	41.27
1/4	6.35	1/2	12.70	31/32	24.61	1 3/4	1 3/4	7/32	5.56	7/32	5.56	1 5/8	41.27
1/4	6.35	1/2	12.70	1	25.40	1 3/4	1 3/4	7/32	5.56	7/32	5.56	1 5/8	41.27
1/4	6.35	1/2	12.70	1 1/8	28.57	1 3/4	1 3/4	7/32	5.56	7/32	5.56	1 5/8	41.27
1/4	6.35	1/2	12.70	1 1/4	31.75	1 3/4	1 3/4	7/32	5.56	7/32	5.56	1 5/8	41.27
1/4	6.35	1/2	12.70	1 3/8	34.92	1 3/4	1 3/4	7/32	5.56	7/32	5.56	1 5/8	41.27
1/4	6.35	1/2	12.70	1 1/2	38.10	1 3/4	1 3/4	7/32	5.56	7/32	5.56	1 5/8	41.27
9/32	7.14	1/2	12.70	21/32	16.67	1 3/4	1 3/4	7/32	5.56	7/32	5.56	1 5/8	41.27
9/32	7.14	1/2	12.70	11/16	17.46	1 3/4	1 3/4	7/32	5.56	7/32	5.56	1 5/8	41.27
9/32	7.14	1/2	12.70	23/32	18.26	1 3/4	1 3/4	7/32	5.56	7/32	5.56	1 5/8	41.27
9/32	7.14	1/2	12.70	3/4	19.05	1 3/4	1 3/4	7/32	5.56	7/32	5.56	1 5/8	41.27
9/32	7.14	1/2	12.70	25/32	19.84	1 3/4	1 3/4	7/32	5.56	7/32	5.56	1 5/8	41.27
9/32	7.14	1/2	12.70	13/16	20.64	1 3/4	1 3/4	7/32	5.56	7/32	5.56	1 5/8	41.27
9/32	7.14	1/2	12.70	27/32	21.43	1 3/4	1 3/4	7/32	5.56	7/32	5.56	1 5/8	41.27
9/32	7.14	1/2	12.70	7/8	22.22	1 3/4	1 3/4	7/32	5.56	7/32	5.56	1 5/8	41.27
9/32	7.14	1/2	12.70	29/32	23.02	1 3/4	1 3/4	7/32	5.56	7/32	5.56	1 5/8	41.27
9/32	7.14	1/2	12.70	15/16	23.81	1 3/4	1 3/4	7/32	5.56	7/32	5.56	1 5/8	41.27
9/32	7.14	1/2	12.70	31/32	24.61	1 3/4	1 3/4	7/32	5.56	7/32	5.56	1 5/8	41.27
9/32	7.14	1/2	12.70	1	25.40	1 3/4	1 3/4	7/32	5.56	7/32	5.56	1 5/8	41.27
9/32	7.14	1/2	12.70	1 1/8	28.57	1 3/4	1 3/4	7/32	5.56	7/32	5.56	1 5/8	41.27
9/32	7.14	1/2	12.70	1 1/4	31.75	1 3/4	1 3/4	7/32	5.56	7/32	5.56	1 5/8	41.27
9/32	7.14	1/2	12.70	1 3/8	34.92	1 3/4	1 3/4	7/32	5.56	7/32	5.56	1 5/8	41.27
9/32	7.14	1/2	12.70	1 1/2	38.10	1 3/4	1 3/4	7/32	5.56	7/32	5.56	1 5/8	41.27
5/16	7.94	1/2	12.70	21/32	16.67	1 3/4	1 3/4	7/32	5.56	7/32	5.56	1 5/8	41.27
5/16	7.94	1/2	12.70	11/16	17.46	1 3/4	1 3/4	7/32	5.56	7/32	5.56	1 5/8	41.27
5/16	7.94	1/2	12.70	23/32	18.26	1 3/4	1 3/4	7/32	5.56	7/32	5.56	1 5/8	41.27
5/16	7.94	1/2	12.70	3/4	19.05	1 3/4	1 3/4	7/32	5.56	7/32	5.56	1 5/8	41.27
5/16	7.94	1/2	12.70	25/32	19.84	1 3/4	1 3/4	7/32	5.56	7/32	5.56	1 5/8	41.27
5/16	7.94	1/2	12.70	13/16	20.64	1 3/4	1 3/4	7/32	5.56	7/32	5.56	1 5/8	41.27
5/16	7.94	1/2	12.70	27/32	21.43	1 3/4	1 3/4	7/32	5.56	7/32	5.56	1 5/8	41.27
5/16	7.94	1/2	12.70	7/8	22.22	1 3/4	1 3/4	7/32	5.56	7/32	5.56	1 5/8	41.27
5/16	7.94	1/2	12.70	29/32	23.02	1 3/4	1 3/4	7/32	5.56	7/32	5.56	1 5/8	41.27
5/16	7.94	1/2	12.70	15/16	23.81	1 3/4	1 3/4	7/32	5.56	7/32	5.56	1 5/8	41.27
5/16	7.94	1/2	12.70	31/32	24.61	1 3/4	1 3/4	7/32	5.56	7/32	5.56	1 5/8	41.27
5/16	7.94	1/2	12.70	1	25.40	1 3/4	1 3/4	7/32	5.56	7/32	5.56	1 5/8	41.27

www.globaltungsten.com

B		E		D		M	A	L		T		C	
inch	mm	inch	mm	inch	mm	inch	inch	inch	mm	inch	mm	inch	mm
5/16	7.94	1/2	12.70	1 1/8	28.57	1 3/4	1 3/4	7/32	5.56	7/32	5.56	1 5/8	41.27
5/16	7.94	1/2	12.70	1 1/4	31.75	1 3/4	1 3/4	7/32	5.56	7/32	5.56	1 5/8	41.27
5/16	7.94	1/2	12.70	1 3/8	34.92	1 3/4	1 3/4	7/32	5.56	7/32	5.56	1 5/8	41.27
5/16	7.94	1/2	12.70	1 1/2	38.10	1 3/4	1 3/4	7/32	5.56	7/32	5.56	1 5/8	41.27
11/32	8.73	1/2	12.70	21/32	16.67	1 3/4	1 3/4	7/32	5.56	7/32	5.56	1 5/8	41.27
11/32	8.73	1/2	12.70	11/16	17.46	1 3/4	1 3/4	7/32	5.56	7/32	5.56	1 5/8	41.27
11/32	8.73	1/2	12.70	23/32	18.26	1 3/4	1 3/4	7/32	5.56	7/32	5.56	1 5/8	41.27
11/32	8.73	1/2	12.70	3/4	19.05	1 3/4	1 3/4	7/32	5.56	7/32	5.56	1 5/8	41.27
11/32	8.73	1/2	12.70	25/32	19.84	1 3/4	1 3/4	7/32	5.56	7/32	5.56	1 5/8	41.27
11/32	8.73	1/2	12.70	13/16	20.64	1 3/4	1 3/4	7/32	5.56	7/32	5.56	1 5/8	41.27
11/32	8.73	1/2	12.70	27/32	21.43	1 3/4	1 3/4	7/32	5.56	7/32	5.56	1 5/8	41.27
11/32	8.73	1/2	12.70	7/8	22.22	1 3/4	1 3/4	7/32	5.56	7/32	5.56	1 5/8	41.27
11/32	8.73	1/2	12.70	29/32	23.02	1 3/4	1 3/4	7/32	5.56	7/32	5.56	1 5/8	41.27
11/32	8.73	1/2	12.70	15/16	23.81	1 3/4	1 3/4	7/32	5.56	7/32	5.56	1 5/8	41.27
11/32	8.73	1/2	12.70	31/32	24.61	1 3/4	1 3/4	7/32	5.56	7/32	5.56	1 5/8	41.27
11/32	8.73	1/2	12.70	1	25.40	1 3/4	1 3/4	7/32	5.56	7/32	5.56	1 5/8	41.27
11/32	8.73	1/2	12.70	1 1/8	28.57	1 3/4	1 3/4	7/32	5.56	7/32	5.56	1 5/8	41.27
11/32	8.73	1/2	12.70	1 1/4	31.75	1 3/4	1 3/4	7/32	5.56	7/32	5.56	1 5/8	41.27
11/32	8.73	1/2	12.70	1 3/8	34.92	1 3/4	1 3/4	7/32	5.56	7/32	5.56	1 5/8	41.27
11/32	8.73	1/2	12.70	1 1/2	38.10	1 3/4	1 3/4	7/32	5.56	7/32	5.56	1 5/8	41.27
3/8	9.52	1/2	12.70	21/32	16.67	1 3/4	1 3/4	7/32	5.56	7/32	5.56	1 5/8	41.27
3/8	9.52	1/2	12.70	11/16	17.46	1 3/4	1 3/4	7/32	5.56	7/32	5.56	1 5/8	41.27
3/8	9.52	1/2	12.70	23/32	18.26	1 3/4	1 3/4	7/32	5.56	7/32	5.56	1 5/8	41.27
3/8	9.52	1/2	12.70	3/4	19.05	1 3/4	1 3/4	7/32	5.56	7/32	5.56	1 5/8	41.27
3/8	9.52	1/2	12.70	25/32	19.84	1 3/4	1 3/4	7/32	5.56	7/32	5.56	1 5/8	41.27
3/8	9.52	1/2	12.70	13/16	20.64	1 3/4	1 3/4	7/32	5.56	7/32	5.56	1 5/8	41.27
3/8	9.52	1/2	12.70	27/32	21.43	1 3/4	1 3/4	7/32	5.56	7/32	5.56	1 5/8	41.27
3/8	9.52	1/2	12.70	7/8	22.22	1 3/4	1 3/4	7/32	5.56	7/32	5.56	1 5/8	41.27
3/8	9.52	1/2	12.70	29/32	23.02	1 3/4	1 3/4	7/32	5.56	7/32	5.56	1 5/8	41.27
3/8	9.52	1/2	12.70	15/16	23.81	1 3/4	1 3/4	7/32	5.56	7/32	5.56	1 5/8	41.27
3/8	9.52	1/2	12.70	31/32	24.61	1 3/4	1 3/4	7/32	5.56	7/32	5.56	1 5/8	41.27
3/8	9.52	1/2	12.70	1	25.40	1 3/4	1 3/4	7/32	5.56	7/32	5.56	1 5/8	41.27
3/8	9.52	1/2	12.70	1 1/8	28.57	1 3/4	1 3/4	7/32	5.56	7/32	5.56	1 5/8	41.27
3/8	9.52	1/2	12.70	1 1/4	31.75	1 3/4	1 3/4	7/32	5.56	7/32	5.56	1 5/8	41.27
3/8	9.52	1/2	12.70	1 3/8	34.92	1 3/4	1 3/4	7/32	5.56	7/32	5.56	1 5/8	41.27
3/8	9.52	1/2	12.70	1 1/2	38.10	1 3/4	1 3/4	7/32	5.56	7/32	5.56	1 5/8	41.27
13/32	10.32	1/2	12.70	21/32	16.67	1 3/4	1 3/4	7/32	5.56	7/32	5.56	1 5/8	41.27
13/32	10.32	1/2	12.70	11/16	17.46	1 3/4	1 3/4	7/32	5.56	7/32	5.56	1 5/8	41.27
13/32	10.32	1/2	12.70	23/32	18.26	1 3/4	1 3/4	7/32	5.56	7/32	5.56	1 5/8	41.27
13/32	10.32	1/2	12.70	3/4	19.05	1 3/4	1 3/4	7/32	5.56	7/32	5.56	1 5/8	41.27
13/32	10.32	1/2	12.70	25/32	19.84	1 3/4	1 3/4	7/32	5.56	7/32	5.56	1 5/8	41.27
13/32	10.32	1/2	12.70	13/16	20.64	1 3/4	1 3/4	7/32	5.56	7/32	5.56	1 5/8	41.27
13/32	10.32	1/2	12.70	27/32	21.43	1 3/4	1 3/4	7/32	5.56	7/32	5.56	1 5/8	41.27
13/32	10.32	1/2	12.70	7/8	22.22	1 3/4	1 3/4	7/32	5.56	7/32	5.56	1 5/8	41.27
13/32	10.32	1/2	12.70	29/32	23.02	1 3/4	1 3/4	7/32	5.56	7/32	5.56	1 5/8	41.27

www.globaltungsten.com

B		E		D		M	A	L		T		C	
inch	mm	inch	mm	inch	mm	inch	inch	inch	mm	inch	mm	inch	mm
13/32	10.32	1/2	12.70	15/16	23.81	1 3/4	1 3/4	7/32	5.56	7/32	5.56	1 5/8	41.27
13/32	10.32	1/2	12.70	31/32	24.61	1 3/4	1 3/4	7/32	5.56	7/32	5.56	1 5/8	41.27
13/32	10.32	1/2	12.70	1	25.40	1 3/4	1 3/4	7/32	5.56	7/32	5.56	1 5/8	41.27
13/32	10.32	1/2	12.70	1 1/8	28.57	1 3/4	1 3/4	7/32	5.56	7/32	5.56	1 5/8	41.27
13/32	10.32	1/2	12.70	1 1/4	31.75	1 3/4	1 3/4	7/32	5.56	7/32	5.56	1 5/8	41.27
13/32	10.32	1/2	12.70	1 3/8	34.92	1 3/4	1 3/4	7/32	5.56	7/32	5.56	1 5/8	41.27
13/32	10.32	1/2	12.70	1 1/2	38.10	1 3/4	1 3/4	7/32	5.56	7/32	5.56	1 5/8	41.27
7/16	11.11	1/2	12.70	21/32	16.67	1 3/4	1 3/4	7/32	5.56	7/32	5.56	1 5/8	41.27
7/16	11.11	1/2	12.70	11/16	17.46	1 3/4	1 3/4	7/32	5.56	7/32	5.56	1 5/8	41.27
7/16	11.11	1/2	12.70	23/32	18.26	1 3/4	1 3/4	7/32	5.56	7/32	5.56	1 5/8	41.27
7/16	11.11	1/2	12.70	3/4	19.05	1 3/4	1 3/4	7/32	5.56	7/32	5.56	1 5/8	41.27
7/16	11.11	1/2	12.70	25/32	19.84	1 3/4	1 3/4	7/32	5.56	7/32	5.56	1 5/8	41.27
7/16	11.11	1/2	12.70	13/16	20.64	1 3/4	1 3/4	7/32	5.56	7/32	5.56	1 5/8	41.27
7/16	11.11	1/2	12.70	27/32	21.43	1 3/4	1 3/4	7/32	5.56	7/32	5.56	1 5/8	41.27
7/16	11.11	1/2	12.70	7/8	22.22	1 3/4	1 3/4	7/32	5.56	7/32	5.56	1 5/8	41.27
7/16	11.11	1/2	12.70	29/32	23.02	1 3/4	1 3/4	7/32	5.56	7/32	5.56	1 5/8	41.27
7/16	11.11	1/2	12.70	15/16	23.81	1 3/4	1 3/4	7/32	5.56	7/32	5.56	1 5/8	41.27
7/16	11.11	1/2	12.70	31/32	24.61	1 3/4	1 3/4	7/32	5.56	7/32	5.56	1 5/8	41.27
7/16	11.11	1/2	12.70	1	25.40	1 3/4	1 3/4	7/32	5.56	7/32	5.56	1 5/8	41.27
7/16	11.11	1/2	12.70	1 1/8	28.57	1 3/4	1 3/4	7/32	5.56	7/32	5.56	1 5/8	41.27
7/16	11.11	1/2	12.70	1 1/4	31.75	1 3/4	1 3/4	7/32	5.56	7/32	5.56	1 5/8	41.27
7/16	11.11	1/2	12.70	1 3/8	34.92	1 3/4	1 3/4	7/32	5.56	7/32	5.56	1 5/8	41.27
7/16	11.11	1/2	12.70	1 1/2	38.10	1 3/4	1 3/4	7/32	5.56	7/32	5.56	1 5/8	41.27
15/32	11.91	1/2	12.70	21/32	16.67	1 3/4	1 3/4	7/32	5.56	7/32	5.56	1 5/8	41.27
15/32	11.91	1/2	12.70	11/16	17.46	1 3/4	1 3/4	7/32	5.56	7/32	5.56	1 5/8	41.27
15/32	11.91	1/2	12.70	23/32	18.26	1 3/4	1 3/4	7/32	5.56	7/32	5.56	1 5/8	41.27
15/32	11.91	1/2	12.70	3/4	19.05	1 3/4	1 3/4	7/32	5.56	7/32	5.56	1 5/8	41.27
15/32	11.91	1/2	12.70	25/32	19.84	1 3/4	1 3/4	7/32	5.56	7/32	5.56	1 5/8	41.27
15/32	11.91	1/2	12.70	13/16	20.64	1 3/4	1 3/4	7/32	5.56	7/32	5.56	1 5/8	41.27
15/32	11.91	1/2	12.70	27/32	21.43	1 3/4	1 3/4	7/32	5.56	7/32	5.56	1 5/8	41.27
15/32	11.91	1/2	12.70	7/8	22.22	1 3/4	1 3/4	7/32	5.56	7/32	5.56	1 5/8	41.27
15/32	11.91	1/2	12.70	29/32	23.02	1 3/4	1 3/4	7/32	5.56	7/32	5.56	1 5/8	41.27
15/32	11.91	1/2	12.70	15/16	23.81	1 3/4	1 3/4	7/32	5.56	7/32	5.56	1 5/8	41.27
15/32	11.91	1/2	12.70	31/32	24.61	1 3/4	1 3/4	7/32	5.56	7/32	5.56	1 5/8	41.27
15/32	11.91	1/2	12.70	1	25.40	1 3/4	1 3/4	7/32	5.56	7/32	5.56	1 5/8	41.27
15/32	11.91	1/2	12.70	1 1/8	28.57	1 3/4	1 3/4	7/32	5.56	7/32	5.56	1 5/8	41.27
15/32	11.91	1/2	12.70	1 1/4	31.75	1 3/4	1 3/4	7/32	5.56	7/32	5.56	1 5/8	41.27
15/32	11.91	1/2	12.70	1 3/8	34.92	1 3/4	1 3/4	7/32	5.56	7/32	5.56	1 5/8	41.27
15/32	11.91	1/2	12.70	1 1/2	38.10	1 3/4	1 3/4	7/32	5.56	7/32	5.56	1 5/8	41.27
1/2	12.70	1/2	12.70	21/32	16.67	1 3/4	1 3/4	7/32	5.56	7/32	5.56	1 5/8	41.27
1/2	12.70	1/2	12.70	11/16	17.46	1 3/4	1 3/4	7/32	5.56	7/32	5.56	1 5/8	41.27
1/2	12.70	1/2	12.70	23/32	18.26	1 3/4	1 3/4	7/32	5.56	7/32	5.56	1 5/8	41.27
1/2	12.70	1/2	12.70	3/4	19.05	1 3/4	1 3/4	7/32	5.56	7/32	5.56	1 5/8	41.27
1/2	12.70	1/2	12.70	25/32	19.84	1 3/4	1 3/4	7/32	5.56	7/32	5.56	1 5/8	41.27
1/2	12.70	1/2	12.70	13/16	20.64	1 3/4	1 3/4	7/32	5.56	7/32	5.56	1 5/8	41.27

www.globaltungsten.com

B		E		D		M	A	L		T		C	
inch	mm	inch	mm	inch	mm	inch	inch	inch	mm	inch	mm	inch	mm
1/2	12.70	1/2	12.70	27/32	21.43	1 3/4	1 3/4	7/32	5.56	7/32	5.56	1 5/8	41.27
1/2	12.70	1/2	12.70	7/8	22.22	1 3/4	1 3/4	7/32	5.56	7/32	5.56	1 5/8	41.27
1/2	12.70	1/2	12.70	29/32	23.02	1 3/4	1 3/4	7/32	5.56	7/32	5.56	1 5/8	41.27
1/2	12.70	1/2	12.70	15/16	23.81	1 3/4	1 3/4	7/32	5.56	7/32	5.56	1 5/8	41.27
1/2	12.70	1/2	12.70	31/32	24.61	1 3/4	1 3/4	7/32	5.56	7/32	5.56	1 5/8	41.27
1/2	12.70	1/2	12.70	1	25.40	1 3/4	1 3/4	7/32	5.56	7/32	5.56	1 5/8	41.27
1/2	12.70	1/2	12.70	1 1/8	28.57	1 3/4	1 3/4	7/32	5.56	7/32	5.56	1 5/8	41.27
1/2	12.70	1/2	12.70	1 1/4	31.75	1 3/4	1 3/4	7/32	5.56	7/32	5.56	1 5/8	41.27
1/2	12.70	1/2	12.70	1 3/8	34.92	1 3/4	1 3/4	7/32	5.56	7/32	5.56	1 5/8	41.27
1/2	12.70	1/2	12.70	1 1/2	38.10	1 3/4	1 3/4	7/32	5.56	7/32	5.56	1 5/8	41.27
3/16	4.76	3/8	9.52	19/32	15.08	1 3/4	1 3/4	7/32	5.56	7/32	5.56	1 5/8	41.27
3/16	4.76	3/8	9.52	5/8	15.87	1 3/4	1 3/4	7/32	5.56	7/32	5.56	1 5/8	41.27
3/16	4.76	3/8	9.52	21/32	16.67	1 3/4	1 3/4	7/32	5.56	7/32	5.56	1 5/8	41.27
3/16	4.76	3/8	9.52	11/16	17.46	1 3/4	1 3/4	7/32	5.56	7/32	5.56	1 5/8	41.27
3/16	4.76	3/8	9.52	23/32	18.26	1 3/4	1 3/4	7/32	5.56	7/32	5.56	1 5/8	41.27
3/16	4.76	3/8	9.52	3/4	19.05	1 3/4	1 3/4	7/32	5.56	7/32	5.56	1 5/8	41.27
3/16	4.76	3/8	9.52	25/32	19.84	1 3/4	1 3/4	7/32	5.56	7/32	5.56	1 5/8	41.27
3/16	4.76	3/8	9.52	13/16	20.64	1 3/4	1 3/4	7/32	5.56	7/32	5.56	1 5/8	41.27
3/16	4.76	3/8	9.52	27/32	21.43	1 3/4	1 3/4	7/32	5.56	7/32	5.56	1 5/8	41.27
3/16	4.76	3/8	9.52	7/8	22.22	1 3/4	1 3/4	7/32	5.56	7/32	5.56	1 5/8	41.27
3/16	4.76	3/8	9.52	29/32	23.02	1 3/4	1 3/4	7/32	5.56	7/32	5.56	1 5/8	41.27
3/16	4.76	3/8	9.52	15/16	23.81	1 3/4	1 3/4	7/32	5.56	7/32	5.56	1 5/8	41.27
3/16	4.76	3/8	9.52	31/32	24.61	1 3/4	1 3/4	7/32	5.56	7/32	5.56	1 5/8	41.27
3/16	4.76	3/8	9.52	1	25.40	1 3/4	1 3/4	7/32	5.56	7/32	5.56	1 5/8	41.27
3/16	4.76	3/8	9.52	1 1/8	28.57	1 3/4	1 3/4	7/32	5.56	7/32	5.56	1 5/8	41.27
3/16	4.76	3/8	9.52	1 1/4	31.75	1 3/4	1 3/4	7/32	5.56	7/32	5.56	1 5/8	41.27
3/16	4.76	3/8	9.52	1 3/8	34.92	1 3/4	1 3/4	7/32	5.56	7/32	5.56	1 5/8	41.27
3/16	4.76	3/8	9.52	1 1/2	38.10	1 3/4	1 3/4	7/32	5.56	7/32	5.56	1 5/8	41.27
7/32	5.56	3/8	9.52	19/32	15.08	1 3/4	1 3/4	7/32	5.56	7/32	5.56	1 5/8	41.27
7/32	5.56	3/8	9.52	5/8	15.87	1 3/4	1 3/4	7/32	5.56	7/32	5.56	1 5/8	41.27
7/32	5.56	3/8	9.52	21/32	16.67	1 3/4	1 3/4	7/32	5.56	7/32	5.56	1 5/8	41.27
7/32	5.56	3/8	9.52	11/16	17.46	1 3/4	1 3/4	7/32	5.56	7/32	5.56	1 5/8	41.27
7/32	5.56	3/8	9.52	23/32	18.26	1 3/4	1 3/4	7/32	5.56	7/32	5.56	1 5/8	41.27
7/32	5.56	3/8	9.52	3/4	19.05	1 3/4	1 3/4	7/32	5.56	7/32	5.56	1 5/8	41.27
7/32	5.56	3/8	9.52	25/32	19.84	1 3/4	1 3/4	7/32	5.56	7/32	5.56	1 5/8	41.27
7/32	5.56	3/8	9.52	13/16	20.64	1 3/4	1 3/4	7/32	5.56	7/32	5.56	1 5/8	41.27
7/32	5.56	3/8	9.52	27/32	21.43	1 3/4	1 3/4	7/32	5.56	7/32	5.56	1 5/8	41.27
7/32	5.56	3/8	9.52	7/8	22.22	1 3/4	1 3/4	7/32	5.56	7/32	5.56	1 5/8	41.27
7/32	5.56	3/8	9.52	29/32	23.02	1 3/4	1 3/4	7/32	5.56	7/32	5.56	1 5/8	41.27
7/32	5.56	3/8	9.52	15/16	23.81	1 3/4	1 3/4	7/32	5.56	7/32	5.56	1 5/8	41.27
7/32	5.56	3/8	9.52	31/32	24.61	1 3/4	1 3/4	7/32	5.56	7/32	5.56	1 5/8	41.27
7/32	5.56	3/8	9.52	1	25.40	1 3/4	1 3/4	7/32	5.56	7/32	5.56	1 5/8	41.27
7/32	5.56	3/8	9.52	1 1/8	28.57	1 3/4	1 3/4	7/32	5.56	7/32	5.56	1 5/8	41.27
7/32	5.56	3/8	9.52	1 1/4	31.75	1 3/4	1 3/4	7/32	5.56	7/32	5.56	1 5/8	41.27
7/32	5.56	3/8	9.52	1 3/8	34.92	1 3/4	1 3/4	7/32	5.56	7/32	5.56	1 5/8	41.27

www.globaltungsten.com

B		E		D		M	A	L		T		C	
inch	mm	inch	mm	inch	mm	inch	inch	inch	mm	inch	mm	inch	mm
7/32	5.56	3/8	9.52	1 1/2	38.10	1 3/4	1 3/4	7/32	5.56	7/32	5.56	1 5/8	41.27
1/4	6.35	3/8	9.52	19/32	15.08	1 3/4	1 3/4	7/32	5.56	7/32	5.56	1 5/8	41.27
1/4	6.35	3/8	9.52	5/8	15.87	1 3/4	1 3/4	7/32	5.56	7/32	5.56	1 5/8	41.27
1/4	6.35	3/8	9.52	21/32	16.67	1 3/4	1 3/4	7/32	5.56	7/32	5.56	1 5/8	41.27
1/4	6.35	3/8	9.52	11/16	17.46	1 3/4	1 3/4	7/32	5.56	7/32	5.56	1 5/8	41.27
1/4	6.35	3/8	9.52	23/32	18.26	1 3/4	1 3/4	7/32	5.56	7/32	5.56	1 5/8	41.27
1/4	6.35	3/8	9.52	3/4	19.05	1 3/4	1 3/4	7/32	5.56	7/32	5.56	1 5/8	41.27
1/4	6.35	3/8	9.52	25/32	19.84	1 3/4	1 3/4	7/32	5.56	7/32	5.56	1 5/8	41.27
1/4	6.35	3/8	9.52	13/16	20.64	1 3/4	1 3/4	7/32	5.56	7/32	5.56	1 5/8	41.27
1/4	6.35	3/8	9.52	27/32	21.43	1 3/4	1 3/4	7/32	5.56	7/32	5.56	1 5/8	41.27
1/4	6.35	3/8	9.52	7/8	22.22	1 3/4	1 3/4	7/32	5.56	7/32	5.56	1 5/8	41.27
1/4	6.35	3/8	9.52	29/32	23.02	1 3/4	1 3/4	7/32	5.56	7/32	5.56	1 5/8	41.27
1/4	6.35	3/8	9.52	15/16	23.81	1 3/4	1 3/4	7/32	5.56	7/32	5.56	1 5/8	41.27
1/4	6.35	3/8	9.52	31/32	24.61	1 3/4	1 3/4	7/32	5.56	7/32	5.56	1 5/8	41.27
1/4	6.35	3/8	9.52	1	25.40	1 3/4	1 3/4	7/32	5.56	7/32	5.56	1 5/8	41.27
1/4	6.35	3/8	9.52	1 1/8	28.57	1 3/4	1 3/4	7/32	5.56	7/32	5.56	1 5/8	41.27
1/4	6.35	3/8	9.52	1 1/4	31.75	1 3/4	1 3/4	7/32	5.56	7/32	5.56	1 5/8	41.27
1/4	6.35	3/8	9.52	1 3/8	34.92	1 3/4	1 3/4	7/32	5.56	7/32	5.56	1 5/8	41.27
1/4	6.35	3/8	9.52	1 1/2	38.10	1 3/4	1 3/4	7/32	5.56	7/32	5.56	1 5/8	41.27
9/32	7.14	3/8	9.52	19/32	15.08	1 3/4	1 3/4	7/32	5.56	7/32	5.56	1 5/8	41.27
9/32	7.14	3/8	9.52	5/8	15.87	1 3/4	1 3/4	7/32	5.56	7/32	5.56	1 5/8	41.27
9/32	7.14	3/8	9.52	21/32	16.67	1 3/4	1 3/4	7/32	5.56	7/32	5.56	1 5/8	41.27
9/32	7.14	3/8	9.52	11/16	17.46	1 3/4	1 3/4	7/32	5.56	7/32	5.56	1 5/8	41.27
9/32	7.14	3/8	9.52	23/32	18.26	1 3/4	1 3/4	7/32	5.56	7/32	5.56	1 5/8	41.27
9/32	7.14	3/8	9.52	3/4	19.05	1 3/4	1 3/4	7/32	5.56	7/32	5.56	1 5/8	41.27
9/32	7.14	3/8	9.52	25/32	19.84	1 3/4	1 3/4	7/32	5.56	7/32	5.56	1 5/8	41.27
9/32	7.14	3/8	9.52	13/16	20.64	1 3/4	1 3/4	7/32	5.56	7/32	5.56	1 5/8	41.27
9/32	7.14	3/8	9.52	27/32	21.43	1 3/4	1 3/4	7/32	5.56	7/32	5.56	1 5/8	41.27
9/32	7.14	3/8	9.52	7/8	22.22	1 3/4	1 3/4	7/32	5.56	7/32	5.56	1 5/8	41.27
9/32	7.14	3/8	9.52	29/32	23.02	1 3/4	1 3/4	7/32	5.56	7/32	5.56	1 5/8	41.27
9/32	7.14	3/8	9.52	15/16	23.81	1 3/4	1 3/4	7/32	5.56	7/32	5.56	1 5/8	41.27
9/32	7.14	3/8	9.52	31/32	24.61	1 3/4	1 3/4	7/32	5.56	7/32	5.56	1 5/8	41.27
9/32	7.14	3/8	9.52	1	25.40	1 3/4	1 3/4	7/32	5.56	7/32	5.56	1 5/8	41.27
9/32	7.14	3/8	9.52	1 1/8	28.57	1 3/4	1 3/4	7/32	5.56	7/32	5.56	1 5/8	41.27
9/32	7.14	3/8	9.52	1 1/4	31.75	1 3/4	1 3/4	7/32	5.56	7/32	5.56	1 5/8	41.27
9/32	7.14	3/8	9.52	1 3/8	34.92	1 3/4	1 3/4	7/32	5.56	7/32	5.56	1 5/8	41.27
9/32	7.14	3/8	9.52	1 1/2	38.10	1 3/4	1 3/4	7/32	5.56	7/32	5.56	1 5/8	41.27
5/16	7.94	3/8	9.52	19/32	15.08	1 3/4	1 3/4	7/32	5.56	7/32	5.56	1 5/8	41.27
5/16	7.94	3/8	9.52	5/8	15.87	1 3/4	1 3/4	7/32	5.56	7/32	5.56	1 5/8	41.27
5/16	7.94	3/8	9.52	21/32	16.67	1 3/4	1 3/4	7/32	5.56	7/32	5.56	1 5/8	41.27
5/16	7.94	3/8	9.52	11/16	17.46	1 3/4	1 3/4	7/32	5.56	7/32	5.56	1 5/8	41.27
5/16	7.94	3/8	9.52	23/32	18.26	1 3/4	1 3/4	7/32	5.56	7/32	5.56	1 5/8	41.27
5/16	7.94	3/8	9.52	3/4	19.05	1 3/4	1 3/4	7/32	5.56	7/32	5.56	1 5/8	41.27
5/16	7.94	3/8	9.52	25/32	19.84	1 3/4	1 3/4	7/32	5.56	7/32	5.56	1 5/8	41.27
5/16	7.94	3/8	9.52	13/16	20.64	1 3/4	1 3/4	7/32	5.56	7/32	5.56	1 5/8	41.27

www.globaltungsters.com

B		E		D		M	A	L		T		C	
inch	mm	inch	mm	inch	mm	inch	inch	inch	mm	inch	mm	inch	mm
5/16	7.94	3/8	9.52	27/32	21.43	1 3/4	1 3/4	7/32	5.56	7/32	5.56	1 5/8	41.27
5/16	7.94	3/8	9.52	7/8	22.22	1 3/4	1 3/4	7/32	5.56	7/32	5.56	1 5/8	41.27
5/16	7.94	3/8	9.52	29/32	23.02	1 3/4	1 3/4	7/32	5.56	7/32	5.56	1 5/8	41.27
5/16	7.94	3/8	9.52	15/16	23.81	1 3/4	1 3/4	7/32	5.56	7/32	5.56	1 5/8	41.27
5/16	7.94	3/8	9.52	31/32	24.61	1 3/4	1 3/4	7/32	5.56	7/32	5.56	1 5/8	41.27
5/16	7.94	3/8	9.52	1	25.40	1 3/4	1 3/4	7/32	5.56	7/32	5.56	1 5/8	41.27
5/16	7.94	3/8	9.52	1 1/8	28.57	1 3/4	1 3/4	7/32	5.56	7/32	5.56	1 5/8	41.27
5/16	7.94	3/8	9.52	1 1/4	31.75	1 3/4	1 3/4	7/32	5.56	7/32	5.56	1 5/8	41.27
5/16	7.94	3/8	9.52	1 3/8	34.92	1 3/4	1 3/4	7/32	5.56	7/32	5.56	1 5/8	41.27
5/16	7.94	3/8	9.52	1 1/2	38.10	1 3/4	1 3/4	7/32	5.56	7/32	5.56	1 5/8	41.27
11/32	8.73	3/8	9.52	19/32	15.08	1 3/4	1 3/4	7/32	5.56	7/32	5.56	1 5/8	41.27
11/32	8.73	3/8	9.52	5/8	15.87	1 3/4	1 3/4	7/32	5.56	7/32	5.56	1 5/8	41.27
11/32	8.73	3/8	9.52	21/32	16.67	1 3/4	1 3/4	7/32	5.56	7/32	5.56	1 5/8	41.27
11/32	8.73	3/8	9.52	11/16	17.46	1 3/4	1 3/4	7/32	5.56	7/32	5.56	1 5/8	41.27
11/32	8.73	3/8	9.52	23/32	18.26	1 3/4	1 3/4	7/32	5.56	7/32	5.56	1 5/8	41.27
11/32	8.73	3/8	9.52	3/4	19.05	1 3/4	1 3/4	7/32	5.56	7/32	5.56	1 5/8	41.27
11/32	8.73	3/8	9.52	25/32	19.84	1 3/4	1 3/4	7/32	5.56	7/32	5.56	1 5/8	41.27
11/32	8.73	3/8	9.52	13/16	20.64	1 3/4	1 3/4	7/32	5.56	7/32	5.56	1 5/8	41.27
11/32	8.73	3/8	9.52	27/32	21.43	1 3/4	1 3/4	7/32	5.56	7/32	5.56	1 5/8	41.27
11/32	8.73	3/8	9.52	7/8	22.22	1 3/4	1 3/4	7/32	5.56	7/32	5.56	1 5/8	41.27
11/32	8.73	3/8	9.52	29/32	23.02	1 3/4	1 3/4	7/32	5.56	7/32	5.56	1 5/8	41.27
11/32	8.73	3/8	9.52	15/16	23.81	1 3/4	1 3/4	7/32	5.56	7/32	5.56	1 5/8	41.27
11/32	8.73	3/8	9.52	31/32	24.61	1 3/4	1 3/4	7/32	5.56	7/32	5.56	1 5/8	41.27
11/32	8.73	3/8	9.52	1	25.40	1 3/4	1 3/4	7/32	5.56	7/32	5.56	1 5/8	41.27
11/32	8.73	3/8	9.52	1 1/8	28.57	1 3/4	1 3/4	7/32	5.56	7/32	5.56	1 5/8	41.27
11/32	8.73	3/8	9.52	1 1/4	31.75	1 3/4	1 3/4	7/32	5.56	7/32	5.56	1 5/8	41.27
11/32	8.73	3/8	9.52	1 3/8	34.92	1 3/4	1 3/4	7/32	5.56	7/32	5.56	1 5/8	41.27
11/32	8.73	3/8	9.52	1 1/2	38.10	1 3/4	1 3/4	7/32	5.56	7/32	5.56	1 5/8	41.27
3/8	9.52	3/8	9.52	19/32	15.08	1 3/4	1 3/4	7/32	5.56	7/32	5.56	1 5/8	41.27
3/8	9.52	3/8	9.52	5/8	15.87	1 3/4	1 3/4	7/32	5.56	7/32	5.56	1 5/8	41.27
3/8	9.52	3/8	9.52	21/32	16.67	1 3/4	1 3/4	7/32	5.56	7/32	5.56	1 5/8	41.27
3/8	9.52	3/8	9.52	11/16	17.46	1 3/4	1 3/4	7/32	5.56	7/32	5.56	1 5/8	41.27
3/8	9.52	3/8	9.52	23/32	18.26	1 3/4	1 3/4	7/32	5.56	7/32	5.56	1 5/8	41.27
3/8	9.52	3/8	9.52	3/4	19.05	1 3/4	1 3/4	7/32	5.56	7/32	5.56	1 5/8	41.27
3/8	9.52	3/8	9.52	25/32	19.84	1 3/4	1 3/4	7/32	5.56	7/32	5.56	1 5/8	41.27
3/8	9.52	3/8	9.52	13/16	20.64	1 3/4	1 3/4	7/32	5.56	7/32	5.56	1 5/8	41.27
3/8	9.52	3/8	9.52	27/32	21.43	1 3/4	1 3/4	7/32	5.56	7/32	5.56	1 5/8	41.27
3/8	9.52	3/8	9.52	7/8	22.22	1 3/4	1 3/4	7/32	5.56	7/32	5.56	1 5/8	41.27
3/8	9.52	3/8	9.52	29/32	23.02	1 3/4	1 3/4	7/32	5.56	7/32	5.56	1 5/8	41.27
3/8	9.52	3/8	9.52	15/16	23.81	1 3/4	1 3/4	7/32	5.56	7/32	5.56	1 5/8	41.27
3/8	9.52	3/8	9.52	31/32	24.61	1 3/4	1 3/4	7/32	5.56	7/32	5.56	1 5/8	41.27
3/8	9.52	3/8	9.52	1	25.40	1 3/4	1 3/4	7/32	5.56	7/32	5.56	1 5/8	41.27
3/8	9.52	3/8	9.52	1 1/8	28.57	1 3/4	1 3/4	7/32	5.56	7/32	5.56	1 5/8	41.27
3/8	9.52	3/8	9.52	1 1/4	31.75	1 3/4	1 3/4	7/32	5.56	7/32	5.56	1 5/8	41.27
3/8	9.52	3/8	9.52	1 3/8	34.92	1 3/4	1 3/4	7/32	5.56	7/32	5.56	1 5/8	41.27

www.globaltungsten.com

B		E		D		M	A	L		T		C	
inch	mm	inch	mm	inch	mm	inch	inch	inch	mm	inch	mm	inch	mm
3/8	9.52	3/8	9.52	1 1/2	38.10	1 3/4	1 3/4	7/32	5.56	7/32	5.56	1 5/8	41.27
3/16	4.76	1 1/8	28.57	1 3/8	34.92	1 5/8	1 5/8	7/32	5.56	7/32	5.56	1 5/8	41.27
7/32	5.56	1 1/8	28.57	1 3/8	34.92	1 5/8	1 5/8	7/32	5.56	7/32	5.56	1 5/8	41.27
1/4	6.35	1 1/8	28.57	1 3/8	34.92	1 5/8	1 5/8	7/32	5.56	7/32	5.56	1 5/8	41.27
9/32	7.14	1 1/8	28.57	1 3/8	34.92	1 5/8	1 5/8	7/32	5.56	7/32	5.56	1 5/8	41.27
5/16	7.94	1 1/8	28.57	1 3/8	34.92	1 5/8	1 5/8	7/32	5.56	7/32	5.56	1 5/8	41.27
11/32	8.73	1 1/8	28.57	1 3/8	34.92	1 5/8	1 5/8	7/32	5.56	7/32	5.56	1 5/8	41.27
3/8	9.52	1 1/8	28.57	1 3/8	34.92	1 5/8	1 5/8	7/32	5.56	7/32	5.56	1 5/8	41.27
13/32	10.32	1 1/8	28.57	1 3/8	34.92	1 5/8	1 5/8	7/32	5.56	7/32	5.56	1 5/8	41.27
7/16	11.11	1 1/8	28.57	1 3/8	34.92	1 5/8	1 5/8	7/32	5.56	7/32	5.56	1 5/8	41.27
15/32	11.91	1 1/8	28.57	1 3/8	34.92	1 5/8	1 5/8	7/32	5.56	7/32	5.56	1 5/8	41.27
1/2	12.70	1 1/8	28.57	1 3/8	34.92	1 5/8	1 5/8	7/32	5.56	7/32	5.56	1 5/8	41.27
17/32	13.49	1 1/8	28.57	1 3/8	34.92	1 5/8	1 5/8	7/32	5.56	7/32	5.56	1 5/8	41.27
9/16	14.29	1 1/8	28.57	1 3/8	34.92	1 5/8	1 5/8	7/32	5.56	7/32	5.56	1 5/8	41.27
19/32	15.08	1 1/8	28.57	1 3/8	34.92	1 5/8	1 5/8	7/32	5.56	7/32	5.56	1 5/8	41.27
5/8	15.87	1 1/8	28.57	1 3/8	34.92	1 5/8	1 5/8	7/32	5.56	7/32	5.56	1 5/8	41.27
21/32	16.67	1 1/8	28.57	1 3/8	34.92	1 5/8	1 5/8	7/32	5.56	7/32	5.56	1 5/8	41.27
11/16	17.46	1 1/8	28.57	1 3/8	34.92	1 5/8	1 5/8	7/32	5.56	7/32	5.56	1 5/8	41.27
23/32	18.26	1 1/8	28.57	1 3/8	34.92	1 5/8	1 5/8	7/32	5.56	7/32	5.56	1 5/8	41.27
3/4	19.05	1 1/8	28.57	1 3/8	34.92	1 5/8	1 5/8	7/32	5.56	7/32	5.56	1 5/8	41.27
25/32	19.84	1 1/8	28.57	1 3/8	34.92	1 5/8	1 5/8	7/32	5.56	7/32	5.56	1 5/8	41.27
13/16	20.64	1 1/8	28.57	1 3/8	34.92	1 5/8	1 5/8	7/32	5.56	7/32	5.56	1 5/8	41.27
27/32	21.43	1 1/8	28.57	1 3/8	34.92	1 5/8	1 5/8	7/32	5.56	7/32	5.56	1 5/8	41.27
7/8	22.22	1 1/8	28.57	1 3/8	34.92	1 5/8	1 5/8	7/32	5.56	7/32	5.56	1 5/8	41.27
29/32	23.02	1 1/8	28.57	1 3/8	34.92	1 5/8	1 5/8	7/32	5.56	7/32	5.56	1 5/8	41.27
15/16	23.81	1 1/8	28.57	1 3/8	34.92	1 5/8	1 5/8	7/32	5.56	7/32	5.56	1 5/8	41.27
31/32	24.61	1 1/8	28.57	1 3/8	34.92	1 5/8	1 5/8	7/32	5.56	7/32	5.56	1 5/8	41.27
1	25.40	1 1/8	28.57	1 3/8	34.92	1 5/8	1 5/8	7/32	5.56	7/32	5.56	1 5/8	41.27
3/16	4.76	1	25.40	1 1/4	31.75	1 5/8	1 5/8	7/32	5.56	7/32	5.56	1 5/8	41.27
7/32	5.56	1	25.40	1 1/4	31.75	1 5/8	1 5/8	7/32	5.56	7/32	5.56	1 5/8	41.27
1/4	6.35	1	25.40	1 1/4	31.75	1 5/8	1 5/8	7/32	5.56	7/32	5.56	1 5/8	41.27
9/32	7.14	1	25.40	1 1/4	31.75	1 5/8	1 5/8	7/32	5.56	7/32	5.56	1 5/8	41.27
5/16	7.94	1	25.40	1 1/4	31.75	1 5/8	1 5/8	7/32	5.56	7/32	5.56	1 5/8	41.27
11/32	8.73	1	25.40	1 1/4	31.75	1 5/8	1 5/8	7/32	5.56	7/32	5.56	1 5/8	41.27
3/8	9.52	1	25.40	1 1/4	31.75	1 5/8	1 5/8	7/32	5.56	7/32	5.56	1 5/8	41.27
13/32	10.32	1	25.40	1 1/4	31.75	1 5/8	1 5/8	7/32	5.56	7/32	5.56	1 5/8	41.27
7/16	11.11	1	25.40	1 1/4	31.75	1 5/8	1 5/8	7/32	5.56	7/32	5.56	1 5/8	41.27
15/32	11.91	1	25.40	1 1/4	31.75	1 5/8	1 5/8	7/32	5.56	7/32	5.56	1 5/8	41.27
1/2	12.70	1	25.40	1 1/4	31.75	1 5/8	1 5/8	7/32	5.56	7/32	5.56	1 5/8	41.27
17/32	13.49	1	25.40	1 1/4	31.75	1 5/8	1 5/8	7/32	5.56	7/32	5.56	1 5/8	41.27
9/16	14.29	1	25.40	1 1/4	31.75	1 5/8	1 5/8	7/32	5.56	7/32	5.56	1 5/8	41.27
19/32	15.08	1	25.40	1 1/4	31.75	1 5/8	1 5/8	7/32	5.56	7/32	5.56	1 5/8	41.27
5/8	15.87	1	25.40	1 1/4	31.75	1 5/8	1 5/8	7/32	5.56	7/32	5.56	1 5/8	41.27
21/32	16.67	1	25.40	1 1/4	31.75	1 5/8	1 5/8	7/32	5.56	7/32	5.56	1 5/8	41.27
11/16	17.46	1	25.40	1 1/4	31.75	1 5/8	1 5/8	7/32	5.56	7/32	5.56	1 5/8	41.27

www.globaltungsteers.com

B		E		D		M	A	L		T		C	
inch	mm	inch	mm	inch	mm	inch	inch	inch	mm	inch	mm	inch	mm
23/32	18.26	1	25.40	1 1/4	31.75	1 5/8	1 5/8	7/32	5.56	7/32	5.56	1 5/8	41.27
3/4	19.05	1	25.40	1 1/4	31.75	1 5/8	1 5/8	7/32	5.56	7/32	5.56	1 5/8	41.27
25/32	19.84	1	25.40	1 1/4	31.75	1 5/8	1 5/8	7/32	5.56	7/32	5.56	1 5/8	41.27
13/16	20.64	1	25.40	1 1/4	31.75	1 5/8	1 5/8	7/32	5.56	7/32	5.56	1 5/8	41.27
27/32	21.43	1	25.40	1 1/4	31.75	1 5/8	1 5/8	7/32	5.56	7/32	5.56	1 5/8	41.27
7/8	22.22	1	25.40	1 1/4	31.75	1 5/8	1 5/8	7/32	5.56	7/32	5.56	1 5/8	41.27
29/32	23.02	1	25.40	1 1/4	31.75	1 5/8	1 5/8	7/32	5.56	7/32	5.56	1 5/8	41.27
15/16	23.81	1	25.40	1 1/4	31.75	1 5/8	1 5/8	7/32	5.56	7/32	5.56	1 5/8	41.27
31/32	24.61	1	25.40	1 1/4	31.75	1 5/8	1 5/8	7/32	5.56	7/32	5.56	1 5/8	41.27
1	25.40	1	25.40	1 1/4	31.75	1 5/8	1 5/8	7/32	5.56	7/32	5.56	1 5/8	41.27
3/16	4.76	1	25.40	1 3/8	34.92	1 5/8	1 5/8	7/32	5.56	7/32	5.56	1 5/8	41.27
7/32	5.56	1	25.40	1 3/8	34.92	1 5/8	1 5/8	7/32	5.56	7/32	5.56	1 5/8	41.27
1/4	6.35	1	25.40	1 3/8	34.92	1 5/8	1 5/8	7/32	5.56	7/32	5.56	1 5/8	41.27
9/32	7.14	1	25.40	1 3/8	34.92	1 5/8	1 5/8	7/32	5.56	7/32	5.56	1 5/8	41.27
5/16	7.94	1	25.40	1 3/8	34.92	1 5/8	1 5/8	7/32	5.56	7/32	5.56	1 5/8	41.27
11/32	8.73	1	25.40	1 3/8	34.92	1 5/8	1 5/8	7/32	5.56	7/32	5.56	1 5/8	41.27
3/8	9.52	1	25.40	1 3/8	34.92	1 5/8	1 5/8	7/32	5.56	7/32	5.56	1 5/8	41.27
13/32	10.32	1	25.40	1 3/8	34.92	1 5/8	1 5/8	7/32	5.56	7/32	5.56	1 5/8	41.27
7/16	11.11	1	25.40	1 3/8	34.92	1 5/8	1 5/8	7/32	5.56	7/32	5.56	1 5/8	41.27
15/32	11.91	1	25.40	1 3/8	34.92	1 5/8	1 5/8	7/32	5.56	7/32	5.56	1 5/8	41.27
1/2	12.70	1	25.40	1 3/8	34.92	1 5/8	1 5/8	7/32	5.56	7/32	5.56	1 5/8	41.27
17/32	13.49	1	25.40	1 3/8	34.92	1 5/8	1 5/8	7/32	5.56	7/32	5.56	1 5/8	41.27
9/16	14.29	1	25.40	1 3/8	34.92	1 5/8	1 5/8	7/32	5.56	7/32	5.56	1 5/8	41.27
19/32	15.08	1	25.40	1 3/8	34.92	1 5/8	1 5/8	7/32	5.56	7/32	5.56	1 5/8	41.27
5/8	15.87	1	25.40	1 3/8	34.92	1 5/8	1 5/8	7/32	5.56	7/32	5.56	1 5/8	41.27
21/32	16.67	1	25.40	1 3/8	34.92	1 5/8	1 5/8	7/32	5.56	7/32	5.56	1 5/8	41.27
11/16	17.46	1	25.40	1 3/8	34.92	1 5/8	1 5/8	7/32	5.56	7/32	5.56	1 5/8	41.27
23/32	18.26	1	25.40	1 3/8	34.92	1 5/8	1 5/8	7/32	5.56	7/32	5.56	1 5/8	41.27
3/4	19.05	1	25.40	1 3/8	34.92	1 5/8	1 5/8	7/32	5.56	7/32	5.56	1 5/8	41.27
25/32	19.84	1	25.40	1 3/8	34.92	1 5/8	1 5/8	7/32	5.56	7/32	5.56	1 5/8	41.27
13/16	20.64	1	25.40	1 3/8	34.92	1 5/8	1 5/8	7/32	5.56	7/32	5.56	1 5/8	41.27
27/32	21.43	1	25.40	1 3/8	34.92	1 5/8	1 5/8	7/32	5.56	7/32	5.56	1 5/8	41.27
7/8	22.22	1	25.40	1 3/8	34.92	1 5/8	1 5/8	7/32	5.56	7/32	5.56	1 5/8	41.27
29/32	23.02	1	25.40	1 3/8	34.92	1 5/8	1 5/8	7/32	5.56	7/32	5.56	1 5/8	41.27
15/16	23.81	1	25.40	1 3/8	34.92	1 5/8	1 5/8	7/32	5.56	7/32	5.56	1 5/8	41.27
31/32	24.61	1	25.40	1 3/8	34.92	1 5/8	1 5/8	7/32	5.56	7/32	5.56	1 5/8	41.27
1	25.40	1	25.40	1 3/8	34.92	1 5/8	1 5/8	7/32	5.56	7/32	5.56	1 5/8	41.27
3/16	4.76	7/8	22.22	1 1/8	28.57	1 5/8	1 5/8	7/32	5.56	7/32	5.56	1 5/8	41.27
7/32	5.56	7/8	22.22	1 1/8	28.57	1 5/8	1 5/8	7/32	5.56	7/32	5.56	1 5/8	41.27
1/4	6.35	7/8	22.22	1 1/8	28.57	1 5/8	1 5/8	7/32	5.56	7/32	5.56	1 5/8	41.27
9/32	7.14	7/8	22.22	1 1/8	28.57	1 5/8	1 5/8	7/32	5.56	7/32	5.56	1 5/8	41.27
5/16	7.94	7/8	22.22	1 1/8	28.57	1 5/8	1 5/8	7/32	5.56	7/32	5.56	1 5/8	41.27
11/32	8.73	7/8	22.22	1 1/8	28.57	1 5/8	1 5/8	7/32	5.56	7/32	5.56	1 5/8	41.27
3/8	9.52	7/8	22.22	1 1/8	28.57	1 5/8	1 5/8	7/32	5.56	7/32	5.56	1 5/8	41.27
13/32	10.32	7/8	22.22	1 1/8	28.57	1 5/8	1 5/8	7/32	5.56	7/32	5.56	1 5/8	41.27

www.globaltungsteels.com

B		E		D		M	A	L		T		C	
inch	mm	inch	mm	inch	mm	inch	inch	inch	mm	inch	mm	inch	mm
7/16	11.11	7/8	22.22	1 1/8	28.57	1 5/8	1 5/8	7/32	5.56	7/32	5.56	1 5/8	41.27
15/32	11.91	7/8	22.22	1 1/8	28.57	1 5/8	1 5/8	7/32	5.56	7/32	5.56	1 5/8	41.27
1/2	12.70	7/8	22.22	1 1/8	28.57	1 5/8	1 5/8	7/32	5.56	7/32	5.56	1 5/8	41.27
17/32	13.49	7/8	22.22	1 1/8	28.57	1 5/8	1 5/8	7/32	5.56	7/32	5.56	1 5/8	41.27
9/16	14.29	7/8	22.22	1 1/8	28.57	1 5/8	1 5/8	7/32	5.56	7/32	5.56	1 5/8	41.27
19/32	15.08	7/8	22.22	1 1/8	28.57	1 5/8	1 5/8	7/32	5.56	7/32	5.56	1 5/8	41.27
5/8	15.87	7/8	22.22	1 1/8	28.57	1 5/8	1 5/8	7/32	5.56	7/32	5.56	1 5/8	41.27
21/32	16.67	7/8	22.22	1 1/8	28.57	1 5/8	1 5/8	7/32	5.56	7/32	5.56	1 5/8	41.27
11/16	17.46	7/8	22.22	1 1/8	28.57	1 5/8	1 5/8	7/32	5.56	7/32	5.56	1 5/8	41.27
23/32	18.26	7/8	22.22	1 1/8	28.57	1 5/8	1 5/8	7/32	5.56	7/32	5.56	1 5/8	41.27
3/4	19.05	7/8	22.22	1 1/8	28.57	1 5/8	1 5/8	7/32	5.56	7/32	5.56	1 5/8	41.27
25/32	19.84	7/8	22.22	1 1/8	28.57	1 5/8	1 5/8	7/32	5.56	7/32	5.56	1 5/8	41.27
13/16	20.64	7/8	22.22	1 1/8	28.57	1 5/8	1 5/8	7/32	5.56	7/32	5.56	1 5/8	41.27
27/32	21.43	7/8	22.22	1 1/8	28.57	1 5/8	1 5/8	7/32	5.56	7/32	5.56	1 5/8	41.27
7/8	22.22	7/8	22.22	1 1/8	28.57	1 5/8	1 5/8	7/32	5.56	7/32	5.56	1 5/8	41.27
3/16	4.76	7/8	22.22	1 1/4	31.75	1 5/8	1 5/8	7/32	5.56	7/32	5.56	1 5/8	41.27
7/32	5.56	7/8	22.22	1 1/4	31.75	1 5/8	1 5/8	7/32	5.56	7/32	5.56	1 5/8	41.27
1/4	6.35	7/8	22.22	1 1/4	31.75	1 5/8	1 5/8	7/32	5.56	7/32	5.56	1 5/8	41.27
9/32	7.14	7/8	22.22	1 1/4	31.75	1 5/8	1 5/8	7/32	5.56	7/32	5.56	1 5/8	41.27
5/16	7.94	7/8	22.22	1 1/4	31.75	1 5/8	1 5/8	7/32	5.56	7/32	5.56	1 5/8	41.27
11/32	8.73	7/8	22.22	1 1/4	31.75	1 5/8	1 5/8	7/32	5.56	7/32	5.56	1 5/8	41.27
3/8	9.52	7/8	22.22	1 1/4	31.75	1 5/8	1 5/8	7/32	5.56	7/32	5.56	1 5/8	41.27
13/32	10.32	7/8	22.22	1 1/4	31.75	1 5/8	1 5/8	7/32	5.56	7/32	5.56	1 5/8	41.27
7/16	11.11	7/8	22.22	1 1/4	31.75	1 5/8	1 5/8	7/32	5.56	7/32	5.56	1 5/8	41.27
15/32	11.91	7/8	22.22	1 1/4	31.75	1 5/8	1 5/8	7/32	5.56	7/32	5.56	1 5/8	41.27
1/2	12.70	7/8	22.22	1 1/4	31.75	1 5/8	1 5/8	7/32	5.56	7/32	5.56	1 5/8	41.27
17/32	13.49	7/8	22.22	1 1/4	31.75	1 5/8	1 5/8	7/32	5.56	7/32	5.56	1 5/8	41.27
9/16	14.29	7/8	22.22	1 1/4	31.75	1 5/8	1 5/8	7/32	5.56	7/32	5.56	1 5/8	41.27
19/32	15.08	7/8	22.22	1 1/4	31.75	1 5/8	1 5/8	7/32	5.56	7/32	5.56	1 5/8	41.27
5/8	15.87	7/8	22.22	1 1/4	31.75	1 5/8	1 5/8	7/32	5.56	7/32	5.56	1 5/8	41.27
21/32	16.67	7/8	22.22	1 1/4	31.75	1 5/8	1 5/8	7/32	5.56	7/32	5.56	1 5/8	41.27
11/16	17.46	7/8	22.22	1 1/4	31.75	1 5/8	1 5/8	7/32	5.56	7/32	5.56	1 5/8	41.27
23/32	18.26	7/8	22.22	1 1/4	31.75	1 5/8	1 5/8	7/32	5.56	7/32	5.56	1 5/8	41.27
3/4	19.05	7/8	22.22	1 1/4	31.75	1 5/8	1 5/8	7/32	5.56	7/32	5.56	1 5/8	41.27
25/32	19.84	7/8	22.22	1 1/4	31.75	1 5/8	1 5/8	7/32	5.56	7/32	5.56	1 5/8	41.27
13/16	20.64	7/8	22.22	1 1/4	31.75	1 5/8	1 5/8	7/32	5.56	7/32	5.56	1 5/8	41.27
27/32	21.43	7/8	22.22	1 1/4	31.75	1 5/8	1 5/8	7/32	5.56	7/32	5.56	1 5/8	41.27
7/8	22.22	7/8	22.22	1 1/4	31.75	1 5/8	1 5/8	7/32	5.56	7/32	5.56	1 5/8	41.27
3/16	4.76	7/8	22.22	1 3/8	34.92	1 5/8	1 5/8	7/32	5.56	7/32	5.56	1 5/8	41.27
7/32	5.56	7/8	22.22	1 3/8	34.92	1 5/8	1 5/8	7/32	5.56	7/32	5.56	1 5/8	41.27
1/4	6.35	7/8	22.22	1 3/8	34.92	1 5/8	1 5/8	7/32	5.56	7/32	5.56	1 5/8	41.27
9/32	7.14	7/8	22.22	1 3/8	34.92	1 5/8	1 5/8	7/32	5.56	7/32	5.56	1 5/8	41.27
5/16	7.94	7/8	22.22	1 3/8	34.92	1 5/8	1 5/8	7/32	5.56	7/32	5.56	1 5/8	41.27
11/32	8.73	7/8	22.22	1 3/8	34.92	1 5/8	1 5/8	7/32	5.56	7/32	5.56	1 5/8	41.27
3/8	9.52	7/8	22.22	1 3/8	34.92	1 5/8	1 5/8	7/32	5.56	7/32	5.56	1 5/8	41.27

www.globaltungsten.com

B		E		D		M	A	L		T		C	
inch	mm	inch	mm	inch	mm	inch	inch	inch	mm	inch	mm	inch	mm
13/32	10.32	7/8	22.22	1 3/8	34.92	1 5/8	1 5/8	7/32	5.56	7/32	5.56	1 5/8	41.27
7/16	11.11	7/8	22.22	1 3/8	34.92	1 5/8	1 5/8	7/32	5.56	7/32	5.56	1 5/8	41.27
15/32	11.91	7/8	22.22	1 3/8	34.92	1 5/8	1 5/8	7/32	5.56	7/32	5.56	1 5/8	41.27
1/2	12.70	7/8	22.22	1 3/8	34.92	1 5/8	1 5/8	7/32	5.56	7/32	5.56	1 5/8	41.27
17/32	13.49	7/8	22.22	1 3/8	34.92	1 5/8	1 5/8	7/32	5.56	7/32	5.56	1 5/8	41.27
9/16	14.29	7/8	22.22	1 3/8	34.92	1 5/8	1 5/8	7/32	5.56	7/32	5.56	1 5/8	41.27
19/32	15.08	7/8	22.22	1 3/8	34.92	1 5/8	1 5/8	7/32	5.56	7/32	5.56	1 5/8	41.27
5/8	15.87	7/8	22.22	1 3/8	34.92	1 5/8	1 5/8	7/32	5.56	7/32	5.56	1 5/8	41.27
21/32	16.67	7/8	22.22	1 3/8	34.92	1 5/8	1 5/8	7/32	5.56	7/32	5.56	1 5/8	41.27
11/16	17.46	7/8	22.22	1 3/8	34.92	1 5/8	1 5/8	7/32	5.56	7/32	5.56	1 5/8	41.27
23/32	18.26	7/8	22.22	1 3/8	34.92	1 5/8	1 5/8	7/32	5.56	7/32	5.56	1 5/8	41.27
3/4	19.05	7/8	22.22	1 3/8	34.92	1 5/8	1 5/8	7/32	5.56	7/32	5.56	1 5/8	41.27
25/32	19.84	7/8	22.22	1 3/8	34.92	1 5/8	1 5/8	7/32	5.56	7/32	5.56	1 5/8	41.27
13/16	20.64	7/8	22.22	1 3/8	34.92	1 5/8	1 5/8	7/32	5.56	7/32	5.56	1 5/8	41.27
27/32	21.43	7/8	22.22	1 3/8	34.92	1 5/8	1 5/8	7/32	5.56	7/32	5.56	1 5/8	41.27
7/8	22.22	7/8	22.22	1 3/8	34.92	1 5/8	1 5/8	7/32	5.56	7/32	5.56	1 5/8	41.27
3/16	4.76	3/4	19.05	29/32	23.02	1 5/8	1 5/8	7/32	5.56	7/32	5.56	1 5/8	41.27
7/32	5.56	3/4	19.05	29/32	23.02	1 5/8	1 5/8	7/32	5.56	7/32	5.56	1 5/8	41.27
1/4	6.35	3/4	19.05	29/32	23.02	1 5/8	1 5/8	7/32	5.56	7/32	5.56	1 5/8	41.27
9/32	7.14	3/4	19.05	29/32	23.02	1 5/8	1 5/8	7/32	5.56	7/32	5.56	1 5/8	41.27
5/16	7.94	3/4	19.05	29/32	23.02	1 5/8	1 5/8	7/32	5.56	7/32	5.56	1 5/8	41.27
11/32	8.73	3/4	19.05	29/32	23.02	1 5/8	1 5/8	7/32	5.56	7/32	5.56	1 5/8	41.27
3/8	9.52	3/4	19.05	29/32	23.02	1 5/8	1 5/8	7/32	5.56	7/32	5.56	1 5/8	41.27
13/32	10.32	3/4	19.05	29/32	23.02	1 5/8	1 5/8	7/32	5.56	7/32	5.56	1 5/8	41.27
7/16	11.11	3/4	19.05	29/32	23.02	1 5/8	1 5/8	7/32	5.56	7/32	5.56	1 5/8	41.27
15/32	11.91	3/4	19.05	29/32	23.02	1 5/8	1 5/8	7/32	5.56	7/32	5.56	1 5/8	41.27
1/2	12.70	3/4	19.05	29/32	23.02	1 5/8	1 5/8	7/32	5.56	7/32	5.56	1 5/8	41.27
17/32	13.49	3/4	19.05	29/32	23.02	1 5/8	1 5/8	7/32	5.56	7/32	5.56	1 5/8	41.27
9/16	14.29	3/4	19.05	29/32	23.02	1 5/8	1 5/8	7/32	5.56	7/32	5.56	1 5/8	41.27
19/32	15.08	3/4	19.05	29/32	23.02	1 5/8	1 5/8	7/32	5.56	7/32	5.56	1 5/8	41.27
5/8	15.87	3/4	19.05	29/32	23.02	1 5/8	1 5/8	7/32	5.56	7/32	5.56	1 5/8	41.27
21/32	16.67	3/4	19.05	29/32	23.02	1 5/8	1 5/8	7/32	5.56	7/32	5.56	1 5/8	41.27
11/16	17.46	3/4	19.05	29/32	23.02	1 5/8	1 5/8	7/32	5.56	7/32	5.56	1 5/8	41.27
23/32	18.26	3/4	19.05	29/32	23.02	1 5/8	1 5/8	7/32	5.56	7/32	5.56	1 5/8	41.27
3/4	19.05	3/4	19.05	29/32	23.02	1 5/8	1 5/8	7/32	5.56	7/32	5.56	1 5/8	41.27
3/16	4.76	3/4	19.05	15/16	23.81	1 5/8	1 5/8	7/32	5.56	7/32	5.56	1 5/8	41.27
7/32	5.56	3/4	19.05	15/16	23.81	1 5/8	1 5/8	7/32	5.56	7/32	5.56	1 5/8	41.27
1/4	6.35	3/4	19.05	15/16	23.81	1 5/8	1 5/8	7/32	5.56	7/32	5.56	1 5/8	41.27
9/32	7.14	3/4	19.05	15/16	23.81	1 5/8	1 5/8	7/32	5.56	7/32	5.56	1 5/8	41.27
5/16	7.94	3/4	19.05	15/16	23.81	1 5/8	1 5/8	7/32	5.56	7/32	5.56	1 5/8	41.27
11/32	8.73	3/4	19.05	15/16	23.81	1 5/8	1 5/8	7/32	5.56	7/32	5.56	1 5/8	41.27
3/8	9.52	3/4	19.05	15/16	23.81	1 5/8	1 5/8	7/32	5.56	7/32	5.56	1 5/8	41.27
13/32	10.32	3/4	19.05	15/16	23.81	1 5/8	1 5/8	7/32	5.56	7/32	5.56	1 5/8	41.27
7/16	11.11	3/4	19.05	15/16	23.81	1 5/8	1 5/8	7/32	5.56	7/32	5.56	1 5/8	41.27
15/32	11.91	3/4	19.05	15/16	23.81	1 5/8	1 5/8	7/32	5.56	7/32	5.56	1 5/8	41.27

www.globaltungsten.com

B		E		D		M	A	L		T		C	
inch	mm	inch	mm	inch	mm	inch	inch	inch	mm	inch	mm	inch	mm
1/2	12.70	3/4	19.05	15/16	23.81	1 5/8	1 5/8	7/32	5.56	7/32	5.56	1 5/8	41.27
17/32	13.49	3/4	19.05	15/16	23.81	1 5/8	1 5/8	7/32	5.56	7/32	5.56	1 5/8	41.27
9/16	14.29	3/4	19.05	15/16	23.81	1 5/8	1 5/8	7/32	5.56	7/32	5.56	1 5/8	41.27
19/32	15.08	3/4	19.05	15/16	23.81	1 5/8	1 5/8	7/32	5.56	7/32	5.56	1 5/8	41.27
5/8	15.87	3/4	19.05	15/16	23.81	1 5/8	1 5/8	7/32	5.56	7/32	5.56	1 5/8	41.27
21/32	16.67	3/4	19.05	15/16	23.81	1 5/8	1 5/8	7/32	5.56	7/32	5.56	1 5/8	41.27
11/16	17.46	3/4	19.05	15/16	23.81	1 5/8	1 5/8	7/32	5.56	7/32	5.56	1 5/8	41.27
23/32	18.26	3/4	19.05	15/16	23.81	1 5/8	1 5/8	7/32	5.56	7/32	5.56	1 5/8	41.27
3/4	19.05	3/4	19.05	15/16	23.81	1 5/8	1 5/8	7/32	5.56	7/32	5.56	1 5/8	41.27
3/16	4.76	3/4	19.05	31/32	24.61	1 5/8	1 5/8	7/32	5.56	7/32	5.56	1 5/8	41.27
7/32	5.56	3/4	19.05	31/32	24.61	1 5/8	1 5/8	7/32	5.56	7/32	5.56	1 5/8	41.27
1/4	6.35	3/4	19.05	31/32	24.61	1 5/8	1 5/8	7/32	5.56	7/32	5.56	1 5/8	41.27
9/32	7.14	3/4	19.05	31/32	24.61	1 5/8	1 5/8	7/32	5.56	7/32	5.56	1 5/8	41.27
5/16	7.94	3/4	19.05	31/32	24.61	1 5/8	1 5/8	7/32	5.56	7/32	5.56	1 5/8	41.27
11/32	8.73	3/4	19.05	31/32	24.61	1 5/8	1 5/8	7/32	5.56	7/32	5.56	1 5/8	41.27
3/8	9.52	3/4	19.05	31/32	24.61	1 5/8	1 5/8	7/32	5.56	7/32	5.56	1 5/8	41.27
13/32	10.32	3/4	19.05	31/32	24.61	1 5/8	1 5/8	7/32	5.56	7/32	5.56	1 5/8	41.27
7/16	11.11	3/4	19.05	31/32	24.61	1 5/8	1 5/8	7/32	5.56	7/32	5.56	1 5/8	41.27
15/32	11.91	3/4	19.05	31/32	24.61	1 5/8	1 5/8	7/32	5.56	7/32	5.56	1 5/8	41.27
1/2	12.70	3/4	19.05	31/32	24.61	1 5/8	1 5/8	7/32	5.56	7/32	5.56	1 5/8	41.27
17/32	13.49	3/4	19.05	31/32	24.61	1 5/8	1 5/8	7/32	5.56	7/32	5.56	1 5/8	41.27
9/16	14.29	3/4	19.05	31/32	24.61	1 5/8	1 5/8	7/32	5.56	7/32	5.56	1 5/8	41.27
19/32	15.08	3/4	19.05	31/32	24.61	1 5/8	1 5/8	7/32	5.56	7/32	5.56	1 5/8	41.27
5/8	15.87	3/4	19.05	31/32	24.61	1 5/8	1 5/8	7/32	5.56	7/32	5.56	1 5/8	41.27
21/32	16.67	3/4	19.05	31/32	24.61	1 5/8	1 5/8	7/32	5.56	7/32	5.56	1 5/8	41.27
11/16	17.46	3/4	19.05	31/32	24.61	1 5/8	1 5/8	7/32	5.56	7/32	5.56	1 5/8	41.27
23/32	18.26	3/4	19.05	31/32	24.61	1 5/8	1 5/8	7/32	5.56	7/32	5.56	1 5/8	41.27
3/4	19.05	3/4	19.05	31/32	24.61	1 5/8	1 5/8	7/32	5.56	7/32	5.56	1 5/8	41.27
3/16	4.76	3/4	19.05	1	25.40	1 5/8	1 5/8	7/32	5.56	7/32	5.56	1 5/8	41.27
7/32	5.56	3/4	19.05	1	25.40	1 5/8	1 5/8	7/32	5.56	7/32	5.56	1 5/8	41.27
1/4	6.35	3/4	19.05	1	25.40	1 5/8	1 5/8	7/32	5.56	7/32	5.56	1 5/8	41.27
9/32	7.14	3/4	19.05	1	25.40	1 5/8	1 5/8	7/32	5.56	7/32	5.56	1 5/8	41.27
5/16	7.94	3/4	19.05	1	25.40	1 5/8	1 5/8	7/32	5.56	7/32	5.56	1 5/8	41.27
11/32	8.73	3/4	19.05	1	25.40	1 5/8	1 5/8	7/32	5.56	7/32	5.56	1 5/8	41.27
3/8	9.52	3/4	19.05	1	25.40	1 5/8	1 5/8	7/32	5.56	7/32	5.56	1 5/8	41.27
13/32	10.32	3/4	19.05	1	25.40	1 5/8	1 5/8	7/32	5.56	7/32	5.56	1 5/8	41.27
7/16	11.11	3/4	19.05	1	25.40	1 5/8	1 5/8	7/32	5.56	7/32	5.56	1 5/8	41.27
15/32	11.91	3/4	19.05	1	25.40	1 5/8	1 5/8	7/32	5.56	7/32	5.56	1 5/8	41.27
1/2	12.70	3/4	19.05	1	25.40	1 5/8	1 5/8	7/32	5.56	7/32	5.56	1 5/8	41.27
17/32	13.49	3/4	19.05	1	25.40	1 5/8	1 5/8	7/32	5.56	7/32	5.56	1 5/8	41.27
9/16	14.29	3/4	19.05	1	25.40	1 5/8	1 5/8	7/32	5.56	7/32	5.56	1 5/8	41.27
19/32	15.08	3/4	19.05	1	25.40	1 5/8	1 5/8	7/32	5.56	7/32	5.56	1 5/8	41.27
5/8	15.87	3/4	19.05	1	25.40	1 5/8	1 5/8	7/32	5.56	7/32	5.56	1 5/8	41.27
21/32	16.67	3/4	19.05	1	25.40	1 5/8	1 5/8	7/32	5.56	7/32	5.56	1 5/8	41.27
11/16	17.46	3/4	19.05	1	25.40	1 5/8	1 5/8	7/32	5.56	7/32	5.56	1 5/8	41.27

www.globaltungsten.com

B		E		D		M	A	L		T		C	
inch	mm	inch	mm	inch	mm	inch	inch	inch	mm	inch	mm	inch	mm
23/32	18.26	3/4	19.05	1	25.40	1 5/8	1 5/8	7/32	5.56	7/32	5.56	1 5/8	41.27
3/4	19.05	3/4	19.05	1	25.40	1 5/8	1 5/8	7/32	5.56	7/32	5.56	1 5/8	41.27
3/16	4.76	3/4	19.05	1 1/8	28.57	1 5/8	1 5/8	7/32	5.56	7/32	5.56	1 5/8	41.27
7/32	5.56	3/4	19.05	1 1/8	28.57	1 5/8	1 5/8	7/32	5.56	7/32	5.56	1 5/8	41.27
1/4	6.35	3/4	19.05	1 1/8	28.57	1 5/8	1 5/8	7/32	5.56	7/32	5.56	1 5/8	41.27
9/32	7.14	3/4	19.05	1 1/8	28.57	1 5/8	1 5/8	7/32	5.56	7/32	5.56	1 5/8	41.27
5/16	7.94	3/4	19.05	1 1/8	28.57	1 5/8	1 5/8	7/32	5.56	7/32	5.56	1 5/8	41.27
11/32	8.73	3/4	19.05	1 1/8	28.57	1 5/8	1 5/8	7/32	5.56	7/32	5.56	1 5/8	41.27
3/8	9.52	3/4	19.05	1 1/8	28.57	1 5/8	1 5/8	7/32	5.56	7/32	5.56	1 5/8	41.27
13/32	10.32	3/4	19.05	1 1/8	28.57	1 5/8	1 5/8	7/32	5.56	7/32	5.56	1 5/8	41.27
7/16	11.11	3/4	19.05	1 1/8	28.57	1 5/8	1 5/8	7/32	5.56	7/32	5.56	1 5/8	41.27
15/32	11.91	3/4	19.05	1 1/8	28.57	1 5/8	1 5/8	7/32	5.56	7/32	5.56	1 5/8	41.27
1/2	12.70	3/4	19.05	1 1/8	28.57	1 5/8	1 5/8	7/32	5.56	7/32	5.56	1 5/8	41.27
17/32	13.49	3/4	19.05	1 1/8	28.57	1 5/8	1 5/8	7/32	5.56	7/32	5.56	1 5/8	41.27
9/16	14.29	3/4	19.05	1 1/8	28.57	1 5/8	1 5/8	7/32	5.56	7/32	5.56	1 5/8	41.27
19/32	15.08	3/4	19.05	1 1/8	28.57	1 5/8	1 5/8	7/32	5.56	7/32	5.56	1 5/8	41.27
5/8	15.87	3/4	19.05	1 1/8	28.57	1 5/8	1 5/8	7/32	5.56	7/32	5.56	1 5/8	41.27
21/32	16.67	3/4	19.05	1 1/8	28.57	1 5/8	1 5/8	7/32	5.56	7/32	5.56	1 5/8	41.27
11/16	17.46	3/4	19.05	1 1/8	28.57	1 5/8	1 5/8	7/32	5.56	7/32	5.56	1 5/8	41.27
23/32	18.26	3/4	19.05	1 1/8	28.57	1 5/8	1 5/8	7/32	5.56	7/32	5.56	1 5/8	41.27
3/4	19.05	3/4	19.05	1 1/8	28.57	1 5/8	1 5/8	7/32	5.56	7/32	5.56	1 5/8	41.27
3/16	4.76	3/4	19.05	1 1/4	31.75	1 5/8	1 5/8	7/32	5.56	7/32	5.56	1 5/8	41.27
7/32	5.56	3/4	19.05	1 1/4	31.75	1 5/8	1 5/8	7/32	5.56	7/32	5.56	1 5/8	41.27
1/4	6.35	3/4	19.05	1 1/4	31.75	1 5/8	1 5/8	7/32	5.56	7/32	5.56	1 5/8	41.27
9/32	7.14	3/4	19.05	1 1/4	31.75	1 5/8	1 5/8	7/32	5.56	7/32	5.56	1 5/8	41.27
5/16	7.94	3/4	19.05	1 1/4	31.75	1 5/8	1 5/8	7/32	5.56	7/32	5.56	1 5/8	41.27
11/32	8.73	3/4	19.05	1 1/4	31.75	1 5/8	1 5/8	7/32	5.56	7/32	5.56	1 5/8	41.27
3/8	9.52	3/4	19.05	1 1/4	31.75	1 5/8	1 5/8	7/32	5.56	7/32	5.56	1 5/8	41.27
13/32	10.32	3/4	19.05	1 1/4	31.75	1 5/8	1 5/8	7/32	5.56	7/32	5.56	1 5/8	41.27
7/16	11.11	3/4	19.05	1 1/4	31.75	1 5/8	1 5/8	7/32	5.56	7/32	5.56	1 5/8	41.27
15/32	11.91	3/4	19.05	1 1/4	31.75	1 5/8	1 5/8	7/32	5.56	7/32	5.56	1 5/8	41.27
1/2	12.70	3/4	19.05	1 1/4	31.75	1 5/8	1 5/8	7/32	5.56	7/32	5.56	1 5/8	41.27
17/32	13.49	3/4	19.05	1 1/4	31.75	1 5/8	1 5/8	7/32	5.56	7/32	5.56	1 5/8	41.27
9/16	14.29	3/4	19.05	1 1/4	31.75	1 5/8	1 5/8	7/32	5.56	7/32	5.56	1 5/8	41.27
19/32	15.08	3/4	19.05	1 1/4	31.75	1 5/8	1 5/8	7/32	5.56	7/32	5.56	1 5/8	41.27
5/8	15.87	3/4	19.05	1 1/4	31.75	1 5/8	1 5/8	7/32	5.56	7/32	5.56	1 5/8	41.27
21/32	16.67	3/4	19.05	1 1/4	31.75	1 5/8	1 5/8	7/32	5.56	7/32	5.56	1 5/8	41.27
11/16	17.46	3/4	19.05	1 1/4	31.75	1 5/8	1 5/8	7/32	5.56	7/32	5.56	1 5/8	41.27
23/32	18.26	3/4	19.05	1 1/4	31.75	1 5/8	1 5/8	7/32	5.56	7/32	5.56	1 5/8	41.27
3/4	19.05	3/4	19.05	1 1/4	31.75	1 5/8	1 5/8	7/32	5.56	7/32	5.56	1 5/8	41.27
3/16	4.76	3/4	19.05	1 3/8	34.92	1 5/8	1 5/8	7/32	5.56	7/32	5.56	1 5/8	41.27
7/32	5.56	3/4	19.05	1 3/8	34.92	1 5/8	1 5/8	7/32	5.56	7/32	5.56	1 5/8	41.27
1/4	6.35	3/4	19.05	1 3/8	34.92	1 5/8	1 5/8	7/32	5.56	7/32	5.56	1 5/8	41.27
9/32	7.14	3/4	19.05	1 3/8	34.92	1 5/8	1 5/8	7/32	5.56	7/32	5.56	1 5/8	41.27
5/16	7.94	3/4	19.05	1 3/8	34.92	1 5/8	1 5/8	7/32	5.56	7/32	5.56	1 5/8	41.27

www.globaltungsteins.com

B		E		D		M	A	L		T		C	
inch	mm	inch	mm	inch	mm	inch	inch	inch	mm	inch	mm	inch	mm
11/32	8.73	3/4	19.05	1 3/8	34.92	1 5/8	1 5/8	7/32	5.56	7/32	5.56	1 5/8	41.27
3/8	9.52	3/4	19.05	1 3/8	34.92	1 5/8	1 5/8	7/32	5.56	7/32	5.56	1 5/8	41.27
13/32	10.32	3/4	19.05	1 3/8	34.92	1 5/8	1 5/8	7/32	5.56	7/32	5.56	1 5/8	41.27
7/16	11.11	3/4	19.05	1 3/8	34.92	1 5/8	1 5/8	7/32	5.56	7/32	5.56	1 5/8	41.27
15/32	11.91	3/4	19.05	1 3/8	34.92	1 5/8	1 5/8	7/32	5.56	7/32	5.56	1 5/8	41.27
1/2	12.70	3/4	19.05	1 3/8	34.92	1 5/8	1 5/8	7/32	5.56	7/32	5.56	1 5/8	41.27
17/32	13.49	3/4	19.05	1 3/8	34.92	1 5/8	1 5/8	7/32	5.56	7/32	5.56	1 5/8	41.27
9/16	14.29	3/4	19.05	1 3/8	34.92	1 5/8	1 5/8	7/32	5.56	7/32	5.56	1 5/8	41.27
19/32	15.08	3/4	19.05	1 3/8	34.92	1 5/8	1 5/8	7/32	5.56	7/32	5.56	1 5/8	41.27
5/8	15.87	3/4	19.05	1 3/8	34.92	1 5/8	1 5/8	7/32	5.56	7/32	5.56	1 5/8	41.27
21/32	16.67	3/4	19.05	1 3/8	34.92	1 5/8	1 5/8	7/32	5.56	7/32	5.56	1 5/8	41.27
11/16	17.46	3/4	19.05	1 3/8	34.92	1 5/8	1 5/8	7/32	5.56	7/32	5.56	1 5/8	41.27
23/32	18.26	3/4	19.05	1 3/8	34.92	1 5/8	1 5/8	7/32	5.56	7/32	5.56	1 5/8	41.27
3/4	19.05	3/4	19.05	1 3/8	34.92	1 5/8	1 5/8	7/32	5.56	7/32	5.56	1 5/8	41.27
3/16	4.76	5/8	15.87	25/32	19.84	1 5/8	1 5/8	7/32	5.56	7/32	5.56	1 5/8	41.27
3/16	4.76	5/8	15.87	13/16	20.64	1 5/8	1 5/8	7/32	5.56	7/32	5.56	1 5/8	41.27
3/16	4.76	5/8	15.87	27/32	21.43	1 5/8	1 5/8	7/32	5.56	7/32	5.56	1 5/8	41.27
3/16	4.76	5/8	15.87	7/8	22.22	1 5/8	1 5/8	7/32	5.56	7/32	5.56	1 5/8	41.27
3/16	4.76	5/8	15.87	29/32	23.02	1 5/8	1 5/8	7/32	5.56	7/32	5.56	1 5/8	41.27
3/16	4.76	5/8	15.87	15/16	23.81	1 5/8	1 5/8	7/32	5.56	7/32	5.56	1 5/8	41.27
3/16	4.76	5/8	15.87	31/32	24.61	1 5/8	1 5/8	7/32	5.56	7/32	5.56	1 5/8	41.27
3/16	4.76	5/8	15.87	1	25.40	1 5/8	1 5/8	7/32	5.56	7/32	5.56	1 5/8	41.27
3/16	4.76	5/8	15.87	1 1/8	28.57	1 5/8	1 5/8	7/32	5.56	7/32	5.56	1 5/8	41.27
3/16	4.76	5/8	15.87	1 1/4	31.75	1 5/8	1 5/8	7/32	5.56	7/32	5.56	1 5/8	41.27
3/16	4.76	5/8	15.87	1 3/8	34.92	1 5/8	1 5/8	7/32	5.56	7/32	5.56	1 5/8	41.27
7/32	5.56	5/8	15.87	25/32	19.84	1 5/8	1 5/8	7/32	5.56	7/32	5.56	1 5/8	41.27
7/32	5.56	5/8	15.87	13/16	20.64	1 5/8	1 5/8	7/32	5.56	7/32	5.56	1 5/8	41.27
7/32	5.56	5/8	15.87	27/32	21.43	1 5/8	1 5/8	7/32	5.56	7/32	5.56	1 5/8	41.27
7/32	5.56	5/8	15.87	7/8	22.22	1 5/8	1 5/8	7/32	5.56	7/32	5.56	1 5/8	41.27
7/32	5.56	5/8	15.87	29/32	23.02	1 5/8	1 5/8	7/32	5.56	7/32	5.56	1 5/8	41.27
7/32	5.56	5/8	15.87	15/16	23.81	1 5/8	1 5/8	7/32	5.56	7/32	5.56	1 5/8	41.27
7/32	5.56	5/8	15.87	31/32	24.61	1 5/8	1 5/8	7/32	5.56	7/32	5.56	1 5/8	41.27
7/32	5.56	5/8	15.87	1	25.40	1 5/8	1 5/8	7/32	5.56	7/32	5.56	1 5/8	41.27
7/32	5.56	5/8	15.87	1 1/8	28.57	1 5/8	1 5/8	7/32	5.56	7/32	5.56	1 5/8	41.27
7/32	5.56	5/8	15.87	1 1/4	31.75	1 5/8	1 5/8	7/32	5.56	7/32	5.56	1 5/8	41.27
7/32	5.56	5/8	15.87	1 3/8	34.92	1 5/8	1 5/8	7/32	5.56	7/32	5.56	1 5/8	41.27
1/4	6.35	5/8	15.87	25/32	19.84	1 5/8	1 5/8	7/32	5.56	7/32	5.56	1 5/8	41.27
1/4	6.35	5/8	15.87	13/16	20.64	1 5/8	1 5/8	7/32	5.56	7/32	5.56	1 5/8	41.27
1/4	6.35	5/8	15.87	27/32	21.43	1 5/8	1 5/8	7/32	5.56	7/32	5.56	1 5/8	41.27
1/4	6.35	5/8	15.87	7/8	22.22	1 5/8	1 5/8	7/32	5.56	7/32	5.56	1 5/8	41.27
1/4	6.35	5/8	15.87	29/32	23.02	1 5/8	1 5/8	7/32	5.56	7/32	5.56	1 5/8	41.27
1/4	6.35	5/8	15.87	15/16	23.81	1 5/8	1 5/8	7/32	5.56	7/32	5.56	1 5/8	41.27
1/4	6.35	5/8	15.87	31/32	24.61	1 5/8	1 5/8	7/32	5.56	7/32	5.56	1 5/8	41.27
1/4	6.35	5/8	15.87	1	25.40	1 5/8	1 5/8	7/32	5.56	7/32	5.56	1 5/8	41.27
1/4	6.35	5/8	15.87	1 1/8	28.57	1 5/8	1 5/8	7/32	5.56	7/32	5.56	1 5/8	41.27

www.globaltungsten.com

B		E		D		M	A	L		T		C	
inch	mm	inch	mm	inch	mm	inch	inch	inch	mm	inch	mm	inch	mm
1/4	6.35	5/8	15.87	1 1/4	31.75	1 5/8	1 5/8	7/32	5.56	7/32	5.56	1 5/8	41.27
1/4	6.35	5/8	15.87	1 3/8	34.92	1 5/8	1 5/8	7/32	5.56	7/32	5.56	1 5/8	41.27
9/32	7.14	5/8	15.87	25/32	19.84	1 5/8	1 5/8	7/32	5.56	7/32	5.56	1 5/8	41.27
9/32	7.14	5/8	15.87	13/16	20.64	1 5/8	1 5/8	7/32	5.56	7/32	5.56	1 5/8	41.27
9/32	7.14	5/8	15.87	27/32	21.43	1 5/8	1 5/8	7/32	5.56	7/32	5.56	1 5/8	41.27
9/32	7.14	5/8	15.87	7/8	22.22	1 5/8	1 5/8	7/32	5.56	7/32	5.56	1 5/8	41.27
9/32	7.14	5/8	15.87	29/32	23.02	1 5/8	1 5/8	7/32	5.56	7/32	5.56	1 5/8	41.27
9/32	7.14	5/8	15.87	15/16	23.81	1 5/8	1 5/8	7/32	5.56	7/32	5.56	1 5/8	41.27
9/32	7.14	5/8	15.87	31/32	24.61	1 5/8	1 5/8	7/32	5.56	7/32	5.56	1 5/8	41.27
9/32	7.14	5/8	15.87	1	25.40	1 5/8	1 5/8	7/32	5.56	7/32	5.56	1 5/8	41.27
9/32	7.14	5/8	15.87	1 1/8	28.57	1 5/8	1 5/8	7/32	5.56	7/32	5.56	1 5/8	41.27
9/32	7.14	5/8	15.87	1 1/4	31.75	1 5/8	1 5/8	7/32	5.56	7/32	5.56	1 5/8	41.27
9/32	7.14	5/8	15.87	1 3/8	34.92	1 5/8	1 5/8	7/32	5.56	7/32	5.56	1 5/8	41.27
5/16	7.94	5/8	15.87	25/32	19.84	1 5/8	1 5/8	7/32	5.56	7/32	5.56	1 5/8	41.27
5/16	7.94	5/8	15.87	13/16	20.64	1 5/8	1 5/8	7/32	5.56	7/32	5.56	1 5/8	41.27
5/16	7.94	5/8	15.87	27/32	21.43	1 5/8	1 5/8	7/32	5.56	7/32	5.56	1 5/8	41.27
5/16	7.94	5/8	15.87	7/8	22.22	1 5/8	1 5/8	7/32	5.56	7/32	5.56	1 5/8	41.27
5/16	7.94	5/8	15.87	29/32	23.02	1 5/8	1 5/8	7/32	5.56	7/32	5.56	1 5/8	41.27
5/16	7.94	5/8	15.87	15/16	23.81	1 5/8	1 5/8	7/32	5.56	7/32	5.56	1 5/8	41.27
5/16	7.94	5/8	15.87	31/32	24.61	1 5/8	1 5/8	7/32	5.56	7/32	5.56	1 5/8	41.27
5/16	7.94	5/8	15.87	1	25.40	1 5/8	1 5/8	7/32	5.56	7/32	5.56	1 5/8	41.27
5/16	7.94	5/8	15.87	1 1/8	28.57	1 5/8	1 5/8	7/32	5.56	7/32	5.56	1 5/8	41.27
5/16	7.94	5/8	15.87	1 1/4	31.75	1 5/8	1 5/8	7/32	5.56	7/32	5.56	1 5/8	41.27
5/16	7.94	5/8	15.87	1 3/8	34.92	1 5/8	1 5/8	7/32	5.56	7/32	5.56	1 5/8	41.27
11/32	8.73	5/8	15.87	25/32	19.84	1 5/8	1 5/8	7/32	5.56	7/32	5.56	1 5/8	41.27
11/32	8.73	5/8	15.87	13/16	20.64	1 5/8	1 5/8	7/32	5.56	7/32	5.56	1 5/8	41.27
11/32	8.73	5/8	15.87	27/32	21.43	1 5/8	1 5/8	7/32	5.56	7/32	5.56	1 5/8	41.27
11/32	8.73	5/8	15.87	7/8	22.22	1 5/8	1 5/8	7/32	5.56	7/32	5.56	1 5/8	41.27
11/32	8.73	5/8	15.87	29/32	23.02	1 5/8	1 5/8	7/32	5.56	7/32	5.56	1 5/8	41.27
11/32	8.73	5/8	15.87	15/16	23.81	1 5/8	1 5/8	7/32	5.56	7/32	5.56	1 5/8	41.27
11/32	8.73	5/8	15.87	31/32	24.61	1 5/8	1 5/8	7/32	5.56	7/32	5.56	1 5/8	41.27
11/32	8.73	5/8	15.87	1	25.40	1 5/8	1 5/8	7/32	5.56	7/32	5.56	1 5/8	41.27
11/32	8.73	5/8	15.87	1 1/8	28.57	1 5/8	1 5/8	7/32	5.56	7/32	5.56	1 5/8	41.27
11/32	8.73	5/8	15.87	1 1/4	31.75	1 5/8	1 5/8	7/32	5.56	7/32	5.56	1 5/8	41.27
11/32	8.73	5/8	15.87	1 3/8	34.92	1 5/8	1 5/8	7/32	5.56	7/32	5.56	1 5/8	41.27
3/8	9.52	5/8	15.87	25/32	19.84	1 5/8	1 5/8	7/32	5.56	7/32	5.56	1 5/8	41.27
3/8	9.52	5/8	15.87	13/16	20.64	1 5/8	1 5/8	7/32	5.56	7/32	5.56	1 5/8	41.27
3/8	9.52	5/8	15.87	27/32	21.43	1 5/8	1 5/8	7/32	5.56	7/32	5.56	1 5/8	41.27
3/8	9.52	5/8	15.87	7/8	22.22	1 5/8	1 5/8	7/32	5.56	7/32	5.56	1 5/8	41.27
3/8	9.52	5/8	15.87	29/32	23.02	1 5/8	1 5/8	7/32	5.56	7/32	5.56	1 5/8	41.27
3/8	9.52	5/8	15.87	15/16	23.81	1 5/8	1 5/8	7/32	5.56	7/32	5.56	1 5/8	41.27
3/8	9.52	5/8	15.87	31/32	24.61	1 5/8	1 5/8	7/32	5.56	7/32	5.56	1 5/8	41.27
3/8	9.52	5/8	15.87	1	25.40	1 5/8	1 5/8	7/32	5.56	7/32	5.56	1 5/8	41.27
3/8	9.52	5/8	15.87	1 1/8	28.57	1 5/8	1 5/8	7/32	5.56	7/32	5.56	1 5/8	41.27
3/8	9.52	5/8	15.87	1 1/4	31.75	1 5/8	1 5/8	7/32	5.56	7/32	5.56	1 5/8	41.27

www.globaltungsteins.com

B		E		D		M	A	L		T		C	
inch	mm	inch	mm	inch	mm	inch	inch	inch	mm	inch	mm	inch	mm
3/8	9.52	5/8	15.87	1 3/8	34.92	1 5/8	1 5/8	7/32	5.56	7/32	5.56	1 5/8	41.27
13/32	10.32	5/8	15.87	25/32	19.84	1 5/8	1 5/8	7/32	5.56	7/32	5.56	1 5/8	41.27
13/32	10.32	5/8	15.87	13/16	20.64	1 5/8	1 5/8	7/32	5.56	7/32	5.56	1 5/8	41.27
13/32	10.32	5/8	15.87	27/32	21.43	1 5/8	1 5/8	7/32	5.56	7/32	5.56	1 5/8	41.27
13/32	10.32	5/8	15.87	7/8	22.22	1 5/8	1 5/8	7/32	5.56	7/32	5.56	1 5/8	41.27
13/32	10.32	5/8	15.87	29/32	23.02	1 5/8	1 5/8	7/32	5.56	7/32	5.56	1 5/8	41.27
13/32	10.32	5/8	15.87	15/16	23.81	1 5/8	1 5/8	7/32	5.56	7/32	5.56	1 5/8	41.27
13/32	10.32	5/8	15.87	31/32	24.61	1 5/8	1 5/8	7/32	5.56	7/32	5.56	1 5/8	41.27
13/32	10.32	5/8	15.87	1	25.40	1 5/8	1 5/8	7/32	5.56	7/32	5.56	1 5/8	41.27
13/32	10.32	5/8	15.87	1 1/8	28.57	1 5/8	1 5/8	7/32	5.56	7/32	5.56	1 5/8	41.27
13/32	10.32	5/8	15.87	1 1/4	31.75	1 5/8	1 5/8	7/32	5.56	7/32	5.56	1 5/8	41.27
13/32	10.32	5/8	15.87	1 3/8	34.92	1 5/8	1 5/8	7/32	5.56	7/32	5.56	1 5/8	41.27
7/16	11.11	5/8	15.87	25/32	19.84	1 5/8	1 5/8	7/32	5.56	7/32	5.56	1 5/8	41.27
7/16	11.11	5/8	15.87	13/16	20.64	1 5/8	1 5/8	7/32	5.56	7/32	5.56	1 5/8	41.27
7/16	11.11	5/8	15.87	27/32	21.43	1 5/8	1 5/8	7/32	5.56	7/32	5.56	1 5/8	41.27
7/16	11.11	5/8	15.87	7/8	22.22	1 5/8	1 5/8	7/32	5.56	7/32	5.56	1 5/8	41.27
7/16	11.11	5/8	15.87	29/32	23.02	1 5/8	1 5/8	7/32	5.56	7/32	5.56	1 5/8	41.27
7/16	11.11	5/8	15.87	15/16	23.81	1 5/8	1 5/8	7/32	5.56	7/32	5.56	1 5/8	41.27
7/16	11.11	5/8	15.87	31/32	24.61	1 5/8	1 5/8	7/32	5.56	7/32	5.56	1 5/8	41.27
7/16	11.11	5/8	15.87	1	25.40	1 5/8	1 5/8	7/32	5.56	7/32	5.56	1 5/8	41.27
7/16	11.11	5/8	15.87	1 1/8	28.57	1 5/8	1 5/8	7/32	5.56	7/32	5.56	1 5/8	41.27
7/16	11.11	5/8	15.87	1 1/4	31.75	1 5/8	1 5/8	7/32	5.56	7/32	5.56	1 5/8	41.27
7/16	11.11	5/8	15.87	1 3/8	34.92	1 5/8	1 5/8	7/32	5.56	7/32	5.56	1 5/8	41.27
15/32	11.91	5/8	15.87	25/32	19.84	1 5/8	1 5/8	7/32	5.56	7/32	5.56	1 5/8	41.27
15/32	11.91	5/8	15.87	13/16	20.64	1 5/8	1 5/8	7/32	5.56	7/32	5.56	1 5/8	41.27
15/32	11.91	5/8	15.87	27/32	21.43	1 5/8	1 5/8	7/32	5.56	7/32	5.56	1 5/8	41.27
15/32	11.91	5/8	15.87	7/8	22.22	1 5/8	1 5/8	7/32	5.56	7/32	5.56	1 5/8	41.27
15/32	11.91	5/8	15.87	29/32	23.02	1 5/8	1 5/8	7/32	5.56	7/32	5.56	1 5/8	41.27
15/32	11.91	5/8	15.87	15/16	23.81	1 5/8	1 5/8	7/32	5.56	7/32	5.56	1 5/8	41.27
15/32	11.91	5/8	15.87	31/32	24.61	1 5/8	1 5/8	7/32	5.56	7/32	5.56	1 5/8	41.27
15/32	11.91	5/8	15.87	1	25.40	1 5/8	1 5/8	7/32	5.56	7/32	5.56	1 5/8	41.27
15/32	11.91	5/8	15.87	1 1/8	28.57	1 5/8	1 5/8	7/32	5.56	7/32	5.56	1 5/8	41.27
15/32	11.91	5/8	15.87	1 1/4	31.75	1 5/8	1 5/8	7/32	5.56	7/32	5.56	1 5/8	41.27
15/32	11.91	5/8	15.87	1 3/8	34.92	1 5/8	1 5/8	7/32	5.56	7/32	5.56	1 5/8	41.27
1/2	12.70	5/8	15.87	25/32	19.84	1 5/8	1 5/8	7/32	5.56	7/32	5.56	1 5/8	41.27
1/2	12.70	5/8	15.87	13/16	20.64	1 5/8	1 5/8	7/32	5.56	7/32	5.56	1 5/8	41.27
1/2	12.70	5/8	15.87	27/32	21.43	1 5/8	1 5/8	7/32	5.56	7/32	5.56	1 5/8	41.27
1/2	12.70	5/8	15.87	7/8	22.22	1 5/8	1 5/8	7/32	5.56	7/32	5.56	1 5/8	41.27
1/2	12.70	5/8	15.87	29/32	23.02	1 5/8	1 5/8	7/32	5.56	7/32	5.56	1 5/8	41.27
1/2	12.70	5/8	15.87	15/16	23.81	1 5/8	1 5/8	7/32	5.56	7/32	5.56	1 5/8	41.27
1/2	12.70	5/8	15.87	31/32	24.61	1 5/8	1 5/8	7/32	5.56	7/32	5.56	1 5/8	41.27
1/2	12.70	5/8	15.87	1	25.40	1 5/8	1 5/8	7/32	5.56	7/32	5.56	1 5/8	41.27
1/2	12.70	5/8	15.87	1 1/8	28.57	1 5/8	1 5/8	7/32	5.56	7/32	5.56	1 5/8	41.27
1/2	12.70	5/8	15.87	1 1/4	31.75	1 5/8	1 5/8	7/32	5.56	7/32	5.56	1 5/8	41.27
1/2	12.70	5/8	15.87	1 3/8	34.92	1 5/8	1 5/8	7/32	5.56	7/32	5.56	1 5/8	41.27

www.globaltungsten.com

B		E		D		M	A	L		T		C	
inch	mm	inch	mm	inch	mm	inch	inch	inch	mm	inch	mm	inch	mm
17/32	13.49	5/8	15.87	25/32	19.84	1 5/8	1 5/8	7/32	5.56	7/32	5.56	1 5/8	41.27
17/32	13.49	5/8	15.87	13/16	20.64	1 5/8	1 5/8	7/32	5.56	7/32	5.56	1 5/8	41.27
17/32	13.49	5/8	15.87	27/32	21.43	1 5/8	1 5/8	7/32	5.56	7/32	5.56	1 5/8	41.27
17/32	13.49	5/8	15.87	7/8	22.22	1 5/8	1 5/8	7/32	5.56	7/32	5.56	1 5/8	41.27
17/32	13.49	5/8	15.87	29/32	23.02	1 5/8	1 5/8	7/32	5.56	7/32	5.56	1 5/8	41.27
17/32	13.49	5/8	15.87	15/16	23.81	1 5/8	1 5/8	7/32	5.56	7/32	5.56	1 5/8	41.27
17/32	13.49	5/8	15.87	31/32	24.61	1 5/8	1 5/8	7/32	5.56	7/32	5.56	1 5/8	41.27
17/32	13.49	5/8	15.87	1	25.40	1 5/8	1 5/8	7/32	5.56	7/32	5.56	1 5/8	41.27
17/32	13.49	5/8	15.87	1 1/8	28.57	1 5/8	1 5/8	7/32	5.56	7/32	5.56	1 5/8	41.27
17/32	13.49	5/8	15.87	1 1/4	31.75	1 5/8	1 5/8	7/32	5.56	7/32	5.56	1 5/8	41.27
17/32	13.49	5/8	15.87	1 3/8	34.92	1 5/8	1 5/8	7/32	5.56	7/32	5.56	1 5/8	41.27
9/16	14.29	5/8	15.87	25/32	19.84	1 5/8	1 5/8	7/32	5.56	7/32	5.56	1 5/8	41.27
9/16	14.29	5/8	15.87	13/16	20.64	1 5/8	1 5/8	7/32	5.56	7/32	5.56	1 5/8	41.27
9/16	14.29	5/8	15.87	27/32	21.43	1 5/8	1 5/8	7/32	5.56	7/32	5.56	1 5/8	41.27
9/16	14.29	5/8	15.87	7/8	22.22	1 5/8	1 5/8	7/32	5.56	7/32	5.56	1 5/8	41.27
9/16	14.29	5/8	15.87	29/32	23.02	1 5/8	1 5/8	7/32	5.56	7/32	5.56	1 5/8	41.27
9/16	14.29	5/8	15.87	15/16	23.81	1 5/8	1 5/8	7/32	5.56	7/32	5.56	1 5/8	41.27
9/16	14.29	5/8	15.87	31/32	24.61	1 5/8	1 5/8	7/32	5.56	7/32	5.56	1 5/8	41.27
9/16	14.29	5/8	15.87	1	25.40	1 5/8	1 5/8	7/32	5.56	7/32	5.56	1 5/8	41.27
9/16	14.29	5/8	15.87	1 1/8	28.57	1 5/8	1 5/8	7/32	5.56	7/32	5.56	1 5/8	41.27
9/16	14.29	5/8	15.87	1 1/4	31.75	1 5/8	1 5/8	7/32	5.56	7/32	5.56	1 5/8	41.27
9/16	14.29	5/8	15.87	1 3/8	34.92	1 5/8	1 5/8	7/32	5.56	7/32	5.56	1 5/8	41.27
19/32	15.08	5/8	15.87	25/32	19.84	1 5/8	1 5/8	7/32	5.56	7/32	5.56	1 5/8	41.27
19/32	15.08	5/8	15.87	13/16	20.64	1 5/8	1 5/8	7/32	5.56	7/32	5.56	1 5/8	41.27
19/32	15.08	5/8	15.87	27/32	21.43	1 5/8	1 5/8	7/32	5.56	7/32	5.56	1 5/8	41.27
19/32	15.08	5/8	15.87	7/8	22.22	1 5/8	1 5/8	7/32	5.56	7/32	5.56	1 5/8	41.27
19/32	15.08	5/8	15.87	29/32	23.02	1 5/8	1 5/8	7/32	5.56	7/32	5.56	1 5/8	41.27
19/32	15.08	5/8	15.87	15/16	23.81	1 5/8	1 5/8	7/32	5.56	7/32	5.56	1 5/8	41.27
19/32	15.08	5/8	15.87	31/32	24.61	1 5/8	1 5/8	7/32	5.56	7/32	5.56	1 5/8	41.27
19/32	15.08	5/8	15.87	1	25.40	1 5/8	1 5/8	7/32	5.56	7/32	5.56	1 5/8	41.27
19/32	15.08	5/8	15.87	1 1/8	28.57	1 5/8	1 5/8	7/32	5.56	7/32	5.56	1 5/8	41.27
19/32	15.08	5/8	15.87	1 1/4	31.75	1 5/8	1 5/8	7/32	5.56	7/32	5.56	1 5/8	41.27
19/32	15.08	5/8	15.87	1 3/8	34.92	1 5/8	1 5/8	7/32	5.56	7/32	5.56	1 5/8	41.27
5/8	15.87	5/8	15.87	25/32	19.84	1 5/8	1 5/8	7/32	5.56	7/32	5.56	1 5/8	41.27
5/8	15.87	5/8	15.87	13/16	20.64	1 5/8	1 5/8	7/32	5.56	7/32	5.56	1 5/8	41.27
5/8	15.87	5/8	15.87	27/32	21.43	1 5/8	1 5/8	7/32	5.56	7/32	5.56	1 5/8	41.27
5/8	15.87	5/8	15.87	7/8	22.22	1 5/8	1 5/8	7/32	5.56	7/32	5.56	1 5/8	41.27
5/8	15.87	5/8	15.87	29/32	23.02	1 5/8	1 5/8	7/32	5.56	7/32	5.56	1 5/8	41.27
5/8	15.87	5/8	15.87	15/16	23.81	1 5/8	1 5/8	7/32	5.56	7/32	5.56	1 5/8	41.27
5/8	15.87	5/8	15.87	31/32	24.61	1 5/8	1 5/8	7/32	5.56	7/32	5.56	1 5/8	41.27
5/8	15.87	5/8	15.87	1	25.40	1 5/8	1 5/8	7/32	5.56	7/32	5.56	1 5/8	41.27
5/8	15.87	5/8	15.87	1 1/8	28.57	1 5/8	1 5/8	7/32	5.56	7/32	5.56	1 5/8	41.27
5/8	15.87	5/8	15.87	1 1/4	31.75	1 5/8	1 5/8	7/32	5.56	7/32	5.56	1 5/8	41.27
5/8	15.87	5/8	15.87	1 3/8	34.92	1 5/8	1 5/8	7/32	5.56	7/32	5.56	1 5/8	41.27
3/16	4.76	1/2	12.70	21/32	16.67	1 5/8	1 5/8	7/32	5.56	7/32	5.56	1 5/8	41.27

www.globaltungsten.com

B		E		D		M	A	L		T		C	
inch	mm	inch	mm	inch	mm	inch	inch	inch	mm	inch	mm	inch	mm
3/16	4.76	1/2	12.70	11/16	17.46	1 5/8	1 5/8	7/32	5.56	7/32	5.56	1 5/8	41.27
3/16	4.76	1/2	12.70	23/32	18.26	1 5/8	1 5/8	7/32	5.56	7/32	5.56	1 5/8	41.27
3/16	4.76	1/2	12.70	3/4	19.05	1 5/8	1 5/8	7/32	5.56	7/32	5.56	1 5/8	41.27
3/16	4.76	1/2	12.70	25/32	19.84	1 5/8	1 5/8	7/32	5.56	7/32	5.56	1 5/8	41.27
3/16	4.76	1/2	12.70	13/16	20.64	1 5/8	1 5/8	7/32	5.56	7/32	5.56	1 5/8	41.27
3/16	4.76	1/2	12.70	27/32	21.43	1 5/8	1 5/8	7/32	5.56	7/32	5.56	1 5/8	41.27
3/16	4.76	1/2	12.70	7/8	22.22	1 5/8	1 5/8	7/32	5.56	7/32	5.56	1 5/8	41.27
3/16	4.76	1/2	12.70	29/32	23.02	1 5/8	1 5/8	7/32	5.56	7/32	5.56	1 5/8	41.27
3/16	4.76	1/2	12.70	15/16	23.81	1 5/8	1 5/8	7/32	5.56	7/32	5.56	1 5/8	41.27
3/16	4.76	1/2	12.70	31/32	24.61	1 5/8	1 5/8	7/32	5.56	7/32	5.56	1 5/8	41.27
3/16	4.76	1/2	12.70	1	25.40	1 5/8	1 5/8	7/32	5.56	7/32	5.56	1 5/8	41.27
3/16	4.76	1/2	12.70	1 1/8	28.57	1 5/8	1 5/8	7/32	5.56	7/32	5.56	1 5/8	41.27
3/16	4.76	1/2	12.70	1 1/4	31.75	1 5/8	1 5/8	7/32	5.56	7/32	5.56	1 5/8	41.27
3/16	4.76	1/2	12.70	1 3/8	34.92	1 5/8	1 5/8	7/32	5.56	7/32	5.56	1 5/8	41.27
7/32	5.56	1/2	12.70	21/32	16.67	1 5/8	1 5/8	7/32	5.56	7/32	5.56	1 5/8	41.27
7/32	5.56	1/2	12.70	11/16	17.46	1 5/8	1 5/8	7/32	5.56	7/32	5.56	1 5/8	41.27
7/32	5.56	1/2	12.70	23/32	18.26	1 5/8	1 5/8	7/32	5.56	7/32	5.56	1 5/8	41.27
7/32	5.56	1/2	12.70	3/4	19.05	1 5/8	1 5/8	7/32	5.56	7/32	5.56	1 5/8	41.27
7/32	5.56	1/2	12.70	25/32	19.84	1 5/8	1 5/8	7/32	5.56	7/32	5.56	1 5/8	41.27
7/32	5.56	1/2	12.70	13/16	20.64	1 5/8	1 5/8	7/32	5.56	7/32	5.56	1 5/8	41.27
7/32	5.56	1/2	12.70	27/32	21.43	1 5/8	1 5/8	7/32	5.56	7/32	5.56	1 5/8	41.27
7/32	5.56	1/2	12.70	7/8	22.22	1 5/8	1 5/8	7/32	5.56	7/32	5.56	1 5/8	41.27
7/32	5.56	1/2	12.70	29/32	23.02	1 5/8	1 5/8	7/32	5.56	7/32	5.56	1 5/8	41.27
7/32	5.56	1/2	12.70	15/16	23.81	1 5/8	1 5/8	7/32	5.56	7/32	5.56	1 5/8	41.27
7/32	5.56	1/2	12.70	31/32	24.61	1 5/8	1 5/8	7/32	5.56	7/32	5.56	1 5/8	41.27
7/32	5.56	1/2	12.70	1	25.40	1 5/8	1 5/8	7/32	5.56	7/32	5.56	1 5/8	41.27
7/32	5.56	1/2	12.70	1 1/8	28.57	1 5/8	1 5/8	7/32	5.56	7/32	5.56	1 5/8	41.27
7/32	5.56	1/2	12.70	1 1/4	31.75	1 5/8	1 5/8	7/32	5.56	7/32	5.56	1 5/8	41.27
7/32	5.56	1/2	12.70	1 3/8	34.92	1 5/8	1 5/8	7/32	5.56	7/32	5.56	1 5/8	41.27
1/4	6.35	1/2	12.70	21/32	16.67	1 5/8	1 5/8	7/32	5.56	7/32	5.56	1 5/8	41.27
1/4	6.35	1/2	12.70	11/16	17.46	1 5/8	1 5/8	7/32	5.56	7/32	5.56	1 5/8	41.27
1/4	6.35	1/2	12.70	23/32	18.26	1 5/8	1 5/8	7/32	5.56	7/32	5.56	1 5/8	41.27
1/4	6.35	1/2	12.70	3/4	19.05	1 5/8	1 5/8	7/32	5.56	7/32	5.56	1 5/8	41.27
1/4	6.35	1/2	12.70	25/32	19.84	1 5/8	1 5/8	7/32	5.56	7/32	5.56	1 5/8	41.27
1/4	6.35	1/2	12.70	13/16	20.64	1 5/8	1 5/8	7/32	5.56	7/32	5.56	1 5/8	41.27
1/4	6.35	1/2	12.70	27/32	21.43	1 5/8	1 5/8	7/32	5.56	7/32	5.56	1 5/8	41.27
1/4	6.35	1/2	12.70	7/8	22.22	1 5/8	1 5/8	7/32	5.56	7/32	5.56	1 5/8	41.27
1/4	6.35	1/2	12.70	29/32	23.02	1 5/8	1 5/8	7/32	5.56	7/32	5.56	1 5/8	41.27
1/4	6.35	1/2	12.70	15/16	23.81	1 5/8	1 5/8	7/32	5.56	7/32	5.56	1 5/8	41.27
1/4	6.35	1/2	12.70	31/32	24.61	1 5/8	1 5/8	7/32	5.56	7/32	5.56	1 5/8	41.27
1/4	6.35	1/2	12.70	1	25.40	1 5/8	1 5/8	7/32	5.56	7/32	5.56	1 5/8	41.27
1/4	6.35	1/2	12.70	1 1/8	28.57	1 5/8	1 5/8	7/32	5.56	7/32	5.56	1 5/8	41.27
1/4	6.35	1/2	12.70	1 1/4	31.75	1 5/8	1 5/8	7/32	5.56	7/32	5.56	1 5/8	41.27
1/4	6.35	1/2	12.70	1 3/8	34.92	1 5/8	1 5/8	7/32	5.56	7/32	5.56	1 5/8	41.27
9/32	7.14	1/2	12.70	21/32	16.67	1 5/8	1 5/8	7/32	5.56	7/32	5.56	1 5/8	41.27

www.globaltungsters.com

B		E		D		M	A	L		T		C	
inch	mm	inch	mm	inch	mm	inch	inch	inch	mm	inch	mm	inch	mm
9/32	7.14	1/2	12.70	11/16	17.46	1 5/8	1 5/8	7/32	5.56	7/32	5.56	1 5/8	41.27
9/32	7.14	1/2	12.70	23/32	18.26	1 5/8	1 5/8	7/32	5.56	7/32	5.56	1 5/8	41.27
9/32	7.14	1/2	12.70	3/4	19.05	1 5/8	1 5/8	7/32	5.56	7/32	5.56	1 5/8	41.27
9/32	7.14	1/2	12.70	25/32	19.84	1 5/8	1 5/8	7/32	5.56	7/32	5.56	1 5/8	41.27
9/32	7.14	1/2	12.70	13/16	20.64	1 5/8	1 5/8	7/32	5.56	7/32	5.56	1 5/8	41.27
9/32	7.14	1/2	12.70	27/32	21.43	1 5/8	1 5/8	7/32	5.56	7/32	5.56	1 5/8	41.27
9/32	7.14	1/2	12.70	7/8	22.22	1 5/8	1 5/8	7/32	5.56	7/32	5.56	1 5/8	41.27
9/32	7.14	1/2	12.70	29/32	23.02	1 5/8	1 5/8	7/32	5.56	7/32	5.56	1 5/8	41.27
9/32	7.14	1/2	12.70	15/16	23.81	1 5/8	1 5/8	7/32	5.56	7/32	5.56	1 5/8	41.27
9/32	7.14	1/2	12.70	31/32	24.61	1 5/8	1 5/8	7/32	5.56	7/32	5.56	1 5/8	41.27
9/32	7.14	1/2	12.70	1	25.40	1 5/8	1 5/8	7/32	5.56	7/32	5.56	1 5/8	41.27
9/32	7.14	1/2	12.70	1 1/8	28.57	1 5/8	1 5/8	7/32	5.56	7/32	5.56	1 5/8	41.27
9/32	7.14	1/2	12.70	1 1/4	31.75	1 5/8	1 5/8	7/32	5.56	7/32	5.56	1 5/8	41.27
9/32	7.14	1/2	12.70	1 3/8	34.92	1 5/8	1 5/8	7/32	5.56	7/32	5.56	1 5/8	41.27
5/16	7.94	1/2	12.70	21/32	16.67	1 5/8	1 5/8	7/32	5.56	7/32	5.56	1 5/8	41.27
5/16	7.94	1/2	12.70	11/16	17.46	1 5/8	1 5/8	7/32	5.56	7/32	5.56	1 5/8	41.27
5/16	7.94	1/2	12.70	23/32	18.26	1 5/8	1 5/8	7/32	5.56	7/32	5.56	1 5/8	41.27
5/16	7.94	1/2	12.70	3/4	19.05	1 5/8	1 5/8	7/32	5.56	7/32	5.56	1 5/8	41.27
5/16	7.94	1/2	12.70	25/32	19.84	1 5/8	1 5/8	7/32	5.56	7/32	5.56	1 5/8	41.27
5/16	7.94	1/2	12.70	13/16	20.64	1 5/8	1 5/8	7/32	5.56	7/32	5.56	1 5/8	41.27
5/16	7.94	1/2	12.70	27/32	21.43	1 5/8	1 5/8	7/32	5.56	7/32	5.56	1 5/8	41.27
5/16	7.94	1/2	12.70	7/8	22.22	1 5/8	1 5/8	7/32	5.56	7/32	5.56	1 5/8	41.27
5/16	7.94	1/2	12.70	29/32	23.02	1 5/8	1 5/8	7/32	5.56	7/32	5.56	1 5/8	41.27
5/16	7.94	1/2	12.70	15/16	23.81	1 5/8	1 5/8	7/32	5.56	7/32	5.56	1 5/8	41.27
5/16	7.94	1/2	12.70	31/32	24.61	1 5/8	1 5/8	7/32	5.56	7/32	5.56	1 5/8	41.27
5/16	7.94	1/2	12.70	1	25.40	1 5/8	1 5/8	7/32	5.56	7/32	5.56	1 5/8	41.27
5/16	7.94	1/2	12.70	1 1/8	28.57	1 5/8	1 5/8	7/32	5.56	7/32	5.56	1 5/8	41.27
5/16	7.94	1/2	12.70	1 1/4	31.75	1 5/8	1 5/8	7/32	5.56	7/32	5.56	1 5/8	41.27
5/16	7.94	1/2	12.70	1 3/8	34.92	1 5/8	1 5/8	7/32	5.56	7/32	5.56	1 5/8	41.27
11/32	8.73	1/2	12.70	21/32	16.67	1 5/8	1 5/8	7/32	5.56	7/32	5.56	1 5/8	41.27
11/32	8.73	1/2	12.70	11/16	17.46	1 5/8	1 5/8	7/32	5.56	7/32	5.56	1 5/8	41.27
11/32	8.73	1/2	12.70	23/32	18.26	1 5/8	1 5/8	7/32	5.56	7/32	5.56	1 5/8	41.27
11/32	8.73	1/2	12.70	3/4	19.05	1 5/8	1 5/8	7/32	5.56	7/32	5.56	1 5/8	41.27
11/32	8.73	1/2	12.70	25/32	19.84	1 5/8	1 5/8	7/32	5.56	7/32	5.56	1 5/8	41.27
11/32	8.73	1/2	12.70	13/16	20.64	1 5/8	1 5/8	7/32	5.56	7/32	5.56	1 5/8	41.27
11/32	8.73	1/2	12.70	27/32	21.43	1 5/8	1 5/8	7/32	5.56	7/32	5.56	1 5/8	41.27
11/32	8.73	1/2	12.70	7/8	22.22	1 5/8	1 5/8	7/32	5.56	7/32	5.56	1 5/8	41.27
11/32	8.73	1/2	12.70	29/32	23.02	1 5/8	1 5/8	7/32	5.56	7/32	5.56	1 5/8	41.27
11/32	8.73	1/2	12.70	15/16	23.81	1 5/8	1 5/8	7/32	5.56	7/32	5.56	1 5/8	41.27
11/32	8.73	1/2	12.70	31/32	24.61	1 5/8	1 5/8	7/32	5.56	7/32	5.56	1 5/8	41.27
11/32	8.73	1/2	12.70	1	25.40	1 5/8	1 5/8	7/32	5.56	7/32	5.56	1 5/8	41.27
11/32	8.73	1/2	12.70	1 1/8	28.57	1 5/8	1 5/8	7/32	5.56	7/32	5.56	1 5/8	41.27
11/32	8.73	1/2	12.70	1 1/4	31.75	1 5/8	1 5/8	7/32	5.56	7/32	5.56	1 5/8	41.27
11/32	8.73	1/2	12.70	1 3/8	34.92	1 5/8	1 5/8	7/32	5.56	7/32	5.56	1 5/8	41.27
3/8	9.52	1/2	12.70	21/32	16.67	1 5/8	1 5/8	7/32	5.56	7/32	5.56	1 5/8	41.27

www.globaltungsten.com

B		E		D		M	A	L		T		C	
inch	mm	inch	mm	inch	mm	inch	inch	inch	mm	inch	mm	inch	mm
3/8	9.52	1/2	12.70	11/16	17.46	1 5/8	1 5/8	7/32	5.56	7/32	5.56	1 5/8	41.27
3/8	9.52	1/2	12.70	23/32	18.26	1 5/8	1 5/8	7/32	5.56	7/32	5.56	1 5/8	41.27
3/8	9.52	1/2	12.70	3/4	19.05	1 5/8	1 5/8	7/32	5.56	7/32	5.56	1 5/8	41.27
3/8	9.52	1/2	12.70	25/32	19.84	1 5/8	1 5/8	7/32	5.56	7/32	5.56	1 5/8	41.27
3/8	9.52	1/2	12.70	13/16	20.64	1 5/8	1 5/8	7/32	5.56	7/32	5.56	1 5/8	41.27
3/8	9.52	1/2	12.70	27/32	21.43	1 5/8	1 5/8	7/32	5.56	7/32	5.56	1 5/8	41.27
3/8	9.52	1/2	12.70	7/8	22.22	1 5/8	1 5/8	7/32	5.56	7/32	5.56	1 5/8	41.27
3/8	9.52	1/2	12.70	29/32	23.02	1 5/8	1 5/8	7/32	5.56	7/32	5.56	1 5/8	41.27
3/8	9.52	1/2	12.70	15/16	23.81	1 5/8	1 5/8	7/32	5.56	7/32	5.56	1 5/8	41.27
3/8	9.52	1/2	12.70	31/32	24.61	1 5/8	1 5/8	7/32	5.56	7/32	5.56	1 5/8	41.27
3/8	9.52	1/2	12.70	1	25.40	1 5/8	1 5/8	7/32	5.56	7/32	5.56	1 5/8	41.27
3/8	9.52	1/2	12.70	1 1/8	28.57	1 5/8	1 5/8	7/32	5.56	7/32	5.56	1 5/8	41.27
3/8	9.52	1/2	12.70	1 1/4	31.75	1 5/8	1 5/8	7/32	5.56	7/32	5.56	1 5/8	41.27
3/8	9.52	1/2	12.70	1 3/8	34.92	1 5/8	1 5/8	7/32	5.56	7/32	5.56	1 5/8	41.27
13/32	10.32	1/2	12.70	21/32	16.67	1 5/8	1 5/8	7/32	5.56	7/32	5.56	1 5/8	41.27
13/32	10.32	1/2	12.70	11/16	17.46	1 5/8	1 5/8	7/32	5.56	7/32	5.56	1 5/8	41.27
13/32	10.32	1/2	12.70	23/32	18.26	1 5/8	1 5/8	7/32	5.56	7/32	5.56	1 5/8	41.27
13/32	10.32	1/2	12.70	3/4	19.05	1 5/8	1 5/8	7/32	5.56	7/32	5.56	1 5/8	41.27
13/32	10.32	1/2	12.70	25/32	19.84	1 5/8	1 5/8	7/32	5.56	7/32	5.56	1 5/8	41.27
13/32	10.32	1/2	12.70	13/16	20.64	1 5/8	1 5/8	7/32	5.56	7/32	5.56	1 5/8	41.27
13/32	10.32	1/2	12.70	27/32	21.43	1 5/8	1 5/8	7/32	5.56	7/32	5.56	1 5/8	41.27
13/32	10.32	1/2	12.70	7/8	22.22	1 5/8	1 5/8	7/32	5.56	7/32	5.56	1 5/8	41.27
13/32	10.32	1/2	12.70	29/32	23.02	1 5/8	1 5/8	7/32	5.56	7/32	5.56	1 5/8	41.27
13/32	10.32	1/2	12.70	15/16	23.81	1 5/8	1 5/8	7/32	5.56	7/32	5.56	1 5/8	41.27
13/32	10.32	1/2	12.70	31/32	24.61	1 5/8	1 5/8	7/32	5.56	7/32	5.56	1 5/8	41.27
13/32	10.32	1/2	12.70	1	25.40	1 5/8	1 5/8	7/32	5.56	7/32	5.56	1 5/8	41.27
13/32	10.32	1/2	12.70	1 1/8	28.57	1 5/8	1 5/8	7/32	5.56	7/32	5.56	1 5/8	41.27
13/32	10.32	1/2	12.70	1 1/4	31.75	1 5/8	1 5/8	7/32	5.56	7/32	5.56	1 5/8	41.27
13/32	10.32	1/2	12.70	1 3/8	34.92	1 5/8	1 5/8	7/32	5.56	7/32	5.56	1 5/8	41.27
7/16	11.11	1/2	12.70	21/32	16.67	1 5/8	1 5/8	7/32	5.56	7/32	5.56	1 5/8	41.27
7/16	11.11	1/2	12.70	11/16	17.46	1 5/8	1 5/8	7/32	5.56	7/32	5.56	1 5/8	41.27
7/16	11.11	1/2	12.70	23/32	18.26	1 5/8	1 5/8	7/32	5.56	7/32	5.56	1 5/8	41.27
7/16	11.11	1/2	12.70	3/4	19.05	1 5/8	1 5/8	7/32	5.56	7/32	5.56	1 5/8	41.27
7/16	11.11	1/2	12.70	25/32	19.84	1 5/8	1 5/8	7/32	5.56	7/32	5.56	1 5/8	41.27
7/16	11.11	1/2	12.70	13/16	20.64	1 5/8	1 5/8	7/32	5.56	7/32	5.56	1 5/8	41.27
7/16	11.11	1/2	12.70	27/32	21.43	1 5/8	1 5/8	7/32	5.56	7/32	5.56	1 5/8	41.27
7/16	11.11	1/2	12.70	7/8	22.22	1 5/8	1 5/8	7/32	5.56	7/32	5.56	1 5/8	41.27
7/16	11.11	1/2	12.70	29/32	23.02	1 5/8	1 5/8	7/32	5.56	7/32	5.56	1 5/8	41.27
7/16	11.11	1/2	12.70	15/16	23.81	1 5/8	1 5/8	7/32	5.56	7/32	5.56	1 5/8	41.27
7/16	11.11	1/2	12.70	31/32	24.61	1 5/8	1 5/8	7/32	5.56	7/32	5.56	1 5/8	41.27
7/16	11.11	1/2	12.70	1	25.40	1 5/8	1 5/8	7/32	5.56	7/32	5.56	1 5/8	41.27
7/16	11.11	1/2	12.70	1 1/8	28.57	1 5/8	1 5/8	7/32	5.56	7/32	5.56	1 5/8	41.27
7/16	11.11	1/2	12.70	1 1/4	31.75	1 5/8	1 5/8	7/32	5.56	7/32	5.56	1 5/8	41.27
7/16	11.11	1/2	12.70	1 3/8	34.92	1 5/8	1 5/8	7/32	5.56	7/32	5.56	1 5/8	41.27
15/32	11.91	1/2	12.70	21/32	16.67	1 5/8	1 5/8	7/32	5.56	7/32	5.56	1 5/8	41.27

www.globaltunsteels.com

B		E		D		M	A	L		T		C	
inch	mm	inch	mm	inch	mm	inch	inch	inch	mm	inch	mm	inch	mm
15/32	11.91	1/2	12.70	11/16	17.46	1 5/8	1 5/8	7/32	5.56	7/32	5.56	1 5/8	41.27
15/32	11.91	1/2	12.70	23/32	18.26	1 5/8	1 5/8	7/32	5.56	7/32	5.56	1 5/8	41.27
15/32	11.91	1/2	12.70	3/4	19.05	1 5/8	1 5/8	7/32	5.56	7/32	5.56	1 5/8	41.27
15/32	11.91	1/2	12.70	25/32	19.84	1 5/8	1 5/8	7/32	5.56	7/32	5.56	1 5/8	41.27
15/32	11.91	1/2	12.70	13/16	20.64	1 5/8	1 5/8	7/32	5.56	7/32	5.56	1 5/8	41.27
15/32	11.91	1/2	12.70	27/32	21.43	1 5/8	1 5/8	7/32	5.56	7/32	5.56	1 5/8	41.27
15/32	11.91	1/2	12.70	7/8	22.22	1 5/8	1 5/8	7/32	5.56	7/32	5.56	1 5/8	41.27
15/32	11.91	1/2	12.70	29/32	23.02	1 5/8	1 5/8	7/32	5.56	7/32	5.56	1 5/8	41.27
15/32	11.91	1/2	12.70	15/16	23.81	1 5/8	1 5/8	7/32	5.56	7/32	5.56	1 5/8	41.27
15/32	11.91	1/2	12.70	31/32	24.61	1 5/8	1 5/8	7/32	5.56	7/32	5.56	1 5/8	41.27
15/32	11.91	1/2	12.70	1	25.40	1 5/8	1 5/8	7/32	5.56	7/32	5.56	1 5/8	41.27
15/32	11.91	1/2	12.70	1 1/8	28.57	1 5/8	1 5/8	7/32	5.56	7/32	5.56	1 5/8	41.27
15/32	11.91	1/2	12.70	1 1/4	31.75	1 5/8	1 5/8	7/32	5.56	7/32	5.56	1 5/8	41.27
15/32	11.91	1/2	12.70	1 3/8	34.92	1 5/8	1 5/8	7/32	5.56	7/32	5.56	1 5/8	41.27
1/2	12.70	1/2	12.70	21/32	16.67	1 5/8	1 5/8	7/32	5.56	7/32	5.56	1 5/8	41.27
1/2	12.70	1/2	12.70	11/16	17.46	1 5/8	1 5/8	7/32	5.56	7/32	5.56	1 5/8	41.27
1/2	12.70	1/2	12.70	23/32	18.26	1 5/8	1 5/8	7/32	5.56	7/32	5.56	1 5/8	41.27
1/2	12.70	1/2	12.70	3/4	19.05	1 5/8	1 5/8	7/32	5.56	7/32	5.56	1 5/8	41.27
1/2	12.70	1/2	12.70	25/32	19.84	1 5/8	1 5/8	7/32	5.56	7/32	5.56	1 5/8	41.27
1/2	12.70	1/2	12.70	13/16	20.64	1 5/8	1 5/8	7/32	5.56	7/32	5.56	1 5/8	41.27
1/2	12.70	1/2	12.70	27/32	21.43	1 5/8	1 5/8	7/32	5.56	7/32	5.56	1 5/8	41.27
1/2	12.70	1/2	12.70	7/8	22.22	1 5/8	1 5/8	7/32	5.56	7/32	5.56	1 5/8	41.27
1/2	12.70	1/2	12.70	29/32	23.02	1 5/8	1 5/8	7/32	5.56	7/32	5.56	1 5/8	41.27
1/2	12.70	1/2	12.70	15/16	23.81	1 5/8	1 5/8	7/32	5.56	7/32	5.56	1 5/8	41.27
1/2	12.70	1/2	12.70	31/32	24.61	1 5/8	1 5/8	7/32	5.56	7/32	5.56	1 5/8	41.27
1/2	12.70	1/2	12.70	1	25.40	1 5/8	1 5/8	7/32	5.56	7/32	5.56	1 5/8	41.27
1/2	12.70	1/2	12.70	1 1/8	28.57	1 5/8	1 5/8	7/32	5.56	7/32	5.56	1 5/8	41.27
1/2	12.70	1/2	12.70	1 1/4	31.75	1 5/8	1 5/8	7/32	5.56	7/32	5.56	1 5/8	41.27
1/2	12.70	1/2	12.70	1 3/8	34.92	1 5/8	1 5/8	7/32	5.56	7/32	5.56	1 5/8	41.27
3/16	4.76	3/8	9.52	19/32	15.08	1 5/8	1 5/8	7/32	5.56	7/32	5.56	1 5/8	41.27
3/16	4.76	3/8	9.52	5/8	15.87	1 5/8	1 5/8	7/32	5.56	7/32	5.56	1 5/8	41.27
3/16	4.76	3/8	9.52	21/32	16.67	1 5/8	1 5/8	7/32	5.56	7/32	5.56	1 5/8	41.27
3/16	4.76	3/8	9.52	11/16	17.46	1 5/8	1 5/8	7/32	5.56	7/32	5.56	1 5/8	41.27
3/16	4.76	3/8	9.52	23/32	18.26	1 5/8	1 5/8	7/32	5.56	7/32	5.56	1 5/8	41.27
3/16	4.76	3/8	9.52	3/4	19.05	1 5/8	1 5/8	7/32	5.56	7/32	5.56	1 5/8	41.27
3/16	4.76	3/8	9.52	25/32	19.84	1 5/8	1 5/8	7/32	5.56	7/32	5.56	1 5/8	41.27
3/16	4.76	3/8	9.52	13/16	20.64	1 5/8	1 5/8	7/32	5.56	7/32	5.56	1 5/8	41.27
3/16	4.76	3/8	9.52	27/32	21.43	1 5/8	1 5/8	7/32	5.56	7/32	5.56	1 5/8	41.27
3/16	4.76	3/8	9.52	7/8	22.22	1 5/8	1 5/8	7/32	5.56	7/32	5.56	1 5/8	41.27
3/16	4.76	3/8	9.52	29/32	23.02	1 5/8	1 5/8	7/32	5.56	7/32	5.56	1 5/8	41.27
3/16	4.76	3/8	9.52	15/16	23.81	1 5/8	1 5/8	7/32	5.56	7/32	5.56	1 5/8	41.27
3/16	4.76	3/8	9.52	31/32	24.61	1 5/8	1 5/8	7/32	5.56	7/32	5.56	1 5/8	41.27
3/16	4.76	3/8	9.52	1	25.40	1 5/8	1 5/8	7/32	5.56	7/32	5.56	1 5/8	41.27
3/16	4.76	3/8	9.52	1 1/8	28.57	1 5/8	1 5/8	7/32	5.56	7/32	5.56	1 5/8	41.27
3/16	4.76	3/8	9.52	1 1/4	31.75	1 5/8	1 5/8	7/32	5.56	7/32	5.56	1 5/8	41.27

www.globaltungsteels.com

B		E		D		M	A	L		T		C	
inch	mm	inch	mm	inch	mm	inch	inch	inch	mm	inch	mm	inch	mm
3/16	4.76	3/8	9.52	1 3/8	34.92	1 5/8	1 5/8	7/32	5.56	7/32	5.56	1 5/8	41.27
7/32	5.56	3/8	9.52	19/32	15.08	1 5/8	1 5/8	7/32	5.56	7/32	5.56	1 5/8	41.27
7/32	5.56	3/8	9.52	5/8	15.87	1 5/8	1 5/8	7/32	5.56	7/32	5.56	1 5/8	41.27
7/32	5.56	3/8	9.52	21/32	16.67	1 5/8	1 5/8	7/32	5.56	7/32	5.56	1 5/8	41.27
7/32	5.56	3/8	9.52	11/16	17.46	1 5/8	1 5/8	7/32	5.56	7/32	5.56	1 5/8	41.27
7/32	5.56	3/8	9.52	23/32	18.26	1 5/8	1 5/8	7/32	5.56	7/32	5.56	1 5/8	41.27
7/32	5.56	3/8	9.52	3/4	19.05	1 5/8	1 5/8	7/32	5.56	7/32	5.56	1 5/8	41.27
7/32	5.56	3/8	9.52	25/32	19.84	1 5/8	1 5/8	7/32	5.56	7/32	5.56	1 5/8	41.27
7/32	5.56	3/8	9.52	13/16	20.64	1 5/8	1 5/8	7/32	5.56	7/32	5.56	1 5/8	41.27
7/32	5.56	3/8	9.52	27/32	21.43	1 5/8	1 5/8	7/32	5.56	7/32	5.56	1 5/8	41.27
7/32	5.56	3/8	9.52	7/8	22.22	1 5/8	1 5/8	7/32	5.56	7/32	5.56	1 5/8	41.27
7/32	5.56	3/8	9.52	29/32	23.02	1 5/8	1 5/8	7/32	5.56	7/32	5.56	1 5/8	41.27
7/32	5.56	3/8	9.52	15/16	23.81	1 5/8	1 5/8	7/32	5.56	7/32	5.56	1 5/8	41.27
7/32	5.56	3/8	9.52	31/32	24.61	1 5/8	1 5/8	7/32	5.56	7/32	5.56	1 5/8	41.27
7/32	5.56	3/8	9.52	1	25.40	1 5/8	1 5/8	7/32	5.56	7/32	5.56	1 5/8	41.27
7/32	5.56	3/8	9.52	1 1/8	28.57	1 5/8	1 5/8	7/32	5.56	7/32	5.56	1 5/8	41.27
7/32	5.56	3/8	9.52	1 1/4	31.75	1 5/8	1 5/8	7/32	5.56	7/32	5.56	1 5/8	41.27
7/32	5.56	3/8	9.52	1 3/8	34.92	1 5/8	1 5/8	7/32	5.56	7/32	5.56	1 5/8	41.27
1/4	6.35	3/8	9.52	19/32	15.08	1 5/8	1 5/8	7/32	5.56	7/32	5.56	1 5/8	41.27
1/4	6.35	3/8	9.52	5/8	15.87	1 5/8	1 5/8	7/32	5.56	7/32	5.56	1 5/8	41.27
1/4	6.35	3/8	9.52	21/32	16.67	1 5/8	1 5/8	7/32	5.56	7/32	5.56	1 5/8	41.27
1/4	6.35	3/8	9.52	11/16	17.46	1 5/8	1 5/8	7/32	5.56	7/32	5.56	1 5/8	41.27
1/4	6.35	3/8	9.52	23/32	18.26	1 5/8	1 5/8	7/32	5.56	7/32	5.56	1 5/8	41.27
1/4	6.35	3/8	9.52	3/4	19.05	1 5/8	1 5/8	7/32	5.56	7/32	5.56	1 5/8	41.27
1/4	6.35	3/8	9.52	25/32	19.84	1 5/8	1 5/8	7/32	5.56	7/32	5.56	1 5/8	41.27
1/4	6.35	3/8	9.52	13/16	20.64	1 5/8	1 5/8	7/32	5.56	7/32	5.56	1 5/8	41.27
1/4	6.35	3/8	9.52	27/32	21.43	1 5/8	1 5/8	7/32	5.56	7/32	5.56	1 5/8	41.27
1/4	6.35	3/8	9.52	7/8	22.22	1 5/8	1 5/8	7/32	5.56	7/32	5.56	1 5/8	41.27
1/4	6.35	3/8	9.52	29/32	23.02	1 5/8	1 5/8	7/32	5.56	7/32	5.56	1 5/8	41.27
1/4	6.35	3/8	9.52	15/16	23.81	1 5/8	1 5/8	7/32	5.56	7/32	5.56	1 5/8	41.27
1/4	6.35	3/8	9.52	31/32	24.61	1 5/8	1 5/8	7/32	5.56	7/32	5.56	1 5/8	41.27
1/4	6.35	3/8	9.52	1	25.40	1 5/8	1 5/8	7/32	5.56	7/32	5.56	1 5/8	41.27
1/4	6.35	3/8	9.52	1 1/8	28.57	1 5/8	1 5/8	7/32	5.56	7/32	5.56	1 5/8	41.27
1/4	6.35	3/8	9.52	1 1/4	31.75	1 5/8	1 5/8	7/32	5.56	7/32	5.56	1 5/8	41.27
1/4	6.35	3/8	9.52	1 3/8	34.92	1 5/8	1 5/8	7/32	5.56	7/32	5.56	1 5/8	41.27
9/32	7.14	3/8	9.52	19/32	15.08	1 5/8	1 5/8	7/32	5.56	7/32	5.56	1 5/8	41.27
9/32	7.14	3/8	9.52	5/8	15.87	1 5/8	1 5/8	7/32	5.56	7/32	5.56	1 5/8	41.27
9/32	7.14	3/8	9.52	21/32	16.67	1 5/8	1 5/8	7/32	5.56	7/32	5.56	1 5/8	41.27
9/32	7.14	3/8	9.52	11/16	17.46	1 5/8	1 5/8	7/32	5.56	7/32	5.56	1 5/8	41.27
9/32	7.14	3/8	9.52	23/32	18.26	1 5/8	1 5/8	7/32	5.56	7/32	5.56	1 5/8	41.27
9/32	7.14	3/8	9.52	3/4	19.05	1 5/8	1 5/8	7/32	5.56	7/32	5.56	1 5/8	41.27
9/32	7.14	3/8	9.52	25/32	19.84	1 5/8	1 5/8	7/32	5.56	7/32	5.56	1 5/8	41.27
9/32	7.14	3/8	9.52	13/16	20.64	1 5/8	1 5/8	7/32	5.56	7/32	5.56	1 5/8	41.27
9/32	7.14	3/8	9.52	27/32	21.43	1 5/8	1 5/8	7/32	5.56	7/32	5.56	1 5/8	41.27
9/32	7.14	3/8	9.52	7/8	22.22	1 5/8	1 5/8	7/32	5.56	7/32	5.56	1 5/8	41.27

www.globaltungsten.com

B		E		D		M	A	L		T		C	
inch	mm	inch	mm	inch	mm	inch	inch	inch	mm	inch	mm	inch	mm
9/32	7.14	3/8	9.52	29/32	23.02	1 5/8	1 5/8	7/32	5.56	7/32	5.56	1 5/8	41.27
9/32	7.14	3/8	9.52	15/16	23.81	1 5/8	1 5/8	7/32	5.56	7/32	5.56	1 5/8	41.27
9/32	7.14	3/8	9.52	31/32	24.61	1 5/8	1 5/8	7/32	5.56	7/32	5.56	1 5/8	41.27
9/32	7.14	3/8	9.52	1	25.40	1 5/8	1 5/8	7/32	5.56	7/32	5.56	1 5/8	41.27
9/32	7.14	3/8	9.52	1 1/8	28.57	1 5/8	1 5/8	7/32	5.56	7/32	5.56	1 5/8	41.27
9/32	7.14	3/8	9.52	1 1/4	31.75	1 5/8	1 5/8	7/32	5.56	7/32	5.56	1 5/8	41.27
9/32	7.14	3/8	9.52	1 3/8	34.92	1 5/8	1 5/8	7/32	5.56	7/32	5.56	1 5/8	41.27
5/16	7.94	3/8	9.52	19/32	15.08	1 5/8	1 5/8	7/32	5.56	7/32	5.56	1 5/8	41.27
5/16	7.94	3/8	9.52	5/8	15.87	1 5/8	1 5/8	7/32	5.56	7/32	5.56	1 5/8	41.27
5/16	7.94	3/8	9.52	21/32	16.67	1 5/8	1 5/8	7/32	5.56	7/32	5.56	1 5/8	41.27
5/16	7.94	3/8	9.52	11/16	17.46	1 5/8	1 5/8	7/32	5.56	7/32	5.56	1 5/8	41.27
5/16	7.94	3/8	9.52	23/32	18.26	1 5/8	1 5/8	7/32	5.56	7/32	5.56	1 5/8	41.27
5/16	7.94	3/8	9.52	3/4	19.05	1 5/8	1 5/8	7/32	5.56	7/32	5.56	1 5/8	41.27
5/16	7.94	3/8	9.52	25/32	19.84	1 5/8	1 5/8	7/32	5.56	7/32	5.56	1 5/8	41.27
5/16	7.94	3/8	9.52	13/16	20.64	1 5/8	1 5/8	7/32	5.56	7/32	5.56	1 5/8	41.27
5/16	7.94	3/8	9.52	27/32	21.43	1 5/8	1 5/8	7/32	5.56	7/32	5.56	1 5/8	41.27
5/16	7.94	3/8	9.52	7/8	22.22	1 5/8	1 5/8	7/32	5.56	7/32	5.56	1 5/8	41.27
5/16	7.94	3/8	9.52	29/32	23.02	1 5/8	1 5/8	7/32	5.56	7/32	5.56	1 5/8	41.27
5/16	7.94	3/8	9.52	15/16	23.81	1 5/8	1 5/8	7/32	5.56	7/32	5.56	1 5/8	41.27
5/16	7.94	3/8	9.52	31/32	24.61	1 5/8	1 5/8	7/32	5.56	7/32	5.56	1 5/8	41.27
5/16	7.94	3/8	9.52	1	25.40	1 5/8	1 5/8	7/32	5.56	7/32	5.56	1 5/8	41.27
5/16	7.94	3/8	9.52	1 1/8	28.57	1 5/8	1 5/8	7/32	5.56	7/32	5.56	1 5/8	41.27
5/16	7.94	3/8	9.52	1 1/4	31.75	1 5/8	1 5/8	7/32	5.56	7/32	5.56	1 5/8	41.27
5/16	7.94	3/8	9.52	1 3/8	34.92	1 5/8	1 5/8	7/32	5.56	7/32	5.56	1 5/8	41.27
11/32	8.73	3/8	9.52	19/32	15.08	1 5/8	1 5/8	7/32	5.56	7/32	5.56	1 5/8	41.27
11/32	8.73	3/8	9.52	5/8	15.87	1 5/8	1 5/8	7/32	5.56	7/32	5.56	1 5/8	41.27
11/32	8.73	3/8	9.52	21/32	16.67	1 5/8	1 5/8	7/32	5.56	7/32	5.56	1 5/8	41.27
11/32	8.73	3/8	9.52	11/16	17.46	1 5/8	1 5/8	7/32	5.56	7/32	5.56	1 5/8	41.27
11/32	8.73	3/8	9.52	23/32	18.26	1 5/8	1 5/8	7/32	5.56	7/32	5.56	1 5/8	41.27
11/32	8.73	3/8	9.52	3/4	19.05	1 5/8	1 5/8	7/32	5.56	7/32	5.56	1 5/8	41.27
11/32	8.73	3/8	9.52	25/32	19.84	1 5/8	1 5/8	7/32	5.56	7/32	5.56	1 5/8	41.27
11/32	8.73	3/8	9.52	13/16	20.64	1 5/8	1 5/8	7/32	5.56	7/32	5.56	1 5/8	41.27
11/32	8.73	3/8	9.52	27/32	21.43	1 5/8	1 5/8	7/32	5.56	7/32	5.56	1 5/8	41.27
11/32	8.73	3/8	9.52	7/8	22.22	1 5/8	1 5/8	7/32	5.56	7/32	5.56	1 5/8	41.27
11/32	8.73	3/8	9.52	29/32	23.02	1 5/8	1 5/8	7/32	5.56	7/32	5.56	1 5/8	41.27
11/32	8.73	3/8	9.52	15/16	23.81	1 5/8	1 5/8	7/32	5.56	7/32	5.56	1 5/8	41.27
11/32	8.73	3/8	9.52	31/32	24.61	1 5/8	1 5/8	7/32	5.56	7/32	5.56	1 5/8	41.27
11/32	8.73	3/8	9.52	1	25.40	1 5/8	1 5/8	7/32	5.56	7/32	5.56	1 5/8	41.27
11/32	8.73	3/8	9.52	1 1/8	28.57	1 5/8	1 5/8	7/32	5.56	7/32	5.56	1 5/8	41.27
11/32	8.73	3/8	9.52	1 1/4	31.75	1 5/8	1 5/8	7/32	5.56	7/32	5.56	1 5/8	41.27
11/32	8.73	3/8	9.52	1 3/8	34.92	1 5/8	1 5/8	7/32	5.56	7/32	5.56	1 5/8	41.27
3/8	9.52	3/8	9.52	19/32	15.08	1 5/8	1 5/8	7/32	5.56	7/32	5.56	1 5/8	41.27
3/8	9.52	3/8	9.52	5/8	15.87	1 5/8	1 5/8	7/32	5.56	7/32	5.56	1 5/8	41.27
3/8	9.52	3/8	9.52	21/32	16.67	1 5/8	1 5/8	7/32	5.56	7/32	5.56	1 5/8	41.27
3/8	9.52	3/8	9.52	11/16	17.46	1 5/8	1 5/8	7/32	5.56	7/32	5.56	1 5/8	41.27

www.globaltungsteels.com

B		E		D		M	A	L		T		C	
inch	mm	inch	mm	inch	mm	inch	inch	inch	mm	inch	mm	inch	mm
3/8	9.52	3/8	9.52	23/32	18.26	1 5/8	1 5/8	7/32	5.56	7/32	5.56	1 5/8	41.27
3/8	9.52	3/8	9.52	3/4	19.05	1 5/8	1 5/8	7/32	5.56	7/32	5.56	1 5/8	41.27
3/8	9.52	3/8	9.52	25/32	19.84	1 5/8	1 5/8	7/32	5.56	7/32	5.56	1 5/8	41.27
3/8	9.52	3/8	9.52	13/16	20.64	1 5/8	1 5/8	7/32	5.56	7/32	5.56	1 5/8	41.27
3/8	9.52	3/8	9.52	27/32	21.43	1 5/8	1 5/8	7/32	5.56	7/32	5.56	1 5/8	41.27
3/8	9.52	3/8	9.52	7/8	22.22	1 5/8	1 5/8	7/32	5.56	7/32	5.56	1 5/8	41.27
3/8	9.52	3/8	9.52	29/32	23.02	1 5/8	1 5/8	7/32	5.56	7/32	5.56	1 5/8	41.27
3/8	9.52	3/8	9.52	15/16	23.81	1 5/8	1 5/8	7/32	5.56	7/32	5.56	1 5/8	41.27
3/8	9.52	3/8	9.52	31/32	24.61	1 5/8	1 5/8	7/32	5.56	7/32	5.56	1 5/8	41.27
3/8	9.52	3/8	9.52	1	25.40	1 5/8	1 5/8	7/32	5.56	7/32	5.56	1 5/8	41.27
3/8	9.52	3/8	9.52	1 1/8	28.57	1 5/8	1 5/8	7/32	5.56	7/32	5.56	1 5/8	41.27
3/8	9.52	3/8	9.52	1 1/4	31.75	1 5/8	1 5/8	7/32	5.56	7/32	5.56	1 5/8	41.27
3/8	9.52	3/8	9.52	1 3/8	34.92	1 5/8	1 5/8	7/32	5.56	7/32	5.56	1 5/8	41.27
3/16	4.76	1	25.40	1 1/4	31.75	1 1/2	1 1/2	7/32	5.56	7/32	5.56	1 1/2	38.10
7/32	5.56	1	25.40	1 1/4	31.75	1 1/2	1 1/2	7/32	5.56	7/32	5.56	1 1/2	38.10
1/4	6.35	1	25.40	1 1/4	31.75	1 1/2	1 1/2	7/32	5.56	7/32	5.56	1 1/2	38.10
9/32	7.14	1	25.40	1 1/4	31.75	1 1/2	1 1/2	7/32	5.56	7/32	5.56	1 1/2	38.10
5/16	7.94	1	25.40	1 1/4	31.75	1 1/2	1 1/2	7/32	5.56	7/32	5.56	1 1/2	38.10
11/32	8.73	1	25.40	1 1/4	31.75	1 1/2	1 1/2	7/32	5.56	7/32	5.56	1 1/2	38.10
3/8	9.52	1	25.40	1 1/4	31.75	1 1/2	1 1/2	7/32	5.56	7/32	5.56	1 1/2	38.10
13/32	10.32	1	25.40	1 1/4	31.75	1 1/2	1 1/2	7/32	5.56	7/32	5.56	1 1/2	38.10
7/16	11.11	1	25.40	1 1/4	31.75	1 1/2	1 1/2	7/32	5.56	7/32	5.56	1 1/2	38.10
15/32	11.91	1	25.40	1 1/4	31.75	1 1/2	1 1/2	7/32	5.56	7/32	5.56	1 1/2	38.10
1/2	12.70	1	25.40	1 1/4	31.75	1 1/2	1 1/2	7/32	5.56	7/32	5.56	1 1/2	38.10
17/32	13.49	1	25.40	1 1/4	31.75	1 1/2	1 1/2	7/32	5.56	7/32	5.56	1 1/2	38.10
9/16	14.29	1	25.40	1 1/4	31.75	1 1/2	1 1/2	7/32	5.56	7/32	5.56	1 1/2	38.10
19/32	15.08	1	25.40	1 1/4	31.75	1 1/2	1 1/2	7/32	5.56	7/32	5.56	1 1/2	38.10
5/8	15.87	1	25.40	1 1/4	31.75	1 1/2	1 1/2	7/32	5.56	7/32	5.56	1 1/2	38.10
21/32	16.67	1	25.40	1 1/4	31.75	1 1/2	1 1/2	7/32	5.56	7/32	5.56	1 1/2	38.10
11/16	17.46	1	25.40	1 1/4	31.75	1 1/2	1 1/2	7/32	5.56	7/32	5.56	1 1/2	38.10
23/32	18.26	1	25.40	1 1/4	31.75	1 1/2	1 1/2	7/32	5.56	7/32	5.56	1 1/2	38.10
3/4	19.05	1	25.40	1 1/4	31.75	1 1/2	1 1/2	7/32	5.56	7/32	5.56	1 1/2	38.10
25/32	19.84	1	25.40	1 1/4	31.75	1 1/2	1 1/2	7/32	5.56	7/32	5.56	1 1/2	38.10
13/16	20.64	1	25.40	1 1/4	31.75	1 1/2	1 1/2	7/32	5.56	7/32	5.56	1 1/2	38.10
27/32	21.43	1	25.40	1 1/4	31.75	1 1/2	1 1/2	7/32	5.56	7/32	5.56	1 1/2	38.10
7/8	22.22	1	25.40	1 1/4	31.75	1 1/2	1 1/2	7/32	5.56	7/32	5.56	1 1/2	38.10
29/32	23.02	1	25.40	1 1/4	31.75	1 1/2	1 1/2	7/32	5.56	7/32	5.56	1 1/2	38.10
15/16	23.81	1	25.40	1 1/4	31.75	1 1/2	1 1/2	7/32	5.56	7/32	5.56	1 1/2	38.10
31/32	24.61	1	25.40	1 1/4	31.75	1 1/2	1 1/2	7/32	5.56	7/32	5.56	1 1/2	38.10
1	25.40	1	25.40	1 1/4	31.75	1 1/2	1 1/2	7/32	5.56	7/32	5.56	1 1/2	38.10
3/16	4.76	7/8	22.22	1 1/8	28.57	1 1/2	1 1/2	7/32	5.56	7/32	5.56	1 1/2	38.10
7/32	5.56	7/8	22.22	1 1/8	28.57	1 1/2	1 1/2	7/32	5.56	7/32	5.56	1 1/2	38.10
1/4	6.35	7/8	22.22	1 1/8	28.57	1 1/2	1 1/2	7/32	5.56	7/32	5.56	1 1/2	38.10
9/32	7.14	7/8	22.22	1 1/8	28.57	1 1/2	1 1/2	7/32	5.56	7/32	5.56	1 1/2	38.10
5/16	7.94	7/8	22.22	1 1/8	28.57	1 1/2	1 1/2	7/32	5.56	7/32	5.56	1 1/2	38.10

www.globaltungsteels.com

B		E		D		M	A	L		T		C	
inch	mm	inch	mm	inch	mm	inch	inch	inch	mm	inch	mm	inch	mm
11/32	8.73	7/8	22.22	1 1/8	28.57	1 1/2	1 1/2	7/32	5.56	7/32	5.56	1 1/2	38.10
3/8	9.52	7/8	22.22	1 1/8	28.57	1 1/2	1 1/2	7/32	5.56	7/32	5.56	1 1/2	38.10
13/32	10.32	7/8	22.22	1 1/8	28.57	1 1/2	1 1/2	7/32	5.56	7/32	5.56	1 1/2	38.10
7/16	11.11	7/8	22.22	1 1/8	28.57	1 1/2	1 1/2	7/32	5.56	7/32	5.56	1 1/2	38.10
15/32	11.91	7/8	22.22	1 1/8	28.57	1 1/2	1 1/2	7/32	5.56	7/32	5.56	1 1/2	38.10
1/2	12.70	7/8	22.22	1 1/8	28.57	1 1/2	1 1/2	7/32	5.56	7/32	5.56	1 1/2	38.10
17/32	13.49	7/8	22.22	1 1/8	28.57	1 1/2	1 1/2	7/32	5.56	7/32	5.56	1 1/2	38.10
9/16	14.29	7/8	22.22	1 1/8	28.57	1 1/2	1 1/2	7/32	5.56	7/32	5.56	1 1/2	38.10
19/32	15.08	7/8	22.22	1 1/8	28.57	1 1/2	1 1/2	7/32	5.56	7/32	5.56	1 1/2	38.10
5/8	15.87	7/8	22.22	1 1/8	28.57	1 1/2	1 1/2	7/32	5.56	7/32	5.56	1 1/2	38.10
21/32	16.67	7/8	22.22	1 1/8	28.57	1 1/2	1 1/2	7/32	5.56	7/32	5.56	1 1/2	38.10
11/16	17.46	7/8	22.22	1 1/8	28.57	1 1/2	1 1/2	7/32	5.56	7/32	5.56	1 1/2	38.10
23/32	18.26	7/8	22.22	1 1/8	28.57	1 1/2	1 1/2	7/32	5.56	7/32	5.56	1 1/2	38.10
3/4	19.05	7/8	22.22	1 1/8	28.57	1 1/2	1 1/2	7/32	5.56	7/32	5.56	1 1/2	38.10
25/32	19.84	7/8	22.22	1 1/8	28.57	1 1/2	1 1/2	7/32	5.56	7/32	5.56	1 1/2	38.10
13/16	20.64	7/8	22.22	1 1/8	28.57	1 1/2	1 1/2	7/32	5.56	7/32	5.56	1 1/2	38.10
27/32	21.43	7/8	22.22	1 1/8	28.57	1 1/2	1 1/2	7/32	5.56	7/32	5.56	1 1/2	38.10
7/8	22.22	7/8	22.22	1 1/8	28.57	1 1/2	1 1/2	7/32	5.56	7/32	5.56	1 1/2	38.10
3/16	4.76	7/8	22.22	1 1/4	31.75	1 1/2	1 1/2	7/32	5.56	7/32	5.56	1 1/2	38.10
7/32	5.56	7/8	22.22	1 1/4	31.75	1 1/2	1 1/2	7/32	5.56	7/32	5.56	1 1/2	38.10
1/4	6.35	7/8	22.22	1 1/4	31.75	1 1/2	1 1/2	7/32	5.56	7/32	5.56	1 1/2	38.10
9/32	7.14	7/8	22.22	1 1/4	31.75	1 1/2	1 1/2	7/32	5.56	7/32	5.56	1 1/2	38.10
5/16	7.94	7/8	22.22	1 1/4	31.75	1 1/2	1 1/2	7/32	5.56	7/32	5.56	1 1/2	38.10
11/32	8.73	7/8	22.22	1 1/4	31.75	1 1/2	1 1/2	7/32	5.56	7/32	5.56	1 1/2	38.10
3/8	9.52	7/8	22.22	1 1/4	31.75	1 1/2	1 1/2	7/32	5.56	7/32	5.56	1 1/2	38.10
13/32	10.32	7/8	22.22	1 1/4	31.75	1 1/2	1 1/2	7/32	5.56	7/32	5.56	1 1/2	38.10
7/16	11.11	7/8	22.22	1 1/4	31.75	1 1/2	1 1/2	7/32	5.56	7/32	5.56	1 1/2	38.10
15/32	11.91	7/8	22.22	1 1/4	31.75	1 1/2	1 1/2	7/32	5.56	7/32	5.56	1 1/2	38.10
1/2	12.70	7/8	22.22	1 1/4	31.75	1 1/2	1 1/2	7/32	5.56	7/32	5.56	1 1/2	38.10
17/32	13.49	7/8	22.22	1 1/4	31.75	1 1/2	1 1/2	7/32	5.56	7/32	5.56	1 1/2	38.10
9/16	14.29	7/8	22.22	1 1/4	31.75	1 1/2	1 1/2	7/32	5.56	7/32	5.56	1 1/2	38.10
19/32	15.08	7/8	22.22	1 1/4	31.75	1 1/2	1 1/2	7/32	5.56	7/32	5.56	1 1/2	38.10
5/8	15.87	7/8	22.22	1 1/4	31.75	1 1/2	1 1/2	7/32	5.56	7/32	5.56	1 1/2	38.10
21/32	16.67	7/8	22.22	1 1/4	31.75	1 1/2	1 1/2	7/32	5.56	7/32	5.56	1 1/2	38.10
11/16	17.46	7/8	22.22	1 1/4	31.75	1 1/2	1 1/2	7/32	5.56	7/32	5.56	1 1/2	38.10
23/32	18.26	7/8	22.22	1 1/4	31.75	1 1/2	1 1/2	7/32	5.56	7/32	5.56	1 1/2	38.10
3/4	19.05	7/8	22.22	1 1/4	31.75	1 1/2	1 1/2	7/32	5.56	7/32	5.56	1 1/2	38.10
25/32	19.84	7/8	22.22	1 1/4	31.75	1 1/2	1 1/2	7/32	5.56	7/32	5.56	1 1/2	38.10
13/16	20.64	7/8	22.22	1 1/4	31.75	1 1/2	1 1/2	7/32	5.56	7/32	5.56	1 1/2	38.10
27/32	21.43	7/8	22.22	1 1/4	31.75	1 1/2	1 1/2	7/32	5.56	7/32	5.56	1 1/2	38.10
7/8	22.22	7/8	22.22	1 1/4	31.75	1 1/2	1 1/2	7/32	5.56	7/32	5.56	1 1/2	38.10
3/16	4.76	3/4	19.05	29/32	23.02	1 1/2	1 1/2	7/32	5.56	7/32	5.56	1 1/2	38.10
7/32	5.56	3/4	19.05	29/32	23.02	1 1/2	1 1/2	7/32	5.56	7/32	5.56	1 1/2	38.10
1/4	6.35	3/4	19.05	29/32	23.02	1 1/2	1 1/2	7/32	5.56	7/32	5.56	1 1/2	38.10
9/32	7.14	3/4	19.05	29/32	23.02	1 1/2	1 1/2	7/32	5.56	7/32	5.56	1 1/2	38.10

www.globaltungsten.com

B		E		D		M	A	L		T		C	
inch	mm	inch	mm	inch	mm	inch	inch	inch	mm	inch	mm	inch	mm
5/16	7.94	3/4	19.05	29/32	23.02	1 1/2	1 1/2	7/32	5.56	7/32	5.56	1 1/2	38.10
11/32	8.73	3/4	19.05	29/32	23.02	1 1/2	1 1/2	7/32	5.56	7/32	5.56	1 1/2	38.10
3/8	9.52	3/4	19.05	29/32	23.02	1 1/2	1 1/2	7/32	5.56	7/32	5.56	1 1/2	38.10
13/32	10.32	3/4	19.05	29/32	23.02	1 1/2	1 1/2	7/32	5.56	7/32	5.56	1 1/2	38.10
7/16	11.11	3/4	19.05	29/32	23.02	1 1/2	1 1/2	7/32	5.56	7/32	5.56	1 1/2	38.10
15/32	11.91	3/4	19.05	29/32	23.02	1 1/2	1 1/2	7/32	5.56	7/32	5.56	1 1/2	38.10
1/2	12.70	3/4	19.05	29/32	23.02	1 1/2	1 1/2	7/32	5.56	7/32	5.56	1 1/2	38.10
17/32	13.49	3/4	19.05	29/32	23.02	1 1/2	1 1/2	7/32	5.56	7/32	5.56	1 1/2	38.10
9/16	14.29	3/4	19.05	29/32	23.02	1 1/2	1 1/2	7/32	5.56	7/32	5.56	1 1/2	38.10
19/32	15.08	3/4	19.05	29/32	23.02	1 1/2	1 1/2	7/32	5.56	7/32	5.56	1 1/2	38.10
5/8	15.87	3/4	19.05	29/32	23.02	1 1/2	1 1/2	7/32	5.56	7/32	5.56	1 1/2	38.10
21/32	16.67	3/4	19.05	29/32	23.02	1 1/2	1 1/2	7/32	5.56	7/32	5.56	1 1/2	38.10
11/16	17.46	3/4	19.05	29/32	23.02	1 1/2	1 1/2	7/32	5.56	7/32	5.56	1 1/2	38.10
23/32	18.26	3/4	19.05	29/32	23.02	1 1/2	1 1/2	7/32	5.56	7/32	5.56	1 1/2	38.10
3/4	19.05	3/4	19.05	29/32	23.02	1 1/2	1 1/2	7/32	5.56	7/32	5.56	1 1/2	38.10
3/16	4.76	3/4	19.05	15/16	23.81	1 1/2	1 1/2	7/32	5.56	7/32	5.56	1 1/2	38.10
7/32	5.56	3/4	19.05	15/16	23.81	1 1/2	1 1/2	7/32	5.56	7/32	5.56	1 1/2	38.10
1/4	6.35	3/4	19.05	15/16	23.81	1 1/2	1 1/2	7/32	5.56	7/32	5.56	1 1/2	38.10
9/32	7.14	3/4	19.05	15/16	23.81	1 1/2	1 1/2	7/32	5.56	7/32	5.56	1 1/2	38.10
5/16	7.94	3/4	19.05	15/16	23.81	1 1/2	1 1/2	7/32	5.56	7/32	5.56	1 1/2	38.10
11/32	8.73	3/4	19.05	15/16	23.81	1 1/2	1 1/2	7/32	5.56	7/32	5.56	1 1/2	38.10
3/8	9.52	3/4	19.05	15/16	23.81	1 1/2	1 1/2	7/32	5.56	7/32	5.56	1 1/2	38.10
13/32	10.32	3/4	19.05	15/16	23.81	1 1/2	1 1/2	7/32	5.56	7/32	5.56	1 1/2	38.10
7/16	11.11	3/4	19.05	15/16	23.81	1 1/2	1 1/2	7/32	5.56	7/32	5.56	1 1/2	38.10
15/32	11.91	3/4	19.05	15/16	23.81	1 1/2	1 1/2	7/32	5.56	7/32	5.56	1 1/2	38.10
1/2	12.70	3/4	19.05	15/16	23.81	1 1/2	1 1/2	7/32	5.56	7/32	5.56	1 1/2	38.10
17/32	13.49	3/4	19.05	15/16	23.81	1 1/2	1 1/2	7/32	5.56	7/32	5.56	1 1/2	38.10
9/16	14.29	3/4	19.05	15/16	23.81	1 1/2	1 1/2	7/32	5.56	7/32	5.56	1 1/2	38.10
19/32	15.08	3/4	19.05	15/16	23.81	1 1/2	1 1/2	7/32	5.56	7/32	5.56	1 1/2	38.10
5/8	15.87	3/4	19.05	15/16	23.81	1 1/2	1 1/2	7/32	5.56	7/32	5.56	1 1/2	38.10
21/32	16.67	3/4	19.05	15/16	23.81	1 1/2	1 1/2	7/32	5.56	7/32	5.56	1 1/2	38.10
11/16	17.46	3/4	19.05	15/16	23.81	1 1/2	1 1/2	7/32	5.56	7/32	5.56	1 1/2	38.10
23/32	18.26	3/4	19.05	15/16	23.81	1 1/2	1 1/2	7/32	5.56	7/32	5.56	1 1/2	38.10
3/4	19.05	3/4	19.05	15/16	23.81	1 1/2	1 1/2	7/32	5.56	7/32	5.56	1 1/2	38.10
3/16	4.76	3/4	19.05	31/32	24.61	1 1/2	1 1/2	7/32	5.56	7/32	5.56	1 1/2	38.10
7/32	5.56	3/4	19.05	31/32	24.61	1 1/2	1 1/2	7/32	5.56	7/32	5.56	1 1/2	38.10
1/4	6.35	3/4	19.05	31/32	24.61	1 1/2	1 1/2	7/32	5.56	7/32	5.56	1 1/2	38.10
9/32	7.14	3/4	19.05	31/32	24.61	1 1/2	1 1/2	7/32	5.56	7/32	5.56	1 1/2	38.10
5/16	7.94	3/4	19.05	31/32	24.61	1 1/2	1 1/2	7/32	5.56	7/32	5.56	1 1/2	38.10
11/32	8.73	3/4	19.05	31/32	24.61	1 1/2	1 1/2	7/32	5.56	7/32	5.56	1 1/2	38.10
3/8	9.52	3/4	19.05	31/32	24.61	1 1/2	1 1/2	7/32	5.56	7/32	5.56	1 1/2	38.10
13/32	10.32	3/4	19.05	31/32	24.61	1 1/2	1 1/2	7/32	5.56	7/32	5.56	1 1/2	38.10
7/16	11.11	3/4	19.05	31/32	24.61	1 1/2	1 1/2	7/32	5.56	7/32	5.56	1 1/2	38.10
15/32	11.91	3/4	19.05	31/32	24.61	1 1/2	1 1/2	7/32	5.56	7/32	5.56	1 1/2	38.10
1/2	12.70	3/4	19.05	31/32	24.61	1 1/2	1 1/2	7/32	5.56	7/32	5.56	1 1/2	38.10

www.globaltungsten.com

B		E		D		M	A	L		T		C	
inch	mm	inch	mm	inch	mm	inch	inch	inch	mm	inch	mm	inch	mm
17/32	13.49	3/4	19.05	31/32	24.61	1 1/2	1 1/2	7/32	5.56	7/32	5.56	1 1/2	38.10
9/16	14.29	3/4	19.05	31/32	24.61	1 1/2	1 1/2	7/32	5.56	7/32	5.56	1 1/2	38.10
19/32	15.08	3/4	19.05	31/32	24.61	1 1/2	1 1/2	7/32	5.56	7/32	5.56	1 1/2	38.10
5/8	15.87	3/4	19.05	31/32	24.61	1 1/2	1 1/2	7/32	5.56	7/32	5.56	1 1/2	38.10
21/32	16.67	3/4	19.05	31/32	24.61	1 1/2	1 1/2	7/32	5.56	7/32	5.56	1 1/2	38.10
11/16	17.46	3/4	19.05	31/32	24.61	1 1/2	1 1/2	7/32	5.56	7/32	5.56	1 1/2	38.10
23/32	18.26	3/4	19.05	31/32	24.61	1 1/2	1 1/2	7/32	5.56	7/32	5.56	1 1/2	38.10
3/4	19.05	3/4	19.05	31/32	24.61	1 1/2	1 1/2	7/32	5.56	7/32	5.56	1 1/2	38.10
3/16	4.76	3/4	19.05	1	25.40	1 1/2	1 1/2	7/32	5.56	7/32	5.56	1 1/2	38.10
7/32	5.56	3/4	19.05	1	25.40	1 1/2	1 1/2	7/32	5.56	7/32	5.56	1 1/2	38.10
1/4	6.35	3/4	19.05	1	25.40	1 1/2	1 1/2	7/32	5.56	7/32	5.56	1 1/2	38.10
9/32	7.14	3/4	19.05	1	25.40	1 1/2	1 1/2	7/32	5.56	7/32	5.56	1 1/2	38.10
5/16	7.94	3/4	19.05	1	25.40	1 1/2	1 1/2	7/32	5.56	7/32	5.56	1 1/2	38.10
11/32	8.73	3/4	19.05	1	25.40	1 1/2	1 1/2	7/32	5.56	7/32	5.56	1 1/2	38.10
3/8	9.52	3/4	19.05	1	25.40	1 1/2	1 1/2	7/32	5.56	7/32	5.56	1 1/2	38.10
13/32	10.32	3/4	19.05	1	25.40	1 1/2	1 1/2	7/32	5.56	7/32	5.56	1 1/2	38.10
7/16	11.11	3/4	19.05	1	25.40	1 1/2	1 1/2	7/32	5.56	7/32	5.56	1 1/2	38.10
15/32	11.91	3/4	19.05	1	25.40	1 1/2	1 1/2	7/32	5.56	7/32	5.56	1 1/2	38.10
1/2	12.70	3/4	19.05	1	25.40	1 1/2	1 1/2	7/32	5.56	7/32	5.56	1 1/2	38.10
17/32	13.49	3/4	19.05	1	25.40	1 1/2	1 1/2	7/32	5.56	7/32	5.56	1 1/2	38.10
9/16	14.29	3/4	19.05	1	25.40	1 1/2	1 1/2	7/32	5.56	7/32	5.56	1 1/2	38.10
19/32	15.08	3/4	19.05	1	25.40	1 1/2	1 1/2	7/32	5.56	7/32	5.56	1 1/2	38.10
5/8	15.87	3/4	19.05	1	25.40	1 1/2	1 1/2	7/32	5.56	7/32	5.56	1 1/2	38.10
21/32	16.67	3/4	19.05	1	25.40	1 1/2	1 1/2	7/32	5.56	7/32	5.56	1 1/2	38.10
11/16	17.46	3/4	19.05	1	25.40	1 1/2	1 1/2	7/32	5.56	7/32	5.56	1 1/2	38.10
23/32	18.26	3/4	19.05	1	25.40	1 1/2	1 1/2	7/32	5.56	7/32	5.56	1 1/2	38.10
3/4	19.05	3/4	19.05	1	25.40	1 1/2	1 1/2	7/32	5.56	7/32	5.56	1 1/2	38.10
3/16	4.76	3/4	19.05	1 1/8	28.57	1 1/2	1 1/2	7/32	5.56	7/32	5.56	1 1/2	38.10
7/32	5.56	3/4	19.05	1 1/8	28.57	1 1/2	1 1/2	7/32	5.56	7/32	5.56	1 1/2	38.10
1/4	6.35	3/4	19.05	1 1/8	28.57	1 1/2	1 1/2	7/32	5.56	7/32	5.56	1 1/2	38.10
9/32	7.14	3/4	19.05	1 1/8	28.57	1 1/2	1 1/2	7/32	5.56	7/32	5.56	1 1/2	38.10
5/16	7.94	3/4	19.05	1 1/8	28.57	1 1/2	1 1/2	7/32	5.56	7/32	5.56	1 1/2	38.10
11/32	8.73	3/4	19.05	1 1/8	28.57	1 1/2	1 1/2	7/32	5.56	7/32	5.56	1 1/2	38.10
3/8	9.52	3/4	19.05	1 1/8	28.57	1 1/2	1 1/2	7/32	5.56	7/32	5.56	1 1/2	38.10
13/32	10.32	3/4	19.05	1 1/8	28.57	1 1/2	1 1/2	7/32	5.56	7/32	5.56	1 1/2	38.10
7/16	11.11	3/4	19.05	1 1/8	28.57	1 1/2	1 1/2	7/32	5.56	7/32	5.56	1 1/2	38.10
15/32	11.91	3/4	19.05	1 1/8	28.57	1 1/2	1 1/2	7/32	5.56	7/32	5.56	1 1/2	38.10
1/2	12.70	3/4	19.05	1 1/8	28.57	1 1/2	1 1/2	7/32	5.56	7/32	5.56	1 1/2	38.10
17/32	13.49	3/4	19.05	1 1/8	28.57	1 1/2	1 1/2	7/32	5.56	7/32	5.56	1 1/2	38.10
9/16	14.29	3/4	19.05	1 1/8	28.57	1 1/2	1 1/2	7/32	5.56	7/32	5.56	1 1/2	38.10
19/32	15.08	3/4	19.05	1 1/8	28.57	1 1/2	1 1/2	7/32	5.56	7/32	5.56	1 1/2	38.10
5/8	15.87	3/4	19.05	1 1/8	28.57	1 1/2	1 1/2	7/32	5.56	7/32	5.56	1 1/2	38.10
21/32	16.67	3/4	19.05	1 1/8	28.57	1 1/2	1 1/2	7/32	5.56	7/32	5.56	1 1/2	38.10
11/16	17.46	3/4	19.05	1 1/8	28.57	1 1/2	1 1/2	7/32	5.56	7/32	5.56	1 1/2	38.10
23/32	18.26	3/4	19.05	1 1/8	28.57	1 1/2	1 1/2	7/32	5.56	7/32	5.56	1 1/2	38.10

www.globaltungsters.com

B		E		D		M	A	L		T		C	
inch	mm	inch	mm	inch	mm	inch	inch	inch	mm	inch	mm	inch	mm
3/4	19.05	3/4	19.05	1 1/8	28.57	1 1/2	1 1/2	7/32	5.56	7/32	5.56	1 1/2	38.10
3/16	4.76	3/4	19.05	1 1/4	31.75	1 1/2	1 1/2	7/32	5.56	7/32	5.56	1 1/2	38.10
7/32	5.56	3/4	19.05	1 1/4	31.75	1 1/2	1 1/2	7/32	5.56	7/32	5.56	1 1/2	38.10
1/4	6.35	3/4	19.05	1 1/4	31.75	1 1/2	1 1/2	7/32	5.56	7/32	5.56	1 1/2	38.10
9/32	7.14	3/4	19.05	1 1/4	31.75	1 1/2	1 1/2	7/32	5.56	7/32	5.56	1 1/2	38.10
5/16	7.94	3/4	19.05	1 1/4	31.75	1 1/2	1 1/2	7/32	5.56	7/32	5.56	1 1/2	38.10
11/32	8.73	3/4	19.05	1 1/4	31.75	1 1/2	1 1/2	7/32	5.56	7/32	5.56	1 1/2	38.10
3/8	9.52	3/4	19.05	1 1/4	31.75	1 1/2	1 1/2	7/32	5.56	7/32	5.56	1 1/2	38.10
13/32	10.32	3/4	19.05	1 1/4	31.75	1 1/2	1 1/2	7/32	5.56	7/32	5.56	1 1/2	38.10
7/16	11.11	3/4	19.05	1 1/4	31.75	1 1/2	1 1/2	7/32	5.56	7/32	5.56	1 1/2	38.10
15/32	11.91	3/4	19.05	1 1/4	31.75	1 1/2	1 1/2	7/32	5.56	7/32	5.56	1 1/2	38.10
1/2	12.70	3/4	19.05	1 1/4	31.75	1 1/2	1 1/2	7/32	5.56	7/32	5.56	1 1/2	38.10
17/32	13.49	3/4	19.05	1 1/4	31.75	1 1/2	1 1/2	7/32	5.56	7/32	5.56	1 1/2	38.10
9/16	14.29	3/4	19.05	1 1/4	31.75	1 1/2	1 1/2	7/32	5.56	7/32	5.56	1 1/2	38.10
19/32	15.08	3/4	19.05	1 1/4	31.75	1 1/2	1 1/2	7/32	5.56	7/32	5.56	1 1/2	38.10
5/8	15.87	3/4	19.05	1 1/4	31.75	1 1/2	1 1/2	7/32	5.56	7/32	5.56	1 1/2	38.10
21/32	16.67	3/4	19.05	1 1/4	31.75	1 1/2	1 1/2	7/32	5.56	7/32	5.56	1 1/2	38.10
11/16	17.46	3/4	19.05	1 1/4	31.75	1 1/2	1 1/2	7/32	5.56	7/32	5.56	1 1/2	38.10
23/32	18.26	3/4	19.05	1 1/4	31.75	1 1/2	1 1/2	7/32	5.56	7/32	5.56	1 1/2	38.10
3/4	19.05	3/4	19.05	1 1/4	31.75	1 1/2	1 1/2	7/32	5.56	7/32	5.56	1 1/2	38.10
3/16	4.76	5/8	15.87	25/32	19.84	1 1/2	1 1/2	7/32	5.56	7/32	5.56	1 1/2	38.10
3/16	4.76	5/8	15.87	13/16	20.64	1 1/2	1 1/2	7/32	5.56	7/32	5.56	1 1/2	38.10
3/16	4.76	5/8	15.87	27/32	21.43	1 1/2	1 1/2	7/32	5.56	7/32	5.56	1 1/2	38.10
3/16	4.76	5/8	15.87	7/8	22.22	1 1/2	1 1/2	7/32	5.56	7/32	5.56	1 1/2	38.10
3/16	4.76	5/8	15.87	29/32	23.02	1 1/2	1 1/2	7/32	5.56	7/32	5.56	1 1/2	38.10
3/16	4.76	5/8	15.87	15/16	23.81	1 1/2	1 1/2	7/32	5.56	7/32	5.56	1 1/2	38.10
3/16	4.76	5/8	15.87	31/32	24.61	1 1/2	1 1/2	7/32	5.56	7/32	5.56	1 1/2	38.10
3/16	4.76	5/8	15.87	1	25.40	1 1/2	1 1/2	7/32	5.56	7/32	5.56	1 1/2	38.10
3/16	4.76	5/8	15.87	1 1/8	28.57	1 1/2	1 1/2	7/32	5.56	7/32	5.56	1 1/2	38.10
3/16	4.76	5/8	15.87	1 1/4	31.75	1 1/2	1 1/2	7/32	5.56	7/32	5.56	1 1/2	38.10
7/32	5.56	5/8	15.87	25/32	19.84	1 1/2	1 1/2	7/32	5.56	7/32	5.56	1 1/2	38.10
7/32	5.56	5/8	15.87	13/16	20.64	1 1/2	1 1/2	7/32	5.56	7/32	5.56	1 1/2	38.10
7/32	5.56	5/8	15.87	27/32	21.43	1 1/2	1 1/2	7/32	5.56	7/32	5.56	1 1/2	38.10
7/32	5.56	5/8	15.87	7/8	22.22	1 1/2	1 1/2	7/32	5.56	7/32	5.56	1 1/2	38.10
7/32	5.56	5/8	15.87	29/32	23.02	1 1/2	1 1/2	7/32	5.56	7/32	5.56	1 1/2	38.10
7/32	5.56	5/8	15.87	15/16	23.81	1 1/2	1 1/2	7/32	5.56	7/32	5.56	1 1/2	38.10
7/32	5.56	5/8	15.87	31/32	24.61	1 1/2	1 1/2	7/32	5.56	7/32	5.56	1 1/2	38.10
7/32	5.56	5/8	15.87	1	25.40	1 1/2	1 1/2	7/32	5.56	7/32	5.56	1 1/2	38.10
7/32	5.56	5/8	15.87	1 1/8	28.57	1 1/2	1 1/2	7/32	5.56	7/32	5.56	1 1/2	38.10
7/32	5.56	5/8	15.87	1 1/4	31.75	1 1/2	1 1/2	7/32	5.56	7/32	5.56	1 1/2	38.10
1/4	6.35	5/8	15.87	25/32	19.84	1 1/2	1 1/2	7/32	5.56	7/32	5.56	1 1/2	38.10
1/4	6.35	5/8	15.87	13/16	20.64	1 1/2	1 1/2	7/32	5.56	7/32	5.56	1 1/2	38.10
1/4	6.35	5/8	15.87	27/32	21.43	1 1/2	1 1/2	7/32	5.56	7/32	5.56	1 1/2	38.10
1/4	6.35	5/8	15.87	7/8	22.22	1 1/2	1 1/2	7/32	5.56	7/32	5.56	1 1/2	38.10
1/4	6.35	5/8	15.87	29/32	23.02	1 1/2	1 1/2	7/32	5.56	7/32	5.56	1 1/2	38.10

www.globaltungsten.com

B		E		D		M	A	L		T		C	
inch	mm	inch	mm	inch	mm	inch	inch	inch	mm	inch	mm	inch	mm
1/4	6.35	5/8	15.87	15/16	23.81	1 1/2	1 1/2	7/32	5.56	7/32	5.56	1 1/2	38.10
1/4	6.35	5/8	15.87	31/32	24.61	1 1/2	1 1/2	7/32	5.56	7/32	5.56	1 1/2	38.10
1/4	6.35	5/8	15.87	1	25.40	1 1/2	1 1/2	7/32	5.56	7/32	5.56	1 1/2	38.10
1/4	6.35	5/8	15.87	1 1/8	28.57	1 1/2	1 1/2	7/32	5.56	7/32	5.56	1 1/2	38.10
1/4	6.35	5/8	15.87	1 1/4	31.75	1 1/2	1 1/2	7/32	5.56	7/32	5.56	1 1/2	38.10
9/32	7.14	5/8	15.87	25/32	19.84	1 1/2	1 1/2	7/32	5.56	7/32	5.56	1 1/2	38.10
9/32	7.14	5/8	15.87	13/16	20.64	1 1/2	1 1/2	7/32	5.56	7/32	5.56	1 1/2	38.10
9/32	7.14	5/8	15.87	27/32	21.43	1 1/2	1 1/2	7/32	5.56	7/32	5.56	1 1/2	38.10
9/32	7.14	5/8	15.87	7/8	22.22	1 1/2	1 1/2	7/32	5.56	7/32	5.56	1 1/2	38.10
9/32	7.14	5/8	15.87	29/32	23.02	1 1/2	1 1/2	7/32	5.56	7/32	5.56	1 1/2	38.10
9/32	7.14	5/8	15.87	15/16	23.81	1 1/2	1 1/2	7/32	5.56	7/32	5.56	1 1/2	38.10
9/32	7.14	5/8	15.87	31/32	24.61	1 1/2	1 1/2	7/32	5.56	7/32	5.56	1 1/2	38.10
9/32	7.14	5/8	15.87	1	25.40	1 1/2	1 1/2	7/32	5.56	7/32	5.56	1 1/2	38.10
9/32	7.14	5/8	15.87	1 1/8	28.57	1 1/2	1 1/2	7/32	5.56	7/32	5.56	1 1/2	38.10
9/32	7.14	5/8	15.87	1 1/4	31.75	1 1/2	1 1/2	7/32	5.56	7/32	5.56	1 1/2	38.10
5/16	7.94	5/8	15.87	25/32	19.84	1 1/2	1 1/2	7/32	5.56	7/32	5.56	1 1/2	38.10
5/16	7.94	5/8	15.87	13/16	20.64	1 1/2	1 1/2	7/32	5.56	7/32	5.56	1 1/2	38.10
5/16	7.94	5/8	15.87	27/32	21.43	1 1/2	1 1/2	7/32	5.56	7/32	5.56	1 1/2	38.10
5/16	7.94	5/8	15.87	7/8	22.22	1 1/2	1 1/2	7/32	5.56	7/32	5.56	1 1/2	38.10
5/16	7.94	5/8	15.87	29/32	23.02	1 1/2	1 1/2	7/32	5.56	7/32	5.56	1 1/2	38.10
5/16	7.94	5/8	15.87	15/16	23.81	1 1/2	1 1/2	7/32	5.56	7/32	5.56	1 1/2	38.10
5/16	7.94	5/8	15.87	31/32	24.61	1 1/2	1 1/2	7/32	5.56	7/32	5.56	1 1/2	38.10
5/16	7.94	5/8	15.87	1	25.40	1 1/2	1 1/2	7/32	5.56	7/32	5.56	1 1/2	38.10
5/16	7.94	5/8	15.87	1 1/8	28.57	1 1/2	1 1/2	7/32	5.56	7/32	5.56	1 1/2	38.10
5/16	7.94	5/8	15.87	1 1/4	31.75	1 1/2	1 1/2	7/32	5.56	7/32	5.56	1 1/2	38.10
11/32	8.73	5/8	15.87	25/32	19.84	1 1/2	1 1/2	7/32	5.56	7/32	5.56	1 1/2	38.10
11/32	8.73	5/8	15.87	13/16	20.64	1 1/2	1 1/2	7/32	5.56	7/32	5.56	1 1/2	38.10
11/32	8.73	5/8	15.87	27/32	21.43	1 1/2	1 1/2	7/32	5.56	7/32	5.56	1 1/2	38.10
11/32	8.73	5/8	15.87	7/8	22.22	1 1/2	1 1/2	7/32	5.56	7/32	5.56	1 1/2	38.10
11/32	8.73	5/8	15.87	29/32	23.02	1 1/2	1 1/2	7/32	5.56	7/32	5.56	1 1/2	38.10
11/32	8.73	5/8	15.87	15/16	23.81	1 1/2	1 1/2	7/32	5.56	7/32	5.56	1 1/2	38.10
11/32	8.73	5/8	15.87	31/32	24.61	1 1/2	1 1/2	7/32	5.56	7/32	5.56	1 1/2	38.10
11/32	8.73	5/8	15.87	1	25.40	1 1/2	1 1/2	7/32	5.56	7/32	5.56	1 1/2	38.10
11/32	8.73	5/8	15.87	1 1/8	28.57	1 1/2	1 1/2	7/32	5.56	7/32	5.56	1 1/2	38.10
11/32	8.73	5/8	15.87	1 1/4	31.75	1 1/2	1 1/2	7/32	5.56	7/32	5.56	1 1/2	38.10
3/8	9.52	5/8	15.87	25/32	19.84	1 1/2	1 1/2	7/32	5.56	7/32	5.56	1 1/2	38.10
3/8	9.52	5/8	15.87	13/16	20.64	1 1/2	1 1/2	7/32	5.56	7/32	5.56	1 1/2	38.10
3/8	9.52	5/8	15.87	27/32	21.43	1 1/2	1 1/2	7/32	5.56	7/32	5.56	1 1/2	38.10
3/8	9.52	5/8	15.87	7/8	22.22	1 1/2	1 1/2	7/32	5.56	7/32	5.56	1 1/2	38.10
3/8	9.52	5/8	15.87	29/32	23.02	1 1/2	1 1/2	7/32	5.56	7/32	5.56	1 1/2	38.10
3/8	9.52	5/8	15.87	15/16	23.81	1 1/2	1 1/2	7/32	5.56	7/32	5.56	1 1/2	38.10
3/8	9.52	5/8	15.87	31/32	24.61	1 1/2	1 1/2	7/32	5.56	7/32	5.56	1 1/2	38.10
3/8	9.52	5/8	15.87	1	25.40	1 1/2	1 1/2	7/32	5.56	7/32	5.56	1 1/2	38.10
3/8	9.52	5/8	15.87	1 1/8	28.57	1 1/2	1 1/2	7/32	5.56	7/32	5.56	1 1/2	38.10
3/8	9.52	5/8	15.87	1 1/4	31.75	1 1/2	1 1/2	7/32	5.56	7/32	5.56	1 1/2	38.10

www.globaltungsten.com

B		E		D		M	A	L		T		C	
inch	mm	inch	mm	inch	mm	inch	inch	inch	mm	inch	mm	inch	mm
13/32	10.32	5/8	15.87	25/32	19.84	1 1/2	1 1/2	7/32	5.56	7/32	5.56	1 1/2	38.10
13/32	10.32	5/8	15.87	13/16	20.64	1 1/2	1 1/2	7/32	5.56	7/32	5.56	1 1/2	38.10
13/32	10.32	5/8	15.87	27/32	21.43	1 1/2	1 1/2	7/32	5.56	7/32	5.56	1 1/2	38.10
13/32	10.32	5/8	15.87	7/8	22.22	1 1/2	1 1/2	7/32	5.56	7/32	5.56	1 1/2	38.10
13/32	10.32	5/8	15.87	29/32	23.02	1 1/2	1 1/2	7/32	5.56	7/32	5.56	1 1/2	38.10
13/32	10.32	5/8	15.87	15/16	23.81	1 1/2	1 1/2	7/32	5.56	7/32	5.56	1 1/2	38.10
13/32	10.32	5/8	15.87	31/32	24.61	1 1/2	1 1/2	7/32	5.56	7/32	5.56	1 1/2	38.10
13/32	10.32	5/8	15.87	1	25.40	1 1/2	1 1/2	7/32	5.56	7/32	5.56	1 1/2	38.10
13/32	10.32	5/8	15.87	1 1/8	28.57	1 1/2	1 1/2	7/32	5.56	7/32	5.56	1 1/2	38.10
13/32	10.32	5/8	15.87	1 1/4	31.75	1 1/2	1 1/2	7/32	5.56	7/32	5.56	1 1/2	38.10
7/16	11.11	5/8	15.87	25/32	19.84	1 1/2	1 1/2	7/32	5.56	7/32	5.56	1 1/2	38.10
7/16	11.11	5/8	15.87	13/16	20.64	1 1/2	1 1/2	7/32	5.56	7/32	5.56	1 1/2	38.10
7/16	11.11	5/8	15.87	27/32	21.43	1 1/2	1 1/2	7/32	5.56	7/32	5.56	1 1/2	38.10
7/16	11.11	5/8	15.87	7/8	22.22	1 1/2	1 1/2	7/32	5.56	7/32	5.56	1 1/2	38.10
7/16	11.11	5/8	15.87	29/32	23.02	1 1/2	1 1/2	7/32	5.56	7/32	5.56	1 1/2	38.10
7/16	11.11	5/8	15.87	15/16	23.81	1 1/2	1 1/2	7/32	5.56	7/32	5.56	1 1/2	38.10
7/16	11.11	5/8	15.87	31/32	24.61	1 1/2	1 1/2	7/32	5.56	7/32	5.56	1 1/2	38.10
7/16	11.11	5/8	15.87	1	25.40	1 1/2	1 1/2	7/32	5.56	7/32	5.56	1 1/2	38.10
7/16	11.11	5/8	15.87	1 1/8	28.57	1 1/2	1 1/2	7/32	5.56	7/32	5.56	1 1/2	38.10
7/16	11.11	5/8	15.87	1 1/4	31.75	1 1/2	1 1/2	7/32	5.56	7/32	5.56	1 1/2	38.10
15/32	11.91	5/8	15.87	25/32	19.84	1 1/2	1 1/2	7/32	5.56	7/32	5.56	1 1/2	38.10
15/32	11.91	5/8	15.87	13/16	20.64	1 1/2	1 1/2	7/32	5.56	7/32	5.56	1 1/2	38.10
15/32	11.91	5/8	15.87	27/32	21.43	1 1/2	1 1/2	7/32	5.56	7/32	5.56	1 1/2	38.10
15/32	11.91	5/8	15.87	7/8	22.22	1 1/2	1 1/2	7/32	5.56	7/32	5.56	1 1/2	38.10
15/32	11.91	5/8	15.87	29/32	23.02	1 1/2	1 1/2	7/32	5.56	7/32	5.56	1 1/2	38.10
15/32	11.91	5/8	15.87	15/16	23.81	1 1/2	1 1/2	7/32	5.56	7/32	5.56	1 1/2	38.10
15/32	11.91	5/8	15.87	31/32	24.61	1 1/2	1 1/2	7/32	5.56	7/32	5.56	1 1/2	38.10
15/32	11.91	5/8	15.87	1	25.40	1 1/2	1 1/2	7/32	5.56	7/32	5.56	1 1/2	38.10
15/32	11.91	5/8	15.87	1 1/8	28.57	1 1/2	1 1/2	7/32	5.56	7/32	5.56	1 1/2	38.10
15/32	11.91	5/8	15.87	1 1/4	31.75	1 1/2	1 1/2	7/32	5.56	7/32	5.56	1 1/2	38.10
1/2	12.70	5/8	15.87	25/32	19.84	1 1/2	1 1/2	7/32	5.56	7/32	5.56	1 1/2	38.10
1/2	12.70	5/8	15.87	13/16	20.64	1 1/2	1 1/2	7/32	5.56	7/32	5.56	1 1/2	38.10
1/2	12.70	5/8	15.87	27/32	21.43	1 1/2	1 1/2	7/32	5.56	7/32	5.56	1 1/2	38.10
1/2	12.70	5/8	15.87	7/8	22.22	1 1/2	1 1/2	7/32	5.56	7/32	5.56	1 1/2	38.10
1/2	12.70	5/8	15.87	29/32	23.02	1 1/2	1 1/2	7/32	5.56	7/32	5.56	1 1/2	38.10
1/2	12.70	5/8	15.87	15/16	23.81	1 1/2	1 1/2	7/32	5.56	7/32	5.56	1 1/2	38.10
1/2	12.70	5/8	15.87	31/32	24.61	1 1/2	1 1/2	7/32	5.56	7/32	5.56	1 1/2	38.10
1/2	12.70	5/8	15.87	1	25.40	1 1/2	1 1/2	7/32	5.56	7/32	5.56	1 1/2	38.10
1/2	12.70	5/8	15.87	1 1/8	28.57	1 1/2	1 1/2	7/32	5.56	7/32	5.56	1 1/2	38.10
1/2	12.70	5/8	15.87	1 1/4	31.75	1 1/2	1 1/2	7/32	5.56	7/32	5.56	1 1/2	38.10
17/32	13.49	5/8	15.87	25/32	19.84	1 1/2	1 1/2	7/32	5.56	7/32	5.56	1 1/2	38.10
17/32	13.49	5/8	15.87	13/16	20.64	1 1/2	1 1/2	7/32	5.56	7/32	5.56	1 1/2	38.10
17/32	13.49	5/8	15.87	27/32	21.43	1 1/2	1 1/2	7/32	5.56	7/32	5.56	1 1/2	38.10
17/32	13.49	5/8	15.87	7/8	22.22	1 1/2	1 1/2	7/32	5.56	7/32	5.56	1 1/2	38.10
17/32	13.49	5/8	15.87	29/32	23.02	1 1/2	1 1/2	7/32	5.56	7/32	5.56	1 1/2	38.10

www.globaltungsten.com

B		E		D		M	A	L		T		C	
inch	mm	inch	mm	inch	mm	inch	inch	inch	mm	inch	mm	inch	mm
17/32	13.49	5/8	15.87	15/16	23.81	1 1/2	1 1/2	7/32	5.56	7/32	5.56	1 1/2	38.10
17/32	13.49	5/8	15.87	31/32	24.61	1 1/2	1 1/2	7/32	5.56	7/32	5.56	1 1/2	38.10
17/32	13.49	5/8	15.87	1	25.40	1 1/2	1 1/2	7/32	5.56	7/32	5.56	1 1/2	38.10
17/32	13.49	5/8	15.87	1 1/8	28.57	1 1/2	1 1/2	7/32	5.56	7/32	5.56	1 1/2	38.10
17/32	13.49	5/8	15.87	1 1/4	31.75	1 1/2	1 1/2	7/32	5.56	7/32	5.56	1 1/2	38.10
9/16	14.29	5/8	15.87	25/32	19.84	1 1/2	1 1/2	7/32	5.56	7/32	5.56	1 1/2	38.10
9/16	14.29	5/8	15.87	13/16	20.64	1 1/2	1 1/2	7/32	5.56	7/32	5.56	1 1/2	38.10
9/16	14.29	5/8	15.87	27/32	21.43	1 1/2	1 1/2	7/32	5.56	7/32	5.56	1 1/2	38.10
9/16	14.29	5/8	15.87	7/8	22.22	1 1/2	1 1/2	7/32	5.56	7/32	5.56	1 1/2	38.10
9/16	14.29	5/8	15.87	29/32	23.02	1 1/2	1 1/2	7/32	5.56	7/32	5.56	1 1/2	38.10
9/16	14.29	5/8	15.87	15/16	23.81	1 1/2	1 1/2	7/32	5.56	7/32	5.56	1 1/2	38.10
9/16	14.29	5/8	15.87	31/32	24.61	1 1/2	1 1/2	7/32	5.56	7/32	5.56	1 1/2	38.10
9/16	14.29	5/8	15.87	1	25.40	1 1/2	1 1/2	7/32	5.56	7/32	5.56	1 1/2	38.10
9/16	14.29	5/8	15.87	1 1/8	28.57	1 1/2	1 1/2	7/32	5.56	7/32	5.56	1 1/2	38.10
9/16	14.29	5/8	15.87	1 1/4	31.75	1 1/2	1 1/2	7/32	5.56	7/32	5.56	1 1/2	38.10
19/32	15.08	5/8	15.87	25/32	19.84	1 1/2	1 1/2	7/32	5.56	7/32	5.56	1 1/2	38.10
19/32	15.08	5/8	15.87	13/16	20.64	1 1/2	1 1/2	7/32	5.56	7/32	5.56	1 1/2	38.10
19/32	15.08	5/8	15.87	27/32	21.43	1 1/2	1 1/2	7/32	5.56	7/32	5.56	1 1/2	38.10
19/32	15.08	5/8	15.87	7/8	22.22	1 1/2	1 1/2	7/32	5.56	7/32	5.56	1 1/2	38.10
19/32	15.08	5/8	15.87	29/32	23.02	1 1/2	1 1/2	7/32	5.56	7/32	5.56	1 1/2	38.10
19/32	15.08	5/8	15.87	15/16	23.81	1 1/2	1 1/2	7/32	5.56	7/32	5.56	1 1/2	38.10
19/32	15.08	5/8	15.87	31/32	24.61	1 1/2	1 1/2	7/32	5.56	7/32	5.56	1 1/2	38.10
19/32	15.08	5/8	15.87	1	25.40	1 1/2	1 1/2	7/32	5.56	7/32	5.56	1 1/2	38.10
19/32	15.08	5/8	15.87	1 1/8	28.57	1 1/2	1 1/2	7/32	5.56	7/32	5.56	1 1/2	38.10
19/32	15.08	5/8	15.87	1 1/4	31.75	1 1/2	1 1/2	7/32	5.56	7/32	5.56	1 1/2	38.10
5/8	15.87	5/8	15.87	25/32	19.84	1 1/2	1 1/2	7/32	5.56	7/32	5.56	1 1/2	38.10
5/8	15.87	5/8	15.87	13/16	20.64	1 1/2	1 1/2	7/32	5.56	7/32	5.56	1 1/2	38.10
5/8	15.87	5/8	15.87	27/32	21.43	1 1/2	1 1/2	7/32	5.56	7/32	5.56	1 1/2	38.10
5/8	15.87	5/8	15.87	7/8	22.22	1 1/2	1 1/2	7/32	5.56	7/32	5.56	1 1/2	38.10
5/8	15.87	5/8	15.87	29/32	23.02	1 1/2	1 1/2	7/32	5.56	7/32	5.56	1 1/2	38.10
5/8	15.87	5/8	15.87	15/16	23.81	1 1/2	1 1/2	7/32	5.56	7/32	5.56	1 1/2	38.10
5/8	15.87	5/8	15.87	31/32	24.61	1 1/2	1 1/2	7/32	5.56	7/32	5.56	1 1/2	38.10
5/8	15.87	5/8	15.87	1	25.40	1 1/2	1 1/2	7/32	5.56	7/32	5.56	1 1/2	38.10
5/8	15.87	5/8	15.87	1 1/8	28.57	1 1/2	1 1/2	7/32	5.56	7/32	5.56	1 1/2	38.10
5/8	15.87	5/8	15.87	1 1/4	31.75	1 1/2	1 1/2	7/32	5.56	7/32	5.56	1 1/2	38.10
3/16	4.76	1/2	12.70	21/32	16.67	1 1/2	1 1/2	7/32	5.56	7/32	5.56	1 1/2	38.10
3/16	4.76	1/2	12.70	11/16	17.46	1 1/2	1 1/2	7/32	5.56	7/32	5.56	1 1/2	38.10
3/16	4.76	1/2	12.70	23/32	18.26	1 1/2	1 1/2	7/32	5.56	7/32	5.56	1 1/2	38.10
3/16	4.76	1/2	12.70	3/4	19.05	1 1/2	1 1/2	7/32	5.56	7/32	5.56	1 1/2	38.10
3/16	4.76	1/2	12.70	25/32	19.84	1 1/2	1 1/2	7/32	5.56	7/32	5.56	1 1/2	38.10
3/16	4.76	1/2	12.70	13/16	20.64	1 1/2	1 1/2	7/32	5.56	7/32	5.56	1 1/2	38.10
3/16	4.76	1/2	12.70	27/32	21.43	1 1/2	1 1/2	7/32	5.56	7/32	5.56	1 1/2	38.10
3/16	4.76	1/2	12.70	7/8	22.22	1 1/2	1 1/2	7/32	5.56	7/32	5.56	1 1/2	38.10
3/16	4.76	1/2	12.70	29/32	23.02	1 1/2	1 1/2	7/32	5.56	7/32	5.56	1 1/2	38.10
3/16	4.76	1/2	12.70	15/16	23.81	1 1/2	1 1/2	7/32	5.56	7/32	5.56	1 1/2	38.10

www.globaltungsters.com

B		E		D		M	A	L		T		C	
inch	mm	inch	mm	inch	mm	inch	inch	inch	mm	inch	mm	inch	mm
3/16	4.76	1/2	12.70	31/32	24.61	1 1/2	1 1/2	7/32	5.56	7/32	5.56	1 1/2	38.10
3/16	4.76	1/2	12.70	1	25.40	1 1/2	1 1/2	7/32	5.56	7/32	5.56	1 1/2	38.10
3/16	4.76	1/2	12.70	1 1/8	28.57	1 1/2	1 1/2	7/32	5.56	7/32	5.56	1 1/2	38.10
3/16	4.76	1/2	12.70	1 1/4	31.75	1 1/2	1 1/2	7/32	5.56	7/32	5.56	1 1/2	38.10
7/32	5.56	1/2	12.70	21/32	16.67	1 1/2	1 1/2	7/32	5.56	7/32	5.56	1 1/2	38.10
7/32	5.56	1/2	12.70	11/16	17.46	1 1/2	1 1/2	7/32	5.56	7/32	5.56	1 1/2	38.10
7/32	5.56	1/2	12.70	23/32	18.26	1 1/2	1 1/2	7/32	5.56	7/32	5.56	1 1/2	38.10
7/32	5.56	1/2	12.70	3/4	19.05	1 1/2	1 1/2	7/32	5.56	7/32	5.56	1 1/2	38.10
7/32	5.56	1/2	12.70	25/32	19.84	1 1/2	1 1/2	7/32	5.56	7/32	5.56	1 1/2	38.10
7/32	5.56	1/2	12.70	13/16	20.64	1 1/2	1 1/2	7/32	5.56	7/32	5.56	1 1/2	38.10
7/32	5.56	1/2	12.70	27/32	21.43	1 1/2	1 1/2	7/32	5.56	7/32	5.56	1 1/2	38.10
7/32	5.56	1/2	12.70	7/8	22.22	1 1/2	1 1/2	7/32	5.56	7/32	5.56	1 1/2	38.10
7/32	5.56	1/2	12.70	29/32	23.02	1 1/2	1 1/2	7/32	5.56	7/32	5.56	1 1/2	38.10
7/32	5.56	1/2	12.70	15/16	23.81	1 1/2	1 1/2	7/32	5.56	7/32	5.56	1 1/2	38.10
7/32	5.56	1/2	12.70	31/32	24.61	1 1/2	1 1/2	7/32	5.56	7/32	5.56	1 1/2	38.10
7/32	5.56	1/2	12.70	1	25.40	1 1/2	1 1/2	7/32	5.56	7/32	5.56	1 1/2	38.10
7/32	5.56	1/2	12.70	1 1/8	28.57	1 1/2	1 1/2	7/32	5.56	7/32	5.56	1 1/2	38.10
7/32	5.56	1/2	12.70	1 1/4	31.75	1 1/2	1 1/2	7/32	5.56	7/32	5.56	1 1/2	38.10
1/4	6.35	1/2	12.70	21/32	16.67	1 1/2	1 1/2	7/32	5.56	7/32	5.56	1 1/2	38.10
1/4	6.35	1/2	12.70	11/16	17.46	1 1/2	1 1/2	7/32	5.56	7/32	5.56	1 1/2	38.10
1/4	6.35	1/2	12.70	23/32	18.26	1 1/2	1 1/2	7/32	5.56	7/32	5.56	1 1/2	38.10
1/4	6.35	1/2	12.70	3/4	19.05	1 1/2	1 1/2	7/32	5.56	7/32	5.56	1 1/2	38.10
1/4	6.35	1/2	12.70	25/32	19.84	1 1/2	1 1/2	7/32	5.56	7/32	5.56	1 1/2	38.10
1/4	6.35	1/2	12.70	13/16	20.64	1 1/2	1 1/2	7/32	5.56	7/32	5.56	1 1/2	38.10
1/4	6.35	1/2	12.70	27/32	21.43	1 1/2	1 1/2	7/32	5.56	7/32	5.56	1 1/2	38.10
1/4	6.35	1/2	12.70	7/8	22.22	1 1/2	1 1/2	7/32	5.56	7/32	5.56	1 1/2	38.10
1/4	6.35	1/2	12.70	29/32	23.02	1 1/2	1 1/2	7/32	5.56	7/32	5.56	1 1/2	38.10
1/4	6.35	1/2	12.70	15/16	23.81	1 1/2	1 1/2	7/32	5.56	7/32	5.56	1 1/2	38.10
1/4	6.35	1/2	12.70	31/32	24.61	1 1/2	1 1/2	7/32	5.56	7/32	5.56	1 1/2	38.10
1/4	6.35	1/2	12.70	1	25.40	1 1/2	1 1/2	7/32	5.56	7/32	5.56	1 1/2	38.10
1/4	6.35	1/2	12.70	1 1/8	28.57	1 1/2	1 1/2	7/32	5.56	7/32	5.56	1 1/2	38.10
1/4	6.35	1/2	12.70	1 1/4	31.75	1 1/2	1 1/2	7/32	5.56	7/32	5.56	1 1/2	38.10
9/32	7.14	1/2	12.70	21/32	16.67	1 1/2	1 1/2	7/32	5.56	7/32	5.56	1 1/2	38.10
9/32	7.14	1/2	12.70	11/16	17.46	1 1/2	1 1/2	7/32	5.56	7/32	5.56	1 1/2	38.10
9/32	7.14	1/2	12.70	23/32	18.26	1 1/2	1 1/2	7/32	5.56	7/32	5.56	1 1/2	38.10
9/32	7.14	1/2	12.70	3/4	19.05	1 1/2	1 1/2	7/32	5.56	7/32	5.56	1 1/2	38.10
9/32	7.14	1/2	12.70	25/32	19.84	1 1/2	1 1/2	7/32	5.56	7/32	5.56	1 1/2	38.10
9/32	7.14	1/2	12.70	13/16	20.64	1 1/2	1 1/2	7/32	5.56	7/32	5.56	1 1/2	38.10
9/32	7.14	1/2	12.70	27/32	21.43	1 1/2	1 1/2	7/32	5.56	7/32	5.56	1 1/2	38.10
9/32	7.14	1/2	12.70	7/8	22.22	1 1/2	1 1/2	7/32	5.56	7/32	5.56	1 1/2	38.10
9/32	7.14	1/2	12.70	29/32	23.02	1 1/2	1 1/2	7/32	5.56	7/32	5.56	1 1/2	38.10
9/32	7.14	1/2	12.70	15/16	23.81	1 1/2	1 1/2	7/32	5.56	7/32	5.56	1 1/2	38.10
9/32	7.14	1/2	12.70	31/32	24.61	1 1/2	1 1/2	7/32	5.56	7/32	5.56	1 1/2	38.10
9/32	7.14	1/2	12.70	1	25.40	1 1/2	1 1/2	7/32	5.56	7/32	5.56	1 1/2	38.10
9/32	7.14	1/2	12.70	1 1/8	28.57	1 1/2	1 1/2	7/32	5.56	7/32	5.56	1 1/2	38.10

www.globaltungsten.com

B		E		D		M	A	L		T		C	
inch	mm	inch	mm	inch	mm	inch	inch	inch	mm	inch	mm	inch	mm
9/32	7.14	1/2	12.70	1 1/4	31.75	1 1/2	1 1/2	7/32	5.56	7/32	5.56	1 1/2	38.10
5/16	7.94	1/2	12.70	21/32	16.67	1 1/2	1 1/2	7/32	5.56	7/32	5.56	1 1/2	38.10
5/16	7.94	1/2	12.70	11/16	17.46	1 1/2	1 1/2	7/32	5.56	7/32	5.56	1 1/2	38.10
5/16	7.94	1/2	12.70	23/32	18.26	1 1/2	1 1/2	7/32	5.56	7/32	5.56	1 1/2	38.10
5/16	7.94	1/2	12.70	3/4	19.05	1 1/2	1 1/2	7/32	5.56	7/32	5.56	1 1/2	38.10
5/16	7.94	1/2	12.70	25/32	19.84	1 1/2	1 1/2	7/32	5.56	7/32	5.56	1 1/2	38.10
5/16	7.94	1/2	12.70	13/16	20.64	1 1/2	1 1/2	7/32	5.56	7/32	5.56	1 1/2	38.10
5/16	7.94	1/2	12.70	27/32	21.43	1 1/2	1 1/2	7/32	5.56	7/32	5.56	1 1/2	38.10
5/16	7.94	1/2	12.70	7/8	22.22	1 1/2	1 1/2	7/32	5.56	7/32	5.56	1 1/2	38.10
5/16	7.94	1/2	12.70	29/32	23.02	1 1/2	1 1/2	7/32	5.56	7/32	5.56	1 1/2	38.10
5/16	7.94	1/2	12.70	15/16	23.81	1 1/2	1 1/2	7/32	5.56	7/32	5.56	1 1/2	38.10
5/16	7.94	1/2	12.70	31/32	24.61	1 1/2	1 1/2	7/32	5.56	7/32	5.56	1 1/2	38.10
5/16	7.94	1/2	12.70	1	25.40	1 1/2	1 1/2	7/32	5.56	7/32	5.56	1 1/2	38.10
5/16	7.94	1/2	12.70	1 1/8	28.57	1 1/2	1 1/2	7/32	5.56	7/32	5.56	1 1/2	38.10
5/16	7.94	1/2	12.70	1 1/4	31.75	1 1/2	1 1/2	7/32	5.56	7/32	5.56	1 1/2	38.10
11/32	8.73	1/2	12.70	21/32	16.67	1 1/2	1 1/2	7/32	5.56	7/32	5.56	1 1/2	38.10
11/32	8.73	1/2	12.70	11/16	17.46	1 1/2	1 1/2	7/32	5.56	7/32	5.56	1 1/2	38.10
11/32	8.73	1/2	12.70	23/32	18.26	1 1/2	1 1/2	7/32	5.56	7/32	5.56	1 1/2	38.10
11/32	8.73	1/2	12.70	3/4	19.05	1 1/2	1 1/2	7/32	5.56	7/32	5.56	1 1/2	38.10
11/32	8.73	1/2	12.70	25/32	19.84	1 1/2	1 1/2	7/32	5.56	7/32	5.56	1 1/2	38.10
11/32	8.73	1/2	12.70	13/16	20.64	1 1/2	1 1/2	7/32	5.56	7/32	5.56	1 1/2	38.10
11/32	8.73	1/2	12.70	27/32	21.43	1 1/2	1 1/2	7/32	5.56	7/32	5.56	1 1/2	38.10
11/32	8.73	1/2	12.70	7/8	22.22	1 1/2	1 1/2	7/32	5.56	7/32	5.56	1 1/2	38.10
11/32	8.73	1/2	12.70	29/32	23.02	1 1/2	1 1/2	7/32	5.56	7/32	5.56	1 1/2	38.10
11/32	8.73	1/2	12.70	15/16	23.81	1 1/2	1 1/2	7/32	5.56	7/32	5.56	1 1/2	38.10
11/32	8.73	1/2	12.70	31/32	24.61	1 1/2	1 1/2	7/32	5.56	7/32	5.56	1 1/2	38.10
11/32	8.73	1/2	12.70	1	25.40	1 1/2	1 1/2	7/32	5.56	7/32	5.56	1 1/2	38.10
11/32	8.73	1/2	12.70	1 1/8	28.57	1 1/2	1 1/2	7/32	5.56	7/32	5.56	1 1/2	38.10
11/32	8.73	1/2	12.70	1 1/4	31.75	1 1/2	1 1/2	7/32	5.56	7/32	5.56	1 1/2	38.10
3/8	9.52	1/2	12.70	21/32	16.67	1 1/2	1 1/2	7/32	5.56	7/32	5.56	1 1/2	38.10
3/8	9.52	1/2	12.70	11/16	17.46	1 1/2	1 1/2	7/32	5.56	7/32	5.56	1 1/2	38.10
3/8	9.52	1/2	12.70	23/32	18.26	1 1/2	1 1/2	7/32	5.56	7/32	5.56	1 1/2	38.10
3/8	9.52	1/2	12.70	3/4	19.05	1 1/2	1 1/2	7/32	5.56	7/32	5.56	1 1/2	38.10
3/8	9.52	1/2	12.70	25/32	19.84	1 1/2	1 1/2	7/32	5.56	7/32	5.56	1 1/2	38.10
3/8	9.52	1/2	12.70	13/16	20.64	1 1/2	1 1/2	7/32	5.56	7/32	5.56	1 1/2	38.10
3/8	9.52	1/2	12.70	27/32	21.43	1 1/2	1 1/2	7/32	5.56	7/32	5.56	1 1/2	38.10
3/8	9.52	1/2	12.70	7/8	22.22	1 1/2	1 1/2	7/32	5.56	7/32	5.56	1 1/2	38.10
3/8	9.52	1/2	12.70	29/32	23.02	1 1/2	1 1/2	7/32	5.56	7/32	5.56	1 1/2	38.10
3/8	9.52	1/2	12.70	15/16	23.81	1 1/2	1 1/2	7/32	5.56	7/32	5.56	1 1/2	38.10
3/8	9.52	1/2	12.70	31/32	24.61	1 1/2	1 1/2	7/32	5.56	7/32	5.56	1 1/2	38.10
3/8	9.52	1/2	12.70	1	25.40	1 1/2	1 1/2	7/32	5.56	7/32	5.56	1 1/2	38.10
3/8	9.52	1/2	12.70	1 1/8	28.57	1 1/2	1 1/2	7/32	5.56	7/32	5.56	1 1/2	38.10
3/8	9.52	1/2	12.70	1 1/4	31.75	1 1/2	1 1/2	7/32	5.56	7/32	5.56	1 1/2	38.10
13/32	10.32	1/2	12.70	21/32	16.67	1 1/2	1 1/2	7/32	5.56	7/32	5.56	1 1/2	38.10
13/32	10.32	1/2	12.70	11/16	17.46	1 1/2	1 1/2	7/32	5.56	7/32	5.56	1 1/2	38.10

www.globaltungsten.com

B		E		D		M	A	L		T		C	
inch	mm	inch	mm	inch	mm	inch	inch	inch	mm	inch	mm	inch	mm
13/32	10.32	1/2	12.70	23/32	18.26	1 1/2	1 1/2	7/32	5.56	7/32	5.56	1 1/2	38.10
13/32	10.32	1/2	12.70	3/4	19.05	1 1/2	1 1/2	7/32	5.56	7/32	5.56	1 1/2	38.10
13/32	10.32	1/2	12.70	25/32	19.84	1 1/2	1 1/2	7/32	5.56	7/32	5.56	1 1/2	38.10
13/32	10.32	1/2	12.70	13/16	20.64	1 1/2	1 1/2	7/32	5.56	7/32	5.56	1 1/2	38.10
13/32	10.32	1/2	12.70	27/32	21.43	1 1/2	1 1/2	7/32	5.56	7/32	5.56	1 1/2	38.10
13/32	10.32	1/2	12.70	7/8	22.22	1 1/2	1 1/2	7/32	5.56	7/32	5.56	1 1/2	38.10
13/32	10.32	1/2	12.70	29/32	23.02	1 1/2	1 1/2	7/32	5.56	7/32	5.56	1 1/2	38.10
13/32	10.32	1/2	12.70	15/16	23.81	1 1/2	1 1/2	7/32	5.56	7/32	5.56	1 1/2	38.10
13/32	10.32	1/2	12.70	31/32	24.61	1 1/2	1 1/2	7/32	5.56	7/32	5.56	1 1/2	38.10
13/32	10.32	1/2	12.70	1	25.40	1 1/2	1 1/2	7/32	5.56	7/32	5.56	1 1/2	38.10
13/32	10.32	1/2	12.70	1 1/8	28.57	1 1/2	1 1/2	7/32	5.56	7/32	5.56	1 1/2	38.10
13/32	10.32	1/2	12.70	1 1/4	31.75	1 1/2	1 1/2	7/32	5.56	7/32	5.56	1 1/2	38.10
7/16	11.11	1/2	12.70	21/32	16.67	1 1/2	1 1/2	7/32	5.56	7/32	5.56	1 1/2	38.10
7/16	11.11	1/2	12.70	11/16	17.46	1 1/2	1 1/2	7/32	5.56	7/32	5.56	1 1/2	38.10
7/16	11.11	1/2	12.70	23/32	18.26	1 1/2	1 1/2	7/32	5.56	7/32	5.56	1 1/2	38.10
7/16	11.11	1/2	12.70	3/4	19.05	1 1/2	1 1/2	7/32	5.56	7/32	5.56	1 1/2	38.10
7/16	11.11	1/2	12.70	25/32	19.84	1 1/2	1 1/2	7/32	5.56	7/32	5.56	1 1/2	38.10
7/16	11.11	1/2	12.70	13/16	20.64	1 1/2	1 1/2	7/32	5.56	7/32	5.56	1 1/2	38.10
7/16	11.11	1/2	12.70	27/32	21.43	1 1/2	1 1/2	7/32	5.56	7/32	5.56	1 1/2	38.10
7/16	11.11	1/2	12.70	7/8	22.22	1 1/2	1 1/2	7/32	5.56	7/32	5.56	1 1/2	38.10
7/16	11.11	1/2	12.70	29/32	23.02	1 1/2	1 1/2	7/32	5.56	7/32	5.56	1 1/2	38.10
7/16	11.11	1/2	12.70	15/16	23.81	1 1/2	1 1/2	7/32	5.56	7/32	5.56	1 1/2	38.10
7/16	11.11	1/2	12.70	31/32	24.61	1 1/2	1 1/2	7/32	5.56	7/32	5.56	1 1/2	38.10
7/16	11.11	1/2	12.70	1	25.40	1 1/2	1 1/2	7/32	5.56	7/32	5.56	1 1/2	38.10
7/16	11.11	1/2	12.70	1 1/8	28.57	1 1/2	1 1/2	7/32	5.56	7/32	5.56	1 1/2	38.10
7/16	11.11	1/2	12.70	1 1/4	31.75	1 1/2	1 1/2	7/32	5.56	7/32	5.56	1 1/2	38.10
15/32	11.91	1/2	12.70	21/32	16.67	1 1/2	1 1/2	7/32	5.56	7/32	5.56	1 1/2	38.10
15/32	11.91	1/2	12.70	11/16	17.46	1 1/2	1 1/2	7/32	5.56	7/32	5.56	1 1/2	38.10
15/32	11.91	1/2	12.70	23/32	18.26	1 1/2	1 1/2	7/32	5.56	7/32	5.56	1 1/2	38.10
15/32	11.91	1/2	12.70	3/4	19.05	1 1/2	1 1/2	7/32	5.56	7/32	5.56	1 1/2	38.10
15/32	11.91	1/2	12.70	25/32	19.84	1 1/2	1 1/2	7/32	5.56	7/32	5.56	1 1/2	38.10
15/32	11.91	1/2	12.70	13/16	20.64	1 1/2	1 1/2	7/32	5.56	7/32	5.56	1 1/2	38.10
15/32	11.91	1/2	12.70	27/32	21.43	1 1/2	1 1/2	7/32	5.56	7/32	5.56	1 1/2	38.10
15/32	11.91	1/2	12.70	7/8	22.22	1 1/2	1 1/2	7/32	5.56	7/32	5.56	1 1/2	38.10
15/32	11.91	1/2	12.70	29/32	23.02	1 1/2	1 1/2	7/32	5.56	7/32	5.56	1 1/2	38.10
15/32	11.91	1/2	12.70	15/16	23.81	1 1/2	1 1/2	7/32	5.56	7/32	5.56	1 1/2	38.10
15/32	11.91	1/2	12.70	31/32	24.61	1 1/2	1 1/2	7/32	5.56	7/32	5.56	1 1/2	38.10
15/32	11.91	1/2	12.70	1	25.40	1 1/2	1 1/2	7/32	5.56	7/32	5.56	1 1/2	38.10
15/32	11.91	1/2	12.70	1 1/8	28.57	1 1/2	1 1/2	7/32	5.56	7/32	5.56	1 1/2	38.10
15/32	11.91	1/2	12.70	1 1/4	31.75	1 1/2	1 1/2	7/32	5.56	7/32	5.56	1 1/2	38.10
1/2	12.70	1/2	12.70	21/32	16.67	1 1/2	1 1/2	7/32	5.56	7/32	5.56	1 1/2	38.10
1/2	12.70	1/2	12.70	11/16	17.46	1 1/2	1 1/2	7/32	5.56	7/32	5.56	1 1/2	38.10
1/2	12.70	1/2	12.70	23/32	18.26	1 1/2	1 1/2	7/32	5.56	7/32	5.56	1 1/2	38.10
1/2	12.70	1/2	12.70	3/4	19.05	1 1/2	1 1/2	7/32	5.56	7/32	5.56	1 1/2	38.10
1/2	12.70	1/2	12.70	25/32	19.84	1 1/2	1 1/2	7/32	5.56	7/32	5.56	1 1/2	38.10

www.globaltungsten.com

B		E		D		M	A	L		T		C	
inch	mm	inch	mm	inch	mm	inch	inch	inch	mm	inch	mm	inch	mm
1/2	12.70	1/2	12.70	13/16	20.64	1 1/2	1 1/2	7/32	5.56	7/32	5.56	1 1/2	38.10
1/2	12.70	1/2	12.70	27/32	21.43	1 1/2	1 1/2	7/32	5.56	7/32	5.56	1 1/2	38.10
1/2	12.70	1/2	12.70	7/8	22.22	1 1/2	1 1/2	7/32	5.56	7/32	5.56	1 1/2	38.10
1/2	12.70	1/2	12.70	29/32	23.02	1 1/2	1 1/2	7/32	5.56	7/32	5.56	1 1/2	38.10
1/2	12.70	1/2	12.70	15/16	23.81	1 1/2	1 1/2	7/32	5.56	7/32	5.56	1 1/2	38.10
1/2	12.70	1/2	12.70	31/32	24.61	1 1/2	1 1/2	7/32	5.56	7/32	5.56	1 1/2	38.10
1/2	12.70	1/2	12.70	1	25.40	1 1/2	1 1/2	7/32	5.56	7/32	5.56	1 1/2	38.10
1/2	12.70	1/2	12.70	1 1/8	28.57	1 1/2	1 1/2	7/32	5.56	7/32	5.56	1 1/2	38.10
1/2	12.70	1/2	12.70	1 1/4	31.75	1 1/2	1 1/2	7/32	5.56	7/32	5.56	1 1/2	38.10
3/16	4.76	3/8	9.52	19/32	15.08	1 1/2	1 1/2	7/32	5.56	7/32	5.56	1 1/2	38.10
3/16	4.76	3/8	9.52	5/8	15.87	1 1/2	1 1/2	7/32	5.56	7/32	5.56	1 1/2	38.10
3/16	4.76	3/8	9.52	21/32	16.67	1 1/2	1 1/2	7/32	5.56	7/32	5.56	1 1/2	38.10
3/16	4.76	3/8	9.52	11/16	17.46	1 1/2	1 1/2	7/32	5.56	7/32	5.56	1 1/2	38.10
3/16	4.76	3/8	9.52	23/32	18.26	1 1/2	1 1/2	7/32	5.56	7/32	5.56	1 1/2	38.10
3/16	4.76	3/8	9.52	3/4	19.05	1 1/2	1 1/2	7/32	5.56	7/32	5.56	1 1/2	38.10
3/16	4.76	3/8	9.52	25/32	19.84	1 1/2	1 1/2	7/32	5.56	7/32	5.56	1 1/2	38.10
3/16	4.76	3/8	9.52	13/16	20.64	1 1/2	1 1/2	7/32	5.56	7/32	5.56	1 1/2	38.10
3/16	4.76	3/8	9.52	27/32	21.43	1 1/2	1 1/2	7/32	5.56	7/32	5.56	1 1/2	38.10
3/16	4.76	3/8	9.52	7/8	22.22	1 1/2	1 1/2	7/32	5.56	7/32	5.56	1 1/2	38.10
3/16	4.76	3/8	9.52	29/32	23.02	1 1/2	1 1/2	7/32	5.56	7/32	5.56	1 1/2	38.10
3/16	4.76	3/8	9.52	15/16	23.81	1 1/2	1 1/2	7/32	5.56	7/32	5.56	1 1/2	38.10
3/16	4.76	3/8	9.52	31/32	24.61	1 1/2	1 1/2	7/32	5.56	7/32	5.56	1 1/2	38.10
3/16	4.76	3/8	9.52	1	25.40	1 1/2	1 1/2	7/32	5.56	7/32	5.56	1 1/2	38.10
3/16	4.76	3/8	9.52	1 1/8	28.57	1 1/2	1 1/2	7/32	5.56	7/32	5.56	1 1/2	38.10
3/16	4.76	3/8	9.52	1 1/4	31.75	1 1/2	1 1/2	7/32	5.56	7/32	5.56	1 1/2	38.10
7/32	5.56	3/8	9.52	19/32	15.08	1 1/2	1 1/2	7/32	5.56	7/32	5.56	1 1/2	38.10
7/32	5.56	3/8	9.52	5/8	15.87	1 1/2	1 1/2	7/32	5.56	7/32	5.56	1 1/2	38.10
7/32	5.56	3/8	9.52	21/32	16.67	1 1/2	1 1/2	7/32	5.56	7/32	5.56	1 1/2	38.10
7/32	5.56	3/8	9.52	11/16	17.46	1 1/2	1 1/2	7/32	5.56	7/32	5.56	1 1/2	38.10
7/32	5.56	3/8	9.52	23/32	18.26	1 1/2	1 1/2	7/32	5.56	7/32	5.56	1 1/2	38.10
7/32	5.56	3/8	9.52	3/4	19.05	1 1/2	1 1/2	7/32	5.56	7/32	5.56	1 1/2	38.10
7/32	5.56	3/8	9.52	25/32	19.84	1 1/2	1 1/2	7/32	5.56	7/32	5.56	1 1/2	38.10
7/32	5.56	3/8	9.52	13/16	20.64	1 1/2	1 1/2	7/32	5.56	7/32	5.56	1 1/2	38.10
7/32	5.56	3/8	9.52	27/32	21.43	1 1/2	1 1/2	7/32	5.56	7/32	5.56	1 1/2	38.10
7/32	5.56	3/8	9.52	7/8	22.22	1 1/2	1 1/2	7/32	5.56	7/32	5.56	1 1/2	38.10
7/32	5.56	3/8	9.52	29/32	23.02	1 1/2	1 1/2	7/32	5.56	7/32	5.56	1 1/2	38.10
7/32	5.56	3/8	9.52	15/16	23.81	1 1/2	1 1/2	7/32	5.56	7/32	5.56	1 1/2	38.10
7/32	5.56	3/8	9.52	31/32	24.61	1 1/2	1 1/2	7/32	5.56	7/32	5.56	1 1/2	38.10
7/32	5.56	3/8	9.52	1	25.40	1 1/2	1 1/2	7/32	5.56	7/32	5.56	1 1/2	38.10
7/32	5.56	3/8	9.52	1 1/8	28.57	1 1/2	1 1/2	7/32	5.56	7/32	5.56	1 1/2	38.10
7/32	5.56	3/8	9.52	1 1/4	31.75	1 1/2	1 1/2	7/32	5.56	7/32	5.56	1 1/2	38.10
1/4	6.35	3/8	9.52	19/32	15.08	1 1/2	1 1/2	7/32	5.56	7/32	5.56	1 1/2	38.10
1/4	6.35	3/8	9.52	5/8	15.87	1 1/2	1 1/2	7/32	5.56	7/32	5.56	1 1/2	38.10
1/4	6.35	3/8	9.52	21/32	16.67	1 1/2	1 1/2	7/32	5.56	7/32	5.56	1 1/2	38.10
1/4	6.35	3/8	9.52	11/16	17.46	1 1/2	1 1/2	7/32	5.56	7/32	5.56	1 1/2	38.10

www.globaltungsten.com

B		E		D		M	A	L		T		C	
inch	mm	inch	mm	inch	mm	inch	inch	inch	mm	inch	mm	inch	mm
1/4	6.35	3/8	9.52	23/32	18.26	1 1/2	1 1/2	7/32	5.56	7/32	5.56	1 1/2	38.10
1/4	6.35	3/8	9.52	3/4	19.05	1 1/2	1 1/2	7/32	5.56	7/32	5.56	1 1/2	38.10
1/4	6.35	3/8	9.52	25/32	19.84	1 1/2	1 1/2	7/32	5.56	7/32	5.56	1 1/2	38.10
1/4	6.35	3/8	9.52	13/16	20.64	1 1/2	1 1/2	7/32	5.56	7/32	5.56	1 1/2	38.10
1/4	6.35	3/8	9.52	27/32	21.43	1 1/2	1 1/2	7/32	5.56	7/32	5.56	1 1/2	38.10
1/4	6.35	3/8	9.52	7/8	22.22	1 1/2	1 1/2	7/32	5.56	7/32	5.56	1 1/2	38.10
1/4	6.35	3/8	9.52	29/32	23.02	1 1/2	1 1/2	7/32	5.56	7/32	5.56	1 1/2	38.10
1/4	6.35	3/8	9.52	15/16	23.81	1 1/2	1 1/2	7/32	5.56	7/32	5.56	1 1/2	38.10
1/4	6.35	3/8	9.52	31/32	24.61	1 1/2	1 1/2	7/32	5.56	7/32	5.56	1 1/2	38.10
1/4	6.35	3/8	9.52	1	25.40	1 1/2	1 1/2	7/32	5.56	7/32	5.56	1 1/2	38.10
1/4	6.35	3/8	9.52	1 1/8	28.57	1 1/2	1 1/2	7/32	5.56	7/32	5.56	1 1/2	38.10
1/4	6.35	3/8	9.52	1 1/4	31.75	1 1/2	1 1/2	7/32	5.56	7/32	5.56	1 1/2	38.10
9/32	7.14	3/8	9.52	19/32	15.08	1 1/2	1 1/2	7/32	5.56	7/32	5.56	1 1/2	38.10
9/32	7.14	3/8	9.52	5/8	15.87	1 1/2	1 1/2	7/32	5.56	7/32	5.56	1 1/2	38.10
9/32	7.14	3/8	9.52	21/32	16.67	1 1/2	1 1/2	7/32	5.56	7/32	5.56	1 1/2	38.10
9/32	7.14	3/8	9.52	11/16	17.46	1 1/2	1 1/2	7/32	5.56	7/32	5.56	1 1/2	38.10
9/32	7.14	3/8	9.52	23/32	18.26	1 1/2	1 1/2	7/32	5.56	7/32	5.56	1 1/2	38.10
9/32	7.14	3/8	9.52	3/4	19.05	1 1/2	1 1/2	7/32	5.56	7/32	5.56	1 1/2	38.10
9/32	7.14	3/8	9.52	25/32	19.84	1 1/2	1 1/2	7/32	5.56	7/32	5.56	1 1/2	38.10
9/32	7.14	3/8	9.52	13/16	20.64	1 1/2	1 1/2	7/32	5.56	7/32	5.56	1 1/2	38.10
9/32	7.14	3/8	9.52	27/32	21.43	1 1/2	1 1/2	7/32	5.56	7/32	5.56	1 1/2	38.10
9/32	7.14	3/8	9.52	7/8	22.22	1 1/2	1 1/2	7/32	5.56	7/32	5.56	1 1/2	38.10
9/32	7.14	3/8	9.52	29/32	23.02	1 1/2	1 1/2	7/32	5.56	7/32	5.56	1 1/2	38.10
9/32	7.14	3/8	9.52	15/16	23.81	1 1/2	1 1/2	7/32	5.56	7/32	5.56	1 1/2	38.10
9/32	7.14	3/8	9.52	31/32	24.61	1 1/2	1 1/2	7/32	5.56	7/32	5.56	1 1/2	38.10
9/32	7.14	3/8	9.52	1	25.40	1 1/2	1 1/2	7/32	5.56	7/32	5.56	1 1/2	38.10
9/32	7.14	3/8	9.52	1 1/8	28.57	1 1/2	1 1/2	7/32	5.56	7/32	5.56	1 1/2	38.10
9/32	7.14	3/8	9.52	1 1/4	31.75	1 1/2	1 1/2	7/32	5.56	7/32	5.56	1 1/2	38.10
5/16	7.94	3/8	9.52	19/32	15.08	1 1/2	1 1/2	7/32	5.56	7/32	5.56	1 1/2	38.10
5/16	7.94	3/8	9.52	5/8	15.87	1 1/2	1 1/2	7/32	5.56	7/32	5.56	1 1/2	38.10
5/16	7.94	3/8	9.52	21/32	16.67	1 1/2	1 1/2	7/32	5.56	7/32	5.56	1 1/2	38.10
5/16	7.94	3/8	9.52	11/16	17.46	1 1/2	1 1/2	7/32	5.56	7/32	5.56	1 1/2	38.10
5/16	7.94	3/8	9.52	23/32	18.26	1 1/2	1 1/2	7/32	5.56	7/32	5.56	1 1/2	38.10
5/16	7.94	3/8	9.52	3/4	19.05	1 1/2	1 1/2	7/32	5.56	7/32	5.56	1 1/2	38.10
5/16	7.94	3/8	9.52	25/32	19.84	1 1/2	1 1/2	7/32	5.56	7/32	5.56	1 1/2	38.10
5/16	7.94	3/8	9.52	13/16	20.64	1 1/2	1 1/2	7/32	5.56	7/32	5.56	1 1/2	38.10
5/16	7.94	3/8	9.52	27/32	21.43	1 1/2	1 1/2	7/32	5.56	7/32	5.56	1 1/2	38.10
5/16	7.94	3/8	9.52	7/8	22.22	1 1/2	1 1/2	7/32	5.56	7/32	5.56	1 1/2	38.10
5/16	7.94	3/8	9.52	29/32	23.02	1 1/2	1 1/2	7/32	5.56	7/32	5.56	1 1/2	38.10
5/16	7.94	3/8	9.52	15/16	23.81	1 1/2	1 1/2	7/32	5.56	7/32	5.56	1 1/2	38.10
5/16	7.94	3/8	9.52	31/32	24.61	1 1/2	1 1/2	7/32	5.56	7/32	5.56	1 1/2	38.10
5/16	7.94	3/8	9.52	1	25.40	1 1/2	1 1/2	7/32	5.56	7/32	5.56	1 1/2	38.10
5/16	7.94	3/8	9.52	1 1/8	28.57	1 1/2	1 1/2	7/32	5.56	7/32	5.56	1 1/2	38.10
5/16	7.94	3/8	9.52	1 1/4	31.75	1 1/2	1 1/2	7/32	5.56	7/32	5.56	1 1/2	38.10
11/32	8.73	3/8	9.52	19/32	15.08	1 1/2	1 1/2	7/32	5.56	7/32	5.56	1 1/2	38.10

www.globaltungsten.com

B		E		D		M	A	L		T		C	
inch	mm	inch	mm	inch	mm	inch	inch	inch	mm	inch	mm	inch	mm
11/32	8.73	3/8	9.52	5/8	15.87	1 1/2	1 1/2	7/32	5.56	7/32	5.56	1 1/2	38.10
11/32	8.73	3/8	9.52	21/32	16.67	1 1/2	1 1/2	7/32	5.56	7/32	5.56	1 1/2	38.10
11/32	8.73	3/8	9.52	11/16	17.46	1 1/2	1 1/2	7/32	5.56	7/32	5.56	1 1/2	38.10
11/32	8.73	3/8	9.52	23/32	18.26	1 1/2	1 1/2	7/32	5.56	7/32	5.56	1 1/2	38.10
11/32	8.73	3/8	9.52	3/4	19.05	1 1/2	1 1/2	7/32	5.56	7/32	5.56	1 1/2	38.10
11/32	8.73	3/8	9.52	25/32	19.84	1 1/2	1 1/2	7/32	5.56	7/32	5.56	1 1/2	38.10
11/32	8.73	3/8	9.52	13/16	20.64	1 1/2	1 1/2	7/32	5.56	7/32	5.56	1 1/2	38.10
11/32	8.73	3/8	9.52	27/32	21.43	1 1/2	1 1/2	7/32	5.56	7/32	5.56	1 1/2	38.10
11/32	8.73	3/8	9.52	7/8	22.22	1 1/2	1 1/2	7/32	5.56	7/32	5.56	1 1/2	38.10
11/32	8.73	3/8	9.52	29/32	23.02	1 1/2	1 1/2	7/32	5.56	7/32	5.56	1 1/2	38.10
11/32	8.73	3/8	9.52	15/16	23.81	1 1/2	1 1/2	7/32	5.56	7/32	5.56	1 1/2	38.10
11/32	8.73	3/8	9.52	31/32	24.61	1 1/2	1 1/2	7/32	5.56	7/32	5.56	1 1/2	38.10
11/32	8.73	3/8	9.52	1	25.40	1 1/2	1 1/2	7/32	5.56	7/32	5.56	1 1/2	38.10
11/32	8.73	3/8	9.52	1 1/8	28.57	1 1/2	1 1/2	7/32	5.56	7/32	5.56	1 1/2	38.10
11/32	8.73	3/8	9.52	1 1/4	31.75	1 1/2	1 1/2	7/32	5.56	7/32	5.56	1 1/2	38.10
3/8	9.52	3/8	9.52	19/32	15.08	1 1/2	1 1/2	7/32	5.56	7/32	5.56	1 1/2	38.10
3/8	9.52	3/8	9.52	5/8	15.87	1 1/2	1 1/2	7/32	5.56	7/32	5.56	1 1/2	38.10
3/8	9.52	3/8	9.52	21/32	16.67	1 1/2	1 1/2	7/32	5.56	7/32	5.56	1 1/2	38.10
3/8	9.52	3/8	9.52	11/16	17.46	1 1/2	1 1/2	7/32	5.56	7/32	5.56	1 1/2	38.10
3/8	9.52	3/8	9.52	23/32	18.26	1 1/2	1 1/2	7/32	5.56	7/32	5.56	1 1/2	38.10
3/8	9.52	3/8	9.52	3/4	19.05	1 1/2	1 1/2	7/32	5.56	7/32	5.56	1 1/2	38.10
3/8	9.52	3/8	9.52	25/32	19.84	1 1/2	1 1/2	7/32	5.56	7/32	5.56	1 1/2	38.10
3/8	9.52	3/8	9.52	13/16	20.64	1 1/2	1 1/2	7/32	5.56	7/32	5.56	1 1/2	38.10
3/8	9.52	3/8	9.52	27/32	21.43	1 1/2	1 1/2	7/32	5.56	7/32	5.56	1 1/2	38.10
3/8	9.52	3/8	9.52	7/8	22.22	1 1/2	1 1/2	7/32	5.56	7/32	5.56	1 1/2	38.10
3/8	9.52	3/8	9.52	29/32	23.02	1 1/2	1 1/2	7/32	5.56	7/32	5.56	1 1/2	38.10
3/8	9.52	3/8	9.52	15/16	23.81	1 1/2	1 1/2	7/32	5.56	7/32	5.56	1 1/2	38.10
3/8	9.52	3/8	9.52	31/32	24.61	1 1/2	1 1/2	7/32	5.56	7/32	5.56	1 1/2	38.10
3/8	9.52	3/8	9.52	1	25.40	1 1/2	1 1/2	7/32	5.56	7/32	5.56	1 1/2	38.10
3/8	9.52	3/8	9.52	1 1/8	28.57	1 1/2	1 1/2	7/32	5.56	7/32	5.56	1 1/2	38.10
3/8	9.52	3/8	9.52	1 1/4	31.75	1 1/2	1 1/2	7/32	5.56	7/32	5.56	1 1/2	38.10
3/16	4.76	7/8	22.22	1 1/8	28.57	1 3/8	1 3/8	7/32	5.56	7/32	5.56	1 1/2	38.10
7/32	5.56	7/8	22.22	1 1/8	28.57	1 3/8	1 3/8	7/32	5.56	7/32	5.56	1 1/2	38.10
1/4	6.35	7/8	22.22	1 1/8	28.57	1 3/8	1 3/8	7/32	5.56	7/32	5.56	1 1/2	38.10
9/32	7.14	7/8	22.22	1 1/8	28.57	1 3/8	1 3/8	7/32	5.56	7/32	5.56	1 1/2	38.10
5/16	7.94	7/8	22.22	1 1/8	28.57	1 3/8	1 3/8	7/32	5.56	7/32	5.56	1 1/2	38.10
11/32	8.73	7/8	22.22	1 1/8	28.57	1 3/8	1 3/8	7/32	5.56	7/32	5.56	1 1/2	38.10
3/8	9.52	7/8	22.22	1 1/8	28.57	1 3/8	1 3/8	7/32	5.56	7/32	5.56	1 1/2	38.10
13/32	10.32	7/8	22.22	1 1/8	28.57	1 3/8	1 3/8	7/32	5.56	7/32	5.56	1 1/2	38.10
7/16	11.11	7/8	22.22	1 1/8	28.57	1 3/8	1 3/8	7/32	5.56	7/32	5.56	1 1/2	38.10
15/32	11.91	7/8	22.22	1 1/8	28.57	1 3/8	1 3/8	7/32	5.56	7/32	5.56	1 1/2	38.10
1/2	12.70	7/8	22.22	1 1/8	28.57	1 3/8	1 3/8	7/32	5.56	7/32	5.56	1 1/2	38.10
17/32	13.49	7/8	22.22	1 1/8	28.57	1 3/8	1 3/8	7/32	5.56	7/32	5.56	1 1/2	38.10
9/16	14.29	7/8	22.22	1 1/8	28.57	1 3/8	1 3/8	7/32	5.56	7/32	5.56	1 1/2	38.10
19/32	15.08	7/8	22.22	1 1/8	28.57	1 3/8	1 3/8	7/32	5.56	7/32	5.56	1 1/2	38.10

www.globaltungsteels.com

B		E		D		M	A	L		T		C	
inch	mm	inch	mm	inch	mm	inch	inch	inch	mm	inch	mm	inch	mm
5/8	15.87	7/8	22.22	1 1/8	28.57	1 3/8	1 3/8	7/32	5.56	7/32	5.56	1 1/2	38.10
21/32	16.67	7/8	22.22	1 1/8	28.57	1 3/8	1 3/8	7/32	5.56	7/32	5.56	1 1/2	38.10
11/16	17.46	7/8	22.22	1 1/8	28.57	1 3/8	1 3/8	7/32	5.56	7/32	5.56	1 1/2	38.10
23/32	18.26	7/8	22.22	1 1/8	28.57	1 3/8	1 3/8	7/32	5.56	7/32	5.56	1 1/2	38.10
3/4	19.05	7/8	22.22	1 1/8	28.57	1 3/8	1 3/8	7/32	5.56	7/32	5.56	1 1/2	38.10
25/32	19.84	7/8	22.22	1 1/8	28.57	1 3/8	1 3/8	7/32	5.56	7/32	5.56	1 1/2	38.10
13/16	20.64	7/8	22.22	1 1/8	28.57	1 3/8	1 3/8	7/32	5.56	7/32	5.56	1 1/2	38.10
27/32	21.43	7/8	22.22	1 1/8	28.57	1 3/8	1 3/8	7/32	5.56	7/32	5.56	1 1/2	38.10
7/8	22.22	7/8	22.22	1 1/8	28.57	1 3/8	1 3/8	7/32	5.56	7/32	5.56	1 1/2	38.10
3/16	4.76	3/4	19.05	29/32	23.02	1 3/8	1 3/8	7/32	5.56	7/32	5.56	1 1/2	38.10
7/32	5.56	3/4	19.05	29/32	23.02	1 3/8	1 3/8	7/32	5.56	7/32	5.56	1 1/2	38.10
1/4	6.35	3/4	19.05	29/32	23.02	1 3/8	1 3/8	7/32	5.56	7/32	5.56	1 1/2	38.10
9/32	7.14	3/4	19.05	29/32	23.02	1 3/8	1 3/8	7/32	5.56	7/32	5.56	1 1/2	38.10
5/16	7.94	3/4	19.05	29/32	23.02	1 3/8	1 3/8	7/32	5.56	7/32	5.56	1 1/2	38.10
11/32	8.73	3/4	19.05	29/32	23.02	1 3/8	1 3/8	7/32	5.56	7/32	5.56	1 1/2	38.10
3/8	9.52	3/4	19.05	29/32	23.02	1 3/8	1 3/8	7/32	5.56	7/32	5.56	1 1/2	38.10
13/32	10.32	3/4	19.05	29/32	23.02	1 3/8	1 3/8	7/32	5.56	7/32	5.56	1 1/2	38.10
7/16	11.11	3/4	19.05	29/32	23.02	1 3/8	1 3/8	7/32	5.56	7/32	5.56	1 1/2	38.10
15/32	11.91	3/4	19.05	29/32	23.02	1 3/8	1 3/8	7/32	5.56	7/32	5.56	1 1/2	38.10
1/2	12.70	3/4	19.05	29/32	23.02	1 3/8	1 3/8	7/32	5.56	7/32	5.56	1 1/2	38.10
17/32	13.49	3/4	19.05	29/32	23.02	1 3/8	1 3/8	7/32	5.56	7/32	5.56	1 1/2	38.10
9/16	14.29	3/4	19.05	29/32	23.02	1 3/8	1 3/8	7/32	5.56	7/32	5.56	1 1/2	38.10
19/32	15.08	3/4	19.05	29/32	23.02	1 3/8	1 3/8	7/32	5.56	7/32	5.56	1 1/2	38.10
5/8	15.87	3/4	19.05	29/32	23.02	1 3/8	1 3/8	7/32	5.56	7/32	5.56	1 1/2	38.10
21/32	16.67	3/4	19.05	29/32	23.02	1 3/8	1 3/8	7/32	5.56	7/32	5.56	1 1/2	38.10
11/16	17.46	3/4	19.05	29/32	23.02	1 3/8	1 3/8	7/32	5.56	7/32	5.56	1 1/2	38.10
23/32	18.26	3/4	19.05	29/32	23.02	1 3/8	1 3/8	7/32	5.56	7/32	5.56	1 1/2	38.10
3/4	19.05	3/4	19.05	29/32	23.02	1 3/8	1 3/8	7/32	5.56	7/32	5.56	1 1/2	38.10
3/16	4.76	3/4	19.05	15/16	23.81	1 3/8	1 3/8	7/32	5.56	7/32	5.56	1 1/2	38.10
7/32	5.56	3/4	19.05	15/16	23.81	1 3/8	1 3/8	7/32	5.56	7/32	5.56	1 1/2	38.10
1/4	6.35	3/4	19.05	15/16	23.81	1 3/8	1 3/8	7/32	5.56	7/32	5.56	1 1/2	38.10
9/32	7.14	3/4	19.05	15/16	23.81	1 3/8	1 3/8	7/32	5.56	7/32	5.56	1 1/2	38.10
5/16	7.94	3/4	19.05	15/16	23.81	1 3/8	1 3/8	7/32	5.56	7/32	5.56	1 1/2	38.10
11/32	8.73	3/4	19.05	15/16	23.81	1 3/8	1 3/8	7/32	5.56	7/32	5.56	1 1/2	38.10
3/8	9.52	3/4	19.05	15/16	23.81	1 3/8	1 3/8	7/32	5.56	7/32	5.56	1 1/2	38.10
13/32	10.32	3/4	19.05	15/16	23.81	1 3/8	1 3/8	7/32	5.56	7/32	5.56	1 1/2	38.10
7/16	11.11	3/4	19.05	15/16	23.81	1 3/8	1 3/8	7/32	5.56	7/32	5.56	1 1/2	38.10
15/32	11.91	3/4	19.05	15/16	23.81	1 3/8	1 3/8	7/32	5.56	7/32	5.56	1 1/2	38.10
1/2	12.70	3/4	19.05	15/16	23.81	1 3/8	1 3/8	7/32	5.56	7/32	5.56	1 1/2	38.10
17/32	13.49	3/4	19.05	15/16	23.81	1 3/8	1 3/8	7/32	5.56	7/32	5.56	1 1/2	38.10
9/16	14.29	3/4	19.05	15/16	23.81	1 3/8	1 3/8	7/32	5.56	7/32	5.56	1 1/2	38.10
19/32	15.08	3/4	19.05	15/16	23.81	1 3/8	1 3/8	7/32	5.56	7/32	5.56	1 1/2	38.10
5/8	15.87	3/4	19.05	15/16	23.81	1 3/8	1 3/8	7/32	5.56	7/32	5.56	1 1/2	38.10
21/32	16.67	3/4	19.05	15/16	23.81	1 3/8	1 3/8	7/32	5.56	7/32	5.56	1 1/2	38.10
11/16	17.46	3/4	19.05	15/16	23.81	1 3/8	1 3/8	7/32	5.56	7/32	5.56	1 1/2	38.10

www.globaltungsteels.com

B		E		D		M	A	L		T		C	
inch	mm	inch	mm	inch	mm	inch	inch	inch	mm	inch	mm	inch	mm
23/32	18.26	3/4	19.05	15/16	23.81	1 3/8	1 3/8	7/32	5.56	7/32	5.56	1 1/2	38.10
3/4	19.05	3/4	19.05	15/16	23.81	1 3/8	1 3/8	7/32	5.56	7/32	5.56	1 1/2	38.10
3/16	4.76	3/4	19.05	31/32	24.61	1 3/8	1 3/8	7/32	5.56	7/32	5.56	1 1/2	38.10
7/32	5.56	3/4	19.05	31/32	24.61	1 3/8	1 3/8	7/32	5.56	7/32	5.56	1 1/2	38.10
1/4	6.35	3/4	19.05	31/32	24.61	1 3/8	1 3/8	7/32	5.56	7/32	5.56	1 1/2	38.10
9/32	7.14	3/4	19.05	31/32	24.61	1 3/8	1 3/8	7/32	5.56	7/32	5.56	1 1/2	38.10
5/16	7.94	3/4	19.05	31/32	24.61	1 3/8	1 3/8	7/32	5.56	7/32	5.56	1 1/2	38.10
11/32	8.73	3/4	19.05	31/32	24.61	1 3/8	1 3/8	7/32	5.56	7/32	5.56	1 1/2	38.10
3/8	9.52	3/4	19.05	31/32	24.61	1 3/8	1 3/8	7/32	5.56	7/32	5.56	1 1/2	38.10
13/32	10.32	3/4	19.05	31/32	24.61	1 3/8	1 3/8	7/32	5.56	7/32	5.56	1 1/2	38.10
7/16	11.11	3/4	19.05	31/32	24.61	1 3/8	1 3/8	7/32	5.56	7/32	5.56	1 1/2	38.10
15/32	11.91	3/4	19.05	31/32	24.61	1 3/8	1 3/8	7/32	5.56	7/32	5.56	1 1/2	38.10
1/2	12.70	3/4	19.05	31/32	24.61	1 3/8	1 3/8	7/32	5.56	7/32	5.56	1 1/2	38.10
17/32	13.49	3/4	19.05	31/32	24.61	1 3/8	1 3/8	7/32	5.56	7/32	5.56	1 1/2	38.10
9/16	14.29	3/4	19.05	31/32	24.61	1 3/8	1 3/8	7/32	5.56	7/32	5.56	1 1/2	38.10
19/32	15.08	3/4	19.05	31/32	24.61	1 3/8	1 3/8	7/32	5.56	7/32	5.56	1 1/2	38.10
5/8	15.87	3/4	19.05	31/32	24.61	1 3/8	1 3/8	7/32	5.56	7/32	5.56	1 1/2	38.10
21/32	16.67	3/4	19.05	31/32	24.61	1 3/8	1 3/8	7/32	5.56	7/32	5.56	1 1/2	38.10
11/16	17.46	3/4	19.05	31/32	24.61	1 3/8	1 3/8	7/32	5.56	7/32	5.56	1 1/2	38.10
23/32	18.26	3/4	19.05	31/32	24.61	1 3/8	1 3/8	7/32	5.56	7/32	5.56	1 1/2	38.10
3/4	19.05	3/4	19.05	31/32	24.61	1 3/8	1 3/8	7/32	5.56	7/32	5.56	1 1/2	38.10
3/16	4.76	3/4	19.05	1	25.40	1 3/8	1 3/8	7/32	5.56	7/32	5.56	1 1/2	38.10
7/32	5.56	3/4	19.05	1	25.40	1 3/8	1 3/8	7/32	5.56	7/32	5.56	1 1/2	38.10
1/4	6.35	3/4	19.05	1	25.40	1 3/8	1 3/8	7/32	5.56	7/32	5.56	1 1/2	38.10
9/32	7.14	3/4	19.05	1	25.40	1 3/8	1 3/8	7/32	5.56	7/32	5.56	1 1/2	38.10
5/16	7.94	3/4	19.05	1	25.40	1 3/8	1 3/8	7/32	5.56	7/32	5.56	1 1/2	38.10
11/32	8.73	3/4	19.05	1	25.40	1 3/8	1 3/8	7/32	5.56	7/32	5.56	1 1/2	38.10
3/8	9.52	3/4	19.05	1	25.40	1 3/8	1 3/8	7/32	5.56	7/32	5.56	1 1/2	38.10
13/32	10.32	3/4	19.05	1	25.40	1 3/8	1 3/8	7/32	5.56	7/32	5.56	1 1/2	38.10
7/16	11.11	3/4	19.05	1	25.40	1 3/8	1 3/8	7/32	5.56	7/32	5.56	1 1/2	38.10
15/32	11.91	3/4	19.05	1	25.40	1 3/8	1 3/8	7/32	5.56	7/32	5.56	1 1/2	38.10
1/2	12.70	3/4	19.05	1	25.40	1 3/8	1 3/8	7/32	5.56	7/32	5.56	1 1/2	38.10
17/32	13.49	3/4	19.05	1	25.40	1 3/8	1 3/8	7/32	5.56	7/32	5.56	1 1/2	38.10
9/16	14.29	3/4	19.05	1	25.40	1 3/8	1 3/8	7/32	5.56	7/32	5.56	1 1/2	38.10
19/32	15.08	3/4	19.05	1	25.40	1 3/8	1 3/8	7/32	5.56	7/32	5.56	1 1/2	38.10
5/8	15.87	3/4	19.05	1	25.40	1 3/8	1 3/8	7/32	5.56	7/32	5.56	1 1/2	38.10
21/32	16.67	3/4	19.05	1	25.40	1 3/8	1 3/8	7/32	5.56	7/32	5.56	1 1/2	38.10
11/16	17.46	3/4	19.05	1	25.40	1 3/8	1 3/8	7/32	5.56	7/32	5.56	1 1/2	38.10
23/32	18.26	3/4	19.05	1	25.40	1 3/8	1 3/8	7/32	5.56	7/32	5.56	1 1/2	38.10
3/4	19.05	3/4	19.05	1	25.40	1 3/8	1 3/8	7/32	5.56	7/32	5.56	1 1/2	38.10
3/16	4.76	3/4	19.05	1 1/8	28.57	1 3/8	1 3/8	7/32	5.56	7/32	5.56	1 1/2	38.10
7/32	5.56	3/4	19.05	1 1/8	28.57	1 3/8	1 3/8	7/32	5.56	7/32	5.56	1 1/2	38.10
1/4	6.35	3/4	19.05	1 1/8	28.57	1 3/8	1 3/8	7/32	5.56	7/32	5.56	1 1/2	38.10
9/32	7.14	3/4	19.05	1 1/8	28.57	1 3/8	1 3/8	7/32	5.56	7/32	5.56	1 1/2	38.10
5/16	7.94	3/4	19.05	1 1/8	28.57	1 3/8	1 3/8	7/32	5.56	7/32	5.56	1 1/2	38.10

www.globaltungsteens.com

B		E		D		M	A	L		T		C	
inch	mm	inch	mm	inch	mm	inch	inch	inch	mm	inch	mm	inch	mm
11/32	8.73	3/4	19.05	1 1/8	28.57	1 3/8	1 3/8	7/32	5.56	7/32	5.56	1 1/2	38.10
3/8	9.52	3/4	19.05	1 1/8	28.57	1 3/8	1 3/8	7/32	5.56	7/32	5.56	1 1/2	38.10
13/32	10.32	3/4	19.05	1 1/8	28.57	1 3/8	1 3/8	7/32	5.56	7/32	5.56	1 1/2	38.10
7/16	11.11	3/4	19.05	1 1/8	28.57	1 3/8	1 3/8	7/32	5.56	7/32	5.56	1 1/2	38.10
15/32	11.91	3/4	19.05	1 1/8	28.57	1 3/8	1 3/8	7/32	5.56	7/32	5.56	1 1/2	38.10
1/2	12.70	3/4	19.05	1 1/8	28.57	1 3/8	1 3/8	7/32	5.56	7/32	5.56	1 1/2	38.10
17/32	13.49	3/4	19.05	1 1/8	28.57	1 3/8	1 3/8	7/32	5.56	7/32	5.56	1 1/2	38.10
9/16	14.29	3/4	19.05	1 1/8	28.57	1 3/8	1 3/8	7/32	5.56	7/32	5.56	1 1/2	38.10
19/32	15.08	3/4	19.05	1 1/8	28.57	1 3/8	1 3/8	7/32	5.56	7/32	5.56	1 1/2	38.10
5/8	15.87	3/4	19.05	1 1/8	28.57	1 3/8	1 3/8	7/32	5.56	7/32	5.56	1 1/2	38.10
21/32	16.67	3/4	19.05	1 1/8	28.57	1 3/8	1 3/8	7/32	5.56	7/32	5.56	1 1/2	38.10
11/16	17.46	3/4	19.05	1 1/8	28.57	1 3/8	1 3/8	7/32	5.56	7/32	5.56	1 1/2	38.10
23/32	18.26	3/4	19.05	1 1/8	28.57	1 3/8	1 3/8	7/32	5.56	7/32	5.56	1 1/2	38.10
3/4	19.05	3/4	19.05	1 1/8	28.57	1 3/8	1 3/8	7/32	5.56	7/32	5.56	1 1/2	38.10
3/16	4.76	5/8	15.87	25/32	19.84	1 3/8	1 3/8	7/32	5.56	7/32	5.56	1 1/2	38.10
3/16	4.76	5/8	15.87	13/16	20.64	1 3/8	1 3/8	7/32	5.56	7/32	5.56	1 1/2	38.10
3/16	4.76	5/8	15.87	27/32	21.43	1 3/8	1 3/8	7/32	5.56	7/32	5.56	1 1/2	38.10
3/16	4.76	5/8	15.87	7/8	22.22	1 3/8	1 3/8	7/32	5.56	7/32	5.56	1 1/2	38.10
3/16	4.76	5/8	15.87	29/32	23.02	1 3/8	1 3/8	7/32	5.56	7/32	5.56	1 1/2	38.10
3/16	4.76	5/8	15.87	15/16	23.81	1 3/8	1 3/8	7/32	5.56	7/32	5.56	1 1/2	38.10
3/16	4.76	5/8	15.87	31/32	24.61	1 3/8	1 3/8	7/32	5.56	7/32	5.56	1 1/2	38.10
3/16	4.76	5/8	15.87	1	25.40	1 3/8	1 3/8	7/32	5.56	7/32	5.56	1 1/2	38.10
3/16	4.76	5/8	15.87	1 1/8	28.57	1 3/8	1 3/8	7/32	5.56	7/32	5.56	1 1/2	38.10
7/32	5.56	5/8	15.87	25/32	19.84	1 3/8	1 3/8	7/32	5.56	7/32	5.56	1 1/2	38.10
7/32	5.56	5/8	15.87	13/16	20.64	1 3/8	1 3/8	7/32	5.56	7/32	5.56	1 1/2	38.10
7/32	5.56	5/8	15.87	27/32	21.43	1 3/8	1 3/8	7/32	5.56	7/32	5.56	1 1/2	38.10
7/32	5.56	5/8	15.87	7/8	22.22	1 3/8	1 3/8	7/32	5.56	7/32	5.56	1 1/2	38.10
7/32	5.56	5/8	15.87	29/32	23.02	1 3/8	1 3/8	7/32	5.56	7/32	5.56	1 1/2	38.10
7/32	5.56	5/8	15.87	15/16	23.81	1 3/8	1 3/8	7/32	5.56	7/32	5.56	1 1/2	38.10
7/32	5.56	5/8	15.87	31/32	24.61	1 3/8	1 3/8	7/32	5.56	7/32	5.56	1 1/2	38.10
7/32	5.56	5/8	15.87	1	25.40	1 3/8	1 3/8	7/32	5.56	7/32	5.56	1 1/2	38.10
7/32	5.56	5/8	15.87	1 1/8	28.57	1 3/8	1 3/8	7/32	5.56	7/32	5.56	1 1/2	38.10
1/4	6.35	5/8	15.87	25/32	19.84	1 3/8	1 3/8	7/32	5.56	7/32	5.56	1 1/2	38.10
1/4	6.35	5/8	15.87	13/16	20.64	1 3/8	1 3/8	7/32	5.56	7/32	5.56	1 1/2	38.10
1/4	6.35	5/8	15.87	27/32	21.43	1 3/8	1 3/8	7/32	5.56	7/32	5.56	1 1/2	38.10
1/4	6.35	5/8	15.87	7/8	22.22	1 3/8	1 3/8	7/32	5.56	7/32	5.56	1 1/2	38.10
1/4	6.35	5/8	15.87	29/32	23.02	1 3/8	1 3/8	7/32	5.56	7/32	5.56	1 1/2	38.10
1/4	6.35	5/8	15.87	15/16	23.81	1 3/8	1 3/8	7/32	5.56	7/32	5.56	1 1/2	38.10
1/4	6.35	5/8	15.87	31/32	24.61	1 3/8	1 3/8	7/32	5.56	7/32	5.56	1 1/2	38.10
1/4	6.35	5/8	15.87	1	25.40	1 3/8	1 3/8	7/32	5.56	7/32	5.56	1 1/2	38.10
1/4	6.35	5/8	15.87	1 1/8	28.57	1 3/8	1 3/8	7/32	5.56	7/32	5.56	1 1/2	38.10
9/32	7.14	5/8	15.87	25/32	19.84	1 3/8	1 3/8	7/32	5.56	7/32	5.56	1 1/2	38.10
9/32	7.14	5/8	15.87	13/16	20.64	1 3/8	1 3/8	7/32	5.56	7/32	5.56	1 1/2	38.10
9/32	7.14	5/8	15.87	27/32	21.43	1 3/8	1 3/8	7/32	5.56	7/32	5.56	1 1/2	38.10
9/32	7.14	5/8	15.87	7/8	22.22	1 3/8	1 3/8	7/32	5.56	7/32	5.56	1 1/2	38.10

www.globaltungsters.com

B		E		D		M	A	L		T		C	
inch	mm	inch	mm	inch	mm	inch	inch	inch	mm	inch	mm	inch	mm
9/32	7.14	5/8	15.87	29/32	23.02	1 3/8	1 3/8	7/32	5.56	7/32	5.56	1 1/2	38.10
9/32	7.14	5/8	15.87	15/16	23.81	1 3/8	1 3/8	7/32	5.56	7/32	5.56	1 1/2	38.10
9/32	7.14	5/8	15.87	31/32	24.61	1 3/8	1 3/8	7/32	5.56	7/32	5.56	1 1/2	38.10
9/32	7.14	5/8	15.87	1	25.40	1 3/8	1 3/8	7/32	5.56	7/32	5.56	1 1/2	38.10
9/32	7.14	5/8	15.87	1 1/8	28.57	1 3/8	1 3/8	7/32	5.56	7/32	5.56	1 1/2	38.10
5/16	7.94	5/8	15.87	25/32	19.84	1 3/8	1 3/8	7/32	5.56	7/32	5.56	1 1/2	38.10
5/16	7.94	5/8	15.87	13/16	20.64	1 3/8	1 3/8	7/32	5.56	7/32	5.56	1 1/2	38.10
5/16	7.94	5/8	15.87	27/32	21.43	1 3/8	1 3/8	7/32	5.56	7/32	5.56	1 1/2	38.10
5/16	7.94	5/8	15.87	7/8	22.22	1 3/8	1 3/8	7/32	5.56	7/32	5.56	1 1/2	38.10
5/16	7.94	5/8	15.87	29/32	23.02	1 3/8	1 3/8	7/32	5.56	7/32	5.56	1 1/2	38.10
5/16	7.94	5/8	15.87	15/16	23.81	1 3/8	1 3/8	7/32	5.56	7/32	5.56	1 1/2	38.10
5/16	7.94	5/8	15.87	31/32	24.61	1 3/8	1 3/8	7/32	5.56	7/32	5.56	1 1/2	38.10
5/16	7.94	5/8	15.87	1	25.40	1 3/8	1 3/8	7/32	5.56	7/32	5.56	1 1/2	38.10
5/16	7.94	5/8	15.87	1 1/8	28.57	1 3/8	1 3/8	7/32	5.56	7/32	5.56	1 1/2	38.10
11/32	8.73	5/8	15.87	25/32	19.84	1 3/8	1 3/8	7/32	5.56	7/32	5.56	1 1/2	38.10
11/32	8.73	5/8	15.87	13/16	20.64	1 3/8	1 3/8	7/32	5.56	7/32	5.56	1 1/2	38.10
11/32	8.73	5/8	15.87	27/32	21.43	1 3/8	1 3/8	7/32	5.56	7/32	5.56	1 1/2	38.10
11/32	8.73	5/8	15.87	7/8	22.22	1 3/8	1 3/8	7/32	5.56	7/32	5.56	1 1/2	38.10
11/32	8.73	5/8	15.87	29/32	23.02	1 3/8	1 3/8	7/32	5.56	7/32	5.56	1 1/2	38.10
11/32	8.73	5/8	15.87	15/16	23.81	1 3/8	1 3/8	7/32	5.56	7/32	5.56	1 1/2	38.10
11/32	8.73	5/8	15.87	31/32	24.61	1 3/8	1 3/8	7/32	5.56	7/32	5.56	1 1/2	38.10
11/32	8.73	5/8	15.87	1	25.40	1 3/8	1 3/8	7/32	5.56	7/32	5.56	1 1/2	38.10
11/32	8.73	5/8	15.87	1 1/8	28.57	1 3/8	1 3/8	7/32	5.56	7/32	5.56	1 1/2	38.10
3/8	9.52	5/8	15.87	25/32	19.84	1 3/8	1 3/8	7/32	5.56	7/32	5.56	1 1/2	38.10
3/8	9.52	5/8	15.87	13/16	20.64	1 3/8	1 3/8	7/32	5.56	7/32	5.56	1 1/2	38.10
3/8	9.52	5/8	15.87	27/32	21.43	1 3/8	1 3/8	7/32	5.56	7/32	5.56	1 1/2	38.10
3/8	9.52	5/8	15.87	7/8	22.22	1 3/8	1 3/8	7/32	5.56	7/32	5.56	1 1/2	38.10
3/8	9.52	5/8	15.87	29/32	23.02	1 3/8	1 3/8	7/32	5.56	7/32	5.56	1 1/2	38.10
3/8	9.52	5/8	15.87	15/16	23.81	1 3/8	1 3/8	7/32	5.56	7/32	5.56	1 1/2	38.10
3/8	9.52	5/8	15.87	31/32	24.61	1 3/8	1 3/8	7/32	5.56	7/32	5.56	1 1/2	38.10
3/8	9.52	5/8	15.87	1	25.40	1 3/8	1 3/8	7/32	5.56	7/32	5.56	1 1/2	38.10
3/8	9.52	5/8	15.87	1 1/8	28.57	1 3/8	1 3/8	7/32	5.56	7/32	5.56	1 1/2	38.10
13/32	10.32	5/8	15.87	25/32	19.84	1 3/8	1 3/8	7/32	5.56	7/32	5.56	1 1/2	38.10
13/32	10.32	5/8	15.87	13/16	20.64	1 3/8	1 3/8	7/32	5.56	7/32	5.56	1 1/2	38.10
13/32	10.32	5/8	15.87	27/32	21.43	1 3/8	1 3/8	7/32	5.56	7/32	5.56	1 1/2	38.10
13/32	10.32	5/8	15.87	7/8	22.22	1 3/8	1 3/8	7/32	5.56	7/32	5.56	1 1/2	38.10
13/32	10.32	5/8	15.87	29/32	23.02	1 3/8	1 3/8	7/32	5.56	7/32	5.56	1 1/2	38.10
13/32	10.32	5/8	15.87	15/16	23.81	1 3/8	1 3/8	7/32	5.56	7/32	5.56	1 1/2	38.10
13/32	10.32	5/8	15.87	31/32	24.61	1 3/8	1 3/8	7/32	5.56	7/32	5.56	1 1/2	38.10
13/32	10.32	5/8	15.87	1	25.40	1 3/8	1 3/8	7/32	5.56	7/32	5.56	1 1/2	38.10
13/32	10.32	5/8	15.87	1 1/8	28.57	1 3/8	1 3/8	7/32	5.56	7/32	5.56	1 1/2	38.10
7/16	11.11	5/8	15.87	25/32	19.84	1 3/8	1 3/8	7/32	5.56	7/32	5.56	1 1/2	38.10
7/16	11.11	5/8	15.87	13/16	20.64	1 3/8	1 3/8	7/32	5.56	7/32	5.56	1 1/2	38.10
7/16	11.11	5/8	15.87	27/32	21.43	1 3/8	1 3/8	7/32	5.56	7/32	5.56	1 1/2	38.10
7/16	11.11	5/8	15.87	7/8	22.22	1 3/8	1 3/8	7/32	5.56	7/32	5.56	1 1/2	38.10

www.globaltungsten.com

B		E		D		M	A	L		T		C	
inch	mm	inch	mm	inch	mm	inch	inch	inch	mm	inch	mm	inch	mm
7/16	11.11	5/8	15.87	29/32	23.02	1 3/8	1 3/8	7/32	5.56	7/32	5.56	1 1/2	38.10
7/16	11.11	5/8	15.87	15/16	23.81	1 3/8	1 3/8	7/32	5.56	7/32	5.56	1 1/2	38.10
7/16	11.11	5/8	15.87	31/32	24.61	1 3/8	1 3/8	7/32	5.56	7/32	5.56	1 1/2	38.10
7/16	11.11	5/8	15.87	1	25.40	1 3/8	1 3/8	7/32	5.56	7/32	5.56	1 1/2	38.10
7/16	11.11	5/8	15.87	1 1/8	28.57	1 3/8	1 3/8	7/32	5.56	7/32	5.56	1 1/2	38.10
15/32	11.91	5/8	15.87	25/32	19.84	1 3/8	1 3/8	7/32	5.56	7/32	5.56	1 1/2	38.10
15/32	11.91	5/8	15.87	13/16	20.64	1 3/8	1 3/8	7/32	5.56	7/32	5.56	1 1/2	38.10
15/32	11.91	5/8	15.87	27/32	21.43	1 3/8	1 3/8	7/32	5.56	7/32	5.56	1 1/2	38.10
15/32	11.91	5/8	15.87	7/8	22.22	1 3/8	1 3/8	7/32	5.56	7/32	5.56	1 1/2	38.10
15/32	11.91	5/8	15.87	29/32	23.02	1 3/8	1 3/8	7/32	5.56	7/32	5.56	1 1/2	38.10
15/32	11.91	5/8	15.87	15/16	23.81	1 3/8	1 3/8	7/32	5.56	7/32	5.56	1 1/2	38.10
15/32	11.91	5/8	15.87	31/32	24.61	1 3/8	1 3/8	7/32	5.56	7/32	5.56	1 1/2	38.10
15/32	11.91	5/8	15.87	1	25.40	1 3/8	1 3/8	7/32	5.56	7/32	5.56	1 1/2	38.10
15/32	11.91	5/8	15.87	1 1/8	28.57	1 3/8	1 3/8	7/32	5.56	7/32	5.56	1 1/2	38.10
1/2	12.70	5/8	15.87	25/32	19.84	1 3/8	1 3/8	7/32	5.56	7/32	5.56	1 1/2	38.10
1/2	12.70	5/8	15.87	13/16	20.64	1 3/8	1 3/8	7/32	5.56	7/32	5.56	1 1/2	38.10
1/2	12.70	5/8	15.87	27/32	21.43	1 3/8	1 3/8	7/32	5.56	7/32	5.56	1 1/2	38.10
1/2	12.70	5/8	15.87	7/8	22.22	1 3/8	1 3/8	7/32	5.56	7/32	5.56	1 1/2	38.10
1/2	12.70	5/8	15.87	29/32	23.02	1 3/8	1 3/8	7/32	5.56	7/32	5.56	1 1/2	38.10
1/2	12.70	5/8	15.87	15/16	23.81	1 3/8	1 3/8	7/32	5.56	7/32	5.56	1 1/2	38.10
1/2	12.70	5/8	15.87	31/32	24.61	1 3/8	1 3/8	7/32	5.56	7/32	5.56	1 1/2	38.10
1/2	12.70	5/8	15.87	1	25.40	1 3/8	1 3/8	7/32	5.56	7/32	5.56	1 1/2	38.10
1/2	12.70	5/8	15.87	1 1/8	28.57	1 3/8	1 3/8	7/32	5.56	7/32	5.56	1 1/2	38.10
17/32	13.49	5/8	15.87	25/32	19.84	1 3/8	1 3/8	7/32	5.56	7/32	5.56	1 1/2	38.10
17/32	13.49	5/8	15.87	13/16	20.64	1 3/8	1 3/8	7/32	5.56	7/32	5.56	1 1/2	38.10
17/32	13.49	5/8	15.87	27/32	21.43	1 3/8	1 3/8	7/32	5.56	7/32	5.56	1 1/2	38.10
17/32	13.49	5/8	15.87	7/8	22.22	1 3/8	1 3/8	7/32	5.56	7/32	5.56	1 1/2	38.10
17/32	13.49	5/8	15.87	29/32	23.02	1 3/8	1 3/8	7/32	5.56	7/32	5.56	1 1/2	38.10
17/32	13.49	5/8	15.87	15/16	23.81	1 3/8	1 3/8	7/32	5.56	7/32	5.56	1 1/2	38.10
17/32	13.49	5/8	15.87	31/32	24.61	1 3/8	1 3/8	7/32	5.56	7/32	5.56	1 1/2	38.10
17/32	13.49	5/8	15.87	1	25.40	1 3/8	1 3/8	7/32	5.56	7/32	5.56	1 1/2	38.10
17/32	13.49	5/8	15.87	1 1/8	28.57	1 3/8	1 3/8	7/32	5.56	7/32	5.56	1 1/2	38.10
9/16	14.29	5/8	15.87	25/32	19.84	1 3/8	1 3/8	7/32	5.56	7/32	5.56	1 1/2	38.10
9/16	14.29	5/8	15.87	13/16	20.64	1 3/8	1 3/8	7/32	5.56	7/32	5.56	1 1/2	38.10
9/16	14.29	5/8	15.87	27/32	21.43	1 3/8	1 3/8	7/32	5.56	7/32	5.56	1 1/2	38.10
9/16	14.29	5/8	15.87	7/8	22.22	1 3/8	1 3/8	7/32	5.56	7/32	5.56	1 1/2	38.10
9/16	14.29	5/8	15.87	29/32	23.02	1 3/8	1 3/8	7/32	5.56	7/32	5.56	1 1/2	38.10
9/16	14.29	5/8	15.87	15/16	23.81	1 3/8	1 3/8	7/32	5.56	7/32	5.56	1 1/2	38.10
9/16	14.29	5/8	15.87	31/32	24.61	1 3/8	1 3/8	7/32	5.56	7/32	5.56	1 1/2	38.10
9/16	14.29	5/8	15.87	1	25.40	1 3/8	1 3/8	7/32	5.56	7/32	5.56	1 1/2	38.10
9/16	14.29	5/8	15.87	1 1/8	28.57	1 3/8	1 3/8	7/32	5.56	7/32	5.56	1 1/2	38.10
19/32	15.08	5/8	15.87	25/32	19.84	1 3/8	1 3/8	7/32	5.56	7/32	5.56	1 1/2	38.10
19/32	15.08	5/8	15.87	13/16	20.64	1 3/8	1 3/8	7/32	5.56	7/32	5.56	1 1/2	38.10
19/32	15.08	5/8	15.87	27/32	21.43	1 3/8	1 3/8	7/32	5.56	7/32	5.56	1 1/2	38.10
19/32	15.08	5/8	15.87	7/8	22.22	1 3/8	1 3/8	7/32	5.56	7/32	5.56	1 1/2	38.10

www.globaltungsten.com

B		E		D		M	A	L		T		C	
inch	mm	inch	mm	inch	mm	inch	inch	inch	mm	inch	mm	inch	mm
19/32	15.08	5/8	15.87	29/32	23.02	1 3/8	1 3/8	7/32	5.56	7/32	5.56	1 1/2	38.10
19/32	15.08	5/8	15.87	15/16	23.81	1 3/8	1 3/8	7/32	5.56	7/32	5.56	1 1/2	38.10
19/32	15.08	5/8	15.87	31/32	24.61	1 3/8	1 3/8	7/32	5.56	7/32	5.56	1 1/2	38.10
19/32	15.08	5/8	15.87	1	25.40	1 3/8	1 3/8	7/32	5.56	7/32	5.56	1 1/2	38.10
19/32	15.08	5/8	15.87	1 1/8	28.57	1 3/8	1 3/8	7/32	5.56	7/32	5.56	1 1/2	38.10
5/8	15.87	5/8	15.87	25/32	19.84	1 3/8	1 3/8	7/32	5.56	7/32	5.56	1 1/2	38.10
5/8	15.87	5/8	15.87	13/16	20.64	1 3/8	1 3/8	7/32	5.56	7/32	5.56	1 1/2	38.10
5/8	15.87	5/8	15.87	27/32	21.43	1 3/8	1 3/8	7/32	5.56	7/32	5.56	1 1/2	38.10
5/8	15.87	5/8	15.87	7/8	22.22	1 3/8	1 3/8	7/32	5.56	7/32	5.56	1 1/2	38.10
5/8	15.87	5/8	15.87	29/32	23.02	1 3/8	1 3/8	7/32	5.56	7/32	5.56	1 1/2	38.10
5/8	15.87	5/8	15.87	15/16	23.81	1 3/8	1 3/8	7/32	5.56	7/32	5.56	1 1/2	38.10
5/8	15.87	5/8	15.87	31/32	24.61	1 3/8	1 3/8	7/32	5.56	7/32	5.56	1 1/2	38.10
5/8	15.87	5/8	15.87	1	25.40	1 3/8	1 3/8	7/32	5.56	7/32	5.56	1 1/2	38.10
5/8	15.87	5/8	15.87	1 1/8	28.57	1 3/8	1 3/8	7/32	5.56	7/32	5.56	1 1/2	38.10
3/16	4.76	1/2	12.70	21/32	16.67	1 3/8	1 3/8	7/32	5.56	7/32	5.56	1 1/2	38.10
3/16	4.76	1/2	12.70	11/16	17.46	1 3/8	1 3/8	7/32	5.56	7/32	5.56	1 1/2	38.10
3/16	4.76	1/2	12.70	23/32	18.26	1 3/8	1 3/8	7/32	5.56	7/32	5.56	1 1/2	38.10
3/16	4.76	1/2	12.70	3/4	19.05	1 3/8	1 3/8	7/32	5.56	7/32	5.56	1 1/2	38.10
3/16	4.76	1/2	12.70	25/32	19.84	1 3/8	1 3/8	7/32	5.56	7/32	5.56	1 1/2	38.10
3/16	4.76	1/2	12.70	13/16	20.64	1 3/8	1 3/8	7/32	5.56	7/32	5.56	1 1/2	38.10
3/16	4.76	1/2	12.70	27/32	21.43	1 3/8	1 3/8	7/32	5.56	7/32	5.56	1 1/2	38.10
3/16	4.76	1/2	12.70	7/8	22.22	1 3/8	1 3/8	7/32	5.56	7/32	5.56	1 1/2	38.10
3/16	4.76	1/2	12.70	29/32	23.02	1 3/8	1 3/8	7/32	5.56	7/32	5.56	1 1/2	38.10
3/16	4.76	1/2	12.70	15/16	23.81	1 3/8	1 3/8	7/32	5.56	7/32	5.56	1 1/2	38.10
3/16	4.76	1/2	12.70	31/32	24.61	1 3/8	1 3/8	7/32	5.56	7/32	5.56	1 1/2	38.10
3/16	4.76	1/2	12.70	1	25.40	1 3/8	1 3/8	7/32	5.56	7/32	5.56	1 1/2	38.10
3/16	4.76	1/2	12.70	1 1/8	28.57	1 3/8	1 3/8	7/32	5.56	7/32	5.56	1 1/2	38.10
7/32	5.56	1/2	12.70	21/32	16.67	1 3/8	1 3/8	7/32	5.56	7/32	5.56	1 1/2	38.10
7/32	5.56	1/2	12.70	11/16	17.46	1 3/8	1 3/8	7/32	5.56	7/32	5.56	1 1/2	38.10
7/32	5.56	1/2	12.70	23/32	18.26	1 3/8	1 3/8	7/32	5.56	7/32	5.56	1 1/2	38.10
7/32	5.56	1/2	12.70	3/4	19.05	1 3/8	1 3/8	7/32	5.56	7/32	5.56	1 1/2	38.10
7/32	5.56	1/2	12.70	25/32	19.84	1 3/8	1 3/8	7/32	5.56	7/32	5.56	1 1/2	38.10
7/32	5.56	1/2	12.70	13/16	20.64	1 3/8	1 3/8	7/32	5.56	7/32	5.56	1 1/2	38.10
7/32	5.56	1/2	12.70	27/32	21.43	1 3/8	1 3/8	7/32	5.56	7/32	5.56	1 1/2	38.10
7/32	5.56	1/2	12.70	7/8	22.22	1 3/8	1 3/8	7/32	5.56	7/32	5.56	1 1/2	38.10
7/32	5.56	1/2	12.70	29/32	23.02	1 3/8	1 3/8	7/32	5.56	7/32	5.56	1 1/2	38.10
7/32	5.56	1/2	12.70	15/16	23.81	1 3/8	1 3/8	7/32	5.56	7/32	5.56	1 1/2	38.10
7/32	5.56	1/2	12.70	31/32	24.61	1 3/8	1 3/8	7/32	5.56	7/32	5.56	1 1/2	38.10
7/32	5.56	1/2	12.70	1	25.40	1 3/8	1 3/8	7/32	5.56	7/32	5.56	1 1/2	38.10
7/32	5.56	1/2	12.70	1 1/8	28.57	1 3/8	1 3/8	7/32	5.56	7/32	5.56	1 1/2	38.10
1/4	6.35	1/2	12.70	21/32	16.67	1 3/8	1 3/8	7/32	5.56	7/32	5.56	1 1/2	38.10
1/4	6.35	1/2	12.70	11/16	17.46	1 3/8	1 3/8	7/32	5.56	7/32	5.56	1 1/2	38.10
1/4	6.35	1/2	12.70	23/32	18.26	1 3/8	1 3/8	7/32	5.56	7/32	5.56	1 1/2	38.10
1/4	6.35	1/2	12.70	3/4	19.05	1 3/8	1 3/8	7/32	5.56	7/32	5.56	1 1/2	38.10
1/4	6.35	1/2	12.70	25/32	19.84	1 3/8	1 3/8	7/32	5.56	7/32	5.56	1 1/2	38.10

www.globaltungsteens.com

B		E		D		M	A	L		T		C	
inch	mm	inch	mm	inch	mm	inch	inch	inch	mm	inch	mm	inch	mm
1/4	6.35	1/2	12.70	13/16	20.64	1 3/8	1 3/8	7/32	5.56	7/32	5.56	1 1/2	38.10
1/4	6.35	1/2	12.70	27/32	21.43	1 3/8	1 3/8	7/32	5.56	7/32	5.56	1 1/2	38.10
1/4	6.35	1/2	12.70	7/8	22.22	1 3/8	1 3/8	7/32	5.56	7/32	5.56	1 1/2	38.10
1/4	6.35	1/2	12.70	29/32	23.02	1 3/8	1 3/8	7/32	5.56	7/32	5.56	1 1/2	38.10
1/4	6.35	1/2	12.70	15/16	23.81	1 3/8	1 3/8	7/32	5.56	7/32	5.56	1 1/2	38.10
1/4	6.35	1/2	12.70	31/32	24.61	1 3/8	1 3/8	7/32	5.56	7/32	5.56	1 1/2	38.10
1/4	6.35	1/2	12.70	1	25.40	1 3/8	1 3/8	7/32	5.56	7/32	5.56	1 1/2	38.10
1/4	6.35	1/2	12.70	1 1/8	28.57	1 3/8	1 3/8	7/32	5.56	7/32	5.56	1 1/2	38.10
9/32	7.14	1/2	12.70	21/32	16.67	1 3/8	1 3/8	7/32	5.56	7/32	5.56	1 1/2	38.10
9/32	7.14	1/2	12.70	11/16	17.46	1 3/8	1 3/8	7/32	5.56	7/32	5.56	1 1/2	38.10
9/32	7.14	1/2	12.70	23/32	18.26	1 3/8	1 3/8	7/32	5.56	7/32	5.56	1 1/2	38.10
9/32	7.14	1/2	12.70	3/4	19.05	1 3/8	1 3/8	7/32	5.56	7/32	5.56	1 1/2	38.10
9/32	7.14	1/2	12.70	25/32	19.84	1 3/8	1 3/8	7/32	5.56	7/32	5.56	1 1/2	38.10
9/32	7.14	1/2	12.70	13/16	20.64	1 3/8	1 3/8	7/32	5.56	7/32	5.56	1 1/2	38.10
9/32	7.14	1/2	12.70	27/32	21.43	1 3/8	1 3/8	7/32	5.56	7/32	5.56	1 1/2	38.10
9/32	7.14	1/2	12.70	7/8	22.22	1 3/8	1 3/8	7/32	5.56	7/32	5.56	1 1/2	38.10
9/32	7.14	1/2	12.70	29/32	23.02	1 3/8	1 3/8	7/32	5.56	7/32	5.56	1 1/2	38.10
9/32	7.14	1/2	12.70	15/16	23.81	1 3/8	1 3/8	7/32	5.56	7/32	5.56	1 1/2	38.10
9/32	7.14	1/2	12.70	31/32	24.61	1 3/8	1 3/8	7/32	5.56	7/32	5.56	1 1/2	38.10
9/32	7.14	1/2	12.70	1	25.40	1 3/8	1 3/8	7/32	5.56	7/32	5.56	1 1/2	38.10
9/32	7.14	1/2	12.70	1 1/8	28.57	1 3/8	1 3/8	7/32	5.56	7/32	5.56	1 1/2	38.10
5/16	7.94	1/2	12.70	21/32	16.67	1 3/8	1 3/8	7/32	5.56	7/32	5.56	1 1/2	38.10
5/16	7.94	1/2	12.70	11/16	17.46	1 3/8	1 3/8	7/32	5.56	7/32	5.56	1 1/2	38.10
5/16	7.94	1/2	12.70	23/32	18.26	1 3/8	1 3/8	7/32	5.56	7/32	5.56	1 1/2	38.10
5/16	7.94	1/2	12.70	3/4	19.05	1 3/8	1 3/8	7/32	5.56	7/32	5.56	1 1/2	38.10
5/16	7.94	1/2	12.70	25/32	19.84	1 3/8	1 3/8	7/32	5.56	7/32	5.56	1 1/2	38.10
5/16	7.94	1/2	12.70	13/16	20.64	1 3/8	1 3/8	7/32	5.56	7/32	5.56	1 1/2	38.10
5/16	7.94	1/2	12.70	27/32	21.43	1 3/8	1 3/8	7/32	5.56	7/32	5.56	1 1/2	38.10
5/16	7.94	1/2	12.70	7/8	22.22	1 3/8	1 3/8	7/32	5.56	7/32	5.56	1 1/2	38.10
5/16	7.94	1/2	12.70	29/32	23.02	1 3/8	1 3/8	7/32	5.56	7/32	5.56	1 1/2	38.10
5/16	7.94	1/2	12.70	15/16	23.81	1 3/8	1 3/8	7/32	5.56	7/32	5.56	1 1/2	38.10
5/16	7.94	1/2	12.70	31/32	24.61	1 3/8	1 3/8	7/32	5.56	7/32	5.56	1 1/2	38.10
5/16	7.94	1/2	12.70	1	25.40	1 3/8	1 3/8	7/32	5.56	7/32	5.56	1 1/2	38.10
5/16	7.94	1/2	12.70	1 1/8	28.57	1 3/8	1 3/8	7/32	5.56	7/32	5.56	1 1/2	38.10
11/32	8.73	1/2	12.70	21/32	16.67	1 3/8	1 3/8	7/32	5.56	7/32	5.56	1 1/2	38.10
11/32	8.73	1/2	12.70	11/16	17.46	1 3/8	1 3/8	7/32	5.56	7/32	5.56	1 1/2	38.10
11/32	8.73	1/2	12.70	23/32	18.26	1 3/8	1 3/8	7/32	5.56	7/32	5.56	1 1/2	38.10
11/32	8.73	1/2	12.70	3/4	19.05	1 3/8	1 3/8	7/32	5.56	7/32	5.56	1 1/2	38.10
11/32	8.73	1/2	12.70	25/32	19.84	1 3/8	1 3/8	7/32	5.56	7/32	5.56	1 1/2	38.10
11/32	8.73	1/2	12.70	13/16	20.64	1 3/8	1 3/8	7/32	5.56	7/32	5.56	1 1/2	38.10
11/32	8.73	1/2	12.70	27/32	21.43	1 3/8	1 3/8	7/32	5.56	7/32	5.56	1 1/2	38.10
11/32	8.73	1/2	12.70	7/8	22.22	1 3/8	1 3/8	7/32	5.56	7/32	5.56	1 1/2	38.10
11/32	8.73	1/2	12.70	29/32	23.02	1 3/8	1 3/8	7/32	5.56	7/32	5.56	1 1/2	38.10
11/32	8.73	1/2	12.70	15/16	23.81	1 3/8	1 3/8	7/32	5.56	7/32	5.56	1 1/2	38.10
11/32	8.73	1/2	12.70	31/32	24.61	1 3/8	1 3/8	7/32	5.56	7/32	5.56	1 1/2	38.10

www.globaltungsten.com

B		E		D		M	A	L		T		C	
inch	mm	inch	mm	inch	mm	inch	inch	inch	mm	inch	mm	inch	mm
11/32	8.73	1/2	12.70	1	25.40	1 3/8	1 3/8	7/32	5.56	7/32	5.56	1 1/2	38.10
11/32	8.73	1/2	12.70	1 1/8	28.57	1 3/8	1 3/8	7/32	5.56	7/32	5.56	1 1/2	38.10
3/8	9.52	1/2	12.70	21/32	16.67	1 3/8	1 3/8	7/32	5.56	7/32	5.56	1 1/2	38.10
3/8	9.52	1/2	12.70	11/16	17.46	1 3/8	1 3/8	7/32	5.56	7/32	5.56	1 1/2	38.10
3/8	9.52	1/2	12.70	23/32	18.26	1 3/8	1 3/8	7/32	5.56	7/32	5.56	1 1/2	38.10
3/8	9.52	1/2	12.70	3/4	19.05	1 3/8	1 3/8	7/32	5.56	7/32	5.56	1 1/2	38.10
3/8	9.52	1/2	12.70	25/32	19.84	1 3/8	1 3/8	7/32	5.56	7/32	5.56	1 1/2	38.10
3/8	9.52	1/2	12.70	13/16	20.64	1 3/8	1 3/8	7/32	5.56	7/32	5.56	1 1/2	38.10
3/8	9.52	1/2	12.70	27/32	21.43	1 3/8	1 3/8	7/32	5.56	7/32	5.56	1 1/2	38.10
3/8	9.52	1/2	12.70	7/8	22.22	1 3/8	1 3/8	7/32	5.56	7/32	5.56	1 1/2	38.10
3/8	9.52	1/2	12.70	29/32	23.02	1 3/8	1 3/8	7/32	5.56	7/32	5.56	1 1/2	38.10
3/8	9.52	1/2	12.70	15/16	23.81	1 3/8	1 3/8	7/32	5.56	7/32	5.56	1 1/2	38.10
3/8	9.52	1/2	12.70	31/32	24.61	1 3/8	1 3/8	7/32	5.56	7/32	5.56	1 1/2	38.10
3/8	9.52	1/2	12.70	1	25.40	1 3/8	1 3/8	7/32	5.56	7/32	5.56	1 1/2	38.10
3/8	9.52	1/2	12.70	1 1/8	28.57	1 3/8	1 3/8	7/32	5.56	7/32	5.56	1 1/2	38.10
13/32	10.32	1/2	12.70	21/32	16.67	1 3/8	1 3/8	7/32	5.56	7/32	5.56	1 1/2	38.10
13/32	10.32	1/2	12.70	11/16	17.46	1 3/8	1 3/8	7/32	5.56	7/32	5.56	1 1/2	38.10
13/32	10.32	1/2	12.70	23/32	18.26	1 3/8	1 3/8	7/32	5.56	7/32	5.56	1 1/2	38.10
13/32	10.32	1/2	12.70	3/4	19.05	1 3/8	1 3/8	7/32	5.56	7/32	5.56	1 1/2	38.10
13/32	10.32	1/2	12.70	25/32	19.84	1 3/8	1 3/8	7/32	5.56	7/32	5.56	1 1/2	38.10
13/32	10.32	1/2	12.70	13/16	20.64	1 3/8	1 3/8	7/32	5.56	7/32	5.56	1 1/2	38.10
13/32	10.32	1/2	12.70	27/32	21.43	1 3/8	1 3/8	7/32	5.56	7/32	5.56	1 1/2	38.10
13/32	10.32	1/2	12.70	7/8	22.22	1 3/8	1 3/8	7/32	5.56	7/32	5.56	1 1/2	38.10
13/32	10.32	1/2	12.70	29/32	23.02	1 3/8	1 3/8	7/32	5.56	7/32	5.56	1 1/2	38.10
13/32	10.32	1/2	12.70	15/16	23.81	1 3/8	1 3/8	7/32	5.56	7/32	5.56	1 1/2	38.10
13/32	10.32	1/2	12.70	31/32	24.61	1 3/8	1 3/8	7/32	5.56	7/32	5.56	1 1/2	38.10
13/32	10.32	1/2	12.70	1	25.40	1 3/8	1 3/8	7/32	5.56	7/32	5.56	1 1/2	38.10
13/32	10.32	1/2	12.70	1 1/8	28.57	1 3/8	1 3/8	7/32	5.56	7/32	5.56	1 1/2	38.10
7/16	11.11	1/2	12.70	21/32	16.67	1 3/8	1 3/8	7/32	5.56	7/32	5.56	1 1/2	38.10
7/16	11.11	1/2	12.70	11/16	17.46	1 3/8	1 3/8	7/32	5.56	7/32	5.56	1 1/2	38.10
7/16	11.11	1/2	12.70	23/32	18.26	1 3/8	1 3/8	7/32	5.56	7/32	5.56	1 1/2	38.10
7/16	11.11	1/2	12.70	3/4	19.05	1 3/8	1 3/8	7/32	5.56	7/32	5.56	1 1/2	38.10
7/16	11.11	1/2	12.70	25/32	19.84	1 3/8	1 3/8	7/32	5.56	7/32	5.56	1 1/2	38.10
7/16	11.11	1/2	12.70	13/16	20.64	1 3/8	1 3/8	7/32	5.56	7/32	5.56	1 1/2	38.10
7/16	11.11	1/2	12.70	27/32	21.43	1 3/8	1 3/8	7/32	5.56	7/32	5.56	1 1/2	38.10
7/16	11.11	1/2	12.70	7/8	22.22	1 3/8	1 3/8	7/32	5.56	7/32	5.56	1 1/2	38.10
7/16	11.11	1/2	12.70	29/32	23.02	1 3/8	1 3/8	7/32	5.56	7/32	5.56	1 1/2	38.10
7/16	11.11	1/2	12.70	15/16	23.81	1 3/8	1 3/8	7/32	5.56	7/32	5.56	1 1/2	38.10
7/16	11.11	1/2	12.70	31/32	24.61	1 3/8	1 3/8	7/32	5.56	7/32	5.56	1 1/2	38.10
7/16	11.11	1/2	12.70	1	25.40	1 3/8	1 3/8	7/32	5.56	7/32	5.56	1 1/2	38.10
7/16	11.11	1/2	12.70	1 1/8	28.57	1 3/8	1 3/8	7/32	5.56	7/32	5.56	1 1/2	38.10
15/32	11.91	1/2	12.70	21/32	16.67	1 3/8	1 3/8	7/32	5.56	7/32	5.56	1 1/2	38.10
15/32	11.91	1/2	12.70	11/16	17.46	1 3/8	1 3/8	7/32	5.56	7/32	5.56	1 1/2	38.10
15/32	11.91	1/2	12.70	23/32	18.26	1 3/8	1 3/8	7/32	5.56	7/32	5.56	1 1/2	38.10
15/32	11.91	1/2	12.70	3/4	19.05	1 3/8	1 3/8	7/32	5.56	7/32	5.56	1 1/2	38.10

www.globaltungsteins.com

B		E		D		M	A	L		T		C	
inch	mm	inch	mm	inch	mm	inch	inch	inch	mm	inch	mm	inch	mm
15/32	11.91	1/2	12.70	25/32	19.84	1 3/8	1 3/8	7/32	5.56	7/32	5.56	1 1/2	38.10
15/32	11.91	1/2	12.70	13/16	20.64	1 3/8	1 3/8	7/32	5.56	7/32	5.56	1 1/2	38.10
15/32	11.91	1/2	12.70	27/32	21.43	1 3/8	1 3/8	7/32	5.56	7/32	5.56	1 1/2	38.10
15/32	11.91	1/2	12.70	7/8	22.22	1 3/8	1 3/8	7/32	5.56	7/32	5.56	1 1/2	38.10
15/32	11.91	1/2	12.70	29/32	23.02	1 3/8	1 3/8	7/32	5.56	7/32	5.56	1 1/2	38.10
15/32	11.91	1/2	12.70	15/16	23.81	1 3/8	1 3/8	7/32	5.56	7/32	5.56	1 1/2	38.10
15/32	11.91	1/2	12.70	31/32	24.61	1 3/8	1 3/8	7/32	5.56	7/32	5.56	1 1/2	38.10
15/32	11.91	1/2	12.70	1	25.40	1 3/8	1 3/8	7/32	5.56	7/32	5.56	1 1/2	38.10
15/32	11.91	1/2	12.70	1 1/8	28.57	1 3/8	1 3/8	7/32	5.56	7/32	5.56	1 1/2	38.10
1/2	12.70	1/2	12.70	21/32	16.67	1 3/8	1 3/8	7/32	5.56	7/32	5.56	1 1/2	38.10
1/2	12.70	1/2	12.70	11/16	17.46	1 3/8	1 3/8	7/32	5.56	7/32	5.56	1 1/2	38.10
1/2	12.70	1/2	12.70	23/32	18.26	1 3/8	1 3/8	7/32	5.56	7/32	5.56	1 1/2	38.10
1/2	12.70	1/2	12.70	3/4	19.05	1 3/8	1 3/8	7/32	5.56	7/32	5.56	1 1/2	38.10
1/2	12.70	1/2	12.70	25/32	19.84	1 3/8	1 3/8	7/32	5.56	7/32	5.56	1 1/2	38.10
1/2	12.70	1/2	12.70	13/16	20.64	1 3/8	1 3/8	7/32	5.56	7/32	5.56	1 1/2	38.10
1/2	12.70	1/2	12.70	27/32	21.43	1 3/8	1 3/8	7/32	5.56	7/32	5.56	1 1/2	38.10
1/2	12.70	1/2	12.70	7/8	22.22	1 3/8	1 3/8	7/32	5.56	7/32	5.56	1 1/2	38.10
1/2	12.70	1/2	12.70	29/32	23.02	1 3/8	1 3/8	7/32	5.56	7/32	5.56	1 1/2	38.10
1/2	12.70	1/2	12.70	15/16	23.81	1 3/8	1 3/8	7/32	5.56	7/32	5.56	1 1/2	38.10
1/2	12.70	1/2	12.70	31/32	24.61	1 3/8	1 3/8	7/32	5.56	7/32	5.56	1 1/2	38.10
1/2	12.70	1/2	12.70	1	25.40	1 3/8	1 3/8	7/32	5.56	7/32	5.56	1 1/2	38.10
1/2	12.70	1/2	12.70	1 1/8	28.57	1 3/8	1 3/8	7/32	5.56	7/32	5.56	1 1/2	38.10
3/16	4.76	3/8	9.52	19/32	15.08	1 3/8	1 3/8	7/32	5.56	7/32	5.56	1 1/2	38.10
3/16	4.76	3/8	9.52	5/8	15.87	1 3/8	1 3/8	7/32	5.56	7/32	5.56	1 1/2	38.10
3/16	4.76	3/8	9.52	21/32	16.67	1 3/8	1 3/8	7/32	5.56	7/32	5.56	1 1/2	38.10
3/16	4.76	3/8	9.52	11/16	17.46	1 3/8	1 3/8	7/32	5.56	7/32	5.56	1 1/2	38.10
3/16	4.76	3/8	9.52	23/32	18.26	1 3/8	1 3/8	7/32	5.56	7/32	5.56	1 1/2	38.10
3/16	4.76	3/8	9.52	3/4	19.05	1 3/8	1 3/8	7/32	5.56	7/32	5.56	1 1/2	38.10
3/16	4.76	3/8	9.52	25/32	19.84	1 3/8	1 3/8	7/32	5.56	7/32	5.56	1 1/2	38.10
3/16	4.76	3/8	9.52	13/16	20.64	1 3/8	1 3/8	7/32	5.56	7/32	5.56	1 1/2	38.10
3/16	4.76	3/8	9.52	27/32	21.43	1 3/8	1 3/8	7/32	5.56	7/32	5.56	1 1/2	38.10
3/16	4.76	3/8	9.52	7/8	22.22	1 3/8	1 3/8	7/32	5.56	7/32	5.56	1 1/2	38.10
3/16	4.76	3/8	9.52	29/32	23.02	1 3/8	1 3/8	7/32	5.56	7/32	5.56	1 1/2	38.10
3/16	4.76	3/8	9.52	15/16	23.81	1 3/8	1 3/8	7/32	5.56	7/32	5.56	1 1/2	38.10
3/16	4.76	3/8	9.52	31/32	24.61	1 3/8	1 3/8	7/32	5.56	7/32	5.56	1 1/2	38.10
3/16	4.76	3/8	9.52	1	25.40	1 3/8	1 3/8	7/32	5.56	7/32	5.56	1 1/2	38.10
3/16	4.76	3/8	9.52	1 1/8	28.57	1 3/8	1 3/8	7/32	5.56	7/32	5.56	1 1/2	38.10
7/32	5.56	3/8	9.52	19/32	15.08	1 3/8	1 3/8	7/32	5.56	7/32	5.56	1 1/2	38.10
7/32	5.56	3/8	9.52	5/8	15.87	1 3/8	1 3/8	7/32	5.56	7/32	5.56	1 1/2	38.10
7/32	5.56	3/8	9.52	21/32	16.67	1 3/8	1 3/8	7/32	5.56	7/32	5.56	1 1/2	38.10
7/32	5.56	3/8	9.52	11/16	17.46	1 3/8	1 3/8	7/32	5.56	7/32	5.56	1 1/2	38.10
7/32	5.56	3/8	9.52	23/32	18.26	1 3/8	1 3/8	7/32	5.56	7/32	5.56	1 1/2	38.10
7/32	5.56	3/8	9.52	3/4	19.05	1 3/8	1 3/8	7/32	5.56	7/32	5.56	1 1/2	38.10
7/32	5.56	3/8	9.52	25/32	19.84	1 3/8	1 3/8	7/32	5.56	7/32	5.56	1 1/2	38.10
7/32	5.56	3/8	9.52	13/16	20.64	1 3/8	1 3/8	7/32	5.56	7/32	5.56	1 1/2	38.10

www.globaltungsters.com

B		E		D		M	A	L		T		C	
inch	mm	inch	mm	inch	mm	inch	inch	inch	mm	inch	mm	inch	mm
7/32	5.56	3/8	9.52	27/32	21.43	1 3/8	1 3/8	7/32	5.56	7/32	5.56	1 1/2	38.10
7/32	5.56	3/8	9.52	7/8	22.22	1 3/8	1 3/8	7/32	5.56	7/32	5.56	1 1/2	38.10
7/32	5.56	3/8	9.52	29/32	23.02	1 3/8	1 3/8	7/32	5.56	7/32	5.56	1 1/2	38.10
7/32	5.56	3/8	9.52	15/16	23.81	1 3/8	1 3/8	7/32	5.56	7/32	5.56	1 1/2	38.10
7/32	5.56	3/8	9.52	31/32	24.61	1 3/8	1 3/8	7/32	5.56	7/32	5.56	1 1/2	38.10
7/32	5.56	3/8	9.52	1	25.40	1 3/8	1 3/8	7/32	5.56	7/32	5.56	1 1/2	38.10
7/32	5.56	3/8	9.52	1 1/8	28.57	1 3/8	1 3/8	7/32	5.56	7/32	5.56	1 1/2	38.10
1/4	6.35	3/8	9.52	19/32	15.08	1 3/8	1 3/8	7/32	5.56	7/32	5.56	1 1/2	38.10
1/4	6.35	3/8	9.52	5/8	15.87	1 3/8	1 3/8	7/32	5.56	7/32	5.56	1 1/2	38.10
1/4	6.35	3/8	9.52	21/32	16.67	1 3/8	1 3/8	7/32	5.56	7/32	5.56	1 1/2	38.10
1/4	6.35	3/8	9.52	11/16	17.46	1 3/8	1 3/8	7/32	5.56	7/32	5.56	1 1/2	38.10
1/4	6.35	3/8	9.52	23/32	18.26	1 3/8	1 3/8	7/32	5.56	7/32	5.56	1 1/2	38.10
1/4	6.35	3/8	9.52	3/4	19.05	1 3/8	1 3/8	7/32	5.56	7/32	5.56	1 1/2	38.10
1/4	6.35	3/8	9.52	25/32	19.84	1 3/8	1 3/8	7/32	5.56	7/32	5.56	1 1/2	38.10
1/4	6.35	3/8	9.52	13/16	20.64	1 3/8	1 3/8	7/32	5.56	7/32	5.56	1 1/2	38.10
1/4	6.35	3/8	9.52	27/32	21.43	1 3/8	1 3/8	7/32	5.56	7/32	5.56	1 1/2	38.10
1/4	6.35	3/8	9.52	7/8	22.22	1 3/8	1 3/8	7/32	5.56	7/32	5.56	1 1/2	38.10
1/4	6.35	3/8	9.52	29/32	23.02	1 3/8	1 3/8	7/32	5.56	7/32	5.56	1 1/2	38.10
1/4	6.35	3/8	9.52	15/16	23.81	1 3/8	1 3/8	7/32	5.56	7/32	5.56	1 1/2	38.10
1/4	6.35	3/8	9.52	31/32	24.61	1 3/8	1 3/8	7/32	5.56	7/32	5.56	1 1/2	38.10
1/4	6.35	3/8	9.52	1	25.40	1 3/8	1 3/8	7/32	5.56	7/32	5.56	1 1/2	38.10
1/4	6.35	3/8	9.52	1 1/8	28.57	1 3/8	1 3/8	7/32	5.56	7/32	5.56	1 1/2	38.10
9/32	7.14	3/8	9.52	19/32	15.08	1 3/8	1 3/8	7/32	5.56	7/32	5.56	1 1/2	38.10
9/32	7.14	3/8	9.52	5/8	15.87	1 3/8	1 3/8	7/32	5.56	7/32	5.56	1 1/2	38.10
9/32	7.14	3/8	9.52	21/32	16.67	1 3/8	1 3/8	7/32	5.56	7/32	5.56	1 1/2	38.10
9/32	7.14	3/8	9.52	11/16	17.46	1 3/8	1 3/8	7/32	5.56	7/32	5.56	1 1/2	38.10
9/32	7.14	3/8	9.52	23/32	18.26	1 3/8	1 3/8	7/32	5.56	7/32	5.56	1 1/2	38.10
9/32	7.14	3/8	9.52	3/4	19.05	1 3/8	1 3/8	7/32	5.56	7/32	5.56	1 1/2	38.10
9/32	7.14	3/8	9.52	25/32	19.84	1 3/8	1 3/8	7/32	5.56	7/32	5.56	1 1/2	38.10
9/32	7.14	3/8	9.52	13/16	20.64	1 3/8	1 3/8	7/32	5.56	7/32	5.56	1 1/2	38.10
9/32	7.14	3/8	9.52	27/32	21.43	1 3/8	1 3/8	7/32	5.56	7/32	5.56	1 1/2	38.10
9/32	7.14	3/8	9.52	7/8	22.22	1 3/8	1 3/8	7/32	5.56	7/32	5.56	1 1/2	38.10
9/32	7.14	3/8	9.52	29/32	23.02	1 3/8	1 3/8	7/32	5.56	7/32	5.56	1 1/2	38.10
9/32	7.14	3/8	9.52	15/16	23.81	1 3/8	1 3/8	7/32	5.56	7/32	5.56	1 1/2	38.10
9/32	7.14	3/8	9.52	31/32	24.61	1 3/8	1 3/8	7/32	5.56	7/32	5.56	1 1/2	38.10
9/32	7.14	3/8	9.52	1	25.40	1 3/8	1 3/8	7/32	5.56	7/32	5.56	1 1/2	38.10
9/32	7.14	3/8	9.52	1 1/8	28.57	1 3/8	1 3/8	7/32	5.56	7/32	5.56	1 1/2	38.10
5/16	7.94	3/8	9.52	19/32	15.08	1 3/8	1 3/8	7/32	5.56	7/32	5.56	1 1/2	38.10
5/16	7.94	3/8	9.52	5/8	15.87	1 3/8	1 3/8	7/32	5.56	7/32	5.56	1 1/2	38.10
5/16	7.94	3/8	9.52	21/32	16.67	1 3/8	1 3/8	7/32	5.56	7/32	5.56	1 1/2	38.10
5/16	7.94	3/8	9.52	11/16	17.46	1 3/8	1 3/8	7/32	5.56	7/32	5.56	1 1/2	38.10
5/16	7.94	3/8	9.52	23/32	18.26	1 3/8	1 3/8	7/32	5.56	7/32	5.56	1 1/2	38.10
5/16	7.94	3/8	9.52	3/4	19.05	1 3/8	1 3/8	7/32	5.56	7/32	5.56	1 1/2	38.10
5/16	7.94	3/8	9.52	25/32	19.84	1 3/8	1 3/8	7/32	5.56	7/32	5.56	1 1/2	38.10
5/16	7.94	3/8	9.52	13/16	20.64	1 3/8	1 3/8	7/32	5.56	7/32	5.56	1 1/2	38.10

www.globaltungsteels.com

B		E		D		M	A	L		T		C	
inch	mm	inch	mm	inch	mm	inch	inch	inch	mm	inch	mm	inch	mm
5/16	7.94	3/8	9.52	27/32	21.43	1 3/8	1 3/8	7/32	5.56	7/32	5.56	1 1/2	38.10
5/16	7.94	3/8	9.52	7/8	22.22	1 3/8	1 3/8	7/32	5.56	7/32	5.56	1 1/2	38.10
5/16	7.94	3/8	9.52	29/32	23.02	1 3/8	1 3/8	7/32	5.56	7/32	5.56	1 1/2	38.10
5/16	7.94	3/8	9.52	15/16	23.81	1 3/8	1 3/8	7/32	5.56	7/32	5.56	1 1/2	38.10
5/16	7.94	3/8	9.52	31/32	24.61	1 3/8	1 3/8	7/32	5.56	7/32	5.56	1 1/2	38.10
5/16	7.94	3/8	9.52	1	25.40	1 3/8	1 3/8	7/32	5.56	7/32	5.56	1 1/2	38.10
5/16	7.94	3/8	9.52	1 1/8	28.57	1 3/8	1 3/8	7/32	5.56	7/32	5.56	1 1/2	38.10
11/32	8.73	3/8	9.52	19/32	15.08	1 3/8	1 3/8	7/32	5.56	7/32	5.56	1 1/2	38.10
11/32	8.73	3/8	9.52	5/8	15.87	1 3/8	1 3/8	7/32	5.56	7/32	5.56	1 1/2	38.10
11/32	8.73	3/8	9.52	21/32	16.67	1 3/8	1 3/8	7/32	5.56	7/32	5.56	1 1/2	38.10
11/32	8.73	3/8	9.52	11/16	17.46	1 3/8	1 3/8	7/32	5.56	7/32	5.56	1 1/2	38.10
11/32	8.73	3/8	9.52	23/32	18.26	1 3/8	1 3/8	7/32	5.56	7/32	5.56	1 1/2	38.10
11/32	8.73	3/8	9.52	3/4	19.05	1 3/8	1 3/8	7/32	5.56	7/32	5.56	1 1/2	38.10
11/32	8.73	3/8	9.52	25/32	19.84	1 3/8	1 3/8	7/32	5.56	7/32	5.56	1 1/2	38.10
11/32	8.73	3/8	9.52	13/16	20.64	1 3/8	1 3/8	7/32	5.56	7/32	5.56	1 1/2	38.10
11/32	8.73	3/8	9.52	27/32	21.43	1 3/8	1 3/8	7/32	5.56	7/32	5.56	1 1/2	38.10
11/32	8.73	3/8	9.52	7/8	22.22	1 3/8	1 3/8	7/32	5.56	7/32	5.56	1 1/2	38.10
11/32	8.73	3/8	9.52	29/32	23.02	1 3/8	1 3/8	7/32	5.56	7/32	5.56	1 1/2	38.10
11/32	8.73	3/8	9.52	15/16	23.81	1 3/8	1 3/8	7/32	5.56	7/32	5.56	1 1/2	38.10
11/32	8.73	3/8	9.52	31/32	24.61	1 3/8	1 3/8	7/32	5.56	7/32	5.56	1 1/2	38.10
11/32	8.73	3/8	9.52	1	25.40	1 3/8	1 3/8	7/32	5.56	7/32	5.56	1 1/2	38.10
11/32	8.73	3/8	9.52	1 1/8	28.57	1 3/8	1 3/8	7/32	5.56	7/32	5.56	1 1/2	38.10
3/8	9.52	3/8	9.52	19/32	15.08	1 3/8	1 3/8	7/32	5.56	7/32	5.56	1 1/2	38.10
3/8	9.52	3/8	9.52	5/8	15.87	1 3/8	1 3/8	7/32	5.56	7/32	5.56	1 1/2	38.10
3/8	9.52	3/8	9.52	21/32	16.67	1 3/8	1 3/8	7/32	5.56	7/32	5.56	1 1/2	38.10
3/8	9.52	3/8	9.52	11/16	17.46	1 3/8	1 3/8	7/32	5.56	7/32	5.56	1 1/2	38.10
3/8	9.52	3/8	9.52	23/32	18.26	1 3/8	1 3/8	7/32	5.56	7/32	5.56	1 1/2	38.10
3/8	9.52	3/8	9.52	3/4	19.05	1 3/8	1 3/8	7/32	5.56	7/32	5.56	1 1/2	38.10
3/8	9.52	3/8	9.52	25/32	19.84	1 3/8	1 3/8	7/32	5.56	7/32	5.56	1 1/2	38.10
3/8	9.52	3/8	9.52	13/16	20.64	1 3/8	1 3/8	7/32	5.56	7/32	5.56	1 1/2	38.10
3/8	9.52	3/8	9.52	27/32	21.43	1 3/8	1 3/8	7/32	5.56	7/32	5.56	1 1/2	38.10
3/8	9.52	3/8	9.52	7/8	22.22	1 3/8	1 3/8	7/32	5.56	7/32	5.56	1 1/2	38.10
3/8	9.52	3/8	9.52	29/32	23.02	1 3/8	1 3/8	7/32	5.56	7/32	5.56	1 1/2	38.10
3/8	9.52	3/8	9.52	15/16	23.81	1 3/8	1 3/8	7/32	5.56	7/32	5.56	1 1/2	38.10
3/8	9.52	3/8	9.52	31/32	24.61	1 3/8	1 3/8	7/32	5.56	7/32	5.56	1 1/2	38.10
3/8	9.52	3/8	9.52	1	25.40	1 3/8	1 3/8	7/32	5.56	7/32	5.56	1 1/2	38.10
3/8	9.52	3/8	9.52	1 1/8	28.57	1 3/8	1 3/8	7/32	5.56	7/32	5.56	1 1/2	38.10
3/16	4.76	3/4	19.05	29/32	23.02	1 1/4	1 1/4	7/32	5.56	7/32	5.56	1 1/4	31.75
7/32	5.56	3/4	19.05	29/32	23.02	1 1/4	1 1/4	7/32	5.56	7/32	5.56	1 1/4	31.75
1/4	6.35	3/4	19.05	29/32	23.02	1 1/4	1 1/4	7/32	5.56	7/32	5.56	1 1/4	31.75
9/32	7.14	3/4	19.05	29/32	23.02	1 1/4	1 1/4	7/32	5.56	7/32	5.56	1 1/4	31.75
5/16	7.94	3/4	19.05	29/32	23.02	1 1/4	1 1/4	7/32	5.56	7/32	5.56	1 1/4	31.75
11/32	8.73	3/4	19.05	29/32	23.02	1 1/4	1 1/4	7/32	5.56	7/32	5.56	1 1/4	31.75
3/8	9.52	3/4	19.05	29/32	23.02	1 1/4	1 1/4	7/32	5.56	7/32	5.56	1 1/4	31.75
13/32	10.32	3/4	19.05	29/32	23.02	1 1/4	1 1/4	7/32	5.56	7/32	5.56	1 1/4	31.75

www.globaltungsteels.com

B		E		D		M	A	L		T		C	
inch	mm	inch	mm	inch	mm	inch	inch	inch	mm	inch	mm	inch	mm
7/16	11.11	3/4	19.05	29/32	23.02	1 1/4	1 1/4	7/32	5.56	7/32	5.56	1 1/4	31.75
15/32	11.91	3/4	19.05	29/32	23.02	1 1/4	1 1/4	7/32	5.56	7/32	5.56	1 1/4	31.75
1/2	12.70	3/4	19.05	29/32	23.02	1 1/4	1 1/4	7/32	5.56	7/32	5.56	1 1/4	31.75
17/32	13.49	3/4	19.05	29/32	23.02	1 1/4	1 1/4	7/32	5.56	7/32	5.56	1 1/4	31.75
9/16	14.29	3/4	19.05	29/32	23.02	1 1/4	1 1/4	7/32	5.56	7/32	5.56	1 1/4	31.75
19/32	15.08	3/4	19.05	29/32	23.02	1 1/4	1 1/4	7/32	5.56	7/32	5.56	1 1/4	31.75
5/8	15.87	3/4	19.05	29/32	23.02	1 1/4	1 1/4	7/32	5.56	7/32	5.56	1 1/4	31.75
21/32	16.67	3/4	19.05	29/32	23.02	1 1/4	1 1/4	7/32	5.56	7/32	5.56	1 1/4	31.75
11/16	17.46	3/4	19.05	29/32	23.02	1 1/4	1 1/4	7/32	5.56	7/32	5.56	1 1/4	31.75
23/32	18.26	3/4	19.05	29/32	23.02	1 1/4	1 1/4	7/32	5.56	7/32	5.56	1 1/4	31.75
3/4	19.05	3/4	19.05	29/32	23.02	1 1/4	1 1/4	7/32	5.56	7/32	5.56	1 1/4	31.75
3/16	4.76	3/4	19.05	15/16	23.81	1 1/4	1 1/4	7/32	5.56	7/32	5.56	1 1/4	31.75
7/32	5.56	3/4	19.05	15/16	23.81	1 1/4	1 1/4	7/32	5.56	7/32	5.56	1 1/4	31.75
1/4	6.35	3/4	19.05	15/16	23.81	1 1/4	1 1/4	7/32	5.56	7/32	5.56	1 1/4	31.75
9/32	7.14	3/4	19.05	15/16	23.81	1 1/4	1 1/4	7/32	5.56	7/32	5.56	1 1/4	31.75
5/16	7.94	3/4	19.05	15/16	23.81	1 1/4	1 1/4	7/32	5.56	7/32	5.56	1 1/4	31.75
11/32	8.73	3/4	19.05	15/16	23.81	1 1/4	1 1/4	7/32	5.56	7/32	5.56	1 1/4	31.75
3/8	9.52	3/4	19.05	15/16	23.81	1 1/4	1 1/4	7/32	5.56	7/32	5.56	1 1/4	31.75
13/32	10.32	3/4	19.05	15/16	23.81	1 1/4	1 1/4	7/32	5.56	7/32	5.56	1 1/4	31.75
7/16	11.11	3/4	19.05	15/16	23.81	1 1/4	1 1/4	7/32	5.56	7/32	5.56	1 1/4	31.75
15/32	11.91	3/4	19.05	15/16	23.81	1 1/4	1 1/4	7/32	5.56	7/32	5.56	1 1/4	31.75
1/2	12.70	3/4	19.05	15/16	23.81	1 1/4	1 1/4	7/32	5.56	7/32	5.56	1 1/4	31.75
17/32	13.49	3/4	19.05	15/16	23.81	1 1/4	1 1/4	7/32	5.56	7/32	5.56	1 1/4	31.75
9/16	14.29	3/4	19.05	15/16	23.81	1 1/4	1 1/4	7/32	5.56	7/32	5.56	1 1/4	31.75
19/32	15.08	3/4	19.05	15/16	23.81	1 1/4	1 1/4	7/32	5.56	7/32	5.56	1 1/4	31.75
5/8	15.87	3/4	19.05	15/16	23.81	1 1/4	1 1/4	7/32	5.56	7/32	5.56	1 1/4	31.75
21/32	16.67	3/4	19.05	15/16	23.81	1 1/4	1 1/4	7/32	5.56	7/32	5.56	1 1/4	31.75
11/16	17.46	3/4	19.05	15/16	23.81	1 1/4	1 1/4	7/32	5.56	7/32	5.56	1 1/4	31.75
23/32	18.26	3/4	19.05	15/16	23.81	1 1/4	1 1/4	7/32	5.56	7/32	5.56	1 1/4	31.75
3/4	19.05	3/4	19.05	15/16	23.81	1 1/4	1 1/4	7/32	5.56	7/32	5.56	1 1/4	31.75
3/16	4.76	3/4	19.05	31/32	24.61	1 1/4	1 1/4	7/32	5.56	7/32	5.56	1 1/4	31.75
7/32	5.56	3/4	19.05	31/32	24.61	1 1/4	1 1/4	7/32	5.56	7/32	5.56	1 1/4	31.75
1/4	6.35	3/4	19.05	31/32	24.61	1 1/4	1 1/4	7/32	5.56	7/32	5.56	1 1/4	31.75
9/32	7.14	3/4	19.05	31/32	24.61	1 1/4	1 1/4	7/32	5.56	7/32	5.56	1 1/4	31.75
5/16	7.94	3/4	19.05	31/32	24.61	1 1/4	1 1/4	7/32	5.56	7/32	5.56	1 1/4	31.75
11/32	8.73	3/4	19.05	31/32	24.61	1 1/4	1 1/4	7/32	5.56	7/32	5.56	1 1/4	31.75
3/8	9.52	3/4	19.05	31/32	24.61	1 1/4	1 1/4	7/32	5.56	7/32	5.56	1 1/4	31.75
13/32	10.32	3/4	19.05	31/32	24.61	1 1/4	1 1/4	7/32	5.56	7/32	5.56	1 1/4	31.75
7/16	11.11	3/4	19.05	31/32	24.61	1 1/4	1 1/4	7/32	5.56	7/32	5.56	1 1/4	31.75
15/32	11.91	3/4	19.05	31/32	24.61	1 1/4	1 1/4	7/32	5.56	7/32	5.56	1 1/4	31.75
1/2	12.70	3/4	19.05	31/32	24.61	1 1/4	1 1/4	7/32	5.56	7/32	5.56	1 1/4	31.75
17/32	13.49	3/4	19.05	31/32	24.61	1 1/4	1 1/4	7/32	5.56	7/32	5.56	1 1/4	31.75
9/16	14.29	3/4	19.05	31/32	24.61	1 1/4	1 1/4	7/32	5.56	7/32	5.56	1 1/4	31.75
19/32	15.08	3/4	19.05	31/32	24.61	1 1/4	1 1/4	7/32	5.56	7/32	5.56	1 1/4	31.75
5/8	15.87	3/4	19.05	31/32	24.61	1 1/4	1 1/4	7/32	5.56	7/32	5.56	1 1/4	31.75

www.globaltungsten.com

B		E		D		M	A	L		T		C	
inch	mm	inch	mm	inch	mm	inch	inch	inch	mm	inch	mm	inch	mm
21/32	16.67	3/4	19.05	31/32	24.61	1 1/4	1 1/4	7/32	5.56	7/32	5.56	1 1/4	31.75
11/16	17.46	3/4	19.05	31/32	24.61	1 1/4	1 1/4	7/32	5.56	7/32	5.56	1 1/4	31.75
23/32	18.26	3/4	19.05	31/32	24.61	1 1/4	1 1/4	7/32	5.56	7/32	5.56	1 1/4	31.75
3/4	19.05	3/4	19.05	31/32	24.61	1 1/4	1 1/4	7/32	5.56	7/32	5.56	1 1/4	31.75
3/16	4.76	3/4	19.05	1	25.40	1 1/4	1 1/4	7/32	5.56	7/32	5.56	1 1/4	31.75
7/32	5.56	3/4	19.05	1	25.40	1 1/4	1 1/4	7/32	5.56	7/32	5.56	1 1/4	31.75
1/4	6.35	3/4	19.05	1	25.40	1 1/4	1 1/4	7/32	5.56	7/32	5.56	1 1/4	31.75
9/32	7.14	3/4	19.05	1	25.40	1 1/4	1 1/4	7/32	5.56	7/32	5.56	1 1/4	31.75
5/16	7.94	3/4	19.05	1	25.40	1 1/4	1 1/4	7/32	5.56	7/32	5.56	1 1/4	31.75
11/32	8.73	3/4	19.05	1	25.40	1 1/4	1 1/4	7/32	5.56	7/32	5.56	1 1/4	31.75
3/8	9.52	3/4	19.05	1	25.40	1 1/4	1 1/4	7/32	5.56	7/32	5.56	1 1/4	31.75
13/32	10.32	3/4	19.05	1	25.40	1 1/4	1 1/4	7/32	5.56	7/32	5.56	1 1/4	31.75
7/16	11.11	3/4	19.05	1	25.40	1 1/4	1 1/4	7/32	5.56	7/32	5.56	1 1/4	31.75
15/32	11.91	3/4	19.05	1	25.40	1 1/4	1 1/4	7/32	5.56	7/32	5.56	1 1/4	31.75
1/2	12.70	3/4	19.05	1	25.40	1 1/4	1 1/4	7/32	5.56	7/32	5.56	1 1/4	31.75
17/32	13.49	3/4	19.05	1	25.40	1 1/4	1 1/4	7/32	5.56	7/32	5.56	1 1/4	31.75
9/16	14.29	3/4	19.05	1	25.40	1 1/4	1 1/4	7/32	5.56	7/32	5.56	1 1/4	31.75
19/32	15.08	3/4	19.05	1	25.40	1 1/4	1 1/4	7/32	5.56	7/32	5.56	1 1/4	31.75
5/8	15.87	3/4	19.05	1	25.40	1 1/4	1 1/4	7/32	5.56	7/32	5.56	1 1/4	31.75
21/32	16.67	3/4	19.05	1	25.40	1 1/4	1 1/4	7/32	5.56	7/32	5.56	1 1/4	31.75
11/16	17.46	3/4	19.05	1	25.40	1 1/4	1 1/4	7/32	5.56	7/32	5.56	1 1/4	31.75
23/32	18.26	3/4	19.05	1	25.40	1 1/4	1 1/4	7/32	5.56	7/32	5.56	1 1/4	31.75
3/4	19.05	3/4	19.05	1	25.40	1 1/4	1 1/4	7/32	5.56	7/32	5.56	1 1/4	31.75
3/16	4.76	5/8	15.87	25/32	19.84	1 1/4	1 1/4	7/32	5.56	7/32	5.56	1 1/4	31.75
3/16	4.76	5/8	15.87	13/16	20.64	1 1/4	1 1/4	7/32	5.56	7/32	5.56	1 1/4	31.75
3/16	4.76	5/8	15.87	27/32	21.43	1 1/4	1 1/4	7/32	5.56	7/32	5.56	1 1/4	31.75
3/16	4.76	5/8	15.87	7/8	22.22	1 1/4	1 1/4	7/32	5.56	7/32	5.56	1 1/4	31.75
3/16	4.76	5/8	15.87	29/32	23.02	1 1/4	1 1/4	7/32	5.56	7/32	5.56	1 1/4	31.75
3/16	4.76	5/8	15.87	15/16	23.81	1 1/4	1 1/4	7/32	5.56	7/32	5.56	1 1/4	31.75
3/16	4.76	5/8	15.87	31/32	24.61	1 1/4	1 1/4	7/32	5.56	7/32	5.56	1 1/4	31.75
3/16	4.76	5/8	15.87	1	25.40	1 1/4	1 1/4	7/32	5.56	7/32	5.56	1 1/4	31.75
7/32	5.56	5/8	15.87	25/32	19.84	1 1/4	1 1/4	7/32	5.56	7/32	5.56	1 1/4	31.75
7/32	5.56	5/8	15.87	13/16	20.64	1 1/4	1 1/4	7/32	5.56	7/32	5.56	1 1/4	31.75
7/32	5.56	5/8	15.87	27/32	21.43	1 1/4	1 1/4	7/32	5.56	7/32	5.56	1 1/4	31.75
7/32	5.56	5/8	15.87	7/8	22.22	1 1/4	1 1/4	7/32	5.56	7/32	5.56	1 1/4	31.75
7/32	5.56	5/8	15.87	29/32	23.02	1 1/4	1 1/4	7/32	5.56	7/32	5.56	1 1/4	31.75
7/32	5.56	5/8	15.87	15/16	23.81	1 1/4	1 1/4	7/32	5.56	7/32	5.56	1 1/4	31.75
7/32	5.56	5/8	15.87	31/32	24.61	1 1/4	1 1/4	7/32	5.56	7/32	5.56	1 1/4	31.75
7/32	5.56	5/8	15.87	1	25.40	1 1/4	1 1/4	7/32	5.56	7/32	5.56	1 1/4	31.75
1/4	6.35	5/8	15.87	25/32	19.84	1 1/4	1 1/4	7/32	5.56	7/32	5.56	1 1/4	31.75
1/4	6.35	5/8	15.87	13/16	20.64	1 1/4	1 1/4	7/32	5.56	7/32	5.56	1 1/4	31.75
1/4	6.35	5/8	15.87	27/32	21.43	1 1/4	1 1/4	7/32	5.56	7/32	5.56	1 1/4	31.75
1/4	6.35	5/8	15.87	7/8	22.22	1 1/4	1 1/4	7/32	5.56	7/32	5.56	1 1/4	31.75
1/4	6.35	5/8	15.87	29/32	23.02	1 1/4	1 1/4	7/32	5.56	7/32	5.56	1 1/4	31.75
1/4	6.35	5/8	15.87	15/16	23.81	1 1/4	1 1/4	7/32	5.56	7/32	5.56	1 1/4	31.75

www.globaltungsten.com

B		E		D		M	A	L		T		C	
inch	mm	inch	mm	inch	mm	inch	inch	inch	mm	inch	mm	inch	mm
1/4	6.35	5/8	15.87	31/32	24.61	1 1/4	1 1/4	7/32	5.56	7/32	5.56	1 1/4	31.75
1/4	6.35	5/8	15.87	1	25.40	1 1/4	1 1/4	7/32	5.56	7/32	5.56	1 1/4	31.75
9/32	7.14	5/8	15.87	25/32	19.84	1 1/4	1 1/4	7/32	5.56	7/32	5.56	1 1/4	31.75
9/32	7.14	5/8	15.87	13/16	20.64	1 1/4	1 1/4	7/32	5.56	7/32	5.56	1 1/4	31.75
9/32	7.14	5/8	15.87	27/32	21.43	1 1/4	1 1/4	7/32	5.56	7/32	5.56	1 1/4	31.75
9/32	7.14	5/8	15.87	7/8	22.22	1 1/4	1 1/4	7/32	5.56	7/32	5.56	1 1/4	31.75
9/32	7.14	5/8	15.87	29/32	23.02	1 1/4	1 1/4	7/32	5.56	7/32	5.56	1 1/4	31.75
9/32	7.14	5/8	15.87	15/16	23.81	1 1/4	1 1/4	7/32	5.56	7/32	5.56	1 1/4	31.75
9/32	7.14	5/8	15.87	31/32	24.61	1 1/4	1 1/4	7/32	5.56	7/32	5.56	1 1/4	31.75
9/32	7.14	5/8	15.87	1	25.40	1 1/4	1 1/4	7/32	5.56	7/32	5.56	1 1/4	31.75
5/16	7.94	5/8	15.87	25/32	19.84	1 1/4	1 1/4	7/32	5.56	7/32	5.56	1 1/4	31.75
5/16	7.94	5/8	15.87	13/16	20.64	1 1/4	1 1/4	7/32	5.56	7/32	5.56	1 1/4	31.75
5/16	7.94	5/8	15.87	27/32	21.43	1 1/4	1 1/4	7/32	5.56	7/32	5.56	1 1/4	31.75
5/16	7.94	5/8	15.87	7/8	22.22	1 1/4	1 1/4	7/32	5.56	7/32	5.56	1 1/4	31.75
5/16	7.94	5/8	15.87	29/32	23.02	1 1/4	1 1/4	7/32	5.56	7/32	5.56	1 1/4	31.75
5/16	7.94	5/8	15.87	15/16	23.81	1 1/4	1 1/4	7/32	5.56	7/32	5.56	1 1/4	31.75
5/16	7.94	5/8	15.87	31/32	24.61	1 1/4	1 1/4	7/32	5.56	7/32	5.56	1 1/4	31.75
5/16	7.94	5/8	15.87	1	25.40	1 1/4	1 1/4	7/32	5.56	7/32	5.56	1 1/4	31.75
11/32	8.73	5/8	15.87	25/32	19.84	1 1/4	1 1/4	7/32	5.56	7/32	5.56	1 1/4	31.75
11/32	8.73	5/8	15.87	13/16	20.64	1 1/4	1 1/4	7/32	5.56	7/32	5.56	1 1/4	31.75
11/32	8.73	5/8	15.87	27/32	21.43	1 1/4	1 1/4	7/32	5.56	7/32	5.56	1 1/4	31.75
11/32	8.73	5/8	15.87	7/8	22.22	1 1/4	1 1/4	7/32	5.56	7/32	5.56	1 1/4	31.75
11/32	8.73	5/8	15.87	29/32	23.02	1 1/4	1 1/4	7/32	5.56	7/32	5.56	1 1/4	31.75
11/32	8.73	5/8	15.87	15/16	23.81	1 1/4	1 1/4	7/32	5.56	7/32	5.56	1 1/4	31.75
11/32	8.73	5/8	15.87	31/32	24.61	1 1/4	1 1/4	7/32	5.56	7/32	5.56	1 1/4	31.75
11/32	8.73	5/8	15.87	1	25.40	1 1/4	1 1/4	7/32	5.56	7/32	5.56	1 1/4	31.75
3/8	9.52	5/8	15.87	25/32	19.84	1 1/4	1 1/4	7/32	5.56	7/32	5.56	1 1/4	31.75
3/8	9.52	5/8	15.87	13/16	20.64	1 1/4	1 1/4	7/32	5.56	7/32	5.56	1 1/4	31.75
3/8	9.52	5/8	15.87	27/32	21.43	1 1/4	1 1/4	7/32	5.56	7/32	5.56	1 1/4	31.75
3/8	9.52	5/8	15.87	7/8	22.22	1 1/4	1 1/4	7/32	5.56	7/32	5.56	1 1/4	31.75
3/8	9.52	5/8	15.87	29/32	23.02	1 1/4	1 1/4	7/32	5.56	7/32	5.56	1 1/4	31.75
3/8	9.52	5/8	15.87	15/16	23.81	1 1/4	1 1/4	7/32	5.56	7/32	5.56	1 1/4	31.75
3/8	9.52	5/8	15.87	31/32	24.61	1 1/4	1 1/4	7/32	5.56	7/32	5.56	1 1/4	31.75
3/8	9.52	5/8	15.87	1	25.40	1 1/4	1 1/4	7/32	5.56	7/32	5.56	1 1/4	31.75
13/32	10.32	5/8	15.87	25/32	19.84	1 1/4	1 1/4	7/32	5.56	7/32	5.56	1 1/4	31.75
13/32	10.32	5/8	15.87	13/16	20.64	1 1/4	1 1/4	7/32	5.56	7/32	5.56	1 1/4	31.75
13/32	10.32	5/8	15.87	27/32	21.43	1 1/4	1 1/4	7/32	5.56	7/32	5.56	1 1/4	31.75
13/32	10.32	5/8	15.87	7/8	22.22	1 1/4	1 1/4	7/32	5.56	7/32	5.56	1 1/4	31.75
13/32	10.32	5/8	15.87	29/32	23.02	1 1/4	1 1/4	7/32	5.56	7/32	5.56	1 1/4	31.75
13/32	10.32	5/8	15.87	15/16	23.81	1 1/4	1 1/4	7/32	5.56	7/32	5.56	1 1/4	31.75
13/32	10.32	5/8	15.87	31/32	24.61	1 1/4	1 1/4	7/32	5.56	7/32	5.56	1 1/4	31.75
13/32	10.32	5/8	15.87	1	25.40	1 1/4	1 1/4	7/32	5.56	7/32	5.56	1 1/4	31.75
7/16	11.11	5/8	15.87	25/32	19.84	1 1/4	1 1/4	7/32	5.56	7/32	5.56	1 1/4	31.75
7/16	11.11	5/8	15.87	13/16	20.64	1 1/4	1 1/4	7/32	5.56	7/32	5.56	1 1/4	31.75
7/16	11.11	5/8	15.87	27/32	21.43	1 1/4	1 1/4	7/32	5.56	7/32	5.56	1 1/4	31.75

www.globaltungsten.com

B		E		D		M	A	L		T		C	
inch	mm	inch	mm	inch	mm	inch	inch	inch	mm	inch	mm	inch	mm
7/16	11.11	5/8	15.87	7/8	22.22	1 1/4	1 1/4	7/32	5.56	7/32	5.56	1 1/4	31.75
7/16	11.11	5/8	15.87	29/32	23.02	1 1/4	1 1/4	7/32	5.56	7/32	5.56	1 1/4	31.75
7/16	11.11	5/8	15.87	15/16	23.81	1 1/4	1 1/4	7/32	5.56	7/32	5.56	1 1/4	31.75
7/16	11.11	5/8	15.87	31/32	24.61	1 1/4	1 1/4	7/32	5.56	7/32	5.56	1 1/4	31.75
7/16	11.11	5/8	15.87	1	25.40	1 1/4	1 1/4	7/32	5.56	7/32	5.56	1 1/4	31.75
15/32	11.91	5/8	15.87	25/32	19.84	1 1/4	1 1/4	7/32	5.56	7/32	5.56	1 1/4	31.75
15/32	11.91	5/8	15.87	13/16	20.64	1 1/4	1 1/4	7/32	5.56	7/32	5.56	1 1/4	31.75
15/32	11.91	5/8	15.87	27/32	21.43	1 1/4	1 1/4	7/32	5.56	7/32	5.56	1 1/4	31.75
15/32	11.91	5/8	15.87	7/8	22.22	1 1/4	1 1/4	7/32	5.56	7/32	5.56	1 1/4	31.75
15/32	11.91	5/8	15.87	29/32	23.02	1 1/4	1 1/4	7/32	5.56	7/32	5.56	1 1/4	31.75
15/32	11.91	5/8	15.87	15/16	23.81	1 1/4	1 1/4	7/32	5.56	7/32	5.56	1 1/4	31.75
15/32	11.91	5/8	15.87	31/32	24.61	1 1/4	1 1/4	7/32	5.56	7/32	5.56	1 1/4	31.75
15/32	11.91	5/8	15.87	1	25.40	1 1/4	1 1/4	7/32	5.56	7/32	5.56	1 1/4	31.75
1/2	12.70	5/8	15.87	25/32	19.84	1 1/4	1 1/4	7/32	5.56	7/32	5.56	1 1/4	31.75
1/2	12.70	5/8	15.87	13/16	20.64	1 1/4	1 1/4	7/32	5.56	7/32	5.56	1 1/4	31.75
1/2	12.70	5/8	15.87	27/32	21.43	1 1/4	1 1/4	7/32	5.56	7/32	5.56	1 1/4	31.75
1/2	12.70	5/8	15.87	7/8	22.22	1 1/4	1 1/4	7/32	5.56	7/32	5.56	1 1/4	31.75
1/2	12.70	5/8	15.87	29/32	23.02	1 1/4	1 1/4	7/32	5.56	7/32	5.56	1 1/4	31.75
1/2	12.70	5/8	15.87	15/16	23.81	1 1/4	1 1/4	7/32	5.56	7/32	5.56	1 1/4	31.75
1/2	12.70	5/8	15.87	31/32	24.61	1 1/4	1 1/4	7/32	5.56	7/32	5.56	1 1/4	31.75
1/2	12.70	5/8	15.87	1	25.40	1 1/4	1 1/4	7/32	5.56	7/32	5.56	1 1/4	31.75
17/32	13.49	5/8	15.87	25/32	19.84	1 1/4	1 1/4	7/32	5.56	7/32	5.56	1 1/4	31.75
17/32	13.49	5/8	15.87	13/16	20.64	1 1/4	1 1/4	7/32	5.56	7/32	5.56	1 1/4	31.75
17/32	13.49	5/8	15.87	27/32	21.43	1 1/4	1 1/4	7/32	5.56	7/32	5.56	1 1/4	31.75
17/32	13.49	5/8	15.87	7/8	22.22	1 1/4	1 1/4	7/32	5.56	7/32	5.56	1 1/4	31.75
17/32	13.49	5/8	15.87	29/32	23.02	1 1/4	1 1/4	7/32	5.56	7/32	5.56	1 1/4	31.75
17/32	13.49	5/8	15.87	15/16	23.81	1 1/4	1 1/4	7/32	5.56	7/32	5.56	1 1/4	31.75
17/32	13.49	5/8	15.87	31/32	24.61	1 1/4	1 1/4	7/32	5.56	7/32	5.56	1 1/4	31.75
17/32	13.49	5/8	15.87	1	25.40	1 1/4	1 1/4	7/32	5.56	7/32	5.56	1 1/4	31.75
9/16	14.29	5/8	15.87	25/32	19.84	1 1/4	1 1/4	7/32	5.56	7/32	5.56	1 1/4	31.75
9/16	14.29	5/8	15.87	13/16	20.64	1 1/4	1 1/4	7/32	5.56	7/32	5.56	1 1/4	31.75
9/16	14.29	5/8	15.87	27/32	21.43	1 1/4	1 1/4	7/32	5.56	7/32	5.56	1 1/4	31.75
9/16	14.29	5/8	15.87	7/8	22.22	1 1/4	1 1/4	7/32	5.56	7/32	5.56	1 1/4	31.75
9/16	14.29	5/8	15.87	29/32	23.02	1 1/4	1 1/4	7/32	5.56	7/32	5.56	1 1/4	31.75
9/16	14.29	5/8	15.87	15/16	23.81	1 1/4	1 1/4	7/32	5.56	7/32	5.56	1 1/4	31.75
9/16	14.29	5/8	15.87	31/32	24.61	1 1/4	1 1/4	7/32	5.56	7/32	5.56	1 1/4	31.75
9/16	14.29	5/8	15.87	1	25.40	1 1/4	1 1/4	7/32	5.56	7/32	5.56	1 1/4	31.75
19/32	15.08	5/8	15.87	25/32	19.84	1 1/4	1 1/4	7/32	5.56	7/32	5.56	1 1/4	31.75
19/32	15.08	5/8	15.87	13/16	20.64	1 1/4	1 1/4	7/32	5.56	7/32	5.56	1 1/4	31.75
19/32	15.08	5/8	15.87	27/32	21.43	1 1/4	1 1/4	7/32	5.56	7/32	5.56	1 1/4	31.75
19/32	15.08	5/8	15.87	7/8	22.22	1 1/4	1 1/4	7/32	5.56	7/32	5.56	1 1/4	31.75
19/32	15.08	5/8	15.87	29/32	23.02	1 1/4	1 1/4	7/32	5.56	7/32	5.56	1 1/4	31.75
19/32	15.08	5/8	15.87	15/16	23.81	1 1/4	1 1/4	7/32	5.56	7/32	5.56	1 1/4	31.75
19/32	15.08	5/8	15.87	31/32	24.61	1 1/4	1 1/4	7/32	5.56	7/32	5.56	1 1/4	31.75
19/32	15.08	5/8	15.87	1	25.40	1 1/4	1 1/4	7/32	5.56	7/32	5.56	1 1/4	31.75

www.globaltungsten.com

B		E		D		M	A	L		T		C	
inch	mm	inch	mm	inch	mm	inch	inch	inch	mm	inch	mm	inch	mm
5/8	15.87	5/8	15.87	25/32	19.84	1 1/4	1 1/4	7/32	5.56	7/32	5.56	1 1/4	31.75
5/8	15.87	5/8	15.87	13/16	20.64	1 1/4	1 1/4	7/32	5.56	7/32	5.56	1 1/4	31.75
5/8	15.87	5/8	15.87	27/32	21.43	1 1/4	1 1/4	7/32	5.56	7/32	5.56	1 1/4	31.75
5/8	15.87	5/8	15.87	7/8	22.22	1 1/4	1 1/4	7/32	5.56	7/32	5.56	1 1/4	31.75
5/8	15.87	5/8	15.87	29/32	23.02	1 1/4	1 1/4	7/32	5.56	7/32	5.56	1 1/4	31.75
5/8	15.87	5/8	15.87	15/16	23.81	1 1/4	1 1/4	7/32	5.56	7/32	5.56	1 1/4	31.75
5/8	15.87	5/8	15.87	31/32	24.61	1 1/4	1 1/4	7/32	5.56	7/32	5.56	1 1/4	31.75
5/8	15.87	5/8	15.87	1	25.40	1 1/4	1 1/4	7/32	5.56	7/32	5.56	1 1/4	31.75
3/16	4.76	1/2	12.70	21/32	16.67	1 1/4	1 1/4	7/32	5.56	7/32	5.56	1 1/4	31.75
3/16	4.76	1/2	12.70	11/16	17.46	1 1/4	1 1/4	7/32	5.56	7/32	5.56	1 1/4	31.75
3/16	4.76	1/2	12.70	23/32	18.26	1 1/4	1 1/4	7/32	5.56	7/32	5.56	1 1/4	31.75
3/16	4.76	1/2	12.70	3/4	19.05	1 1/4	1 1/4	7/32	5.56	7/32	5.56	1 1/4	31.75
3/16	4.76	1/2	12.70	25/32	19.84	1 1/4	1 1/4	7/32	5.56	7/32	5.56	1 1/4	31.75
3/16	4.76	1/2	12.70	13/16	20.64	1 1/4	1 1/4	7/32	5.56	7/32	5.56	1 1/4	31.75
3/16	4.76	1/2	12.70	27/32	21.43	1 1/4	1 1/4	7/32	5.56	7/32	5.56	1 1/4	31.75
3/16	4.76	1/2	12.70	7/8	22.22	1 1/4	1 1/4	7/32	5.56	7/32	5.56	1 1/4	31.75
3/16	4.76	1/2	12.70	29/32	23.02	1 1/4	1 1/4	7/32	5.56	7/32	5.56	1 1/4	31.75
3/16	4.76	1/2	12.70	15/16	23.81	1 1/4	1 1/4	7/32	5.56	7/32	5.56	1 1/4	31.75
3/16	4.76	1/2	12.70	31/32	24.61	1 1/4	1 1/4	7/32	5.56	7/32	5.56	1 1/4	31.75
3/16	4.76	1/2	12.70	1	25.40	1 1/4	1 1/4	7/32	5.56	7/32	5.56	1 1/4	31.75
7/32	5.56	1/2	12.70	21/32	16.67	1 1/4	1 1/4	7/32	5.56	7/32	5.56	1 1/4	31.75
7/32	5.56	1/2	12.70	11/16	17.46	1 1/4	1 1/4	7/32	5.56	7/32	5.56	1 1/4	31.75
7/32	5.56	1/2	12.70	23/32	18.26	1 1/4	1 1/4	7/32	5.56	7/32	5.56	1 1/4	31.75
7/32	5.56	1/2	12.70	3/4	19.05	1 1/4	1 1/4	7/32	5.56	7/32	5.56	1 1/4	31.75
7/32	5.56	1/2	12.70	25/32	19.84	1 1/4	1 1/4	7/32	5.56	7/32	5.56	1 1/4	31.75
7/32	5.56	1/2	12.70	13/16	20.64	1 1/4	1 1/4	7/32	5.56	7/32	5.56	1 1/4	31.75
7/32	5.56	1/2	12.70	27/32	21.43	1 1/4	1 1/4	7/32	5.56	7/32	5.56	1 1/4	31.75
7/32	5.56	1/2	12.70	7/8	22.22	1 1/4	1 1/4	7/32	5.56	7/32	5.56	1 1/4	31.75
7/32	5.56	1/2	12.70	29/32	23.02	1 1/4	1 1/4	7/32	5.56	7/32	5.56	1 1/4	31.75
7/32	5.56	1/2	12.70	15/16	23.81	1 1/4	1 1/4	7/32	5.56	7/32	5.56	1 1/4	31.75
7/32	5.56	1/2	12.70	31/32	24.61	1 1/4	1 1/4	7/32	5.56	7/32	5.56	1 1/4	31.75
7/32	5.56	1/2	12.70	1	25.40	1 1/4	1 1/4	7/32	5.56	7/32	5.56	1 1/4	31.75
1/4	6.35	1/2	12.70	21/32	16.67	1 1/4	1 1/4	7/32	5.56	7/32	5.56	1 1/4	31.75
1/4	6.35	1/2	12.70	11/16	17.46	1 1/4	1 1/4	7/32	5.56	7/32	5.56	1 1/4	31.75
1/4	6.35	1/2	12.70	23/32	18.26	1 1/4	1 1/4	7/32	5.56	7/32	5.56	1 1/4	31.75
1/4	6.35	1/2	12.70	3/4	19.05	1 1/4	1 1/4	7/32	5.56	7/32	5.56	1 1/4	31.75
1/4	6.35	1/2	12.70	25/32	19.84	1 1/4	1 1/4	7/32	5.56	7/32	5.56	1 1/4	31.75
1/4	6.35	1/2	12.70	13/16	20.64	1 1/4	1 1/4	7/32	5.56	7/32	5.56	1 1/4	31.75
1/4	6.35	1/2	12.70	27/32	21.43	1 1/4	1 1/4	7/32	5.56	7/32	5.56	1 1/4	31.75
1/4	6.35	1/2	12.70	7/8	22.22	1 1/4	1 1/4	7/32	5.56	7/32	5.56	1 1/4	31.75
1/4	6.35	1/2	12.70	29/32	23.02	1 1/4	1 1/4	7/32	5.56	7/32	5.56	1 1/4	31.75
1/4	6.35	1/2	12.70	15/16	23.81	1 1/4	1 1/4	7/32	5.56	7/32	5.56	1 1/4	31.75
1/4	6.35	1/2	12.70	31/32	24.61	1 1/4	1 1/4	7/32	5.56	7/32	5.56	1 1/4	31.75
1/4	6.35	1/2	12.70	1	25.40	1 1/4	1 1/4	7/32	5.56	7/32	5.56	1 1/4	31.75
9/32	7.14	1/2	12.70	21/32	16.67	1 1/4	1 1/4	7/32	5.56	7/32	5.56	1 1/4	31.75

www.globaltungsten.com

B		E		D		M	A	L		T		C	
inch	mm	inch	mm	inch	mm	inch	inch	inch	mm	inch	mm	inch	mm
9/32	7.14	1/2	12.70	11/16	17.46	1 1/4	1 1/4	7/32	5.56	7/32	5.56	1 1/4	31.75
9/32	7.14	1/2	12.70	23/32	18.26	1 1/4	1 1/4	7/32	5.56	7/32	5.56	1 1/4	31.75
9/32	7.14	1/2	12.70	3/4	19.05	1 1/4	1 1/4	7/32	5.56	7/32	5.56	1 1/4	31.75
9/32	7.14	1/2	12.70	25/32	19.84	1 1/4	1 1/4	7/32	5.56	7/32	5.56	1 1/4	31.75
9/32	7.14	1/2	12.70	13/16	20.64	1 1/4	1 1/4	7/32	5.56	7/32	5.56	1 1/4	31.75
9/32	7.14	1/2	12.70	27/32	21.43	1 1/4	1 1/4	7/32	5.56	7/32	5.56	1 1/4	31.75
9/32	7.14	1/2	12.70	7/8	22.22	1 1/4	1 1/4	7/32	5.56	7/32	5.56	1 1/4	31.75
9/32	7.14	1/2	12.70	29/32	23.02	1 1/4	1 1/4	7/32	5.56	7/32	5.56	1 1/4	31.75
9/32	7.14	1/2	12.70	15/16	23.81	1 1/4	1 1/4	7/32	5.56	7/32	5.56	1 1/4	31.75
9/32	7.14	1/2	12.70	31/32	24.61	1 1/4	1 1/4	7/32	5.56	7/32	5.56	1 1/4	31.75
9/32	7.14	1/2	12.70	1	25.40	1 1/4	1 1/4	7/32	5.56	7/32	5.56	1 1/4	31.75
5/16	7.94	1/2	12.70	21/32	16.67	1 1/4	1 1/4	7/32	5.56	7/32	5.56	1 1/4	31.75
5/16	7.94	1/2	12.70	11/16	17.46	1 1/4	1 1/4	7/32	5.56	7/32	5.56	1 1/4	31.75
5/16	7.94	1/2	12.70	23/32	18.26	1 1/4	1 1/4	7/32	5.56	7/32	5.56	1 1/4	31.75
5/16	7.94	1/2	12.70	3/4	19.05	1 1/4	1 1/4	7/32	5.56	7/32	5.56	1 1/4	31.75
5/16	7.94	1/2	12.70	25/32	19.84	1 1/4	1 1/4	7/32	5.56	7/32	5.56	1 1/4	31.75
5/16	7.94	1/2	12.70	13/16	20.64	1 1/4	1 1/4	7/32	5.56	7/32	5.56	1 1/4	31.75
5/16	7.94	1/2	12.70	27/32	21.43	1 1/4	1 1/4	7/32	5.56	7/32	5.56	1 1/4	31.75
5/16	7.94	1/2	12.70	7/8	22.22	1 1/4	1 1/4	7/32	5.56	7/32	5.56	1 1/4	31.75
5/16	7.94	1/2	12.70	29/32	23.02	1 1/4	1 1/4	7/32	5.56	7/32	5.56	1 1/4	31.75
5/16	7.94	1/2	12.70	15/16	23.81	1 1/4	1 1/4	7/32	5.56	7/32	5.56	1 1/4	31.75
5/16	7.94	1/2	12.70	31/32	24.61	1 1/4	1 1/4	7/32	5.56	7/32	5.56	1 1/4	31.75
5/16	7.94	1/2	12.70	1	25.40	1 1/4	1 1/4	7/32	5.56	7/32	5.56	1 1/4	31.75
11/32	8.73	1/2	12.70	21/32	16.67	1 1/4	1 1/4	7/32	5.56	7/32	5.56	1 1/4	31.75
11/32	8.73	1/2	12.70	11/16	17.46	1 1/4	1 1/4	7/32	5.56	7/32	5.56	1 1/4	31.75
11/32	8.73	1/2	12.70	23/32	18.26	1 1/4	1 1/4	7/32	5.56	7/32	5.56	1 1/4	31.75
11/32	8.73	1/2	12.70	3/4	19.05	1 1/4	1 1/4	7/32	5.56	7/32	5.56	1 1/4	31.75
11/32	8.73	1/2	12.70	25/32	19.84	1 1/4	1 1/4	7/32	5.56	7/32	5.56	1 1/4	31.75
11/32	8.73	1/2	12.70	13/16	20.64	1 1/4	1 1/4	7/32	5.56	7/32	5.56	1 1/4	31.75
11/32	8.73	1/2	12.70	27/32	21.43	1 1/4	1 1/4	7/32	5.56	7/32	5.56	1 1/4	31.75
11/32	8.73	1/2	12.70	7/8	22.22	1 1/4	1 1/4	7/32	5.56	7/32	5.56	1 1/4	31.75
11/32	8.73	1/2	12.70	29/32	23.02	1 1/4	1 1/4	7/32	5.56	7/32	5.56	1 1/4	31.75
11/32	8.73	1/2	12.70	15/16	23.81	1 1/4	1 1/4	7/32	5.56	7/32	5.56	1 1/4	31.75
11/32	8.73	1/2	12.70	31/32	24.61	1 1/4	1 1/4	7/32	5.56	7/32	5.56	1 1/4	31.75
11/32	8.73	1/2	12.70	1	25.40	1 1/4	1 1/4	7/32	5.56	7/32	5.56	1 1/4	31.75
3/8	9.52	1/2	12.70	21/32	16.67	1 1/4	1 1/4	7/32	5.56	7/32	5.56	1 1/4	31.75
3/8	9.52	1/2	12.70	11/16	17.46	1 1/4	1 1/4	7/32	5.56	7/32	5.56	1 1/4	31.75
3/8	9.52	1/2	12.70	23/32	18.26	1 1/4	1 1/4	7/32	5.56	7/32	5.56	1 1/4	31.75
3/8	9.52	1/2	12.70	3/4	19.05	1 1/4	1 1/4	7/32	5.56	7/32	5.56	1 1/4	31.75
3/8	9.52	1/2	12.70	25/32	19.84	1 1/4	1 1/4	7/32	5.56	7/32	5.56	1 1/4	31.75
3/8	9.52	1/2	12.70	13/16	20.64	1 1/4	1 1/4	7/32	5.56	7/32	5.56	1 1/4	31.75
3/8	9.52	1/2	12.70	27/32	21.43	1 1/4	1 1/4	7/32	5.56	7/32	5.56	1 1/4	31.75
3/8	9.52	1/2	12.70	7/8	22.22	1 1/4	1 1/4	7/32	5.56	7/32	5.56	1 1/4	31.75
3/8	9.52	1/2	12.70	29/32	23.02	1 1/4	1 1/4	7/32	5.56	7/32	5.56	1 1/4	31.75
3/8	9.52	1/2	12.70	15/16	23.81	1 1/4	1 1/4	7/32	5.56	7/32	5.56	1 1/4	31.75

www.globaltungsten.com

B		E		D		M	A	L		T		C	
inch	mm	inch	mm	inch	mm	inch	inch	inch	mm	inch	mm	inch	mm
3/8	9.52	1/2	12.70	31/32	24.61	1 1/4	1 1/4	7/32	5.56	7/32	5.56	1 1/4	31.75
3/8	9.52	1/2	12.70	1	25.40	1 1/4	1 1/4	7/32	5.56	7/32	5.56	1 1/4	31.75
13/32	10.32	1/2	12.70	21/32	16.67	1 1/4	1 1/4	7/32	5.56	7/32	5.56	1 1/4	31.75
13/32	10.32	1/2	12.70	11/16	17.46	1 1/4	1 1/4	7/32	5.56	7/32	5.56	1 1/4	31.75
13/32	10.32	1/2	12.70	23/32	18.26	1 1/4	1 1/4	7/32	5.56	7/32	5.56	1 1/4	31.75
13/32	10.32	1/2	12.70	3/4	19.05	1 1/4	1 1/4	7/32	5.56	7/32	5.56	1 1/4	31.75
13/32	10.32	1/2	12.70	25/32	19.84	1 1/4	1 1/4	7/32	5.56	7/32	5.56	1 1/4	31.75
13/32	10.32	1/2	12.70	13/16	20.64	1 1/4	1 1/4	7/32	5.56	7/32	5.56	1 1/4	31.75
13/32	10.32	1/2	12.70	27/32	21.43	1 1/4	1 1/4	7/32	5.56	7/32	5.56	1 1/4	31.75
13/32	10.32	1/2	12.70	7/8	22.22	1 1/4	1 1/4	7/32	5.56	7/32	5.56	1 1/4	31.75
13/32	10.32	1/2	12.70	29/32	23.02	1 1/4	1 1/4	7/32	5.56	7/32	5.56	1 1/4	31.75
13/32	10.32	1/2	12.70	15/16	23.81	1 1/4	1 1/4	7/32	5.56	7/32	5.56	1 1/4	31.75
13/32	10.32	1/2	12.70	31/32	24.61	1 1/4	1 1/4	7/32	5.56	7/32	5.56	1 1/4	31.75
13/32	10.32	1/2	12.70	1	25.40	1 1/4	1 1/4	7/32	5.56	7/32	5.56	1 1/4	31.75
7/16	11.11	1/2	12.70	21/32	16.67	1 1/4	1 1/4	7/32	5.56	7/32	5.56	1 1/4	31.75
7/16	11.11	1/2	12.70	11/16	17.46	1 1/4	1 1/4	7/32	5.56	7/32	5.56	1 1/4	31.75
7/16	11.11	1/2	12.70	23/32	18.26	1 1/4	1 1/4	7/32	5.56	7/32	5.56	1 1/4	31.75
7/16	11.11	1/2	12.70	3/4	19.05	1 1/4	1 1/4	7/32	5.56	7/32	5.56	1 1/4	31.75
7/16	11.11	1/2	12.70	25/32	19.84	1 1/4	1 1/4	7/32	5.56	7/32	5.56	1 1/4	31.75
7/16	11.11	1/2	12.70	13/16	20.64	1 1/4	1 1/4	7/32	5.56	7/32	5.56	1 1/4	31.75
7/16	11.11	1/2	12.70	27/32	21.43	1 1/4	1 1/4	7/32	5.56	7/32	5.56	1 1/4	31.75
7/16	11.11	1/2	12.70	7/8	22.22	1 1/4	1 1/4	7/32	5.56	7/32	5.56	1 1/4	31.75
7/16	11.11	1/2	12.70	29/32	23.02	1 1/4	1 1/4	7/32	5.56	7/32	5.56	1 1/4	31.75
7/16	11.11	1/2	12.70	15/16	23.81	1 1/4	1 1/4	7/32	5.56	7/32	5.56	1 1/4	31.75
7/16	11.11	1/2	12.70	31/32	24.61	1 1/4	1 1/4	7/32	5.56	7/32	5.56	1 1/4	31.75
7/16	11.11	1/2	12.70	1	25.40	1 1/4	1 1/4	7/32	5.56	7/32	5.56	1 1/4	31.75
15/32	11.91	1/2	12.70	21/32	16.67	1 1/4	1 1/4	7/32	5.56	7/32	5.56	1 1/4	31.75
15/32	11.91	1/2	12.70	11/16	17.46	1 1/4	1 1/4	7/32	5.56	7/32	5.56	1 1/4	31.75
15/32	11.91	1/2	12.70	23/32	18.26	1 1/4	1 1/4	7/32	5.56	7/32	5.56	1 1/4	31.75
15/32	11.91	1/2	12.70	3/4	19.05	1 1/4	1 1/4	7/32	5.56	7/32	5.56	1 1/4	31.75
15/32	11.91	1/2	12.70	25/32	19.84	1 1/4	1 1/4	7/32	5.56	7/32	5.56	1 1/4	31.75
15/32	11.91	1/2	12.70	13/16	20.64	1 1/4	1 1/4	7/32	5.56	7/32	5.56	1 1/4	31.75
15/32	11.91	1/2	12.70	27/32	21.43	1 1/4	1 1/4	7/32	5.56	7/32	5.56	1 1/4	31.75
15/32	11.91	1/2	12.70	7/8	22.22	1 1/4	1 1/4	7/32	5.56	7/32	5.56	1 1/4	31.75
15/32	11.91	1/2	12.70	29/32	23.02	1 1/4	1 1/4	7/32	5.56	7/32	5.56	1 1/4	31.75
15/32	11.91	1/2	12.70	15/16	23.81	1 1/4	1 1/4	7/32	5.56	7/32	5.56	1 1/4	31.75
15/32	11.91	1/2	12.70	31/32	24.61	1 1/4	1 1/4	7/32	5.56	7/32	5.56	1 1/4	31.75
15/32	11.91	1/2	12.70	1	25.40	1 1/4	1 1/4	7/32	5.56	7/32	5.56	1 1/4	31.75
1/2	12.70	1/2	12.70	21/32	16.67	1 1/4	1 1/4	7/32	5.56	7/32	5.56	1 1/4	31.75
1/2	12.70	1/2	12.70	11/16	17.46	1 1/4	1 1/4	7/32	5.56	7/32	5.56	1 1/4	31.75
1/2	12.70	1/2	12.70	23/32	18.26	1 1/4	1 1/4	7/32	5.56	7/32	5.56	1 1/4	31.75
1/2	12.70	1/2	12.70	3/4	19.05	1 1/4	1 1/4	7/32	5.56	7/32	5.56	1 1/4	31.75
1/2	12.70	1/2	12.70	25/32	19.84	1 1/4	1 1/4	7/32	5.56	7/32	5.56	1 1/4	31.75
1/2	12.70	1/2	12.70	13/16	20.64	1 1/4	1 1/4	7/32	5.56	7/32	5.56	1 1/4	31.75
1/2	12.70	1/2	12.70	27/32	21.43	1 1/4	1 1/4	7/32	5.56	7/32	5.56	1 1/4	31.75

www.globaltungsten.com

B		E		D		M	A	L		T		C	
inch	mm	inch	mm	inch	mm	inch	inch	inch	mm	inch	mm	inch	mm
1/2	12.70	1/2	12.70	7/8	22.22	1 1/4	1 1/4	7/32	5.56	7/32	5.56	1 1/4	31.75
1/2	12.70	1/2	12.70	29/32	23.02	1 1/4	1 1/4	7/32	5.56	7/32	5.56	1 1/4	31.75
1/2	12.70	1/2	12.70	15/16	23.81	1 1/4	1 1/4	7/32	5.56	7/32	5.56	1 1/4	31.75
1/2	12.70	1/2	12.70	31/32	24.61	1 1/4	1 1/4	7/32	5.56	7/32	5.56	1 1/4	31.75
1/2	12.70	1/2	12.70	1	25.40	1 1/4	1 1/4	7/32	5.56	7/32	5.56	1 1/4	31.75
3/16	4.76	3/8	9.52	19/32	15.08	1 1/4	1 1/4	7/32	5.56	7/32	5.56	1 1/4	31.75
3/16	4.76	3/8	9.52	5/8	15.87	1 1/4	1 1/4	7/32	5.56	7/32	5.56	1 1/4	31.75
3/16	4.76	3/8	9.52	21/32	16.67	1 1/4	1 1/4	7/32	5.56	7/32	5.56	1 1/4	31.75
3/16	4.76	3/8	9.52	11/16	17.46	1 1/4	1 1/4	7/32	5.56	7/32	5.56	1 1/4	31.75
3/16	4.76	3/8	9.52	23/32	18.26	1 1/4	1 1/4	7/32	5.56	7/32	5.56	1 1/4	31.75
3/16	4.76	3/8	9.52	3/4	19.05	1 1/4	1 1/4	7/32	5.56	7/32	5.56	1 1/4	31.75
3/16	4.76	3/8	9.52	25/32	19.84	1 1/4	1 1/4	7/32	5.56	7/32	5.56	1 1/4	31.75
3/16	4.76	3/8	9.52	13/16	20.64	1 1/4	1 1/4	7/32	5.56	7/32	5.56	1 1/4	31.75
3/16	4.76	3/8	9.52	27/32	21.43	1 1/4	1 1/4	7/32	5.56	7/32	5.56	1 1/4	31.75
3/16	4.76	3/8	9.52	7/8	22.22	1 1/4	1 1/4	7/32	5.56	7/32	5.56	1 1/4	31.75
3/16	4.76	3/8	9.52	29/32	23.02	1 1/4	1 1/4	7/32	5.56	7/32	5.56	1 1/4	31.75
3/16	4.76	3/8	9.52	15/16	23.81	1 1/4	1 1/4	7/32	5.56	7/32	5.56	1 1/4	31.75
3/16	4.76	3/8	9.52	31/32	24.61	1 1/4	1 1/4	7/32	5.56	7/32	5.56	1 1/4	31.75
3/16	4.76	3/8	9.52	1	25.40	1 1/4	1 1/4	7/32	5.56	7/32	5.56	1 1/4	31.75
7/32	5.56	3/8	9.52	19/32	15.08	1 1/4	1 1/4	7/32	5.56	7/32	5.56	1 1/4	31.75
7/32	5.56	3/8	9.52	5/8	15.87	1 1/4	1 1/4	7/32	5.56	7/32	5.56	1 1/4	31.75
7/32	5.56	3/8	9.52	21/32	16.67	1 1/4	1 1/4	7/32	5.56	7/32	5.56	1 1/4	31.75
7/32	5.56	3/8	9.52	11/16	17.46	1 1/4	1 1/4	7/32	5.56	7/32	5.56	1 1/4	31.75
7/32	5.56	3/8	9.52	23/32	18.26	1 1/4	1 1/4	7/32	5.56	7/32	5.56	1 1/4	31.75
7/32	5.56	3/8	9.52	3/4	19.05	1 1/4	1 1/4	7/32	5.56	7/32	5.56	1 1/4	31.75
7/32	5.56	3/8	9.52	25/32	19.84	1 1/4	1 1/4	7/32	5.56	7/32	5.56	1 1/4	31.75
7/32	5.56	3/8	9.52	13/16	20.64	1 1/4	1 1/4	7/32	5.56	7/32	5.56	1 1/4	31.75
7/32	5.56	3/8	9.52	27/32	21.43	1 1/4	1 1/4	7/32	5.56	7/32	5.56	1 1/4	31.75
7/32	5.56	3/8	9.52	7/8	22.22	1 1/4	1 1/4	7/32	5.56	7/32	5.56	1 1/4	31.75
7/32	5.56	3/8	9.52	29/32	23.02	1 1/4	1 1/4	7/32	5.56	7/32	5.56	1 1/4	31.75
7/32	5.56	3/8	9.52	15/16	23.81	1 1/4	1 1/4	7/32	5.56	7/32	5.56	1 1/4	31.75
7/32	5.56	3/8	9.52	31/32	24.61	1 1/4	1 1/4	7/32	5.56	7/32	5.56	1 1/4	31.75
7/32	5.56	3/8	9.52	1	25.40	1 1/4	1 1/4	7/32	5.56	7/32	5.56	1 1/4	31.75
1/4	6.35	3/8	9.52	19/32	15.08	1 1/4	1 1/4	7/32	5.56	7/32	5.56	1 1/4	31.75
1/4	6.35	3/8	9.52	5/8	15.87	1 1/4	1 1/4	7/32	5.56	7/32	5.56	1 1/4	31.75
1/4	6.35	3/8	9.52	21/32	16.67	1 1/4	1 1/4	7/32	5.56	7/32	5.56	1 1/4	31.75
1/4	6.35	3/8	9.52	11/16	17.46	1 1/4	1 1/4	7/32	5.56	7/32	5.56	1 1/4	31.75
1/4	6.35	3/8	9.52	23/32	18.26	1 1/4	1 1/4	7/32	5.56	7/32	5.56	1 1/4	31.75
1/4	6.35	3/8	9.52	3/4	19.05	1 1/4	1 1/4	7/32	5.56	7/32	5.56	1 1/4	31.75
1/4	6.35	3/8	9.52	25/32	19.84	1 1/4	1 1/4	7/32	5.56	7/32	5.56	1 1/4	31.75
1/4	6.35	3/8	9.52	13/16	20.64	1 1/4	1 1/4	7/32	5.56	7/32	5.56	1 1/4	31.75
1/4	6.35	3/8	9.52	27/32	21.43	1 1/4	1 1/4	7/32	5.56	7/32	5.56	1 1/4	31.75
1/4	6.35	3/8	9.52	7/8	22.22	1 1/4	1 1/4	7/32	5.56	7/32	5.56	1 1/4	31.75
1/4	6.35	3/8	9.52	29/32	23.02	1 1/4	1 1/4	7/32	5.56	7/32	5.56	1 1/4	31.75
1/4	6.35	3/8	9.52	15/16	23.81	1 1/4	1 1/4	7/32	5.56	7/32	5.56	1 1/4	31.75

www.globaltungsters.com

B		E		D		M	A	L		T		C	
inch	mm	inch	mm	inch	mm	inch	inch	inch	mm	inch	mm	inch	mm
1/4	6.35	3/8	9.52	31/32	24.61	1 1/4	1 1/4	7/32	5.56	7/32	5.56	1 1/4	31.75
1/4	6.35	3/8	9.52	1	25.40	1 1/4	1 1/4	7/32	5.56	7/32	5.56	1 1/4	31.75
9/32	7.14	3/8	9.52	19/32	15.08	1 1/4	1 1/4	7/32	5.56	7/32	5.56	1 1/4	31.75
9/32	7.14	3/8	9.52	5/8	15.87	1 1/4	1 1/4	7/32	5.56	7/32	5.56	1 1/4	31.75
9/32	7.14	3/8	9.52	21/32	16.67	1 1/4	1 1/4	7/32	5.56	7/32	5.56	1 1/4	31.75
9/32	7.14	3/8	9.52	11/16	17.46	1 1/4	1 1/4	7/32	5.56	7/32	5.56	1 1/4	31.75
9/32	7.14	3/8	9.52	23/32	18.26	1 1/4	1 1/4	7/32	5.56	7/32	5.56	1 1/4	31.75
9/32	7.14	3/8	9.52	3/4	19.05	1 1/4	1 1/4	7/32	5.56	7/32	5.56	1 1/4	31.75
9/32	7.14	3/8	9.52	25/32	19.84	1 1/4	1 1/4	7/32	5.56	7/32	5.56	1 1/4	31.75
9/32	7.14	3/8	9.52	13/16	20.64	1 1/4	1 1/4	7/32	5.56	7/32	5.56	1 1/4	31.75
9/32	7.14	3/8	9.52	27/32	21.43	1 1/4	1 1/4	7/32	5.56	7/32	5.56	1 1/4	31.75
9/32	7.14	3/8	9.52	7/8	22.22	1 1/4	1 1/4	7/32	5.56	7/32	5.56	1 1/4	31.75
9/32	7.14	3/8	9.52	29/32	23.02	1 1/4	1 1/4	7/32	5.56	7/32	5.56	1 1/4	31.75
9/32	7.14	3/8	9.52	15/16	23.81	1 1/4	1 1/4	7/32	5.56	7/32	5.56	1 1/4	31.75
9/32	7.14	3/8	9.52	31/32	24.61	1 1/4	1 1/4	7/32	5.56	7/32	5.56	1 1/4	31.75
9/32	7.14	3/8	9.52	1	25.40	1 1/4	1 1/4	7/32	5.56	7/32	5.56	1 1/4	31.75
5/16	7.94	3/8	9.52	19/32	15.08	1 1/4	1 1/4	7/32	5.56	7/32	5.56	1 1/4	31.75
5/16	7.94	3/8	9.52	5/8	15.87	1 1/4	1 1/4	7/32	5.56	7/32	5.56	1 1/4	31.75
5/16	7.94	3/8	9.52	21/32	16.67	1 1/4	1 1/4	7/32	5.56	7/32	5.56	1 1/4	31.75
5/16	7.94	3/8	9.52	11/16	17.46	1 1/4	1 1/4	7/32	5.56	7/32	5.56	1 1/4	31.75
5/16	7.94	3/8	9.52	23/32	18.26	1 1/4	1 1/4	7/32	5.56	7/32	5.56	1 1/4	31.75
5/16	7.94	3/8	9.52	3/4	19.05	1 1/4	1 1/4	7/32	5.56	7/32	5.56	1 1/4	31.75
5/16	7.94	3/8	9.52	25/32	19.84	1 1/4	1 1/4	7/32	5.56	7/32	5.56	1 1/4	31.75
5/16	7.94	3/8	9.52	13/16	20.64	1 1/4	1 1/4	7/32	5.56	7/32	5.56	1 1/4	31.75
5/16	7.94	3/8	9.52	27/32	21.43	1 1/4	1 1/4	7/32	5.56	7/32	5.56	1 1/4	31.75
5/16	7.94	3/8	9.52	7/8	22.22	1 1/4	1 1/4	7/32	5.56	7/32	5.56	1 1/4	31.75
5/16	7.94	3/8	9.52	29/32	23.02	1 1/4	1 1/4	7/32	5.56	7/32	5.56	1 1/4	31.75
5/16	7.94	3/8	9.52	15/16	23.81	1 1/4	1 1/4	7/32	5.56	7/32	5.56	1 1/4	31.75
5/16	7.94	3/8	9.52	31/32	24.61	1 1/4	1 1/4	7/32	5.56	7/32	5.56	1 1/4	31.75
5/16	7.94	3/8	9.52	1	25.40	1 1/4	1 1/4	7/32	5.56	7/32	5.56	1 1/4	31.75
11/32	8.73	3/8	9.52	19/32	15.08	1 1/4	1 1/4	7/32	5.56	7/32	5.56	1 1/4	31.75
11/32	8.73	3/8	9.52	5/8	15.87	1 1/4	1 1/4	7/32	5.56	7/32	5.56	1 1/4	31.75
11/32	8.73	3/8	9.52	21/32	16.67	1 1/4	1 1/4	7/32	5.56	7/32	5.56	1 1/4	31.75
11/32	8.73	3/8	9.52	11/16	17.46	1 1/4	1 1/4	7/32	5.56	7/32	5.56	1 1/4	31.75
11/32	8.73	3/8	9.52	23/32	18.26	1 1/4	1 1/4	7/32	5.56	7/32	5.56	1 1/4	31.75
11/32	8.73	3/8	9.52	3/4	19.05	1 1/4	1 1/4	7/32	5.56	7/32	5.56	1 1/4	31.75
11/32	8.73	3/8	9.52	25/32	19.84	1 1/4	1 1/4	7/32	5.56	7/32	5.56	1 1/4	31.75
11/32	8.73	3/8	9.52	13/16	20.64	1 1/4	1 1/4	7/32	5.56	7/32	5.56	1 1/4	31.75
11/32	8.73	3/8	9.52	27/32	21.43	1 1/4	1 1/4	7/32	5.56	7/32	5.56	1 1/4	31.75
11/32	8.73	3/8	9.52	7/8	22.22	1 1/4	1 1/4	7/32	5.56	7/32	5.56	1 1/4	31.75
11/32	8.73	3/8	9.52	29/32	23.02	1 1/4	1 1/4	7/32	5.56	7/32	5.56	1 1/4	31.75
11/32	8.73	3/8	9.52	15/16	23.81	1 1/4	1 1/4	7/32	5.56	7/32	5.56	1 1/4	31.75
11/32	8.73	3/8	9.52	31/32	24.61	1 1/4	1 1/4	7/32	5.56	7/32	5.56	1 1/4	31.75
11/32	8.73	3/8	9.52	1	25.40	1 1/4	1 1/4	7/32	5.56	7/32	5.56	1 1/4	31.75
3/8	9.52	3/8	9.52	19/32	15.08	1 1/4	1 1/4	7/32	5.56	7/32	5.56	1 1/4	31.75

www.globaltungsten.com

B		E		D		M	A	L		T		C	
inch	mm	inch	mm	inch	mm	inch	inch	inch	mm	inch	mm	inch	mm
3/8	9.52	3/8	9.52	5/8	15.87	1 1/4	1 1/4	7/32	5.56	7/32	5.56	1 1/4	31.75
3/8	9.52	3/8	9.52	21/32	16.67	1 1/4	1 1/4	7/32	5.56	7/32	5.56	1 1/4	31.75
3/8	9.52	3/8	9.52	11/16	17.46	1 1/4	1 1/4	7/32	5.56	7/32	5.56	1 1/4	31.75
3/8	9.52	3/8	9.52	23/32	18.26	1 1/4	1 1/4	7/32	5.56	7/32	5.56	1 1/4	31.75
3/8	9.52	3/8	9.52	3/4	19.05	1 1/4	1 1/4	7/32	5.56	7/32	5.56	1 1/4	31.75
3/8	9.52	3/8	9.52	25/32	19.84	1 1/4	1 1/4	7/32	5.56	7/32	5.56	1 1/4	31.75
3/8	9.52	3/8	9.52	13/16	20.64	1 1/4	1 1/4	7/32	5.56	7/32	5.56	1 1/4	31.75
3/8	9.52	3/8	9.52	27/32	21.43	1 1/4	1 1/4	7/32	5.56	7/32	5.56	1 1/4	31.75
3/8	9.52	3/8	9.52	7/8	22.22	1 1/4	1 1/4	7/32	5.56	7/32	5.56	1 1/4	31.75
3/8	9.52	3/8	9.52	29/32	23.02	1 1/4	1 1/4	7/32	5.56	7/32	5.56	1 1/4	31.75
3/8	9.52	3/8	9.52	15/16	23.81	1 1/4	1 1/4	7/32	5.56	7/32	5.56	1 1/4	31.75
3/8	9.52	3/8	9.52	31/32	24.61	1 1/4	1 1/4	7/32	5.56	7/32	5.56	1 1/4	31.75
3/8	9.52	3/8	9.52	1	25.40	1 1/4	1 1/4	7/32	5.56	7/32	5.56	1 1/4	31.75
3/16	4.76	3/4	19.05	29/32	23.02	1 1/8	1 1/8	7/32	5.56	7/32	5.56	1 1/4	31.75
7/32	5.56	3/4	19.05	29/32	23.02	1 1/8	1 1/8	7/32	5.56	7/32	5.56	1 1/4	31.75
1/4	6.35	3/4	19.05	29/32	23.02	1 1/8	1 1/8	7/32	5.56	7/32	5.56	1 1/4	31.75
9/32	7.14	3/4	19.05	29/32	23.02	1 1/8	1 1/8	7/32	5.56	7/32	5.56	1 1/4	31.75
5/16	7.94	3/4	19.05	29/32	23.02	1 1/8	1 1/8	7/32	5.56	7/32	5.56	1 1/4	31.75
11/32	8.73	3/4	19.05	29/32	23.02	1 1/8	1 1/8	7/32	5.56	7/32	5.56	1 1/4	31.75
3/8	9.52	3/4	19.05	29/32	23.02	1 1/8	1 1/8	7/32	5.56	7/32	5.56	1 1/4	31.75
13/32	10.32	3/4	19.05	29/32	23.02	1 1/8	1 1/8	7/32	5.56	7/32	5.56	1 1/4	31.75
7/16	11.11	3/4	19.05	29/32	23.02	1 1/8	1 1/8	7/32	5.56	7/32	5.56	1 1/4	31.75
15/32	11.91	3/4	19.05	29/32	23.02	1 1/8	1 1/8	7/32	5.56	7/32	5.56	1 1/4	31.75
1/2	12.70	3/4	19.05	29/32	23.02	1 1/8	1 1/8	7/32	5.56	7/32	5.56	1 1/4	31.75
17/32	13.49	3/4	19.05	29/32	23.02	1 1/8	1 1/8	7/32	5.56	7/32	5.56	1 1/4	31.75
9/16	14.29	3/4	19.05	29/32	23.02	1 1/8	1 1/8	7/32	5.56	7/32	5.56	1 1/4	31.75
19/32	15.08	3/4	19.05	29/32	23.02	1 1/8	1 1/8	7/32	5.56	7/32	5.56	1 1/4	31.75
5/8	15.87	3/4	19.05	29/32	23.02	1 1/8	1 1/8	7/32	5.56	7/32	5.56	1 1/4	31.75
21/32	16.67	3/4	19.05	29/32	23.02	1 1/8	1 1/8	7/32	5.56	7/32	5.56	1 1/4	31.75
11/16	17.46	3/4	19.05	29/32	23.02	1 1/8	1 1/8	7/32	5.56	7/32	5.56	1 1/4	31.75
23/32	18.26	3/4	19.05	29/32	23.02	1 1/8	1 1/8	7/32	5.56	7/32	5.56	1 1/4	31.75
3/4	19.05	3/4	19.05	29/32	23.02	1 1/8	1 1/8	7/32	5.56	7/32	5.56	1 1/4	31.75
3/16	4.76	3/4	19.05	15/16	23.81	1 1/8	1 1/8	7/32	5.56	7/32	5.56	1 1/4	31.75
7/32	5.56	3/4	19.05	15/16	23.81	1 1/8	1 1/8	7/32	5.56	7/32	5.56	1 1/4	31.75
1/4	6.35	3/4	19.05	15/16	23.81	1 1/8	1 1/8	7/32	5.56	7/32	5.56	1 1/4	31.75
9/32	7.14	3/4	19.05	15/16	23.81	1 1/8	1 1/8	7/32	5.56	7/32	5.56	1 1/4	31.75
5/16	7.94	3/4	19.05	15/16	23.81	1 1/8	1 1/8	7/32	5.56	7/32	5.56	1 1/4	31.75
11/32	8.73	3/4	19.05	15/16	23.81	1 1/8	1 1/8	7/32	5.56	7/32	5.56	1 1/4	31.75
3/8	9.52	3/4	19.05	15/16	23.81	1 1/8	1 1/8	7/32	5.56	7/32	5.56	1 1/4	31.75
13/32	10.32	3/4	19.05	15/16	23.81	1 1/8	1 1/8	7/32	5.56	7/32	5.56	1 1/4	31.75
7/16	11.11	3/4	19.05	15/16	23.81	1 1/8	1 1/8	7/32	5.56	7/32	5.56	1 1/4	31.75
15/32	11.91	3/4	19.05	15/16	23.81	1 1/8	1 1/8	7/32	5.56	7/32	5.56	1 1/4	31.75
1/2	12.70	3/4	19.05	15/16	23.81	1 1/8	1 1/8	7/32	5.56	7/32	5.56	1 1/4	31.75
17/32	13.49	3/4	19.05	15/16	23.81	1 1/8	1 1/8	7/32	5.56	7/32	5.56	1 1/4	31.75
9/16	14.29	3/4	19.05	15/16	23.81	1 1/8	1 1/8	7/32	5.56	7/32	5.56	1 1/4	31.75

www.globaltungsteers.com

B		E		D		M	A	L		T		C	
inch	mm	inch	mm	inch	mm	inch	inch	inch	mm	inch	mm	inch	mm
19/32	15.08	3/4	19.05	15/16	23.81	1 1/8	1 1/8	7/32	5.56	7/32	5.56	1 1/4	31.75
5/8	15.87	3/4	19.05	15/16	23.81	1 1/8	1 1/8	7/32	5.56	7/32	5.56	1 1/4	31.75
21/32	16.67	3/4	19.05	15/16	23.81	1 1/8	1 1/8	7/32	5.56	7/32	5.56	1 1/4	31.75
11/16	17.46	3/4	19.05	15/16	23.81	1 1/8	1 1/8	7/32	5.56	7/32	5.56	1 1/4	31.75
23/32	18.26	3/4	19.05	15/16	23.81	1 1/8	1 1/8	7/32	5.56	7/32	5.56	1 1/4	31.75
3/4	19.05	3/4	19.05	15/16	23.81	1 1/8	1 1/8	7/32	5.56	7/32	5.56	1 1/4	31.75
3/16	4.76	5/8	15.87	25/32	19.84	1 1/8	1 1/8	7/32	5.56	7/32	5.56	1 1/4	31.75
3/16	4.76	5/8	15.87	13/16	20.64	1 1/8	1 1/8	7/32	5.56	7/32	5.56	1 1/4	31.75
3/16	4.76	5/8	15.87	27/32	21.43	1 1/8	1 1/8	7/32	5.56	7/32	5.56	1 1/4	31.75
3/16	4.76	5/8	15.87	7/8	22.22	1 1/8	1 1/8	7/32	5.56	7/32	5.56	1 1/4	31.75
3/16	4.76	5/8	15.87	29/32	23.02	1 1/8	1 1/8	7/32	5.56	7/32	5.56	1 1/4	31.75
3/16	4.76	5/8	15.87	15/16	23.81	1 1/8	1 1/8	7/32	5.56	7/32	5.56	1 1/4	31.75
7/32	5.56	5/8	15.87	25/32	19.84	1 1/8	1 1/8	7/32	5.56	7/32	5.56	1 1/4	31.75
7/32	5.56	5/8	15.87	13/16	20.64	1 1/8	1 1/8	7/32	5.56	7/32	5.56	1 1/4	31.75
7/32	5.56	5/8	15.87	27/32	21.43	1 1/8	1 1/8	7/32	5.56	7/32	5.56	1 1/4	31.75
7/32	5.56	5/8	15.87	7/8	22.22	1 1/8	1 1/8	7/32	5.56	7/32	5.56	1 1/4	31.75
7/32	5.56	5/8	15.87	29/32	23.02	1 1/8	1 1/8	7/32	5.56	7/32	5.56	1 1/4	31.75
7/32	5.56	5/8	15.87	15/16	23.81	1 1/8	1 1/8	7/32	5.56	7/32	5.56	1 1/4	31.75
1/4	6.35	5/8	15.87	25/32	19.84	1 1/8	1 1/8	7/32	5.56	7/32	5.56	1 1/4	31.75
1/4	6.35	5/8	15.87	13/16	20.64	1 1/8	1 1/8	7/32	5.56	7/32	5.56	1 1/4	31.75
1/4	6.35	5/8	15.87	27/32	21.43	1 1/8	1 1/8	7/32	5.56	7/32	5.56	1 1/4	31.75
1/4	6.35	5/8	15.87	7/8	22.22	1 1/8	1 1/8	7/32	5.56	7/32	5.56	1 1/4	31.75
1/4	6.35	5/8	15.87	29/32	23.02	1 1/8	1 1/8	7/32	5.56	7/32	5.56	1 1/4	31.75
1/4	6.35	5/8	15.87	15/16	23.81	1 1/8	1 1/8	7/32	5.56	7/32	5.56	1 1/4	31.75
9/32	7.14	5/8	15.87	25/32	19.84	1 1/8	1 1/8	7/32	5.56	7/32	5.56	1 1/4	31.75
9/32	7.14	5/8	15.87	13/16	20.64	1 1/8	1 1/8	7/32	5.56	7/32	5.56	1 1/4	31.75
9/32	7.14	5/8	15.87	27/32	21.43	1 1/8	1 1/8	7/32	5.56	7/32	5.56	1 1/4	31.75
9/32	7.14	5/8	15.87	7/8	22.22	1 1/8	1 1/8	7/32	5.56	7/32	5.56	1 1/4	31.75
9/32	7.14	5/8	15.87	29/32	23.02	1 1/8	1 1/8	7/32	5.56	7/32	5.56	1 1/4	31.75
9/32	7.14	5/8	15.87	15/16	23.81	1 1/8	1 1/8	7/32	5.56	7/32	5.56	1 1/4	31.75
5/16	7.94	5/8	15.87	25/32	19.84	1 1/8	1 1/8	7/32	5.56	7/32	5.56	1 1/4	31.75
5/16	7.94	5/8	15.87	13/16	20.64	1 1/8	1 1/8	7/32	5.56	7/32	5.56	1 1/4	31.75
5/16	7.94	5/8	15.87	27/32	21.43	1 1/8	1 1/8	7/32	5.56	7/32	5.56	1 1/4	31.75
5/16	7.94	5/8	15.87	7/8	22.22	1 1/8	1 1/8	7/32	5.56	7/32	5.56	1 1/4	31.75
5/16	7.94	5/8	15.87	29/32	23.02	1 1/8	1 1/8	7/32	5.56	7/32	5.56	1 1/4	31.75
5/16	7.94	5/8	15.87	15/16	23.81	1 1/8	1 1/8	7/32	5.56	7/32	5.56	1 1/4	31.75
11/32	8.73	5/8	15.87	25/32	19.84	1 1/8	1 1/8	7/32	5.56	7/32	5.56	1 1/4	31.75
11/32	8.73	5/8	15.87	13/16	20.64	1 1/8	1 1/8	7/32	5.56	7/32	5.56	1 1/4	31.75
11/32	8.73	5/8	15.87	27/32	21.43	1 1/8	1 1/8	7/32	5.56	7/32	5.56	1 1/4	31.75
11/32	8.73	5/8	15.87	7/8	22.22	1 1/8	1 1/8	7/32	5.56	7/32	5.56	1 1/4	31.75
11/32	8.73	5/8	15.87	29/32	23.02	1 1/8	1 1/8	7/32	5.56	7/32	5.56	1 1/4	31.75
11/32	8.73	5/8	15.87	15/16	23.81	1 1/8	1 1/8	7/32	5.56	7/32	5.56	1 1/4	31.75
3/8	9.52	5/8	15.87	25/32	19.84	1 1/8	1 1/8	7/32	5.56	7/32	5.56	1 1/4	31.75
3/8	9.52	5/8	15.87	13/16	20.64	1 1/8	1 1/8	7/32	5.56	7/32	5.56	1 1/4	31.75
3/8	9.52	5/8	15.87	27/32	21.43	1 1/8	1 1/8	7/32	5.56	7/32	5.56	1 1/4	31.75

www.globaltungsten.com

B		E		D		M	A	L		T		C	
inch	mm	inch	mm	inch	mm	inch	inch	inch	mm	inch	mm	inch	mm
3/8	9.52	5/8	15.87	7/8	22.22	1 1/8	1 1/8	7/32	5.56	7/32	5.56	1 1/4	31.75
3/8	9.52	5/8	15.87	29/32	23.02	1 1/8	1 1/8	7/32	5.56	7/32	5.56	1 1/4	31.75
3/8	9.52	5/8	15.87	15/16	23.81	1 1/8	1 1/8	7/32	5.56	7/32	5.56	1 1/4	31.75
13/32	10.32	5/8	15.87	25/32	19.84	1 1/8	1 1/8	7/32	5.56	7/32	5.56	1 1/4	31.75
13/32	10.32	5/8	15.87	13/16	20.64	1 1/8	1 1/8	7/32	5.56	7/32	5.56	1 1/4	31.75
13/32	10.32	5/8	15.87	27/32	21.43	1 1/8	1 1/8	7/32	5.56	7/32	5.56	1 1/4	31.75
13/32	10.32	5/8	15.87	7/8	22.22	1 1/8	1 1/8	7/32	5.56	7/32	5.56	1 1/4	31.75
13/32	10.32	5/8	15.87	29/32	23.02	1 1/8	1 1/8	7/32	5.56	7/32	5.56	1 1/4	31.75
13/32	10.32	5/8	15.87	15/16	23.81	1 1/8	1 1/8	7/32	5.56	7/32	5.56	1 1/4	31.75
7/16	11.11	5/8	15.87	25/32	19.84	1 1/8	1 1/8	7/32	5.56	7/32	5.56	1 1/4	31.75
7/16	11.11	5/8	15.87	13/16	20.64	1 1/8	1 1/8	7/32	5.56	7/32	5.56	1 1/4	31.75
7/16	11.11	5/8	15.87	27/32	21.43	1 1/8	1 1/8	7/32	5.56	7/32	5.56	1 1/4	31.75
7/16	11.11	5/8	15.87	7/8	22.22	1 1/8	1 1/8	7/32	5.56	7/32	5.56	1 1/4	31.75
7/16	11.11	5/8	15.87	29/32	23.02	1 1/8	1 1/8	7/32	5.56	7/32	5.56	1 1/4	31.75
7/16	11.11	5/8	15.87	15/16	23.81	1 1/8	1 1/8	7/32	5.56	7/32	5.56	1 1/4	31.75
15/32	11.91	5/8	15.87	25/32	19.84	1 1/8	1 1/8	7/32	5.56	7/32	5.56	1 1/4	31.75
15/32	11.91	5/8	15.87	13/16	20.64	1 1/8	1 1/8	7/32	5.56	7/32	5.56	1 1/4	31.75
15/32	11.91	5/8	15.87	27/32	21.43	1 1/8	1 1/8	7/32	5.56	7/32	5.56	1 1/4	31.75
15/32	11.91	5/8	15.87	7/8	22.22	1 1/8	1 1/8	7/32	5.56	7/32	5.56	1 1/4	31.75
15/32	11.91	5/8	15.87	29/32	23.02	1 1/8	1 1/8	7/32	5.56	7/32	5.56	1 1/4	31.75
15/32	11.91	5/8	15.87	15/16	23.81	1 1/8	1 1/8	7/32	5.56	7/32	5.56	1 1/4	31.75
1/2	12.70	5/8	15.87	25/32	19.84	1 1/8	1 1/8	7/32	5.56	7/32	5.56	1 1/4	31.75
1/2	12.70	5/8	15.87	13/16	20.64	1 1/8	1 1/8	7/32	5.56	7/32	5.56	1 1/4	31.75
1/2	12.70	5/8	15.87	27/32	21.43	1 1/8	1 1/8	7/32	5.56	7/32	5.56	1 1/4	31.75
1/2	12.70	5/8	15.87	7/8	22.22	1 1/8	1 1/8	7/32	5.56	7/32	5.56	1 1/4	31.75
1/2	12.70	5/8	15.87	29/32	23.02	1 1/8	1 1/8	7/32	5.56	7/32	5.56	1 1/4	31.75
1/2	12.70	5/8	15.87	15/16	23.81	1 1/8	1 1/8	7/32	5.56	7/32	5.56	1 1/4	31.75
17/32	13.49	5/8	15.87	25/32	19.84	1 1/8	1 1/8	7/32	5.56	7/32	5.56	1 1/4	31.75
17/32	13.49	5/8	15.87	13/16	20.64	1 1/8	1 1/8	7/32	5.56	7/32	5.56	1 1/4	31.75
17/32	13.49	5/8	15.87	27/32	21.43	1 1/8	1 1/8	7/32	5.56	7/32	5.56	1 1/4	31.75
17/32	13.49	5/8	15.87	7/8	22.22	1 1/8	1 1/8	7/32	5.56	7/32	5.56	1 1/4	31.75
17/32	13.49	5/8	15.87	29/32	23.02	1 1/8	1 1/8	7/32	5.56	7/32	5.56	1 1/4	31.75
17/32	13.49	5/8	15.87	15/16	23.81	1 1/8	1 1/8	7/32	5.56	7/32	5.56	1 1/4	31.75
9/16	14.29	5/8	15.87	25/32	19.84	1 1/8	1 1/8	7/32	5.56	7/32	5.56	1 1/4	31.75
9/16	14.29	5/8	15.87	13/16	20.64	1 1/8	1 1/8	7/32	5.56	7/32	5.56	1 1/4	31.75
9/16	14.29	5/8	15.87	27/32	21.43	1 1/8	1 1/8	7/32	5.56	7/32	5.56	1 1/4	31.75
9/16	14.29	5/8	15.87	7/8	22.22	1 1/8	1 1/8	7/32	5.56	7/32	5.56	1 1/4	31.75
9/16	14.29	5/8	15.87	29/32	23.02	1 1/8	1 1/8	7/32	5.56	7/32	5.56	1 1/4	31.75
9/16	14.29	5/8	15.87	15/16	23.81	1 1/8	1 1/8	7/32	5.56	7/32	5.56	1 1/4	31.75
19/32	15.08	5/8	15.87	25/32	19.84	1 1/8	1 1/8	7/32	5.56	7/32	5.56	1 1/4	31.75
19/32	15.08	5/8	15.87	13/16	20.64	1 1/8	1 1/8	7/32	5.56	7/32	5.56	1 1/4	31.75
19/32	15.08	5/8	15.87	27/32	21.43	1 1/8	1 1/8	7/32	5.56	7/32	5.56	1 1/4	31.75
19/32	15.08	5/8	15.87	7/8	22.22	1 1/8	1 1/8	7/32	5.56	7/32	5.56	1 1/4	31.75
19/32	15.08	5/8	15.87	29/32	23.02	1 1/8	1 1/8	7/32	5.56	7/32	5.56	1 1/4	31.75
19/32	15.08	5/8	15.87	15/16	23.81	1 1/8	1 1/8	7/32	5.56	7/32	5.56	1 1/4	31.75

www.globaltungsteels.com

B		E		D		M	A	L		T		C	
inch	mm	inch	mm	inch	mm	inch	inch	inch	mm	inch	mm	inch	mm
5/8	15.87	5/8	15.87	25/32	19.84	1 1/8	1 1/8	7/32	5.56	7/32	5.56	1 1/4	31.75
5/8	15.87	5/8	15.87	13/16	20.64	1 1/8	1 1/8	7/32	5.56	7/32	5.56	1 1/4	31.75
5/8	15.87	5/8	15.87	27/32	21.43	1 1/8	1 1/8	7/32	5.56	7/32	5.56	1 1/4	31.75
5/8	15.87	5/8	15.87	7/8	22.22	1 1/8	1 1/8	7/32	5.56	7/32	5.56	1 1/4	31.75
5/8	15.87	5/8	15.87	29/32	23.02	1 1/8	1 1/8	7/32	5.56	7/32	5.56	1 1/4	31.75
5/8	15.87	5/8	15.87	15/16	23.81	1 1/8	1 1/8	7/32	5.56	7/32	5.56	1 1/4	31.75
3/16	4.76	1/2	12.70	21/32	16.67	1 1/8	1 1/8	7/32	5.56	7/32	5.56	1 1/4	31.75
3/16	4.76	1/2	12.70	11/16	17.46	1 1/8	1 1/8	7/32	5.56	7/32	5.56	1 1/4	31.75
3/16	4.76	1/2	12.70	23/32	18.26	1 1/8	1 1/8	7/32	5.56	7/32	5.56	1 1/4	31.75
3/16	4.76	1/2	12.70	3/4	19.05	1 1/8	1 1/8	7/32	5.56	7/32	5.56	1 1/4	31.75
3/16	4.76	1/2	12.70	25/32	19.84	1 1/8	1 1/8	7/32	5.56	7/32	5.56	1 1/4	31.75
3/16	4.76	1/2	12.70	13/16	20.64	1 1/8	1 1/8	7/32	5.56	7/32	5.56	1 1/4	31.75
3/16	4.76	1/2	12.70	27/32	21.43	1 1/8	1 1/8	7/32	5.56	7/32	5.56	1 1/4	31.75
3/16	4.76	1/2	12.70	7/8	22.22	1 1/8	1 1/8	7/32	5.56	7/32	5.56	1 1/4	31.75
3/16	4.76	1/2	12.70	29/32	23.02	1 1/8	1 1/8	7/32	5.56	7/32	5.56	1 1/4	31.75
3/16	4.76	1/2	12.70	15/16	23.81	1 1/8	1 1/8	7/32	5.56	7/32	5.56	1 1/4	31.75
7/32	5.56	1/2	12.70	21/32	16.67	1 1/8	1 1/8	7/32	5.56	7/32	5.56	1 1/4	31.75
7/32	5.56	1/2	12.70	11/16	17.46	1 1/8	1 1/8	7/32	5.56	7/32	5.56	1 1/4	31.75
7/32	5.56	1/2	12.70	23/32	18.26	1 1/8	1 1/8	7/32	5.56	7/32	5.56	1 1/4	31.75
7/32	5.56	1/2	12.70	3/4	19.05	1 1/8	1 1/8	7/32	5.56	7/32	5.56	1 1/4	31.75
7/32	5.56	1/2	12.70	25/32	19.84	1 1/8	1 1/8	7/32	5.56	7/32	5.56	1 1/4	31.75
7/32	5.56	1/2	12.70	13/16	20.64	1 1/8	1 1/8	7/32	5.56	7/32	5.56	1 1/4	31.75
7/32	5.56	1/2	12.70	27/32	21.43	1 1/8	1 1/8	7/32	5.56	7/32	5.56	1 1/4	31.75
7/32	5.56	1/2	12.70	7/8	22.22	1 1/8	1 1/8	7/32	5.56	7/32	5.56	1 1/4	31.75
7/32	5.56	1/2	12.70	29/32	23.02	1 1/8	1 1/8	7/32	5.56	7/32	5.56	1 1/4	31.75
7/32	5.56	1/2	12.70	15/16	23.81	1 1/8	1 1/8	7/32	5.56	7/32	5.56	1 1/4	31.75
1/4	6.35	1/2	12.70	21/32	16.67	1 1/8	1 1/8	7/32	5.56	7/32	5.56	1 1/4	31.75
1/4	6.35	1/2	12.70	11/16	17.46	1 1/8	1 1/8	7/32	5.56	7/32	5.56	1 1/4	31.75
1/4	6.35	1/2	12.70	23/32	18.26	1 1/8	1 1/8	7/32	5.56	7/32	5.56	1 1/4	31.75
1/4	6.35	1/2	12.70	3/4	19.05	1 1/8	1 1/8	7/32	5.56	7/32	5.56	1 1/4	31.75
1/4	6.35	1/2	12.70	25/32	19.84	1 1/8	1 1/8	7/32	5.56	7/32	5.56	1 1/4	31.75
1/4	6.35	1/2	12.70	13/16	20.64	1 1/8	1 1/8	7/32	5.56	7/32	5.56	1 1/4	31.75
1/4	6.35	1/2	12.70	27/32	21.43	1 1/8	1 1/8	7/32	5.56	7/32	5.56	1 1/4	31.75
1/4	6.35	1/2	12.70	7/8	22.22	1 1/8	1 1/8	7/32	5.56	7/32	5.56	1 1/4	31.75
1/4	6.35	1/2	12.70	29/32	23.02	1 1/8	1 1/8	7/32	5.56	7/32	5.56	1 1/4	31.75
1/4	6.35	1/2	12.70	15/16	23.81	1 1/8	1 1/8	7/32	5.56	7/32	5.56	1 1/4	31.75
9/32	7.14	1/2	12.70	21/32	16.67	1 1/8	1 1/8	7/32	5.56	7/32	5.56	1 1/4	31.75
9/32	7.14	1/2	12.70	11/16	17.46	1 1/8	1 1/8	7/32	5.56	7/32	5.56	1 1/4	31.75
9/32	7.14	1/2	12.70	23/32	18.26	1 1/8	1 1/8	7/32	5.56	7/32	5.56	1 1/4	31.75
9/32	7.14	1/2	12.70	3/4	19.05	1 1/8	1 1/8	7/32	5.56	7/32	5.56	1 1/4	31.75
9/32	7.14	1/2	12.70	25/32	19.84	1 1/8	1 1/8	7/32	5.56	7/32	5.56	1 1/4	31.75
9/32	7.14	1/2	12.70	13/16	20.64	1 1/8	1 1/8	7/32	5.56	7/32	5.56	1 1/4	31.75
9/32	7.14	1/2	12.70	27/32	21.43	1 1/8	1 1/8	7/32	5.56	7/32	5.56	1 1/4	31.75
9/32	7.14	1/2	12.70	7/8	22.22	1 1/8	1 1/8	7/32	5.56	7/32	5.56	1 1/4	31.75
9/32	7.14	1/2	12.70	29/32	23.02	1 1/8	1 1/8	7/32	5.56	7/32	5.56	1 1/4	31.75

www.globaltungsten.com

B		E		D		M	A	L		T		C	
inch	mm	inch	mm	inch	mm	inch	inch	inch	mm	inch	mm	inch	mm
9/32	7.14	1/2	12.70	15/16	23.81	1 1/8	1 1/8	7/32	5.56	7/32	5.56	1 1/4	31.75
5/16	7.94	1/2	12.70	21/32	16.67	1 1/8	1 1/8	7/32	5.56	7/32	5.56	1 1/4	31.75
5/16	7.94	1/2	12.70	11/16	17.46	1 1/8	1 1/8	7/32	5.56	7/32	5.56	1 1/4	31.75
5/16	7.94	1/2	12.70	23/32	18.26	1 1/8	1 1/8	7/32	5.56	7/32	5.56	1 1/4	31.75
5/16	7.94	1/2	12.70	3/4	19.05	1 1/8	1 1/8	7/32	5.56	7/32	5.56	1 1/4	31.75
5/16	7.94	1/2	12.70	25/32	19.84	1 1/8	1 1/8	7/32	5.56	7/32	5.56	1 1/4	31.75
5/16	7.94	1/2	12.70	13/16	20.64	1 1/8	1 1/8	7/32	5.56	7/32	5.56	1 1/4	31.75
5/16	7.94	1/2	12.70	27/32	21.43	1 1/8	1 1/8	7/32	5.56	7/32	5.56	1 1/4	31.75
5/16	7.94	1/2	12.70	7/8	22.22	1 1/8	1 1/8	7/32	5.56	7/32	5.56	1 1/4	31.75
5/16	7.94	1/2	12.70	29/32	23.02	1 1/8	1 1/8	7/32	5.56	7/32	5.56	1 1/4	31.75
5/16	7.94	1/2	12.70	15/16	23.81	1 1/8	1 1/8	7/32	5.56	7/32	5.56	1 1/4	31.75
11/32	8.73	1/2	12.70	21/32	16.67	1 1/8	1 1/8	7/32	5.56	7/32	5.56	1 1/4	31.75
11/32	8.73	1/2	12.70	11/16	17.46	1 1/8	1 1/8	7/32	5.56	7/32	5.56	1 1/4	31.75
11/32	8.73	1/2	12.70	23/32	18.26	1 1/8	1 1/8	7/32	5.56	7/32	5.56	1 1/4	31.75
11/32	8.73	1/2	12.70	3/4	19.05	1 1/8	1 1/8	7/32	5.56	7/32	5.56	1 1/4	31.75
11/32	8.73	1/2	12.70	25/32	19.84	1 1/8	1 1/8	7/32	5.56	7/32	5.56	1 1/4	31.75
11/32	8.73	1/2	12.70	13/16	20.64	1 1/8	1 1/8	7/32	5.56	7/32	5.56	1 1/4	31.75
11/32	8.73	1/2	12.70	27/32	21.43	1 1/8	1 1/8	7/32	5.56	7/32	5.56	1 1/4	31.75
11/32	8.73	1/2	12.70	7/8	22.22	1 1/8	1 1/8	7/32	5.56	7/32	5.56	1 1/4	31.75
11/32	8.73	1/2	12.70	29/32	23.02	1 1/8	1 1/8	7/32	5.56	7/32	5.56	1 1/4	31.75
11/32	8.73	1/2	12.70	15/16	23.81	1 1/8	1 1/8	7/32	5.56	7/32	5.56	1 1/4	31.75
3/8	9.52	1/2	12.70	21/32	16.67	1 1/8	1 1/8	7/32	5.56	7/32	5.56	1 1/4	31.75
3/8	9.52	1/2	12.70	11/16	17.46	1 1/8	1 1/8	7/32	5.56	7/32	5.56	1 1/4	31.75
3/8	9.52	1/2	12.70	23/32	18.26	1 1/8	1 1/8	7/32	5.56	7/32	5.56	1 1/4	31.75
3/8	9.52	1/2	12.70	3/4	19.05	1 1/8	1 1/8	7/32	5.56	7/32	5.56	1 1/4	31.75
3/8	9.52	1/2	12.70	25/32	19.84	1 1/8	1 1/8	7/32	5.56	7/32	5.56	1 1/4	31.75
3/8	9.52	1/2	12.70	13/16	20.64	1 1/8	1 1/8	7/32	5.56	7/32	5.56	1 1/4	31.75
3/8	9.52	1/2	12.70	27/32	21.43	1 1/8	1 1/8	7/32	5.56	7/32	5.56	1 1/4	31.75
3/8	9.52	1/2	12.70	7/8	22.22	1 1/8	1 1/8	7/32	5.56	7/32	5.56	1 1/4	31.75
3/8	9.52	1/2	12.70	29/32	23.02	1 1/8	1 1/8	7/32	5.56	7/32	5.56	1 1/4	31.75
3/8	9.52	1/2	12.70	15/16	23.81	1 1/8	1 1/8	7/32	5.56	7/32	5.56	1 1/4	31.75
13/32	10.32	1/2	12.70	21/32	16.67	1 1/8	1 1/8	7/32	5.56	7/32	5.56	1 1/4	31.75
13/32	10.32	1/2	12.70	11/16	17.46	1 1/8	1 1/8	7/32	5.56	7/32	5.56	1 1/4	31.75
13/32	10.32	1/2	12.70	23/32	18.26	1 1/8	1 1/8	7/32	5.56	7/32	5.56	1 1/4	31.75
13/32	10.32	1/2	12.70	3/4	19.05	1 1/8	1 1/8	7/32	5.56	7/32	5.56	1 1/4	31.75
13/32	10.32	1/2	12.70	25/32	19.84	1 1/8	1 1/8	7/32	5.56	7/32	5.56	1 1/4	31.75
13/32	10.32	1/2	12.70	13/16	20.64	1 1/8	1 1/8	7/32	5.56	7/32	5.56	1 1/4	31.75
13/32	10.32	1/2	12.70	27/32	21.43	1 1/8	1 1/8	7/32	5.56	7/32	5.56	1 1/4	31.75
13/32	10.32	1/2	12.70	7/8	22.22	1 1/8	1 1/8	7/32	5.56	7/32	5.56	1 1/4	31.75
13/32	10.32	1/2	12.70	29/32	23.02	1 1/8	1 1/8	7/32	5.56	7/32	5.56	1 1/4	31.75
13/32	10.32	1/2	12.70	15/16	23.81	1 1/8	1 1/8	7/32	5.56	7/32	5.56	1 1/4	31.75
7/16	11.11	1/2	12.70	21/32	16.67	1 1/8	1 1/8	7/32	5.56	7/32	5.56	1 1/4	31.75
7/16	11.11	1/2	12.70	11/16	17.46	1 1/8	1 1/8	7/32	5.56	7/32	5.56	1 1/4	31.75
7/16	11.11	1/2	12.70	23/32	18.26	1 1/8	1 1/8	7/32	5.56	7/32	5.56	1 1/4	31.75
7/16	11.11	1/2	12.70	3/4	19.05	1 1/8	1 1/8	7/32	5.56	7/32	5.56	1 1/4	31.75

www.globaltungsten.com

B		E		D		M	A	L		T		C	
inch	mm	inch	mm	inch	mm	inch	inch	inch	mm	inch	mm	inch	mm
7/16	11.11	1/2	12.70	25/32	19.84	1 1/8	1 1/8	7/32	5.56	7/32	5.56	1 1/4	31.75
7/16	11.11	1/2	12.70	13/16	20.64	1 1/8	1 1/8	7/32	5.56	7/32	5.56	1 1/4	31.75
7/16	11.11	1/2	12.70	27/32	21.43	1 1/8	1 1/8	7/32	5.56	7/32	5.56	1 1/4	31.75
7/16	11.11	1/2	12.70	7/8	22.22	1 1/8	1 1/8	7/32	5.56	7/32	5.56	1 1/4	31.75
7/16	11.11	1/2	12.70	29/32	23.02	1 1/8	1 1/8	7/32	5.56	7/32	5.56	1 1/4	31.75
7/16	11.11	1/2	12.70	15/16	23.81	1 1/8	1 1/8	7/32	5.56	7/32	5.56	1 1/4	31.75
15/32	11.91	1/2	12.70	21/32	16.67	1 1/8	1 1/8	7/32	5.56	7/32	5.56	1 1/4	31.75
15/32	11.91	1/2	12.70	11/16	17.46	1 1/8	1 1/8	7/32	5.56	7/32	5.56	1 1/4	31.75
15/32	11.91	1/2	12.70	23/32	18.26	1 1/8	1 1/8	7/32	5.56	7/32	5.56	1 1/4	31.75
15/32	11.91	1/2	12.70	3/4	19.05	1 1/8	1 1/8	7/32	5.56	7/32	5.56	1 1/4	31.75
15/32	11.91	1/2	12.70	25/32	19.84	1 1/8	1 1/8	7/32	5.56	7/32	5.56	1 1/4	31.75
15/32	11.91	1/2	12.70	13/16	20.64	1 1/8	1 1/8	7/32	5.56	7/32	5.56	1 1/4	31.75
15/32	11.91	1/2	12.70	27/32	21.43	1 1/8	1 1/8	7/32	5.56	7/32	5.56	1 1/4	31.75
15/32	11.91	1/2	12.70	7/8	22.22	1 1/8	1 1/8	7/32	5.56	7/32	5.56	1 1/4	31.75
15/32	11.91	1/2	12.70	29/32	23.02	1 1/8	1 1/8	7/32	5.56	7/32	5.56	1 1/4	31.75
15/32	11.91	1/2	12.70	15/16	23.81	1 1/8	1 1/8	7/32	5.56	7/32	5.56	1 1/4	31.75
1/2	12.70	1/2	12.70	21/32	16.67	1 1/8	1 1/8	7/32	5.56	7/32	5.56	1 1/4	31.75
1/2	12.70	1/2	12.70	11/16	17.46	1 1/8	1 1/8	7/32	5.56	7/32	5.56	1 1/4	31.75
1/2	12.70	1/2	12.70	23/32	18.26	1 1/8	1 1/8	7/32	5.56	7/32	5.56	1 1/4	31.75
1/2	12.70	1/2	12.70	3/4	19.05	1 1/8	1 1/8	7/32	5.56	7/32	5.56	1 1/4	31.75
1/2	12.70	1/2	12.70	25/32	19.84	1 1/8	1 1/8	7/32	5.56	7/32	5.56	1 1/4	31.75
1/2	12.70	1/2	12.70	13/16	20.64	1 1/8	1 1/8	7/32	5.56	7/32	5.56	1 1/4	31.75
1/2	12.70	1/2	12.70	27/32	21.43	1 1/8	1 1/8	7/32	5.56	7/32	5.56	1 1/4	31.75
1/2	12.70	1/2	12.70	7/8	22.22	1 1/8	1 1/8	7/32	5.56	7/32	5.56	1 1/4	31.75
1/2	12.70	1/2	12.70	29/32	23.02	1 1/8	1 1/8	7/32	5.56	7/32	5.56	1 1/4	31.75
1/2	12.70	1/2	12.70	15/16	23.81	1 1/8	1 1/8	7/32	5.56	7/32	5.56	1 1/4	31.75
3/16	4.76	3/8	9.52	19/32	15.08	1 1/8	1 1/8	7/32	5.56	7/32	5.56	1 1/4	31.75
3/16	4.76	3/8	9.52	5/8	15.87	1 1/8	1 1/8	7/32	5.56	7/32	5.56	1 1/4	31.75
3/16	4.76	3/8	9.52	21/32	16.67	1 1/8	1 1/8	7/32	5.56	7/32	5.56	1 1/4	31.75
3/16	4.76	3/8	9.52	11/16	17.46	1 1/8	1 1/8	7/32	5.56	7/32	5.56	1 1/4	31.75
3/16	4.76	3/8	9.52	23/32	18.26	1 1/8	1 1/8	7/32	5.56	7/32	5.56	1 1/4	31.75
3/16	4.76	3/8	9.52	3/4	19.05	1 1/8	1 1/8	7/32	5.56	7/32	5.56	1 1/4	31.75
3/16	4.76	3/8	9.52	25/32	19.84	1 1/8	1 1/8	7/32	5.56	7/32	5.56	1 1/4	31.75
3/16	4.76	3/8	9.52	13/16	20.64	1 1/8	1 1/8	7/32	5.56	7/32	5.56	1 1/4	31.75
3/16	4.76	3/8	9.52	27/32	21.43	1 1/8	1 1/8	7/32	5.56	7/32	5.56	1 1/4	31.75
3/16	4.76	3/8	9.52	7/8	22.22	1 1/8	1 1/8	7/32	5.56	7/32	5.56	1 1/4	31.75
3/16	4.76	3/8	9.52	29/32	23.02	1 1/8	1 1/8	7/32	5.56	7/32	5.56	1 1/4	31.75
3/16	4.76	3/8	9.52	15/16	23.81	1 1/8	1 1/8	7/32	5.56	7/32	5.56	1 1/4	31.75
7/32	5.56	3/8	9.52	19/32	15.08	1 1/8	1 1/8	7/32	5.56	7/32	5.56	1 1/4	31.75
7/32	5.56	3/8	9.52	5/8	15.87	1 1/8	1 1/8	7/32	5.56	7/32	5.56	1 1/4	31.75
7/32	5.56	3/8	9.52	21/32	16.67	1 1/8	1 1/8	7/32	5.56	7/32	5.56	1 1/4	31.75
7/32	5.56	3/8	9.52	11/16	17.46	1 1/8	1 1/8	7/32	5.56	7/32	5.56	1 1/4	31.75
7/32	5.56	3/8	9.52	23/32	18.26	1 1/8	1 1/8	7/32	5.56	7/32	5.56	1 1/4	31.75
7/32	5.56	3/8	9.52	3/4	19.05	1 1/8	1 1/8	7/32	5.56	7/32	5.56	1 1/4	31.75
7/32	5.56	3/8	9.52	25/32	19.84	1 1/8	1 1/8	7/32	5.56	7/32	5.56	1 1/4	31.75

www.globaltungsteris.com

B		E		D		M	A	L		T		C	
inch	mm	inch	mm	inch	mm	inch	inch	inch	mm	inch	mm	inch	mm
7/32	5.56	3/8	9.52	13/16	20.64	1 1/8	1 1/8	7/32	5.56	7/32	5.56	1 1/4	31.75
7/32	5.56	3/8	9.52	27/32	21.43	1 1/8	1 1/8	7/32	5.56	7/32	5.56	1 1/4	31.75
7/32	5.56	3/8	9.52	7/8	22.22	1 1/8	1 1/8	7/32	5.56	7/32	5.56	1 1/4	31.75
7/32	5.56	3/8	9.52	29/32	23.02	1 1/8	1 1/8	7/32	5.56	7/32	5.56	1 1/4	31.75
7/32	5.56	3/8	9.52	15/16	23.81	1 1/8	1 1/8	7/32	5.56	7/32	5.56	1 1/4	31.75
1/4	6.35	3/8	9.52	19/32	15.08	1 1/8	1 1/8	7/32	5.56	7/32	5.56	1 1/4	31.75
1/4	6.35	3/8	9.52	5/8	15.87	1 1/8	1 1/8	7/32	5.56	7/32	5.56	1 1/4	31.75
1/4	6.35	3/8	9.52	21/32	16.67	1 1/8	1 1/8	7/32	5.56	7/32	5.56	1 1/4	31.75
1/4	6.35	3/8	9.52	11/16	17.46	1 1/8	1 1/8	7/32	5.56	7/32	5.56	1 1/4	31.75
1/4	6.35	3/8	9.52	23/32	18.26	1 1/8	1 1/8	7/32	5.56	7/32	5.56	1 1/4	31.75
1/4	6.35	3/8	9.52	3/4	19.05	1 1/8	1 1/8	7/32	5.56	7/32	5.56	1 1/4	31.75
1/4	6.35	3/8	9.52	25/32	19.84	1 1/8	1 1/8	7/32	5.56	7/32	5.56	1 1/4	31.75
1/4	6.35	3/8	9.52	13/16	20.64	1 1/8	1 1/8	7/32	5.56	7/32	5.56	1 1/4	31.75
1/4	6.35	3/8	9.52	27/32	21.43	1 1/8	1 1/8	7/32	5.56	7/32	5.56	1 1/4	31.75
1/4	6.35	3/8	9.52	7/8	22.22	1 1/8	1 1/8	7/32	5.56	7/32	5.56	1 1/4	31.75
1/4	6.35	3/8	9.52	29/32	23.02	1 1/8	1 1/8	7/32	5.56	7/32	5.56	1 1/4	31.75
1/4	6.35	3/8	9.52	15/16	23.81	1 1/8	1 1/8	7/32	5.56	7/32	5.56	1 1/4	31.75
9/32	7.14	3/8	9.52	19/32	15.08	1 1/8	1 1/8	7/32	5.56	7/32	5.56	1 1/4	31.75
9/32	7.14	3/8	9.52	5/8	15.87	1 1/8	1 1/8	7/32	5.56	7/32	5.56	1 1/4	31.75
9/32	7.14	3/8	9.52	21/32	16.67	1 1/8	1 1/8	7/32	5.56	7/32	5.56	1 1/4	31.75
9/32	7.14	3/8	9.52	11/16	17.46	1 1/8	1 1/8	7/32	5.56	7/32	5.56	1 1/4	31.75
9/32	7.14	3/8	9.52	23/32	18.26	1 1/8	1 1/8	7/32	5.56	7/32	5.56	1 1/4	31.75
9/32	7.14	3/8	9.52	3/4	19.05	1 1/8	1 1/8	7/32	5.56	7/32	5.56	1 1/4	31.75
9/32	7.14	3/8	9.52	25/32	19.84	1 1/8	1 1/8	7/32	5.56	7/32	5.56	1 1/4	31.75
9/32	7.14	3/8	9.52	13/16	20.64	1 1/8	1 1/8	7/32	5.56	7/32	5.56	1 1/4	31.75
9/32	7.14	3/8	9.52	27/32	21.43	1 1/8	1 1/8	7/32	5.56	7/32	5.56	1 1/4	31.75
9/32	7.14	3/8	9.52	7/8	22.22	1 1/8	1 1/8	7/32	5.56	7/32	5.56	1 1/4	31.75
9/32	7.14	3/8	9.52	29/32	23.02	1 1/8	1 1/8	7/32	5.56	7/32	5.56	1 1/4	31.75
9/32	7.14	3/8	9.52	15/16	23.81	1 1/8	1 1/8	7/32	5.56	7/32	5.56	1 1/4	31.75
5/16	7.94	3/8	9.52	19/32	15.08	1 1/8	1 1/8	7/32	5.56	7/32	5.56	1 1/4	31.75
5/16	7.94	3/8	9.52	5/8	15.87	1 1/8	1 1/8	7/32	5.56	7/32	5.56	1 1/4	31.75
5/16	7.94	3/8	9.52	21/32	16.67	1 1/8	1 1/8	7/32	5.56	7/32	5.56	1 1/4	31.75
5/16	7.94	3/8	9.52	11/16	17.46	1 1/8	1 1/8	7/32	5.56	7/32	5.56	1 1/4	31.75
5/16	7.94	3/8	9.52	23/32	18.26	1 1/8	1 1/8	7/32	5.56	7/32	5.56	1 1/4	31.75
5/16	7.94	3/8	9.52	3/4	19.05	1 1/8	1 1/8	7/32	5.56	7/32	5.56	1 1/4	31.75
5/16	7.94	3/8	9.52	25/32	19.84	1 1/8	1 1/8	7/32	5.56	7/32	5.56	1 1/4	31.75
5/16	7.94	3/8	9.52	13/16	20.64	1 1/8	1 1/8	7/32	5.56	7/32	5.56	1 1/4	31.75
5/16	7.94	3/8	9.52	27/32	21.43	1 1/8	1 1/8	7/32	5.56	7/32	5.56	1 1/4	31.75
5/16	7.94	3/8	9.52	7/8	22.22	1 1/8	1 1/8	7/32	5.56	7/32	5.56	1 1/4	31.75
5/16	7.94	3/8	9.52	29/32	23.02	1 1/8	1 1/8	7/32	5.56	7/32	5.56	1 1/4	31.75
5/16	7.94	3/8	9.52	15/16	23.81	1 1/8	1 1/8	7/32	5.56	7/32	5.56	1 1/4	31.75
11/32	8.73	3/8	9.52	19/32	15.08	1 1/8	1 1/8	7/32	5.56	7/32	5.56	1 1/4	31.75
11/32	8.73	3/8	9.52	5/8	15.87	1 1/8	1 1/8	7/32	5.56	7/32	5.56	1 1/4	31.75
11/32	8.73	3/8	9.52	21/32	16.67	1 1/8	1 1/8	7/32	5.56	7/32	5.56	1 1/4	31.75
11/32	8.73	3/8	9.52	11/16	17.46	1 1/8	1 1/8	7/32	5.56	7/32	5.56	1 1/4	31.75

www.globaltungsten.com

B		E		D		M	A	L		T		C	
inch	mm	inch	mm	inch	mm	inch	inch	inch	mm	inch	mm	inch	mm
11/32	8.73	3/8	9.52	23/32	18.26	1 1/8	1 1/8	7/32	5.56	7/32	5.56	1 1/4	31.75
11/32	8.73	3/8	9.52	3/4	19.05	1 1/8	1 1/8	7/32	5.56	7/32	5.56	1 1/4	31.75
11/32	8.73	3/8	9.52	25/32	19.84	1 1/8	1 1/8	7/32	5.56	7/32	5.56	1 1/4	31.75
11/32	8.73	3/8	9.52	13/16	20.64	1 1/8	1 1/8	7/32	5.56	7/32	5.56	1 1/4	31.75
11/32	8.73	3/8	9.52	27/32	21.43	1 1/8	1 1/8	7/32	5.56	7/32	5.56	1 1/4	31.75
11/32	8.73	3/8	9.52	7/8	22.22	1 1/8	1 1/8	7/32	5.56	7/32	5.56	1 1/4	31.75
11/32	8.73	3/8	9.52	29/32	23.02	1 1/8	1 1/8	7/32	5.56	7/32	5.56	1 1/4	31.75
11/32	8.73	3/8	9.52	15/16	23.81	1 1/8	1 1/8	7/32	5.56	7/32	5.56	1 1/4	31.75
3/8	9.52	3/8	9.52	19/32	15.08	1 1/8	1 1/8	7/32	5.56	7/32	5.56	1 1/4	31.75
3/8	9.52	3/8	9.52	5/8	15.87	1 1/8	1 1/8	7/32	5.56	7/32	5.56	1 1/4	31.75
3/8	9.52	3/8	9.52	21/32	16.67	1 1/8	1 1/8	7/32	5.56	7/32	5.56	1 1/4	31.75
3/8	9.52	3/8	9.52	11/16	17.46	1 1/8	1 1/8	7/32	5.56	7/32	5.56	1 1/4	31.75
3/8	9.52	3/8	9.52	23/32	18.26	1 1/8	1 1/8	7/32	5.56	7/32	5.56	1 1/4	31.75
3/8	9.52	3/8	9.52	3/4	19.05	1 1/8	1 1/8	7/32	5.56	7/32	5.56	1 1/4	31.75
3/8	9.52	3/8	9.52	25/32	19.84	1 1/8	1 1/8	7/32	5.56	7/32	5.56	1 1/4	31.75
3/8	9.52	3/8	9.52	13/16	20.64	1 1/8	1 1/8	7/32	5.56	7/32	5.56	1 1/4	31.75
3/8	9.52	3/8	9.52	27/32	21.43	1 1/8	1 1/8	7/32	5.56	7/32	5.56	1 1/4	31.75
3/8	9.52	3/8	9.52	7/8	22.22	1 1/8	1 1/8	7/32	5.56	7/32	5.56	1 1/4	31.75
3/8	9.52	3/8	9.52	29/32	23.02	1 1/8	1 1/8	7/32	5.56	7/32	5.56	1 1/4	31.75
3/8	9.52	3/8	9.52	15/16	23.81	1 1/8	1 1/8	7/32	5.56	7/32	5.56	1 1/4	31.75
3/16	4.76	5/8	15.87	25/32	19.84	1	1	7/32	5.56	7/32	5.56	1 1/4	31.75
3/16	4.76	5/8	15.87	13/16	20.64	1	1	7/32	5.56	7/32	5.56	1 1/4	31.75
3/16	4.76	5/8	15.87	27/32	21.43	1	1	7/32	5.56	7/32	5.56	1 1/4	31.75
7/32	5.56	5/8	15.87	25/32	19.84	1	1	7/32	5.56	7/32	5.56	1 1/4	31.75
7/32	5.56	5/8	15.87	13/16	20.64	1	1	7/32	5.56	7/32	5.56	1 1/4	31.75
7/32	5.56	5/8	15.87	27/32	21.43	1	1	7/32	5.56	7/32	5.56	1 1/4	31.75
1/4	6.35	5/8	15.87	25/32	19.84	1	1	7/32	5.56	7/32	5.56	1 1/4	31.75
1/4	6.35	5/8	15.87	13/16	20.64	1	1	7/32	5.56	7/32	5.56	1 1/4	31.75
1/4	6.35	5/8	15.87	27/32	21.43	1	1	7/32	5.56	7/32	5.56	1 1/4	31.75
9/32	7.14	5/8	15.87	25/32	19.84	1	1	7/32	5.56	7/32	5.56	1 1/4	31.75
9/32	7.14	5/8	15.87	13/16	20.64	1	1	7/32	5.56	7/32	5.56	1 1/4	31.75
9/32	7.14	5/8	15.87	27/32	21.43	1	1	7/32	5.56	7/32	5.56	1 1/4	31.75
5/16	7.94	5/8	15.87	25/32	19.84	1	1	7/32	5.56	7/32	5.56	1 1/4	31.75
5/16	7.94	5/8	15.87	13/16	20.64	1	1	7/32	5.56	7/32	5.56	1 1/4	31.75
5/16	7.94	5/8	15.87	27/32	21.43	1	1	7/32	5.56	7/32	5.56	1 1/4	31.75
11/32	8.73	5/8	15.87	25/32	19.84	1	1	7/32	5.56	7/32	5.56	1 1/4	31.75
11/32	8.73	5/8	15.87	13/16	20.64	1	1	7/32	5.56	7/32	5.56	1 1/4	31.75
11/32	8.73	5/8	15.87	27/32	21.43	1	1	7/32	5.56	7/32	5.56	1 1/4	31.75
3/8	9.52	5/8	15.87	25/32	19.84	1	1	7/32	5.56	7/32	5.56	1 1/4	31.75
3/8	9.52	5/8	15.87	13/16	20.64	1	1	7/32	5.56	7/32	5.56	1 1/4	31.75
3/8	9.52	5/8	15.87	27/32	21.43	1	1	7/32	5.56	7/32	5.56	1 1/4	31.75
13/32	10.32	5/8	15.87	25/32	19.84	1	1	7/32	5.56	7/32	5.56	1 1/4	31.75
13/32	10.32	5/8	15.87	13/16	20.64	1	1	7/32	5.56	7/32	5.56	1 1/4	31.75
13/32	10.32	5/8	15.87	27/32	21.43	1	1	7/32	5.56	7/32	5.56	1 1/4	31.75
7/16	11.11	5/8	15.87	25/32	19.84	1	1	7/32	5.56	7/32	5.56	1 1/4	31.75

www.globaltungsten.com

B		E		D		M	A	L		T		C	
inch	mm	inch	mm	inch	mm	inch	inch	inch	mm	inch	mm	inch	mm
7/16	11.11	5/8	15.87	13/16	20.64	1	1	7/32	5.56	7/32	5.56	1 1/4	31.75
7/16	11.11	5/8	15.87	27/32	21.43	1	1	7/32	5.56	7/32	5.56	1 1/4	31.75
15/32	11.91	5/8	15.87	25/32	19.84	1	1	7/32	5.56	7/32	5.56	1 1/4	31.75
15/32	11.91	5/8	15.87	13/16	20.64	1	1	7/32	5.56	7/32	5.56	1 1/4	31.75
15/32	11.91	5/8	15.87	27/32	21.43	1	1	7/32	5.56	7/32	5.56	1 1/4	31.75
1/2	12.70	5/8	15.87	25/32	19.84	1	1	7/32	5.56	7/32	5.56	1 1/4	31.75
1/2	12.70	5/8	15.87	13/16	20.64	1	1	7/32	5.56	7/32	5.56	1 1/4	31.75
1/2	12.70	5/8	15.87	27/32	21.43	1	1	7/32	5.56	7/32	5.56	1 1/4	31.75
17/32	13.49	5/8	15.87	25/32	19.84	1	1	7/32	5.56	7/32	5.56	1 1/4	31.75
17/32	13.49	5/8	15.87	13/16	20.64	1	1	7/32	5.56	7/32	5.56	1 1/4	31.75
17/32	13.49	5/8	15.87	27/32	21.43	1	1	7/32	5.56	7/32	5.56	1 1/4	31.75
9/16	14.29	5/8	15.87	25/32	19.84	1	1	7/32	5.56	7/32	5.56	1 1/4	31.75
9/16	14.29	5/8	15.87	13/16	20.64	1	1	7/32	5.56	7/32	5.56	1 1/4	31.75
9/16	14.29	5/8	15.87	27/32	21.43	1	1	7/32	5.56	7/32	5.56	1 1/4	31.75
19/32	15.08	5/8	15.87	25/32	19.84	1	1	7/32	5.56	7/32	5.56	1 1/4	31.75
19/32	15.08	5/8	15.87	13/16	20.64	1	1	7/32	5.56	7/32	5.56	1 1/4	31.75
19/32	15.08	5/8	15.87	27/32	21.43	1	1	7/32	5.56	7/32	5.56	1 1/4	31.75
5/8	15.87	5/8	15.87	25/32	19.84	1	1	7/32	5.56	7/32	5.56	1 1/4	31.75
5/8	15.87	5/8	15.87	13/16	20.64	1	1	7/32	5.56	7/32	5.56	1 1/4	31.75
5/8	15.87	5/8	15.87	27/32	21.43	1	1	7/32	5.56	7/32	5.56	1 1/4	31.75
3/16	4.76	1/2	12.70	21/32	16.67	1	1	7/32	5.56	7/32	5.56	1 1/4	31.75
3/16	4.76	1/2	12.70	11/16	17.46	1	1	7/32	5.56	7/32	5.56	1 1/4	31.75
3/16	4.76	1/2	12.70	23/32	18.26	1	1	7/32	5.56	7/32	5.56	1 1/4	31.75
3/16	4.76	1/2	12.70	3/4	19.05	1	1	7/32	5.56	7/32	5.56	1 1/4	31.75
3/16	4.76	1/2	12.70	25/32	19.84	1	1	7/32	5.56	7/32	5.56	1 1/4	31.75
3/16	4.76	1/2	12.70	13/16	20.64	1	1	7/32	5.56	7/32	5.56	1 1/4	31.75
3/16	4.76	1/2	12.70	27/32	21.43	1	1	7/32	5.56	7/32	5.56	1 1/4	31.75
7/32	5.56	1/2	12.70	21/32	16.67	1	1	7/32	5.56	7/32	5.56	1 1/4	31.75
7/32	5.56	1/2	12.70	11/16	17.46	1	1	7/32	5.56	7/32	5.56	1 1/4	31.75
7/32	5.56	1/2	12.70	23/32	18.26	1	1	7/32	5.56	7/32	5.56	1 1/4	31.75
7/32	5.56	1/2	12.70	3/4	19.05	1	1	7/32	5.56	7/32	5.56	1 1/4	31.75
7/32	5.56	1/2	12.70	25/32	19.84	1	1	7/32	5.56	7/32	5.56	1 1/4	31.75
7/32	5.56	1/2	12.70	13/16	20.64	1	1	7/32	5.56	7/32	5.56	1 1/4	31.75
7/32	5.56	1/2	12.70	27/32	21.43	1	1	7/32	5.56	7/32	5.56	1 1/4	31.75
1/4	6.35	1/2	12.70	21/32	16.67	1	1	7/32	5.56	7/32	5.56	1 1/4	31.75
1/4	6.35	1/2	12.70	11/16	17.46	1	1	7/32	5.56	7/32	5.56	1 1/4	31.75
1/4	6.35	1/2	12.70	23/32	18.26	1	1	7/32	5.56	7/32	5.56	1 1/4	31.75
1/4	6.35	1/2	12.70	3/4	19.05	1	1	7/32	5.56	7/32	5.56	1 1/4	31.75
1/4	6.35	1/2	12.70	25/32	19.84	1	1	7/32	5.56	7/32	5.56	1 1/4	31.75
1/4	6.35	1/2	12.70	13/16	20.64	1	1	7/32	5.56	7/32	5.56	1 1/4	31.75
1/4	6.35	1/2	12.70	27/32	21.43	1	1	7/32	5.56	7/32	5.56	1 1/4	31.75
9/32	7.14	1/2	12.70	21/32	16.67	1	1	7/32	5.56	7/32	5.56	1 1/4	31.75
9/32	7.14	1/2	12.70	11/16	17.46	1	1	7/32	5.56	7/32	5.56	1 1/4	31.75
9/32	7.14	1/2	12.70	23/32	18.26	1	1	7/32	5.56	7/32	5.56	1 1/4	31.75
9/32	7.14	1/2	12.70	3/4	19.05	1	1	7/32	5.56	7/32	5.56	1 1/4	31.75

www.globaltungsten.com

B		E		D		M	A	L		T		C	
inch	mm	inch	mm	inch	mm	inch	inch	inch	mm	inch	mm	inch	mm
9/32	7.14	1/2	12.70	25/32	19.84	1	1	7/32	5.56	7/32	5.56	1 1/4	31.75
9/32	7.14	1/2	12.70	13/16	20.64	1	1	7/32	5.56	7/32	5.56	1 1/4	31.75
9/32	7.14	1/2	12.70	27/32	21.43	1	1	7/32	5.56	7/32	5.56	1 1/4	31.75
5/16	7.94	1/2	12.70	21/32	16.67	1	1	7/32	5.56	7/32	5.56	1 1/4	31.75
5/16	7.94	1/2	12.70	11/16	17.46	1	1	7/32	5.56	7/32	5.56	1 1/4	31.75
5/16	7.94	1/2	12.70	23/32	18.26	1	1	7/32	5.56	7/32	5.56	1 1/4	31.75
5/16	7.94	1/2	12.70	3/4	19.05	1	1	7/32	5.56	7/32	5.56	1 1/4	31.75
5/16	7.94	1/2	12.70	25/32	19.84	1	1	7/32	5.56	7/32	5.56	1 1/4	31.75
5/16	7.94	1/2	12.70	13/16	20.64	1	1	7/32	5.56	7/32	5.56	1 1/4	31.75
5/16	7.94	1/2	12.70	27/32	21.43	1	1	7/32	5.56	7/32	5.56	1 1/4	31.75
11/32	8.73	1/2	12.70	21/32	16.67	1	1	7/32	5.56	7/32	5.56	1 1/4	31.75
11/32	8.73	1/2	12.70	11/16	17.46	1	1	7/32	5.56	7/32	5.56	1 1/4	31.75
11/32	8.73	1/2	12.70	23/32	18.26	1	1	7/32	5.56	7/32	5.56	1 1/4	31.75
11/32	8.73	1/2	12.70	3/4	19.05	1	1	7/32	5.56	7/32	5.56	1 1/4	31.75
11/32	8.73	1/2	12.70	25/32	19.84	1	1	7/32	5.56	7/32	5.56	1 1/4	31.75
11/32	8.73	1/2	12.70	13/16	20.64	1	1	7/32	5.56	7/32	5.56	1 1/4	31.75
11/32	8.73	1/2	12.70	27/32	21.43	1	1	7/32	5.56	7/32	5.56	1 1/4	31.75
3/8	9.52	1/2	12.70	21/32	16.67	1	1	7/32	5.56	7/32	5.56	1 1/4	31.75
3/8	9.52	1/2	12.70	11/16	17.46	1	1	7/32	5.56	7/32	5.56	1 1/4	31.75
3/8	9.52	1/2	12.70	23/32	18.26	1	1	7/32	5.56	7/32	5.56	1 1/4	31.75
3/8	9.52	1/2	12.70	3/4	19.05	1	1	7/32	5.56	7/32	5.56	1 1/4	31.75
3/8	9.52	1/2	12.70	25/32	19.84	1	1	7/32	5.56	7/32	5.56	1 1/4	31.75
3/8	9.52	1/2	12.70	13/16	20.64	1	1	7/32	5.56	7/32	5.56	1 1/4	31.75
3/8	9.52	1/2	12.70	27/32	21.43	1	1	7/32	5.56	7/32	5.56	1 1/4	31.75
13/32	10.32	1/2	12.70	21/32	16.67	1	1	7/32	5.56	7/32	5.56	1 1/4	31.75
13/32	10.32	1/2	12.70	11/16	17.46	1	1	7/32	5.56	7/32	5.56	1 1/4	31.75
13/32	10.32	1/2	12.70	23/32	18.26	1	1	7/32	5.56	7/32	5.56	1 1/4	31.75
13/32	10.32	1/2	12.70	3/4	19.05	1	1	7/32	5.56	7/32	5.56	1 1/4	31.75
13/32	10.32	1/2	12.70	25/32	19.84	1	1	7/32	5.56	7/32	5.56	1 1/4	31.75
13/32	10.32	1/2	12.70	13/16	20.64	1	1	7/32	5.56	7/32	5.56	1 1/4	31.75
13/32	10.32	1/2	12.70	27/32	21.43	1	1	7/32	5.56	7/32	5.56	1 1/4	31.75
7/16	11.11	1/2	12.70	21/32	16.67	1	1	7/32	5.56	7/32	5.56	1 1/4	31.75
7/16	11.11	1/2	12.70	11/16	17.46	1	1	7/32	5.56	7/32	5.56	1 1/4	31.75
7/16	11.11	1/2	12.70	23/32	18.26	1	1	7/32	5.56	7/32	5.56	1 1/4	31.75
7/16	11.11	1/2	12.70	3/4	19.05	1	1	7/32	5.56	7/32	5.56	1 1/4	31.75
7/16	11.11	1/2	12.70	25/32	19.84	1	1	7/32	5.56	7/32	5.56	1 1/4	31.75
7/16	11.11	1/2	12.70	13/16	20.64	1	1	7/32	5.56	7/32	5.56	1 1/4	31.75
7/16	11.11	1/2	12.70	27/32	21.43	1	1	7/32	5.56	7/32	5.56	1 1/4	31.75
15/32	11.91	1/2	12.70	21/32	16.67	1	1	7/32	5.56	7/32	5.56	1 1/4	31.75
15/32	11.91	1/2	12.70	11/16	17.46	1	1	7/32	5.56	7/32	5.56	1 1/4	31.75
15/32	11.91	1/2	12.70	23/32	18.26	1	1	7/32	5.56	7/32	5.56	1 1/4	31.75
15/32	11.91	1/2	12.70	3/4	19.05	1	1	7/32	5.56	7/32	5.56	1 1/4	31.75
15/32	11.91	1/2	12.70	25/32	19.84	1	1	7/32	5.56	7/32	5.56	1 1/4	31.75
15/32	11.91	1/2	12.70	13/16	20.64	1	1	7/32	5.56	7/32	5.56	1 1/4	31.75
15/32	11.91	1/2	12.70	27/32	21.43	1	1	7/32	5.56	7/32	5.56	1 1/4	31.75

www.globaltungsten.com

B		E		D		M	A	L		T		C	
inch	mm	inch	mm	inch	mm	inch	inch	inch	mm	inch	mm	inch	mm
1/2	12.70	1/2	12.70	21/32	16.67	1	1	7/32	5.56	7/32	5.56	1 1/4	31.75
1/2	12.70	1/2	12.70	11/16	17.46	1	1	7/32	5.56	7/32	5.56	1 1/4	31.75
1/2	12.70	1/2	12.70	23/32	18.26	1	1	7/32	5.56	7/32	5.56	1 1/4	31.75
1/2	12.70	1/2	12.70	3/4	19.05	1	1	7/32	5.56	7/32	5.56	1 1/4	31.75
1/2	12.70	1/2	12.70	25/32	19.84	1	1	7/32	5.56	7/32	5.56	1 1/4	31.75
1/2	12.70	1/2	12.70	13/16	20.64	1	1	7/32	5.56	7/32	5.56	1 1/4	31.75
1/2	12.70	1/2	12.70	27/32	21.43	1	1	7/32	5.56	7/32	5.56	1 1/4	31.75
3/16	4.76	3/8	9.52	19/32	15.08	1	1	7/32	5.56	7/32	5.56	1 1/4	31.75
3/16	4.76	3/8	9.52	5/8	15.87	1	1	7/32	5.56	7/32	5.56	1 1/4	31.75
3/16	4.76	3/8	9.52	21/32	16.67	1	1	7/32	5.56	7/32	5.56	1 1/4	31.75
3/16	4.76	3/8	9.52	11/16	17.46	1	1	7/32	5.56	7/32	5.56	1 1/4	31.75
3/16	4.76	3/8	9.52	23/32	18.26	1	1	7/32	5.56	7/32	5.56	1 1/4	31.75
3/16	4.76	3/8	9.52	3/4	19.05	1	1	7/32	5.56	7/32	5.56	1 1/4	31.75
3/16	4.76	3/8	9.52	25/32	19.84	1	1	7/32	5.56	7/32	5.56	1 1/4	31.75
3/16	4.76	3/8	9.52	13/16	20.64	1	1	7/32	5.56	7/32	5.56	1 1/4	31.75
3/16	4.76	3/8	9.52	27/32	21.43	1	1	7/32	5.56	7/32	5.56	1 1/4	31.75
7/32	5.56	3/8	9.52	19/32	15.08	1	1	7/32	5.56	7/32	5.56	1 1/4	31.75
7/32	5.56	3/8	9.52	5/8	15.87	1	1	7/32	5.56	7/32	5.56	1 1/4	31.75
7/32	5.56	3/8	9.52	21/32	16.67	1	1	7/32	5.56	7/32	5.56	1 1/4	31.75
7/32	5.56	3/8	9.52	11/16	17.46	1	1	7/32	5.56	7/32	5.56	1 1/4	31.75
7/32	5.56	3/8	9.52	23/32	18.26	1	1	7/32	5.56	7/32	5.56	1 1/4	31.75
7/32	5.56	3/8	9.52	3/4	19.05	1	1	7/32	5.56	7/32	5.56	1 1/4	31.75
7/32	5.56	3/8	9.52	25/32	19.84	1	1	7/32	5.56	7/32	5.56	1 1/4	31.75
7/32	5.56	3/8	9.52	13/16	20.64	1	1	7/32	5.56	7/32	5.56	1 1/4	31.75
7/32	5.56	3/8	9.52	27/32	21.43	1	1	7/32	5.56	7/32	5.56	1 1/4	31.75
1/4	6.35	3/8	9.52	19/32	15.08	1	1	7/32	5.56	7/32	5.56	1 1/4	31.75
1/4	6.35	3/8	9.52	5/8	15.87	1	1	7/32	5.56	7/32	5.56	1 1/4	31.75
1/4	6.35	3/8	9.52	21/32	16.67	1	1	7/32	5.56	7/32	5.56	1 1/4	31.75
1/4	6.35	3/8	9.52	11/16	17.46	1	1	7/32	5.56	7/32	5.56	1 1/4	31.75
1/4	6.35	3/8	9.52	23/32	18.26	1	1	7/32	5.56	7/32	5.56	1 1/4	31.75
1/4	6.35	3/8	9.52	3/4	19.05	1	1	7/32	5.56	7/32	5.56	1 1/4	31.75
1/4	6.35	3/8	9.52	25/32	19.84	1	1	7/32	5.56	7/32	5.56	1 1/4	31.75
1/4	6.35	3/8	9.52	13/16	20.64	1	1	7/32	5.56	7/32	5.56	1 1/4	31.75
1/4	6.35	3/8	9.52	27/32	21.43	1	1	7/32	5.56	7/32	5.56	1 1/4	31.75
9/32	7.14	3/8	9.52	19/32	15.08	1	1	7/32	5.56	7/32	5.56	1 1/4	31.75
9/32	7.14	3/8	9.52	5/8	15.87	1	1	7/32	5.56	7/32	5.56	1 1/4	31.75
9/32	7.14	3/8	9.52	21/32	16.67	1	1	7/32	5.56	7/32	5.56	1 1/4	31.75
9/32	7.14	3/8	9.52	11/16	17.46	1	1	7/32	5.56	7/32	5.56	1 1/4	31.75
9/32	7.14	3/8	9.52	23/32	18.26	1	1	7/32	5.56	7/32	5.56	1 1/4	31.75
9/32	7.14	3/8	9.52	3/4	19.05	1	1	7/32	5.56	7/32	5.56	1 1/4	31.75
9/32	7.14	3/8	9.52	25/32	19.84	1	1	7/32	5.56	7/32	5.56	1 1/4	31.75
9/32	7.14	3/8	9.52	13/16	20.64	1	1	7/32	5.56	7/32	5.56	1 1/4	31.75
9/32	7.14	3/8	9.52	27/32	21.43	1	1	7/32	5.56	7/32	5.56	1 1/4	31.75
5/16	7.94	3/8	9.52	19/32	15.08	1	1	7/32	5.56	7/32	5.56	1 1/4	31.75
5/16	7.94	3/8	9.52	5/8	15.87	1	1	7/32	5.56	7/32	5.56	1 1/4	31.75

www.globaltungsters.com

B		E		D		M	A	L		T		C	
inch	mm	inch	mm	inch	mm	inch	inch	inch	mm	inch	mm	inch	mm
5/16	7.94	3/8	9.52	21/32	16.67	1	1	7/32	5.56	7/32	5.56	1 1/4	31.75
5/16	7.94	3/8	9.52	11/16	17.46	1	1	7/32	5.56	7/32	5.56	1 1/4	31.75
5/16	7.94	3/8	9.52	23/32	18.26	1	1	7/32	5.56	7/32	5.56	1 1/4	31.75
5/16	7.94	3/8	9.52	3/4	19.05	1	1	7/32	5.56	7/32	5.56	1 1/4	31.75
5/16	7.94	3/8	9.52	25/32	19.84	1	1	7/32	5.56	7/32	5.56	1 1/4	31.75
5/16	7.94	3/8	9.52	13/16	20.64	1	1	7/32	5.56	7/32	5.56	1 1/4	31.75
5/16	7.94	3/8	9.52	27/32	21.43	1	1	7/32	5.56	7/32	5.56	1 1/4	31.75
11/32	8.73	3/8	9.52	19/32	15.08	1	1	7/32	5.56	7/32	5.56	1 1/4	31.75
11/32	8.73	3/8	9.52	5/8	15.87	1	1	7/32	5.56	7/32	5.56	1 1/4	31.75
11/32	8.73	3/8	9.52	21/32	16.67	1	1	7/32	5.56	7/32	5.56	1 1/4	31.75
11/32	8.73	3/8	9.52	11/16	17.46	1	1	7/32	5.56	7/32	5.56	1 1/4	31.75
11/32	8.73	3/8	9.52	23/32	18.26	1	1	7/32	5.56	7/32	5.56	1 1/4	31.75
11/32	8.73	3/8	9.52	3/4	19.05	1	1	7/32	5.56	7/32	5.56	1 1/4	31.75
11/32	8.73	3/8	9.52	25/32	19.84	1	1	7/32	5.56	7/32	5.56	1 1/4	31.75
11/32	8.73	3/8	9.52	13/16	20.64	1	1	7/32	5.56	7/32	5.56	1 1/4	31.75
11/32	8.73	3/8	9.52	27/32	21.43	1	1	7/32	5.56	7/32	5.56	1 1/4	31.75
3/8	9.52	3/8	9.52	19/32	15.08	1	1	7/32	5.56	7/32	5.56	1 1/4	31.75
3/8	9.52	3/8	9.52	5/8	15.87	1	1	7/32	5.56	7/32	5.56	1 1/4	31.75
3/8	9.52	3/8	9.52	21/32	16.67	1	1	7/32	5.56	7/32	5.56	1 1/4	31.75
3/8	9.52	3/8	9.52	11/16	17.46	1	1	7/32	5.56	7/32	5.56	1 1/4	31.75
3/8	9.52	3/8	9.52	23/32	18.26	1	1	7/32	5.56	7/32	5.56	1 1/4	31.75
3/8	9.52	3/8	9.52	3/4	19.05	1	1	7/32	5.56	7/32	5.56	1 1/4	31.75
3/8	9.52	3/8	9.52	25/32	19.84	1	1	7/32	5.56	7/32	5.56	1 1/4	31.75
3/8	9.52	3/8	9.52	13/16	20.64	1	1	7/32	5.56	7/32	5.56	1 1/4	31.75
3/8	9.52	3/8	9.52	27/32	21.43	1	1	7/32	5.56	7/32	5.56	1 1/4	31.75
3/16	4.76	1/2	12.70	21/32	16.67	7/8	7/8	7/32	5.56	7/32	5.56	1 1/8	28.57
3/16	4.76	1/2	12.70	11/16	17.46	7/8	7/8	7/32	5.56	7/32	5.56	1 1/8	28.57
3/16	4.76	1/2	12.70	23/32	18.26	7/8	7/8	7/32	5.56	7/32	5.56	1 1/8	28.57
3/16	4.76	1/2	12.70	3/4	19.05	7/8	7/8	7/32	5.56	7/32	5.56	1 1/8	28.57
7/32	5.56	1/2	12.70	21/32	16.67	7/8	7/8	7/32	5.56	7/32	5.56	1 1/8	28.57
7/32	5.56	1/2	12.70	11/16	17.46	7/8	7/8	7/32	5.56	7/32	5.56	1 1/8	28.57
7/32	5.56	1/2	12.70	23/32	18.26	7/8	7/8	7/32	5.56	7/32	5.56	1 1/8	28.57
7/32	5.56	1/2	12.70	3/4	19.05	7/8	7/8	7/32	5.56	7/32	5.56	1 1/8	28.57
1/4	6.35	1/2	12.70	21/32	16.67	7/8	7/8	7/32	5.56	7/32	5.56	1 1/8	28.57
1/4	6.35	1/2	12.70	11/16	17.46	7/8	7/8	7/32	5.56	7/32	5.56	1 1/8	28.57
1/4	6.35	1/2	12.70	23/32	18.26	7/8	7/8	7/32	5.56	7/32	5.56	1 1/8	28.57
1/4	6.35	1/2	12.70	3/4	19.05	7/8	7/8	7/32	5.56	7/32	5.56	1 1/8	28.57
9/32	7.14	1/2	12.70	21/32	16.67	7/8	7/8	7/32	5.56	7/32	5.56	1 1/8	28.57
9/32	7.14	1/2	12.70	11/16	17.46	7/8	7/8	7/32	5.56	7/32	5.56	1 1/8	28.57
9/32	7.14	1/2	12.70	23/32	18.26	7/8	7/8	7/32	5.56	7/32	5.56	1 1/8	28.57
9/32	7.14	1/2	12.70	3/4	19.05	7/8	7/8	7/32	5.56	7/32	5.56	1 1/8	28.57
5/16	7.94	1/2	12.70	21/32	16.67	7/8	7/8	7/32	5.56	7/32	5.56	1 1/8	28.57
5/16	7.94	1/2	12.70	11/16	17.46	7/8	7/8	7/32	5.56	7/32	5.56	1 1/8	28.57
5/16	7.94	1/2	12.70	23/32	18.26	7/8	7/8	7/32	5.56	7/32	5.56	1 1/8	28.57
5/16	7.94	1/2	12.70	3/4	19.05	7/8	7/8	7/32	5.56	7/32	5.56	1 1/8	28.57

www.globaltungsten.com

B		E		D		M	A	L		T		C	
inch	mm	inch	mm	inch	mm	inch	inch	inch	mm	inch	mm	inch	mm
11/32	8.73	1/2	12.70	21/32	16.67	7/8	7/8	7/32	5.56	7/32	5.56	1 1/8	28.57
11/32	8.73	1/2	12.70	11/16	17.46	7/8	7/8	7/32	5.56	7/32	5.56	1 1/8	28.57
11/32	8.73	1/2	12.70	23/32	18.26	7/8	7/8	7/32	5.56	7/32	5.56	1 1/8	28.57
11/32	8.73	1/2	12.70	3/4	19.05	7/8	7/8	7/32	5.56	7/32	5.56	1 1/8	28.57
3/8	9.52	1/2	12.70	21/32	16.67	7/8	7/8	7/32	5.56	7/32	5.56	1 1/8	28.57
3/8	9.52	1/2	12.70	11/16	17.46	7/8	7/8	7/32	5.56	7/32	5.56	1 1/8	28.57
3/8	9.52	1/2	12.70	23/32	18.26	7/8	7/8	7/32	5.56	7/32	5.56	1 1/8	28.57
3/8	9.52	1/2	12.70	3/4	19.05	7/8	7/8	7/32	5.56	7/32	5.56	1 1/8	28.57
13/32	10.32	1/2	12.70	21/32	16.67	7/8	7/8	7/32	5.56	7/32	5.56	1 1/8	28.57
13/32	10.32	1/2	12.70	11/16	17.46	7/8	7/8	7/32	5.56	7/32	5.56	1 1/8	28.57
13/32	10.32	1/2	12.70	23/32	18.26	7/8	7/8	7/32	5.56	7/32	5.56	1 1/8	28.57
13/32	10.32	1/2	12.70	3/4	19.05	7/8	7/8	7/32	5.56	7/32	5.56	1 1/8	28.57
7/16	11.11	1/2	12.70	21/32	16.67	7/8	7/8	7/32	5.56	7/32	5.56	1 1/8	28.57
7/16	11.11	1/2	12.70	11/16	17.46	7/8	7/8	7/32	5.56	7/32	5.56	1 1/8	28.57
7/16	11.11	1/2	12.70	23/32	18.26	7/8	7/8	7/32	5.56	7/32	5.56	1 1/8	28.57
7/16	11.11	1/2	12.70	3/4	19.05	7/8	7/8	7/32	5.56	7/32	5.56	1 1/8	28.57
15/32	11.91	1/2	12.70	21/32	16.67	7/8	7/8	7/32	5.56	7/32	5.56	1 1/8	28.57
15/32	11.91	1/2	12.70	11/16	17.46	7/8	7/8	7/32	5.56	7/32	5.56	1 1/8	28.57
15/32	11.91	1/2	12.70	23/32	18.26	7/8	7/8	7/32	5.56	7/32	5.56	1 1/8	28.57
15/32	11.91	1/2	12.70	3/4	19.05	7/8	7/8	7/32	5.56	7/32	5.56	1 1/8	28.57
1/2	12.70	1/2	12.70	21/32	16.67	7/8	7/8	7/32	5.56	7/32	5.56	1 1/8	28.57
1/2	12.70	1/2	12.70	11/16	17.46	7/8	7/8	7/32	5.56	7/32	5.56	1 1/8	28.57
1/2	12.70	1/2	12.70	23/32	18.26	7/8	7/8	7/32	5.56	7/32	5.56	1 1/8	28.57
1/2	12.70	1/2	12.70	3/4	19.05	7/8	7/8	7/32	5.56	7/32	5.56	1 1/8	28.57
3/16	4.76	3/8	9.52	19/32	15.08	7/8	7/8	7/32	5.56	7/32	5.56	1 1/8	28.57
3/16	4.76	3/8	9.52	5/8	15.87	7/8	7/8	7/32	5.56	7/32	5.56	1 1/8	28.57
3/16	4.76	3/8	9.52	21/32	16.67	7/8	7/8	7/32	5.56	7/32	5.56	1 1/8	28.57
3/16	4.76	3/8	9.52	11/16	17.46	7/8	7/8	7/32	5.56	7/32	5.56	1 1/8	28.57
3/16	4.76	3/8	9.52	23/32	18.26	7/8	7/8	7/32	5.56	7/32	5.56	1 1/8	28.57
3/16	4.76	3/8	9.52	3/4	19.05	7/8	7/8	7/32	5.56	7/32	5.56	1 1/8	28.57
7/32	5.56	3/8	9.52	19/32	15.08	7/8	7/8	7/32	5.56	7/32	5.56	1 1/8	28.57
7/32	5.56	3/8	9.52	5/8	15.87	7/8	7/8	7/32	5.56	7/32	5.56	1 1/8	28.57
7/32	5.56	3/8	9.52	21/32	16.67	7/8	7/8	7/32	5.56	7/32	5.56	1 1/8	28.57
7/32	5.56	3/8	9.52	11/16	17.46	7/8	7/8	7/32	5.56	7/32	5.56	1 1/8	28.57
7/32	5.56	3/8	9.52	23/32	18.26	7/8	7/8	7/32	5.56	7/32	5.56	1 1/8	28.57
7/32	5.56	3/8	9.52	3/4	19.05	7/8	7/8	7/32	5.56	7/32	5.56	1 1/8	28.57
1/4	6.35	3/8	9.52	19/32	15.08	7/8	7/8	7/32	5.56	7/32	5.56	1 1/8	28.57
1/4	6.35	3/8	9.52	5/8	15.87	7/8	7/8	7/32	5.56	7/32	5.56	1 1/8	28.57
1/4	6.35	3/8	9.52	21/32	16.67	7/8	7/8	7/32	5.56	7/32	5.56	1 1/8	28.57
1/4	6.35	3/8	9.52	11/16	17.46	7/8	7/8	7/32	5.56	7/32	5.56	1 1/8	28.57
1/4	6.35	3/8	9.52	23/32	18.26	7/8	7/8	7/32	5.56	7/32	5.56	1 1/8	28.57
1/4	6.35	3/8	9.52	3/4	19.05	7/8	7/8	7/32	5.56	7/32	5.56	1 1/8	28.57
9/32	7.14	3/8	9.52	19/32	15.08	7/8	7/8	7/32	5.56	7/32	5.56	1 1/8	28.57
9/32	7.14	3/8	9.52	5/8	15.87	7/8	7/8	7/32	5.56	7/32	5.56	1 1/8	28.57
9/32	7.14	3/8	9.52	21/32	16.67	7/8	7/8	7/32	5.56	7/32	5.56	1 1/8	28.57

www.globaltungsten.com

B		E		D		M	A	L		T		C	
inch	mm	inch	mm	inch	mm	inch	inch	inch	mm	inch	mm	inch	mm
9/32	7.14	3/8	9.52	11/16	17.46	7/8	7/8	7/32	5.56	7/32	5.56	1 1/8	28.57
9/32	7.14	3/8	9.52	23/32	18.26	7/8	7/8	7/32	5.56	7/32	5.56	1 1/8	28.57
9/32	7.14	3/8	9.52	3/4	19.05	7/8	7/8	7/32	5.56	7/32	5.56	1 1/8	28.57
5/16	7.94	3/8	9.52	19/32	15.08	7/8	7/8	7/32	5.56	7/32	5.56	1 1/8	28.57
5/16	7.94	3/8	9.52	5/8	15.87	7/8	7/8	7/32	5.56	7/32	5.56	1 1/8	28.57
5/16	7.94	3/8	9.52	21/32	16.67	7/8	7/8	7/32	5.56	7/32	5.56	1 1/8	28.57
5/16	7.94	3/8	9.52	11/16	17.46	7/8	7/8	7/32	5.56	7/32	5.56	1 1/8	28.57
5/16	7.94	3/8	9.52	23/32	18.26	7/8	7/8	7/32	5.56	7/32	5.56	1 1/8	28.57
5/16	7.94	3/8	9.52	3/4	19.05	7/8	7/8	7/32	5.56	7/32	5.56	1 1/8	28.57
11/32	8.73	3/8	9.52	19/32	15.08	7/8	7/8	7/32	5.56	7/32	5.56	1 1/8	28.57
11/32	8.73	3/8	9.52	5/8	15.87	7/8	7/8	7/32	5.56	7/32	5.56	1 1/8	28.57
11/32	8.73	3/8	9.52	21/32	16.67	7/8	7/8	7/32	5.56	7/32	5.56	1 1/8	28.57
11/32	8.73	3/8	9.52	11/16	17.46	7/8	7/8	7/32	5.56	7/32	5.56	1 1/8	28.57
11/32	8.73	3/8	9.52	23/32	18.26	7/8	7/8	7/32	5.56	7/32	5.56	1 1/8	28.57
11/32	8.73	3/8	9.52	3/4	19.05	7/8	7/8	7/32	5.56	7/32	5.56	1 1/8	28.57
3/8	9.52	3/8	9.52	19/32	15.08	7/8	7/8	7/32	5.56	7/32	5.56	1 1/8	28.57
3/8	9.52	3/8	9.52	5/8	15.87	7/8	7/8	7/32	5.56	7/32	5.56	1 1/8	28.57
3/8	9.52	3/8	9.52	21/32	16.67	7/8	7/8	7/32	5.56	7/32	5.56	1 1/8	28.57
3/8	9.52	3/8	9.52	11/16	17.46	7/8	7/8	7/32	5.56	7/32	5.56	1 1/8	28.57
3/8	9.52	3/8	9.52	23/32	18.26	7/8	7/8	7/32	5.56	7/32	5.56	1 1/8	28.57
3/8	9.52	3/8	9.52	3/4	19.05	7/8	7/8	7/32	5.56	7/32	5.56	1 1/8	28.57
3/16	4.76	3/8	9.52	19/32	15.08	3/4	3/4	7/32	5.56	7/32	5.56	1	24.40
3/16	4.76	3/8	9.52	5/8	15.87	3/4	3/4	7/32	5.56	7/32	5.56	1	24.40
7/32	5.56	3/8	9.52	19/32	15.08	3/4	3/4	7/32	5.56	7/32	5.56	1	24.40
7/32	5.56	3/8	9.52	5/8	15.87	3/4	3/4	7/32	5.56	7/32	5.56	1	24.40
1/4	6.35	3/8	9.52	19/32	15.08	3/4	3/4	7/32	5.56	7/32	5.56	1	24.40
1/4	6.35	3/8	9.52	5/8	15.87	3/4	3/4	7/32	5.56	7/32	5.56	1	24.40
9/32	7.14	3/8	9.52	19/32	15.08	3/4	3/4	7/32	5.56	7/32	5.56	1	24.40
9/32	7.14	3/8	9.52	5/8	15.87	3/4	3/4	7/32	5.56	7/32	5.56	1	24.40
5/16	7.94	3/8	9.52	19/32	15.08	3/4	3/4	7/32	5.56	7/32	5.56	1	24.40
5/16	7.94	3/8	9.52	5/8	15.87	3/4	3/4	7/32	5.56	7/32	5.56	1	24.40
11/32	8.73	3/8	9.52	19/32	15.08	3/4	3/4	7/32	5.56	7/32	5.56	1	24.40
11/32	8.73	3/8	9.52	5/8	15.87	3/4	3/4	7/32	5.56	7/32	5.56	1	24.40
3/8	9.52	3/8	9.52	19/32	15.08	3/4	3/4	7/32	5.56	7/32	5.56	1	24.40
3/8	9.52	3/8	9.52	5/8	15.87	3/4	3/4	7/32	5.56	7/32	5.56	1	24.40

www.globaltungsters.com

Sapphire Crystal Growth Furnace

The advert of sapphire growth has made it possible for people to light up the world.through being developed for more than half a century,Al2O3 crystal has evolved into core seed of sapphire growing. It exerts the broadest and deepest influence on light industry,national defence industry,aeronautics and astronautics etc and also provided strong guarantee for rapid development of LED industry in recent years.For sapphire growth process,the important vital factor to success is the life time (sustainability) of sapphire crystal growth furnace. Nevertheless,tungsten and molybdenum materials play a significant role in sapphire crystal growth furnace.

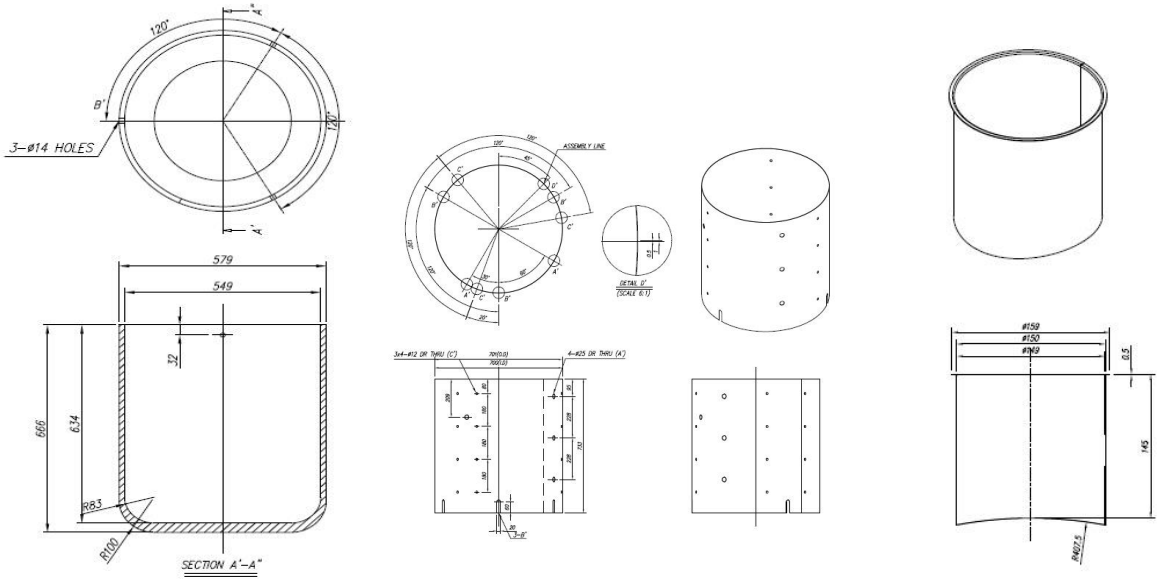

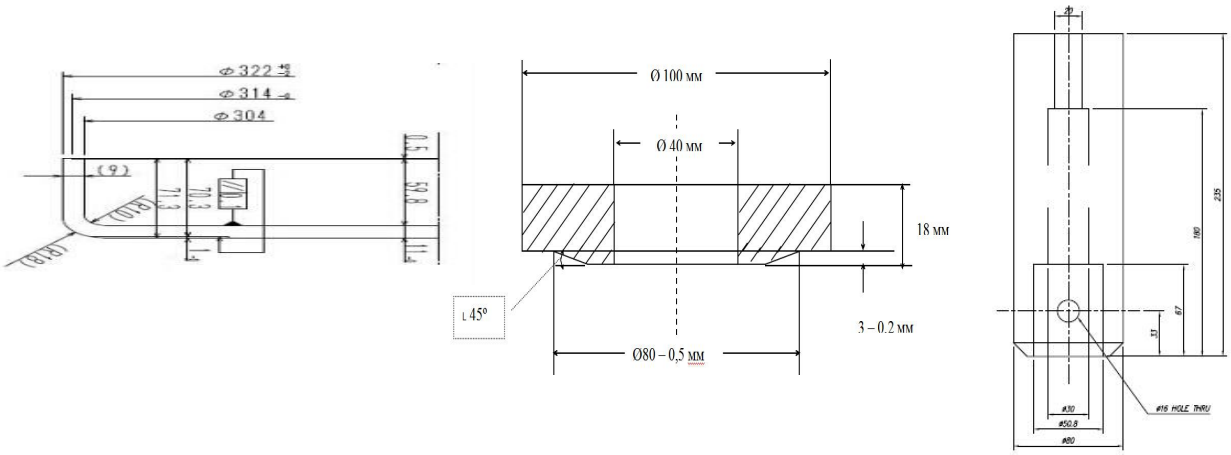

WELSON

www.globaltungstens.com

Development of powder metallurgy process

Powder metallurgy materials and products	Time
Sponge iron	BC1000
Filament of bulbs	1909
Refractory carbides	1900-1904
Electrical contact materials	1917-1920
WC-Co cemented carbide	1923-1925
Sintered friction materials	1929
Porous bronze bearing	1921-1932
WC-TiC-Co cemented carbide	1929-1932
Sintered magnet	1936
Powdiron bearing	1936
Alloy steel machine parts	1936-1946
Sintered aluminium	1946
TiC-Ni	1949
Steel based carbide	1957
PMHSS	1968
W functional materials	Now

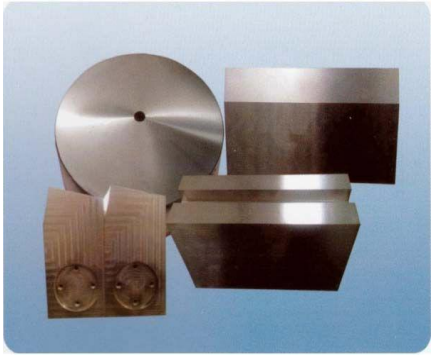

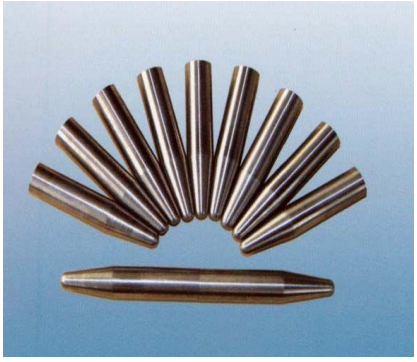

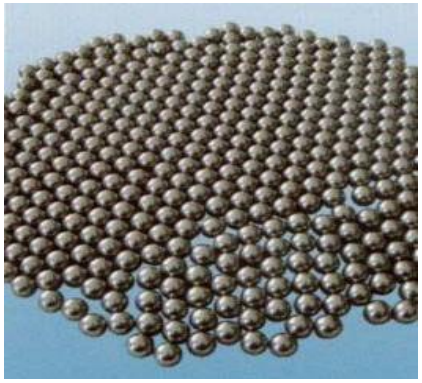

TUNGSTEN MATERIALS

WEISON

Contacts/offices:

ZHUZHOU WEISON ADVANCED MATERIALS CO.,LTD

No.8 Dahan Huipu Industrial Park,Tianyuan District Zhuzhou,Hunan 412000

Phone:86 (0)731 22105289

Fax:86 (0)731 22737718

E-mail:sales@globaltungstens.com

http://www.globaltungstens.com