VeloSpire
Mattress Vacuum Cleaner

Model: C028Max-1

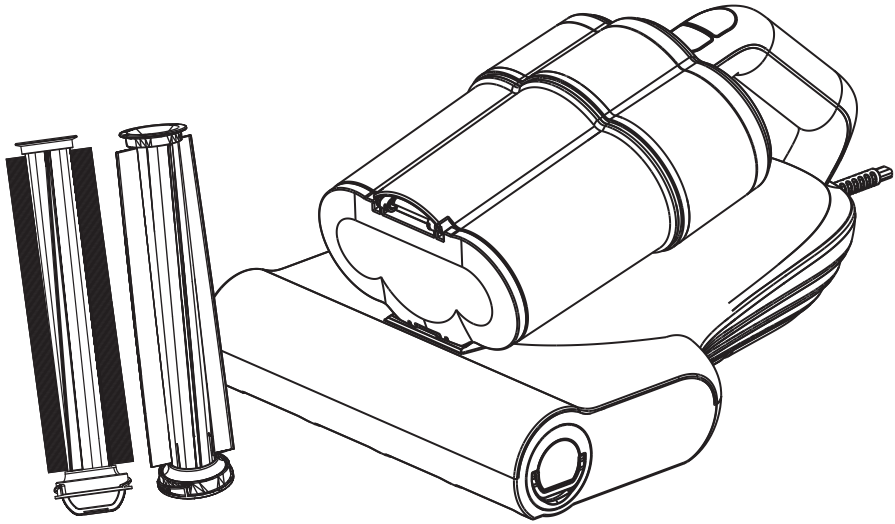

- 1 Press Dust Disposal
- Air-Dust Separation Technology
- Large Dust Cup
- Compact and Easy to Use
- 2 Specialized Roller Brushes (for Household & Pet Hair)

Thank you for choosing VeloSpire. To ensure optimal performance and safety, please read this manual thoroughly before using the product and retain it for future reference. For any inquiries, please contact us at:
support@velospire.net or VeloSpire@outlook.com

Index

Safety Precautions 1

Package Contents 2

Product Components 3

Operating Instructions 4

Cleaning and Maintenance 6

Machine Cleaning and Storage 9

Technical Specifications 10

Troubleshooting Guide 10

Warranty 12

Contact Us 12

support@velospire.net
VeloSpire@outlook.com

Safety Precautions

Special Note:
This product is not suitable for use by certain groups, such as children, persons with disabilities, individuals with mental illness, or those lacking experience and relevant knowledge, unless they are supervised and ensured to use it safely. Keep this product away from children and do not let them play with it.

Please follow the basic safety instructions below when using this product:

- Ultraviolet (UV) rays can harm the skin and eyes of humans and animals. Do not expose humans, plants, or animals to direct UV light.
- Perform a localized test on any item to be disinfected to avoid damaging UV-sensitive materials.
- Do not intentionally damage the roller at the bottom of the device (safety switch), as this could disable the UV lamp's protection function.
- Unplug the power cord before leaving the device unused or performing any maintenance.
- To reduce the risk of electric shock, do not use the device outdoors or on damp surfaces.
- Follow the instructions in this manual. Only use the functions recommended in this manual.
- This product is intended for general household use only. Do not use it for commercial or other purposes.
- Avoid vacuuming sharp or hard objects, such as glass shards or screws, or construction debris, to prevent damage to the machine.
- Do not use the power cord as a handle and do not pull the cord near sharp edges.

support@velospire.net
VeloSpire@outlook.com

Safety Precautions

- Do not place the machine on hot surfaces.
- Do not use the device if any air duct is blocked, as this may damage the motor.
- During storage, keep it away from dust, lint, hair, or any object that may clog or reduce airflow.
- Keep hair and clothing away from the machine's openings and moving parts.
- Always turn off the machine before unplugging the power cord.
- Do not vacuum any burning or smoking objects, such as cigarette butts, matches, or hot ashes.
- Do not operate the device without the dust cup or filter installed, as this may damage the motor.
- If the power cord is damaged and needs replacement, a qualified professional or allowed service personnel must replace it.
- Do not disassemble it yourself to avoid injury.

Package Contents

Part Name	Quantity
Main Unit	1
Instruction Manual (IM)	1
Fragrance Tablet	3
Pet Hair Roller Brush	1
Household Rubber Strip Brush	1

support@velospire.net
VeloSpire@outlook.com

Product Components

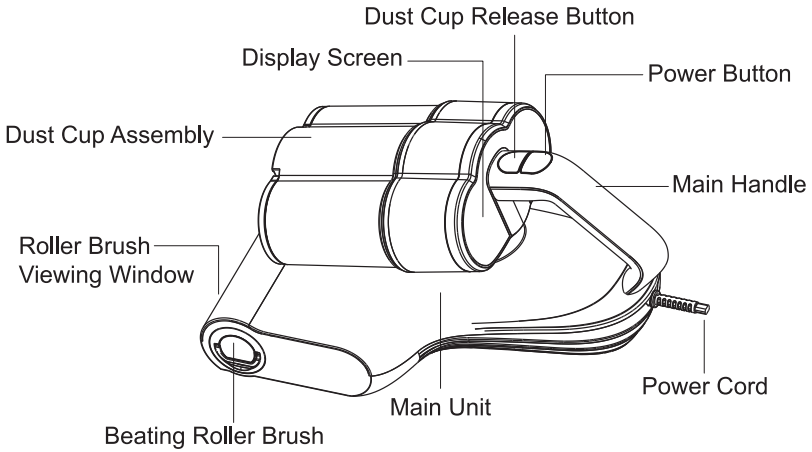

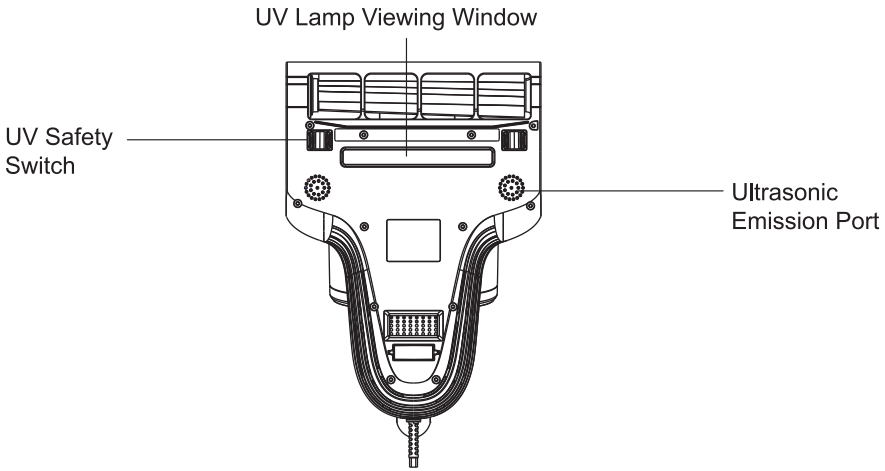

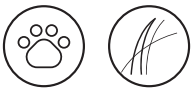

Pet Hair Roller Brush

Rubber strip and bristle combo penetrates fibers to effectively remove pet hair.

Household Roller Brush

High-quality PVC prevents tangling, ideal for carpets and mattresses.

support@velospire.net
VeloSpire@outlook.com

Operating Instructions

Special Note:
This machine features dual protection and anti-tilt functionality.When the unit is lifted too far from the surface,the Ultraviolet function will automatically stop. Ensure the machine remains at an appropriate height above the surface during use to maintain normal operation.
It is normal for both the UV light and ultrasonic function to stop working when the machine is lifted excessively.

1.Insert the power cord plug into the power socket.Press the power button gently to turn on the machine.The machine will begin operating.Before placing the machine on the working surface,the **Pat** function will activate briefly,and the **Heat** and **Ultrasonic** indicator lights willilluminate.
Once the machine is placed on a surface (such as a bed sheet or blanket),the **Ultraviolet** will light up,signaling the UV function is active.
When the machine is lifted,the UV function will automatically pause.
Press the power button again to turn off the device.

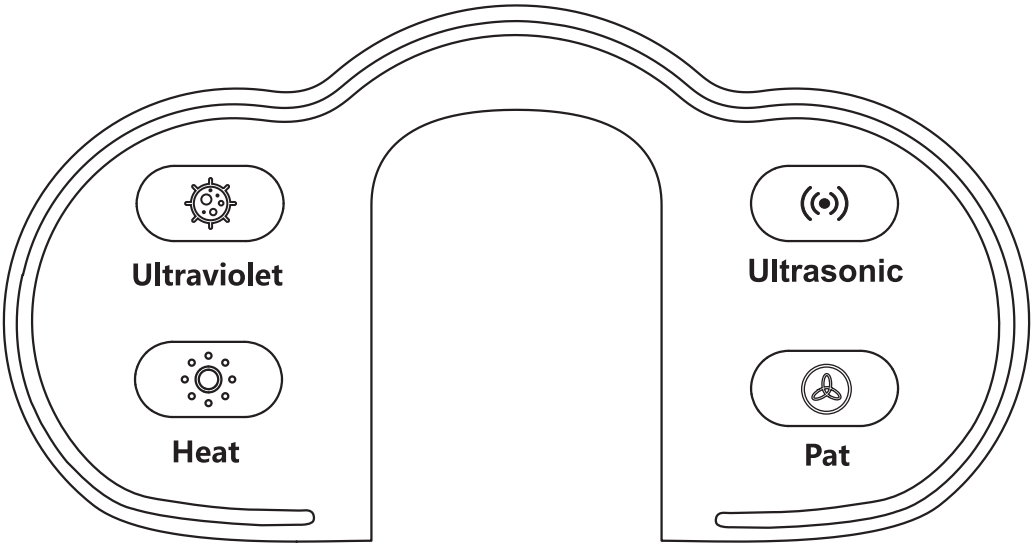

support@velospire.net
VeloSpire@outlook.com

Operating Instructions

2. Place the machine on the surface to be cleaned (e.g. mattress, sofa ,clothes, pet bed), and gently pushand pull the device back and forth to clean.For best results, move the vacuum at a speed of about 2 inches per second. Pass over each area 3 times for the best results.

   Featuring a three-cup cyclone filtration system, the side cups efficiently separate fine particles and exhaust air, while the central cup is equipped with a precision steel mesh to intercept microscopic dust. A single MIF filter cotton ensures final purification for clean exhaust. With 20,000Pa powerful suction, it delivers efficient dust mite separation and lasting cleaning performance.

3. A **fragrance tablet holder** is on the inner side of the dust cup lid. You may insert compatible **fragrance tablets** based on preference to keep the indoor environment fresh.
   To install or replace a **fragrance tablet**, follow the cleaning and maintenance instructions to separate the dust cup lip from the dust cup assembly. As shown in the diagram, **flip down the aroma cover**, insert the **fragrance tablet** (diameter: 18.5 mm / 0.73 inches, thickness: 6.5 mm / 0.26 inches), then **press to close the aroma cover**. Reinstall the lid onto the dust cup and place the dust cup back into the main unit.

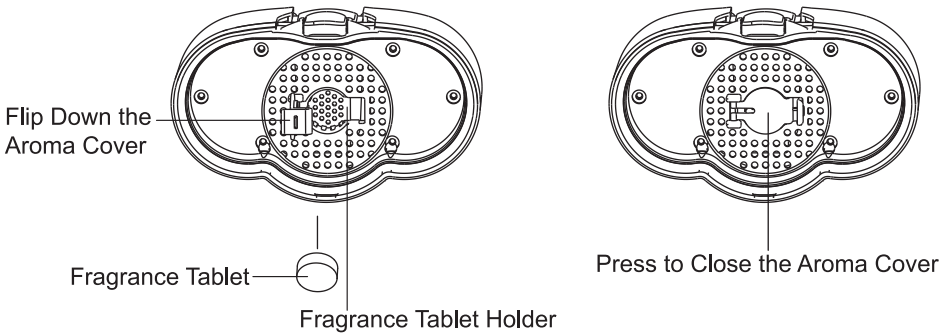

4. Using the Pet Hair Roller Brush. To use, insert the brush through the mounting hole on the shell and push inward until it clicks into place. Turn on the power and slowly glide the machine back and forth over pet beds, upholstered sofas, and other areas with concentrated pet hair to effectively loosen and remove embedded hair.

support@velospire.net
VeloSpire@outlook.com

Operating Instructions

After use, promptly clear any tangled debris from the brush to maintain optimal suction performance.

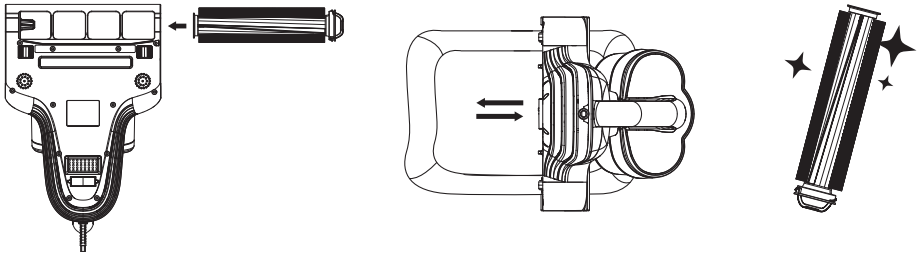

Cleaning and Maintenance

Special Note:
Dust mites trapped in lint may remain alive and continue to reproduce. To prevent secondary contamination, always empty the dust cup and clean both the dust cup assembly and the brush roller promptly. Follow the steps below:

1. Turn off the machine and unplug the power cord.
2. As shown in the diagram, press the **Dust Cup Release Button (A)**. The ejection mechanism will push the dust cup assembly upward. Then, hold the dust cup and rotate it toward arrow **B** while lifting it to remove the dust cup.

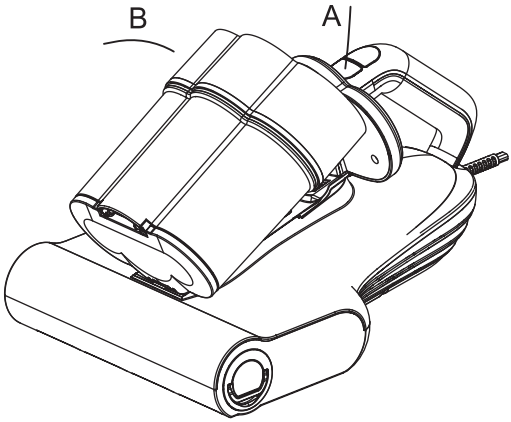

support@velospire.net
VeloSpire@outlook.com

Cleaning and Maintenance

3.One-Touch Dust Disposal:
Grip the dust cup and press the **Dust Cup Bottom Latch Button** as shown. The **dust cup bottom cover** will automatically open to release the dust.

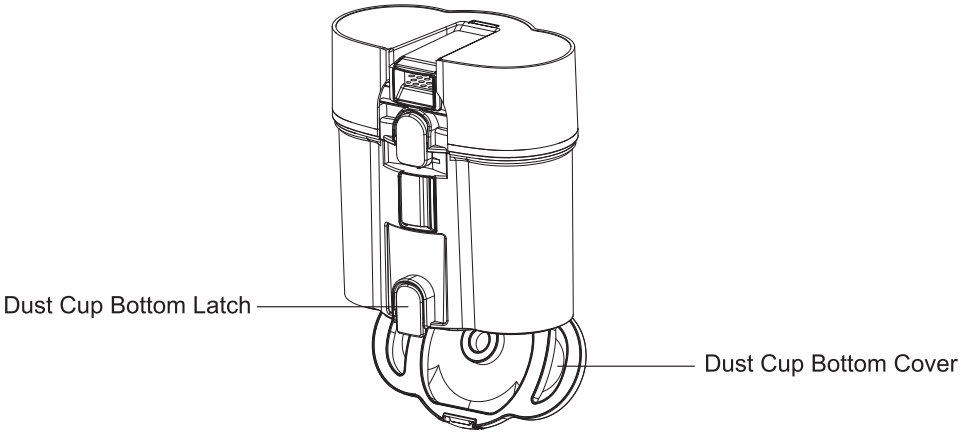

4.Cleaning and Replacing the Fine Filter Cotton: Press the **Dust Cup Lock Button** as shown to remove the **Upper Dust Cup Assembly**.
Then, take out the **Fine Filter Cotton** according to the diagram.
Rinse it with water and allow it to air dry completely before reinstalling.
Close the cover securely.

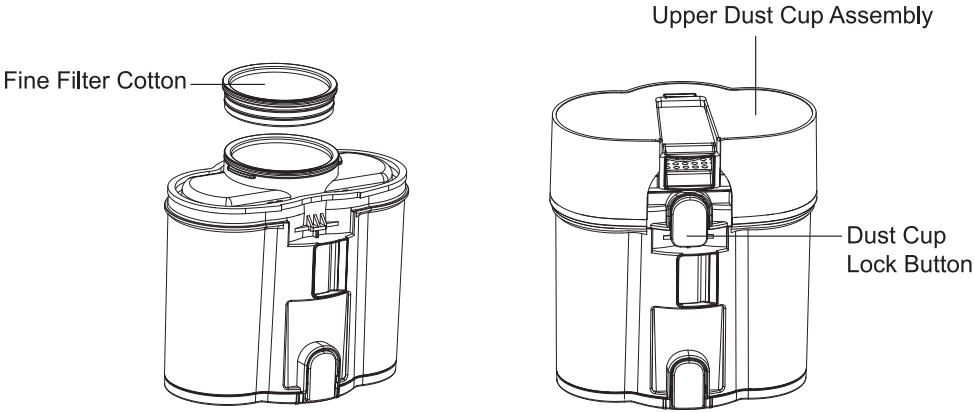

support@velospire.net
VeloSpire@outlook.com

Cleaning and Maintenance

5.**Clean Internal Dust Cup Components**: After removing the Upper Dust Cup Assembly, take out all showed components one by one. Rinse them with water, let them dry completely, and reinstall.

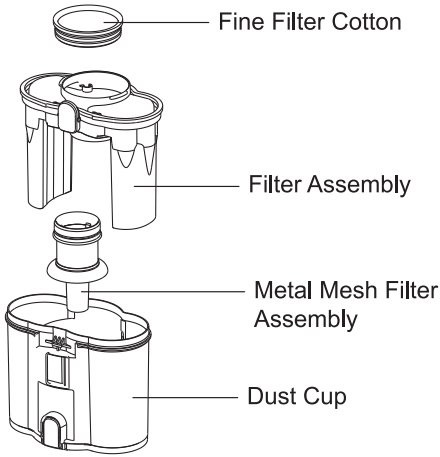

6.**Reinstall Dust Cup Components:** After all components are reassembled, install the Upper Dust Cup Assembly. Align the clip on the cover with the slots on the dust cup. Tilt and insert one side of the cover, then gradually press down the opposite side. Once fully in place, secure it by pressing the Dust Cup Lock Button.

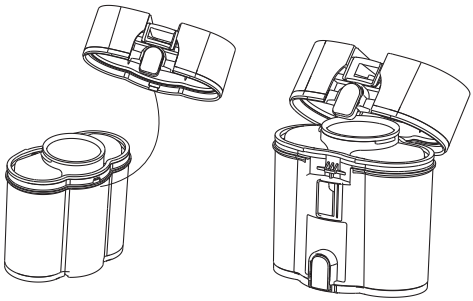

7.**Clean the Roller Brush Assembly:** Gently pull the small pull tab on the end of the roller brush as shown. Hold the tab and rinse the scraper strip with clean water. Allow it to air dry fully before reinstalling.
When reinstalling, align the roller with the guide rail inside the mounting slot and push it into the housing. A clear "click" sound confirms the roller is correctly seated. Both ends of the roller should be flush with the housing to complete installation.

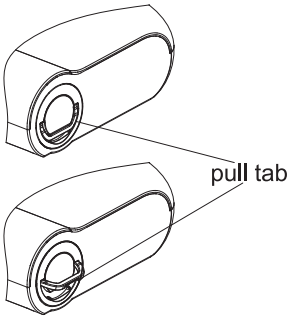

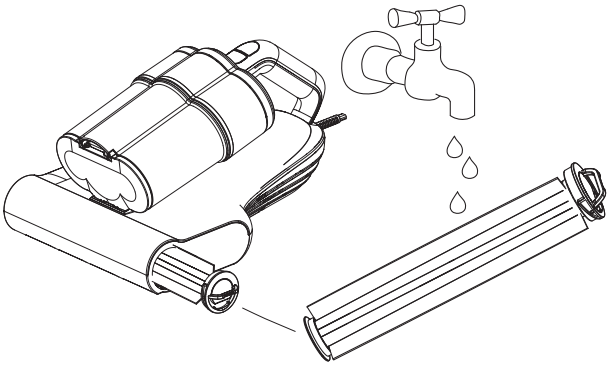

support@velospire.net
VeloSpire@outlook.com

Cleaning and Maintenance

8. **UV Lamp Cleaning Notice:** Before use, wipe the transparent cover of the UV lamp to ensure optimal sterilization. Do not look directly at the lamp while it is on and avoid exposing skin to direct UV light.

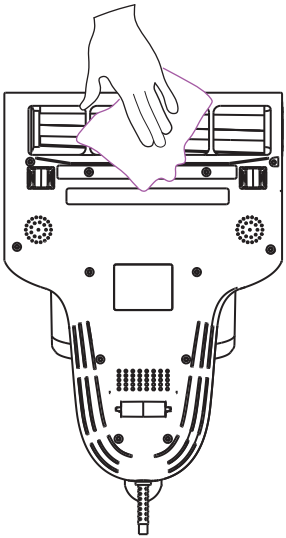

Machine Cleaning and Storage

1. Always unplug the machine before performing any maintenance.
2. Regularly empty the dust cup to avoid machine malfunctions.
3. Do not clean the machine's surface with gasoline or oily substances.
   Use a soft cloth with neutral detergent.
   Wring out the cloth thoroughly before wiping.
   Do not allow water to enter the internal electrical components.
4. Properly bundle the power cord and store it together with the machine.
5. Store the machine in a dry place.
6. Do not place heavy objects on top of the machine.
7. To prevent cross-contamination, do not use the Pet Hair Roller Brush on bedding or the Household Roller Brush on pet areas.

support@velospire.net
VeloSpire@outlook.com

Technical Specifications

Feature	Specification
Model	C028MAX-1
Rated Voltage	120 V ~60 Hz
Rated Power	650 W
Operation Radius	16.4 ft
Noise Level	≤78 dB
Vacuum Pressure	≥20 kPa
Dust Cup Capacity	0.3 L
Net Weight	4.19 lb
Main Unit Dimensions	11.61" × 8.66" × 7.17"
Certification	CE, FCC, ROHS, CB

Troubleshooting Guide

Note: If any of the following problems occur, please switch off the machine immediately to avoid damage or potential safety hazards.

Issue Description	Possible Cause	Solution
Unable to Power On	Power plug not fully inserted	Reinsert the plug and ensure it is securely connected.
	Power outlet has no electricity	Try a different power outlet.
Unusual operating noise	Dust cup is full or air duct is blocked	Remove and empty the dust cup; clean out any obstructions.

support@velospire.net
VeloSpire@outlook.com

Troubleshooting Guide

Issue Description	Possible Cause	Solution
Suction Power Reduced	Dust cup or filter is too dirty	Empty the dust cup and clean the filter assembly (including fine filter cotton).
	Unstable voltage	Wait until voltage stabilizes before continuing use.
Dust Blowing Out During Use	Filter inside the dust cup is damaged	Stop use immediately and replace the filter.
	Filter not properly installed	Do not use without the filter. Install filter correctly before operation.
UV Light Not Functioning	Safety switch (small roller) not in contact with the surface	The UV light only operates when the safety switch (small roller) is pressed against a surface.
Tapping Brush Not Working, Indicator Flashing	Roller brush jammed by hair or debris	Remove the roller and clean out tangled debris.
No Fragrance Emitted	Fragrance has fully evaporated or cartridge not inserted	Replace or reinstall the fragrance tablet.

support@velospire.net
VeloSpire@outlook.com

Warranty

This product is covered by a 1-year limited warranty from the date of purchase. The warranty does not cover damage from misuse, unauthorized modifications, or failure to follow instructions. Do not attempt self-repair. Contact our support team for assistance.

Contact Us

For any inquiries concerning our product, or if you wish to apply for a replacement or refund, please feel free to contact us via **support@velospire.net or VeloSpire@outlook.com**

support@velospire.net
VeloSpire@outlook.com